ENGINEERING TOMORROW

Operating Guide
VLT® AQUA Drive FC 202

355–800 kW, Enclosure Sizes E1h–E4h

vlt-drives.danfoss.com

Contents

1 Introduction

1.1 Purpose of the Manual

This operating guide provides information for safe installation and commissioning of the VLT® drives in an enclosure size E (E1h, E2h, E3h, and E4h).

The operating guide is intended for use by qualified personnel. To use the unit safely and professionally, read and follow this operating guide. Pay particular attention to the safety instructions and general warnings. Always keep the operating guide with the drive.

VLT® is a registered trademark.

1.2 Additional Resources

Other resources are available to understand advanced E1h–E4h drive functions and programming.

- The *VLT® AQUA Drive FC 202 Programming Guide* provides greater detail on working with parameters and aqua application examples.
- The *VLT® AQUA Drive FC 202, 110–1400 kW Design Guide* provides detailed capabilities and functionality to design motor control systems for aqua applications.
- The *Safe Torque Off Operating Guide*.

Supplementary publications and manuals are available from Danfoss. See *www.danfoss.com/en/search/?filter=type%3Adocumentation* for listings.

1.3 Manual and Software Version

This manual is regularly reviewed and updated. All suggestions for improvement are welcome. *Table 1.1* shows the version of the manual and the corresponding software version.

Manual version	Remarks	Software version
MG22A2xx	Added output contactor warning and other corrections.	2.70

Table 1.1 Manual and Software Version

1.4 Approvals and Certifications

Table 1.2 Approvals and Certifications

More approvals and certifications are available. Contact the local Danfoss office or partner. Drives of voltage T7 (525–690 V) are UL certified for only 525–690 V.

The drive complies with UL 61800-5-1 thermal memory retention requirements. For more information, refer to the section *Motor Thermal Protection* in the product-specific *design guide*.

NOTICE

IMPOSED LIMITATIONS ON THE OUTPUT FREQUENCY

From software version 1.99, the output frequency of the drive is limited to 590 Hz due to export control regulations.

1.4.1 Compliance with ADN

For compliance with the European Agreement concerning International Carriage of Dangerous Goods by Inland Waterways (ADN), refer to *ADN-compliant Installation* in the *design guide*.

1.5 Disposal

Do not dispose of equipment containing electrical components together with domestic waste.
Collect it separately in accordance with local and currently valid legislation.

2 Safety

2

2.1 Safety Symbols

The following symbols are used in this guide:

⚠WARNING

Indicates a potentially hazardous situation that could result in death or serious injury.

⚠CAUTION

Indicates a potentially hazardous situation that could result in minor or moderate injury. It can also be used to alert against unsafe practices.

NOTICE

Indicates important information, including situations that can result in damage to equipment or property.

2.2 Qualified Personnel

Correct and reliable transport, storage, installation, operation, and maintenance are required for the trouble-free and safe operation of the drive. Only qualified personnel are allowed to install or operate this equipment.

Qualified personnel are defined as trained staff, who are authorized to install, commission, and maintain equipment, systems, and circuits in accordance with pertinent laws and regulations. Also, the personnel must be familiar with the instructions and safety measures described in this manual.

2.3 Safety Precautions

⚠WARNING

HIGH VOLTAGE

Drives contain high voltage when connected to AC mains input, DC supply, load sharing, or permanent motors. Failure to use qualified personnel to install, start up, and maintain the drive can result in death or serious injury.

- **Only qualified personnel must install, start up, and maintain the drive.**

⚠WARNING

UNINTENDED START

When the drive is connected to the AC mains, DC supply, or load sharing, the motor can start at any time. Unintended start during programming, service, or repair work can result in death, serious injury, or property damage. The motor can start with an external switch, a fieldbus command, an input reference signal from the LCP or LOP, via remote operation using MCT 10 Set-up Software, or after a cleared fault condition.

To prevent unintended motor start:

- **Press [Off/Reset] on the LCP before programming parameters.**
- **Disconnect the drive from the mains.**
- **Completely wire and assemble the drive, motor, and any driven equipment before connecting the drive to the AC mains, DC supply, or load sharing.**

⚠WARNING

DISCHARGE TIME

The drive contains DC-link capacitors, which can remain charged even when the drive is not powered. High voltage can be present even when the warning LED indicator lights are off. Failure to wait 40 minutes after power has been removed before performing service or repair work can result in death or serious injury.

1. **Stop the motor.**
2. **Disconnect AC mains and remote DC-link supplies, including battery back-ups, UPS, and DC-link connections to other drives.**
3. **Disconnect or lock motor.**
4. **Wait 40 minutes for the capacitors to discharge fully.**
5. **Before performing any service or repair work, use an appropriate voltage measuring device to make sure that the capacitors are fully discharged.**

⚠WARNING

LEAKAGE CURRENT HAZARD

Leakage currents exceed 3.5 mA. Failure to ground the drive properly can result in death or serious injury.

- **Ensure the correct grounding of the equipment by a certified electrical installer.**

⚠WARNING

EQUIPMENT HAZARD

Contact with rotating shafts and electrical equipment can result in death or serious injury.

- **Ensure that only trained and qualified personnel install, start up, and maintain the drive.**
- **Ensure that electrical work conforms to national and local electrical codes.**
- **Follow the procedures in this guide.**

⚠CAUTION

HOT SURFACES

The drive contains metal components that are still hot even after the drive has been powered off. Failure to observe the high temperature symbol (yellow triangle) on the drive can result in serious burns.

- **Be aware that internal components, such as busbars, may be extremely hot even after the drive has been powered off.**
- **Exterior areas marked by the high temperature symbol (yellow triangle) are hot while the drive is in use and immediately after being powered off.**

⚠WARNING

INTERNAL FAILURE HAZARD

Under certain circumstances, an internal failure can cause a component to explode. Failure to keep the enclosure closed and properly secured can cause death or serious injury.

- **Do not operate the drive with the door open or panels off.**
- **Ensure that the enclosure is properly closed and secured during operation.**

NOTICE

MAINS SHIELD SAFETY OPTION

A mains shield option is available for enclosures with a protection rating of IP21/IP54 (Type 1/Type 12). The mains shield is a cover installed inside the enclosure to protect against the accidental touch of the power terminals, according to BGV A2, VBG 4.

3 Product Overview

3.1 Intended Use

The drive is an electronic motor controller that converts AC mains input into a variable AC waveform output. The frequency and voltage of the output are regulated to control the motor speed or torque. The drive is designed to:

- Regulate motor speed in response to system feedback or to remote commands from external controllers.
- Monitor system and motor status.
- Provide motor overload protection.

The drive is designed for industrial and commercial environments in accordance with local laws and standards. Depending on configuration, the drive can be used in standalone applications or form part of a larger system or installation.

NOTICE

In a residential environment, this product can cause radio interference, in which case supplementary mitigation measures can be required.

Foreseeable misuse

Do not use the drive in applications which are non-compliant with specified operating conditions and environments. Ensure compliance with the conditions specified in *chapter 9 Specifications*.

3.2 Power Ratings, Weights, and Dimensions

Table 3.1 provides dimensions for standard configurations. For dimensions on optional configurations, see *chapter 9.8 Enclosure Dimensions*.

Enclosure size	**E1h**	**E2h**	**E3h**	**E4h**
Rated power at 380–480 V [kW (hp)]	355–450 (500–600)	500–560 (650–750)	355–450 (500–600)	500–560 (650–750)
Rated power at 525–690 V [kW (hp)]	450–630 (450–650)	710–800 (750–950)	450–630 (450–650)	710–800 (750–950)
Enclosure protection rating	IP21/Type 1 IP54/Type 12	IP21/Type 1 IP54/Type 12	IP20/ Chassis	IP20/ Chassis
Unit dimensions				
Height [mm (in)]	2043 (80.4)	2043 (80.4)	1578 (62.1)	1578 (62.1)
Width [mm (in)]	602 (23.7)	698 (27.5)	506 (19.9)	604 (23.89)
Depth [mm (in)]	513 (20.2)	513 (20.2)	482 (19.0)	482 (19.0)
Weight [kg (lb)]	295 (650)	318 (700)	272 (600)	295 (650)
Shipping dimensions				
Height [mm (in)]	2191 (86.3)	2191 (86.3)	1759 (69.3)	1759 (69.3)
Width [mm (in)]	768 (30.2)	768 (30.2)	746 (29.4)	746 (29.4)
Depth [mm (in)]	870 (34.3)	870 (34.3)	794 (31.3)	794 (31.3)
Weight [kg (lb)]	–	–	–	–

Table 3.1 Enclosure Power Ratings and Dimensions

3.3 Interior View of Enclosures E1h and E2h

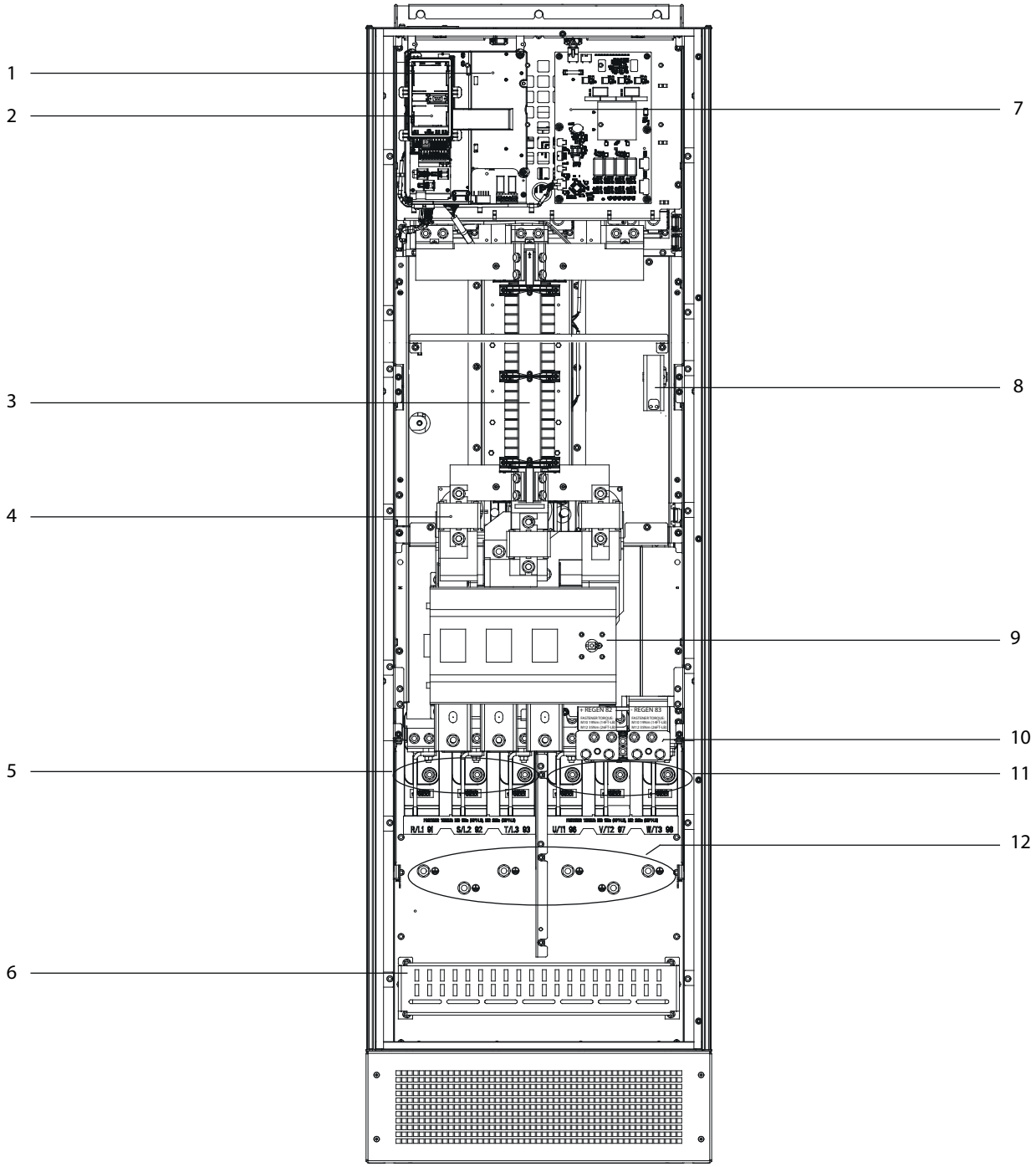

1	Control shelf (see *Illustration 3.3*)	7	Fan power card
2	Local control panel (LCP) cradle	8	Space heater (optional)
3	RFI filter (optional)	9	Mains disconnect (optional)
4	Mains fuses (required for UL compliance, but otherwise optional)	10	Brake/regeneration terminals (optional)
5	Mains terminals	11	Motor terminals
6	RFI shield termination	12	Ground terminals

Illustration 3.1 Interior View of Enclosure E1h (Enclosure E2h is Similar)

3

3.4 Interior View of Enclosures E3h and E4h

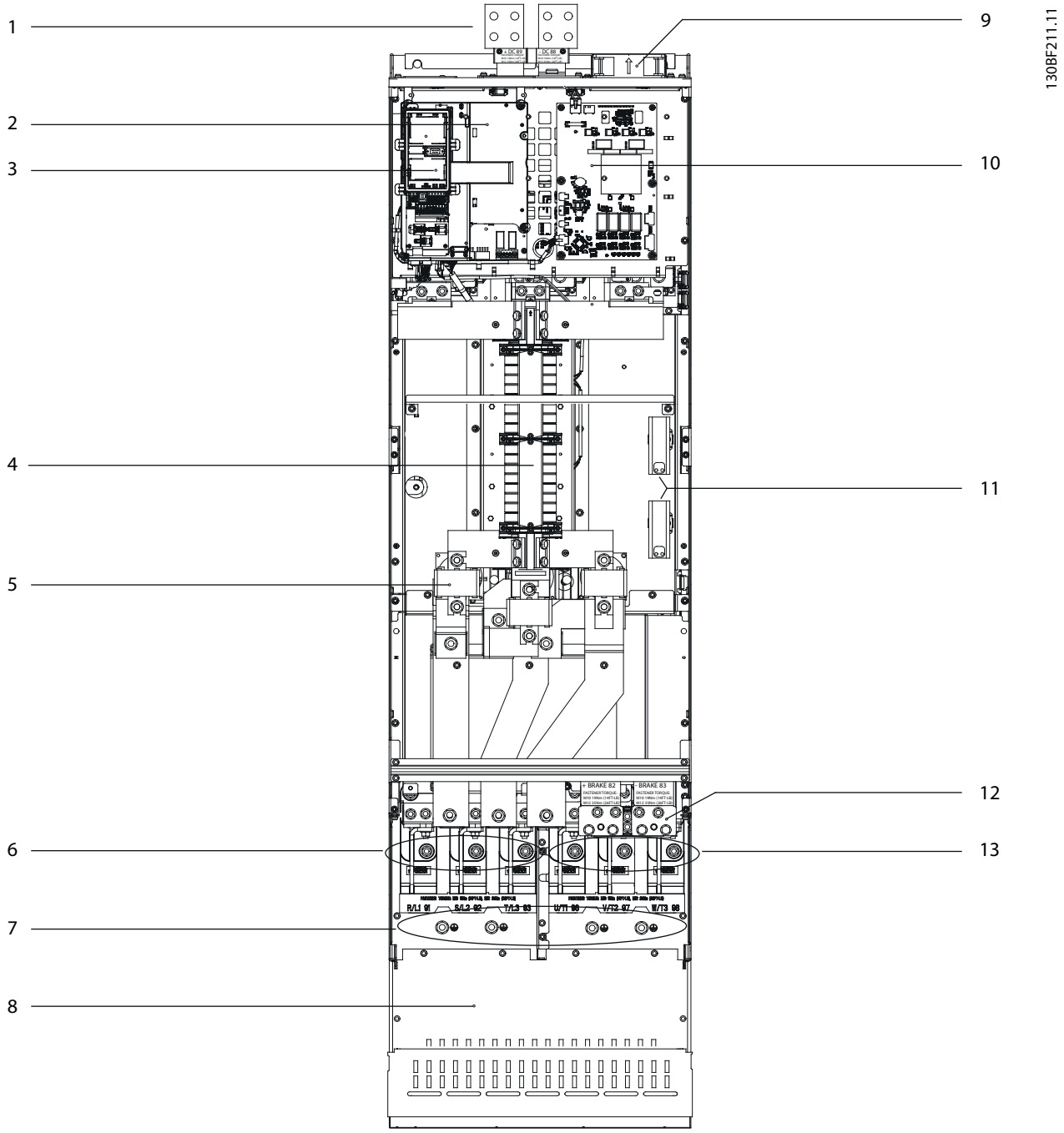

1	Load share/regeneration terminals (optional)	8	RFI shield termination (optional, but is standard when RFI filter is ordered)
2	Control shelf (see *Illustration 3.3*)	9	Fans (used to cool the front section of enclosure)
3	Local control panel (LCP) cradle	10	Fan power card
4	RFI filter (optional)	11	Space heater (optional)
5	Mains fuses (optional)	12	Brake terminals (optional)
6	Mains terminals	13	Motor terminals
7	Ground terminals	–	–

Illustration 3.2 Interior View of Enclosure E3h (Enclosure E4h is Similar)

3.5 Control Shelf

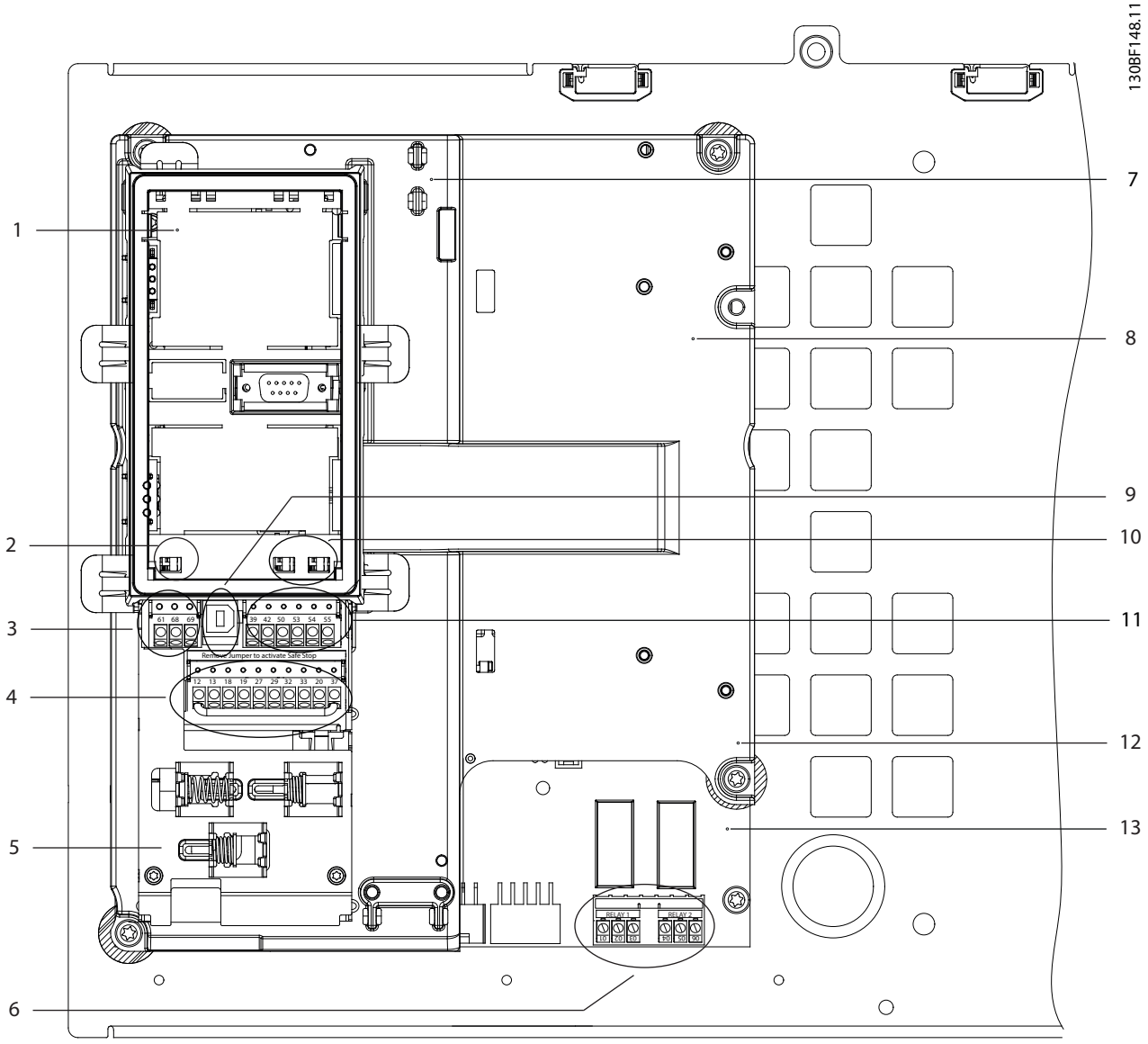

1	LCP cradle (LCP not shown)	8	Control shelf
2	Bus terminal switch (see *chapter 5.8.6 Configuring RS485 Serial Communication*)	9	USB port
3	Serial communication terminals (see *Table 5.1*)	10	Analog input switches A53/A54 (see *chapter 5.8.11 Selecting Voltage/Current Input Signal*)
4	Digital input/output terminals (see *Table 5.2*)	11	Analog input/output terminals (see *Table 5.3*)
5	Cable/EMC clamps	12	Brake resistor terminals, 104–106 (on power card underneath control shelf)
6	Relay 1 and relay 2 (see *Illustration 5.19*)	13	Power card (underneath the control shelf)
7	Control card (underneath LCP and control terminals)	–	–

Illustration 3.3 View of Control Shelf

3.6 Local Control Panel (LCP)

The local control panel (LCP) is the combined display and keypad on the front of the drive.

The LCP is used to:

- Control the drive and motor.
- Access drive parameters and program the drive.
- Display operational data, drive status, and warnings.

A numeric local control panel (NLCP) is available as an option. The NLCP operates in a manner similar to the LCP, but there are differences. For details on how to use the NLCP, see the product-specific *programming guide*.

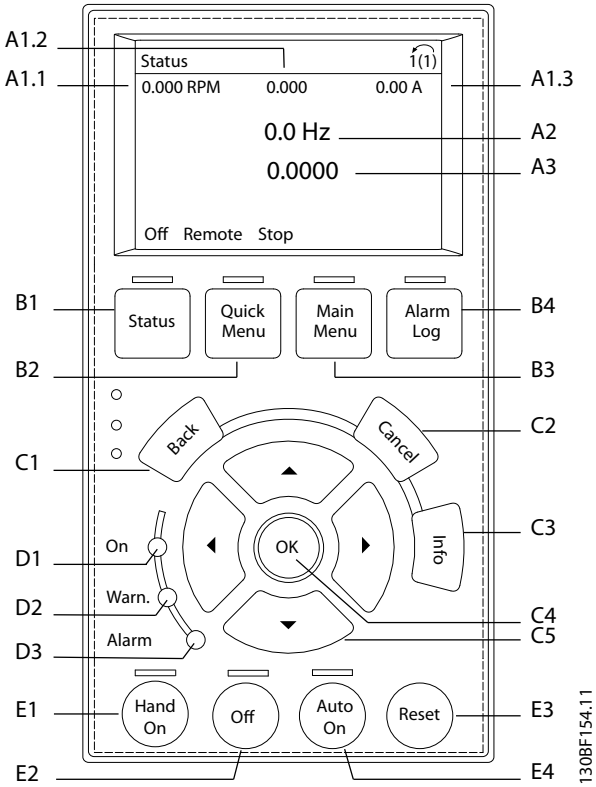

Illustration 3.4 Graphical Local Control Panel (LCP)

A. Display area

Each display readout has a parameter associated with it. See *Table 3.2*. The information shown on the LCP can be customized for specific applications. Refer to *chapter 6.3.1.2 Q1 My Personal Menu*.

Callout	Parameter number	Default setting
A1.1	0-20	Reference [Unit]
A1.2	0-21	Analog input 53 [V]
A1.3	0-22	Motor current [A]
A2	0-23	Frequency [Hz]
A3	0-24	Feedback [Unit]

Table 3.2 LCP Display Area

B. Menu keys

Menu keys are used to access the menu for setting up parameters, toggling through status display modes during normal operation, and viewing fault log data.

Callout	Key	Function
B1	Status	Shows operational information.
B2	Quick Menu	Allows access to parameters for initial set-up instructions. Also provides detailed application steps. Refer to *chapter 6.3.1.1 Quick Menu Mode*.
B3	Main Menu	Allows access to all parameters. Refer to *chapter 6.3.1.9 Main Menu Mode*.
B4	Alarm Log	Shows a list of current warnings and the last 10 alarms.

Table 3.3 LCP Menu Keys

C. Navigation keys

Navigation keys are used for programming functions and moving the display cursor. The navigation keys also provide speed control in local (hand) operation. The display brightness can be adjusted by pressing [Status] and [▲]/[▼] keys.

Callout	Key	Function
C1	Back	Reverts to the previous step or list in the menu structure.
C2	Cancel	Cancels the last change or command as long as the display mode has not changed.
C3	Info	Shows a definition of the function being shown.
C4	OK	Accesses parameter groups or enables an option.
C5	▲ ▼ ◄ ►	Moves between items in the menu.

Table 3.4 LCP Navigation Keys

D. Indicator lights

Indicator lights are used to identify the drive status and to provide a visual notification of warning or fault conditions.

Callout	Indicator	Indicator light	Function
D1	On	Green	Activates when the drive receives power from the mains voltage or a 24 V external supply.
D2	Warn.	Yellow	Activates when warning conditions are active. Text appears in the display area identifying the problem.
D3	Alarm	Red	Activates during a fault condition. Text appears in the display area identifying the problem.

Table 3.5 LCP Indicator Lights

E. Operation keys and reset

The operation keys are found toward the bottom of the local control panel.

Callout	Key	Function
E1	Hand on	Starts the drive in local control. An external stop signal by control input or serial communication overrides the local [Hand On].
E2	Off	Stops the motor but does not remove power to the drive.
E3	Auto on	Puts the system in remote operational mode so it can respond to an external start command by control terminals or serial communication.
E4	Reset	Resets the drive manually after a fault has been cleared.

Table 3.6 LCP Operation Keys and Reset

4 Mechanical Installation

4.1 Items Supplied

Items supplied can vary according to product configuration.

- Make sure that the items supplied and the information on the nameplate correspond to the order confirmation.
- Visually check the packaging and the drive for damage caused by inappropriate handling during shipment. File any claim for damage with the carrier. Retain damaged parts for clarification.

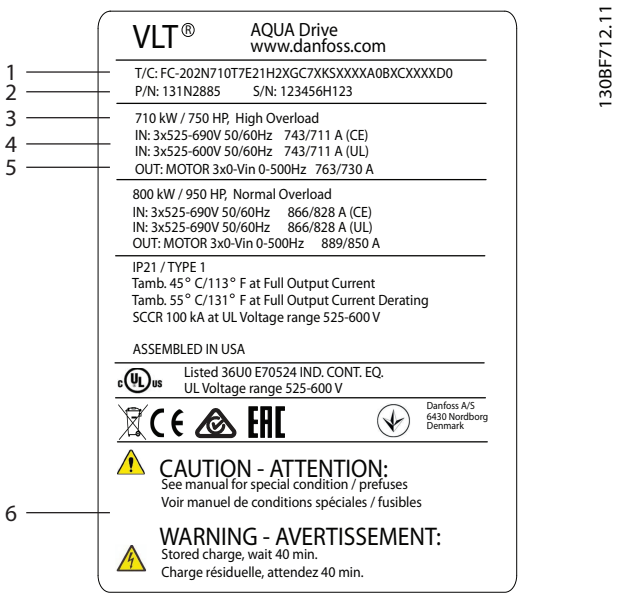

1	Type code
2	Code number
3	Power rating
4	Input voltage, frequency, and current (at low/high voltages)
5	Output voltage, frequency, and current (at low/high voltages)
6	Discharge time

Illustration 4.1 Product Nameplate for E2h Enclosure (Example)

NOTICE

Removing the nameplate from the drive can result in the loss of warranty.

4.2 Tools Needed

Receiving/unloading

- I-beam and hooks rated to lift the weight of the drive. Refer to *chapter 3.2 Power Ratings, Weights, and Dimensions*.
- Crane or other lifting aid to place the unit into position.

Installation

- Drill with 10 mm or 12 mm drill bits.
- Tape measurer.
- Various sizes of Phillips and flat bladed screwdrivers.
- Wrench with relevant metric sockets (7–17 mm).
- Wrench extensions.
- Torx drives (T25 and T50).
- Sheet metal punch for conduits or cable glands.
- I-beam and hooks to lift the weight of the drive. Refer to *chapter 3.2 Power Ratings, Weights, and Dimensions*.
- Crane or other lifting aid to place the drive onto pedestal and into position.

4.3 Storage

Store the drive in a dry location. Keep the equipment sealed in its packaging until installation. Refer to *chapter 9.4 Ambient Conditions* for recommended ambient temperature.

Periodic forming (capacitor charging) is not necessary during storage unless storage exceeds 12 months.

4.4 Operating Environment

In environments with airborne liquids, particles, or corrosive gases, ensure that the IP/Type rating of the equipment matches the installation environment. For specifications regarding ambient conditions, see *chapter 9.4 Ambient Conditions*.

NOTICE

CONDENSATION

Moisture can condense on the electronic components and cause short circuits. Avoid installation in areas subject to frost. Install an optional space heater when the drive is colder than the ambient air. Operating in standby mode reduces the risk of condensation as long as the power dissipation keeps the circuitry free of moisture.

NOTICE

EXTREME AMBIENT CONDITIONS

Hot or cold temperatures compromise unit performance and longevity.

- **Do not operate in environments where the ambient temperature exceeds 55 °C (131 °F).**
- **The drive can operate at temperatures down to -10 °C (14 °F). However, proper operation at rated load is only guaranteed at 0 °C (32 °F) or higher.**
- **If temperature exceeds ambient temperature limits, extra air conditioning of the cabinet or installation site is required.**

4.4.1 Gases

Aggressive gases, such as hydrogen sulfide, chlorine, or ammonia can damage the electrical and mechanical components. The unit uses conformal-coated circuit boards to reduce the effects of aggressive gases. For conformal-coating class specifications and ratings, see *chapter 9.4 Ambient Conditions*.

4.4.2 Dust

When installing the drive in dusty environments, pay attention to the following:

Periodic maintenance

When dust accumulates on electronic components, it acts as a layer of insulation. This layer reduces the cooling capacity of the components, and the components become warmer. The hotter environment decreases the life of the electronic components.

Keep the heat sink and fans free from dust buildup. For more service and maintenance information, refer to *chapter 8 Maintenance, Diagnostics, and Troubleshooting*.

Cooling fans

Fans provide airflow to cool the drive. When fans are exposed to dusty environments, the dust can damage the fan bearings and cause premature fan failure. Also, dust can accumulate on fan blades causing an imbalance which prevents the fans from properly cooling the unit.

4.4.3 Potentially Explosive Atmospheres

⚠WARNING

EXPLOSIVE ATMOSPHERE

Do not install the drive in a potentially explosive atmosphere. Install the unit in a cabinet outside of this area. Failure to follow this guideline increases risk of death or serious injury.

Systems operated in potentially explosive atmospheres must fulfill special conditions. EU Directive 94/9/EC (ATEX 95) classifies the operation of electronic devices in potentially explosive atmospheres.

- Class d specifies that if a spark occurs, it is contained in a protected area.
- Class e prohibits any occurrence of a spark.

Motors with class d protection

Does not require approval. Special wiring and containment are required.

Motors with class e protection

When combined with an ATEX approved PTC monitoring device like the VLT® PTC Thermistor Card MCB 112, installation does not need an individual approval from an approbated organization.

Motors with class d/e protection

The motor itself has an e ignition protection class, while the motor cabling and connection environment is in compliance with the d classification. To attenuate the high peak voltage, use a sine-wave filter at the drive output.

When using a drive in a potentially explosive atmosphere, use the following:

- Motors with ignition protection class d or e.
- PTC temperature sensor to monitor the motor temperature.
- Short motor cables.
- Sine-wave output filters when shielded motor cables are not used.

NOTICE

MOTOR THERMISTOR SENSOR MONITORING

Drives with the VLT® PTC Thermistor Card MCB 112 option are PTB-certified for potentially explosive atmospheres.

4.5 Installation and Cooling Requirements

4

NOTICE

Improper mounting can result in overheating and reduced performance.

Installation requirements

- Locate the unit as near to the motor as possible. See *chapter 9.5 Cable Specifications* for the maximum motor cable length.
- Ensure unit stability by mounting the unit to a solid surface.
- Enclosures E3h and E4h can be mounted:
  - Vertically on the back plate of the panel (typical installation).
  - Vertically upside down on the back plate of the panel.[1)]
  - Horizontally on its back, mounted on the back plate of the panel.[1)]
  - Horizontally on its side, mounted on floor of the panel.[1)]
- Ensure that the strength of the mounting location supports the unit weight.
- Ensure that there is enough space around the unit for proper cooling. Refer to *chapter 9.9 Enclosure Airflow*.
- Ensure enough access to open the door.
- Ensure cable entry from the bottom.

1) For non-typical installation, contact the factory.

Cooling requirements

- Ensure that top and bottom clearance for air cooling is provided. Clearance requirement: 225 mm (9 in).
- Provide sufficient airflow flow rate. See *Table 4.1*.
- Consider derating for temperatures starting between 45 °C (113 °F) and 50 °C (122 °F) and elevation 1000 m (3300 ft) above sea level. See the *design guide* for detailed information.

The drive utilizes a back-channel cooling concept that removes heat sink cooling air. The heat sink cooling air carries approximately 90% of the heat out of the back channel of the drive. Redirect the back-channel air from the panel or room by using:

- **Duct cooling**
  Back-channel cooling kits are available to direct the heat sink cooling air out of the panel when IP20/Chassis drives are installed in Rittal enclosures. These kits reduce the heat in the panel and smaller door fans can be specified.
- **Back-wall cooling**
  Installing top and base covers to the unit allows the back-channel cooling air to be ventilated out of the room.

NOTICE

For E3h and E4h enclosures (IP20/Chassis), at least 1 door fan is required on the enclosure to remove the heat not contained in the back-channel of the drive. It also removes any additional losses generated by other components inside the drive. To select the appropriate fan size, calculate the total required airflow.

Secure the necessary airflow over the heat sink.

Frame	Door fan/top fan [m³/hr (cfm)]	Heat sink fan [m³/hr (cfm)]
E1h51h	510 (300)	994 (585)
E2h	552 (325)	1053–1206 (620–710)
E3h	595 (350)	994 (585)
E4h	629 (370)	1053–1206 (620–710)

Table 4.1 Airflow Rate

4.6 Lifting the Unit

Always lift the drive using the dedicated lifting eyes. To avoid bending the lifting holes, use a bar.

⚠WARNING

RISK OF INJURY OR DEATH

Follow local safety regulations for lifting heavy weights. Failure to follow recommendations and local safety regulations can result in death or serious injury.

- **Ensure that the lifting equipment is in proper working condition.**
- **See *chapter 3.2 Power Ratings, Weights, and Dimensions* for the weight of the different enclosure sizes.**
- **Maximum diameter for bar: 20 mm (0.8 in).**
- **The angle from the top of the drive to the lifting cable: 60° or greater.**

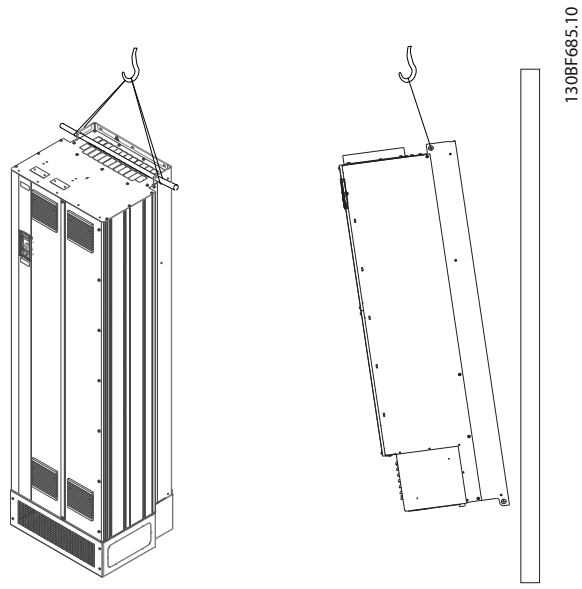

Illustration 4.2 Recommended Lifting Method

4.7 E1h/E2h Mechanical Installation

The E1h and E2h enclosure size is intended only for floor installation, and is shipped with a pedestal and a gland plate. The pedestal and gland plate must be installed for proper installation.

The pedestal is 200 mm (7.9 in) and has an opening in the front to allow airflow necessary to cool the power components of the drive.

The gland plate is necessary to provide cooling air to the control components of the drive via the door fan, and to maintain the IP21/Type 1 or IP54/Type 12 protection rating.

4.7.1 Securing the Pedestal to the Floor

The pedestal must be secured to the floor using 6 bolts before installing the enclosure.

1. Determine proper placement of the unit, concerning operating conditions and cable access.
2. Access the mounting holes by removing the front panel of the pedestal.
3. Set the pedestal on the floor and secure using 6 bolts through the mounting holes. Refer to the circled areas in *Illustration 4.3*.

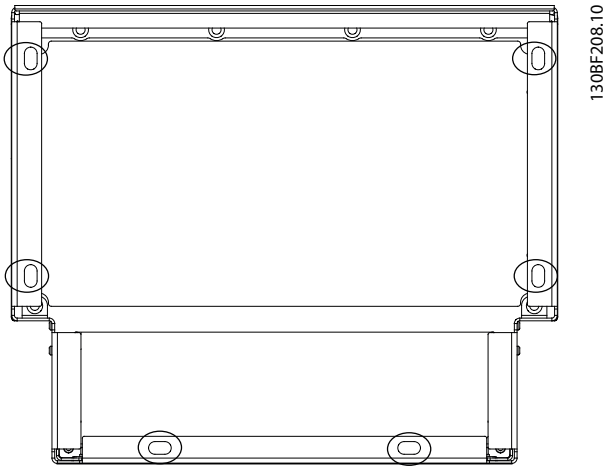

Illustration 4.3 Pedestal to Floor Mounting Points

4.7.2 Attaching the E1h/E2h to the Pedestal

1. Lift the drive and position it on the pedestal. There are 2 bolts in the rear of the pedestal that slide into the 2 slotted holes in the rear of the enclosure. Position the drive by adjusting the bolts up or down. Loosely secure with 2 M10 nuts and locking brackets. See *Illustration 4.4*.
2. Verify that there is 225 mm (9 in) top clearance for air exhaust.
3. Verify that the air intake at the bottom front of the unit is not obstructed.
4. Around the top of the pedestal, secure the enclosure using 6 M10x30 fasteners. Refer to *Illustration 4.5*. Loosely tighten each bolt until all bolts are installed.
5. Fasten each bolt securely and torque to 19 Nm (169 in-lb).
6. Torque the 2 M10 nuts at the rear of the enclosure to 19 Nm (169 in-lb).

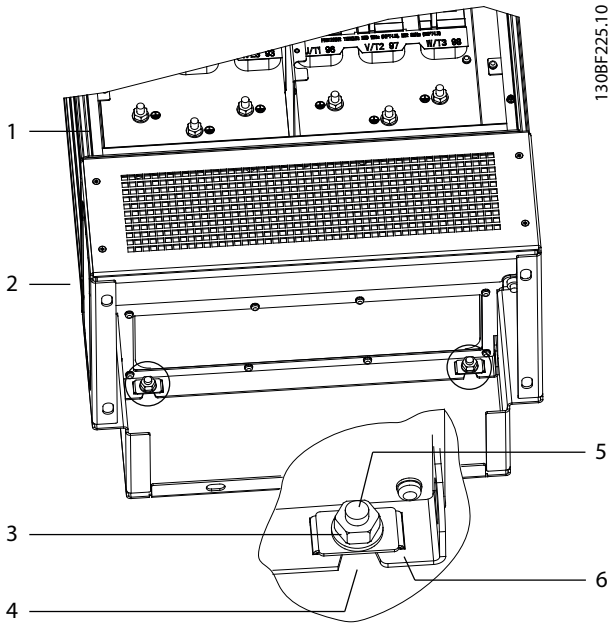

1	Enclosure	4	Slotted hole in enclosure
2	Pedestal	5	Bolt at rear of pedestal
3	M10 nut	6	Locking bracket

Illustration 4.4 Pedestal to Enclosure Back Mounting Points

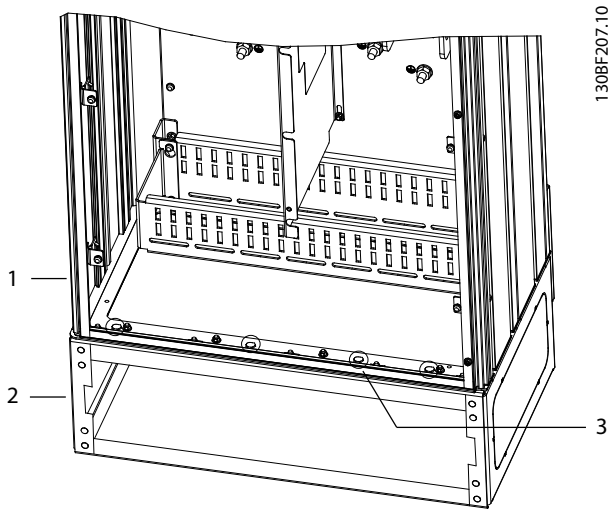

1	Enclosure	3	M10x30 fasteners (rear corner bolts not shown)
2	Pedestal	–	–

Illustration 4.5 Pedestal to Enclosure Mounting Points

4.7.3 Creating Cable Openings

The gland plate is a sheet of metal with studs along the outer edge. The gland plate provides cable entry and cable termination points, and must be installed to maintain the IP21/IP54 (Type 1/Type 12) protection rating. The plate is placed between the drive enclosure and the pedestal. Depending on stud orientation, the plate can be installed from inside the enclosure or the pedestal. For gland plate dimensions, see *chapter 9.8.1 E1h Exterior Dimensions*.

Refer to *Illustration 4.6* for the following steps.

1. Create cable entry holes in the gland plate using a sheet metal punch.
2. Insert the gland plate using 1 of the following methods:
   - 2a To insert the gland plate through the pedestal, slide the gland plate through the slot (4) in the front of the pedestal.
   - 2b To insert the gland plate through the enclosure, angle the gland plate until it can be slid under the slotted brackets.
3. Align the studs on the gland plate to the holes in the pedestal and secure with 10 M5 nuts (2).
4. Torque each nut to 2.3 Nm (20 in-lb).

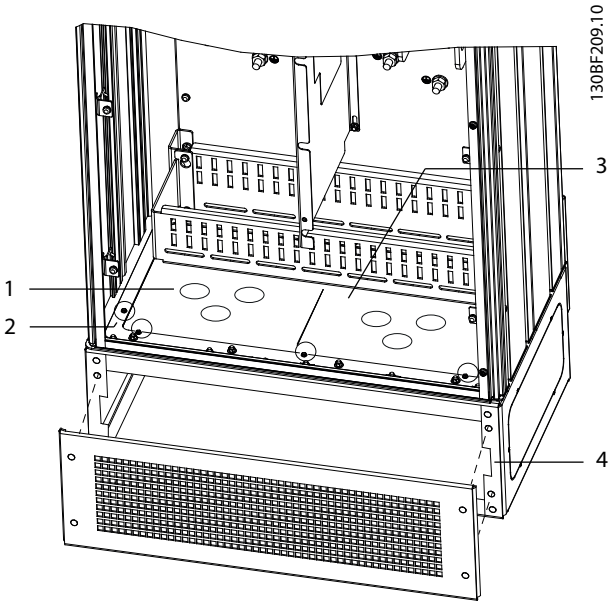

1	Cable entry hole	4	Slot in pedestal base
2	M5 nut	5	Front cover/grill
3	Gland plate	–	–

Illustration 4.6 Installing the Gland Plate

4.8 E3h/E4h Mechanical Installation

The E3h and E4h enclosure sizes are intended to be mounted on a wall or on a mounting panel within an enclosure. A plastic gland plate is installed on the enclosure. It is designed to prevent unintentional access to the terminals in an IP20/protected chasis unit.

NOTICE

REGENERATION/LOAD SHARE OPTION

Due to the exposed terminals at the top of the enclosure, units with the regeneration/load share option have an IP00 protection rating.

4.8.1 Attaching the E3h/E4h to a Mounting Plate or Wall

1. Drill the mounting holes according to the enclosure size. Refer to *chapter 9.8 Enclosure Dimensions*.
2. Secure the top of the drive enclosure to the mounting plate or wall.
3. Secure the base of the drive enclosure to the mounting plate or wall.

4.8.2 Creating Cable Openings

The gland plate covers the bottom part of the drive enclosure and must be installed to maintain the IP20/Chassis protection rating. The gland plate consists of plastic squares that can be cut out to provide cable access to the terminals. See *Illustration 4.7*.

1. Remove the bottom panel and terminal cover. See *Illustration 4.8*.
   - 1a Detach the bottom panel by removing 4 T25 screws.
   - 1b Remove 5 T20 screws that secure the bottom of the drive to the top of the terminal cover, and then pull the terminal cover straight out.
2. Determine the size and position of the motor, mains, and ground cables. Note their position and measurements.
3. Based on the measurement and positions of the cables, create openings in the plastic gland plate by cutting out the necessary squares.
4. Slide the plastic gland plate (7) onto the bottom rails of the terminal cover.
5. Tilt the front of the terminal cover downward until the fastener points (8) rest on the slotted drive brackets (6).
6. Make sure the side panels of the terminal cover are on the outside track guide (5).
7. Push the terminal cover until it is up against the slotted drive bracket.
8. Tilt the front of the terminal cover upward until the fastener hole in the bottom of the drive aligns with the keyhole opening (9) in the terminal. Secure with 2 T25 screws and torque to 2.3 Nm (20 in-lb).
9. Secure the bottom panel with 3 T25 screws and torque to 2.3 Nm (20 in-lb).

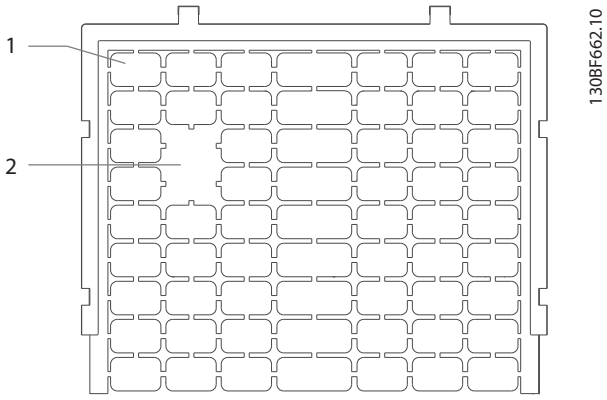

1	Plastic square
2	Squares removed for cable access

Illustration 4.7 Plastic Gland Plate

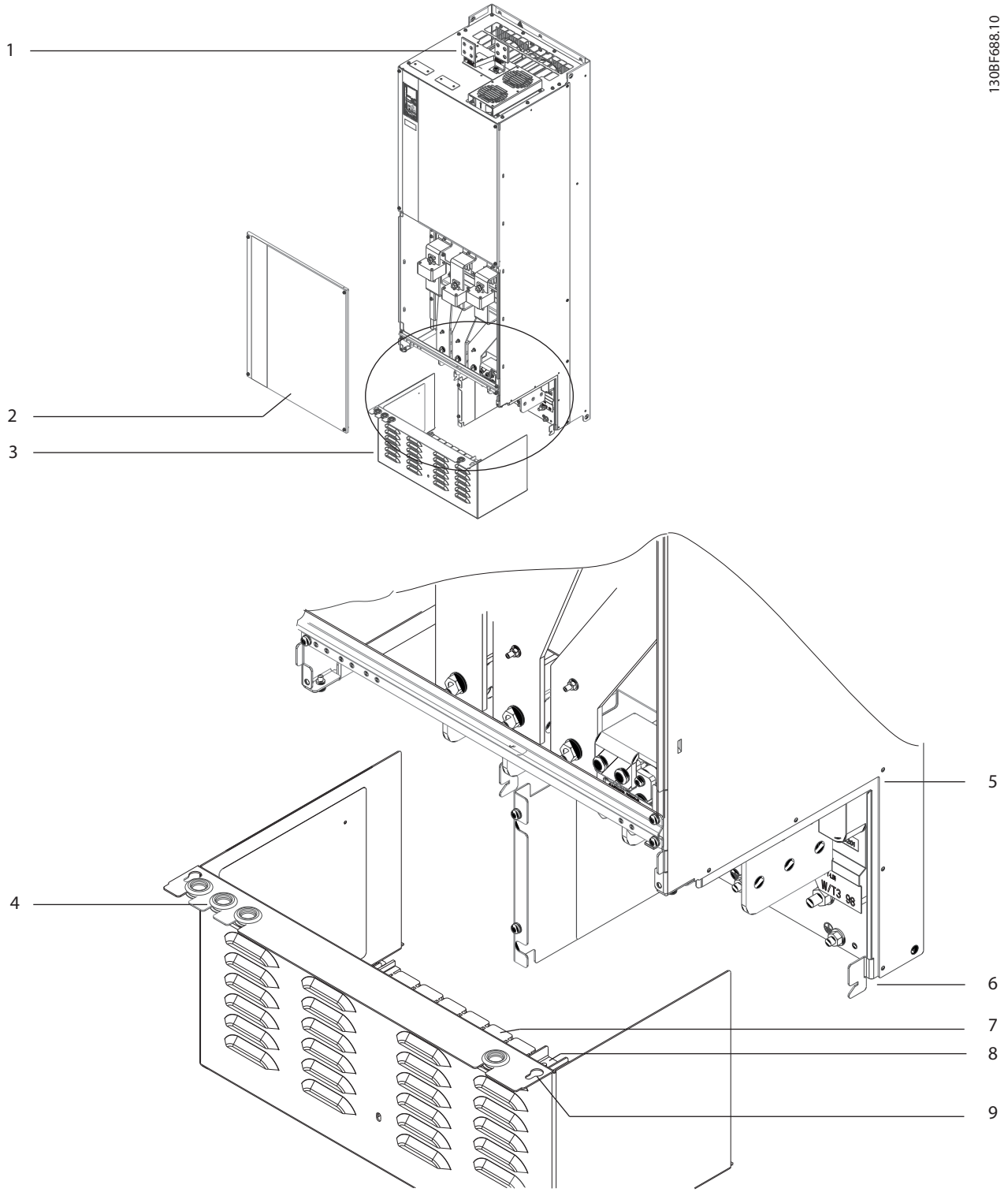

1	Load share/regeneration terminals (optional)	6	Slotted drive bracket
2	Bottom panel	7	Plastic gland plate (installed)
3	Terminal cover	8	Fastener point
4	Grommet access hole for control wiring	9	Keyhole opening
5	Track guide	–	–

Illustration 4.8 Assembling the Gland Plate and Terminal Cover

4.8.3 Installing Load share/Regeneration Terminals

The load share/regeneration terminals, located on the top of the drive, are not installed from the factory to prevent damage during shipping. Refer to *Illustration 4.9* for the following steps.

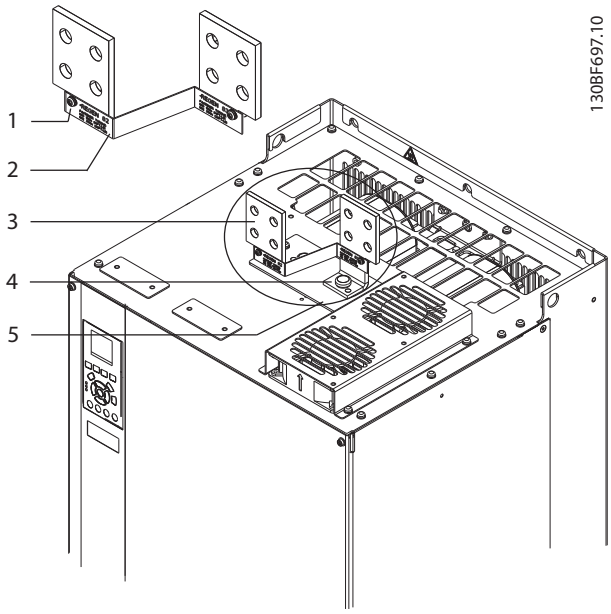

1	Label fastener, M4
2	Label
3	Load share/regeneration terminal
4	Terminal fastener, M10
5	Terminal plate with 2 openings

Illustration 4.9 Load share/Regeneration Terminals

1. Remove the terminal plate, 2 terminals, label, and fasteners from the accessory bag included with the drive.
2. Remove the cover from the load share/regeneration opening on the top of the drive. Put aside the 2 M5 fasteners for reuse later.
3. Remove the plastic backing and install the terminal plate over the load share/regeneration opening. Secure with the 2 M5 fasteners and torque to 2.3 Nm (20 in-lb).
4. Install both terminals to the terminal plate using 1 M10 fastener per terminal. Torque to 19 Nm (169 in-lb).
5. Install the label on the front of the terminals as shown in *Illustration 4.9*. Secure with 2 M4 screws and torque to 1.2 Nm (10 in-lb).

5 Electrical Installation

5.1 Safety Instructions

See *chapter 2 Safety* for general safety instructions.

⚠WARNING

INDUCED VOLTAGE

Induced voltage from output motor cables from different drives that are run together can charge equipment capacitors even with the equipment turned off and locked out. Failure to run output motor cables separately or use shielded cables could result in death or serious injury.

- **Run output motor cables separately or use shielded cables.**
- **Simultaneously lock out all the drives.**

⚠WARNING

SHOCK HAZARD

The drive can cause a DC current in the ground conductor and thus result in death or serious injury.

- **When a residual current-operated protective device (RCD) is used for protection against electrical shock, only an RCD of Type B is allowed on the supply side.**

Failure to follow the recommendation means that the RCD cannot provide the intended protection.

Overcurrent protection

- Additional protective equipment such as short-circuit protection or motor thermal protection between drive and motor is required for applications with multiple motors.
- Input fusing is required to provide short circuit and overcurrent protection. If fuses are not factory-supplied, the installer must provide them. See maximum fuse ratings in *chapter 9.7 Fuses*.

Wire type and ratings

- All wiring must comply with local and national regulations regarding cross-section and ambient temperature requirements.
- Power connection wire recommendation: Minimum 75 °C (167 °F) rated copper wire.

See *chapter 9.5.1 Cable Specifications* for recommended wire sizes and types.

⚠CAUTION

PROPERTY DAMAGE

Protection against motor overload is not included in the default setting. To add this function, set *parameter 1-90 Motor Thermal Protection* to *[ETR trip]* or *[ETR warning]*. For the North American market, the ETR function provides class 20 motor overload protection in accordance with NEC. Failure to set *parameter 1-90 Motor Thermal Protection* to *[ETR trip]* or *[ETR warning]* means that motor overload protection is not provided and, if the motor overheats, property damage can occur.

5.2 EMC-compliant Installation

To obtain an EMC-compliant installation, follow the instructions provided in:

- *Chapter 5.3 Wiring Schematic*.
- *Chapter 5.4 Connecting the Motor*.
- *Chapter 5.6 Connecting to Ground*.
- *Chapter 5.8 Control Wiring*.

NOTICE

TWISTED SHIELD ENDS (PIGTAILS)

Twisted shield ends (pigtails) increase the shield impedance at higher frequencies, reducing the shield effect and increasing the leakage current. Avoid twisted shield ends by using integrated shield clamps.

- For use with relays, control cables, a signal interface, fieldbus, or brake, connect the shield to the enclosure at both ends. If the ground path has high impedance, is noisy, or is carrying current, break the shield connection on 1 end to avoid ground current loops.
- Convey the currents back to the unit using a metal mounting plate. Ensure good electrical contact from the mounting plate through the mounting screws to the drive chassis.
- Use shielded cables for motor output cables. An alternative is unshielded motor cables within metal conduit.

NOTICE

SHIELDED CABLES

If shielded cables or metal conduits are not used, the unit and the installation do not meet regulatory limits on radio frequency (RF) emission levels.

- Ensure that motor and brake cables are as short as possible to reduce the interference level from the entire system.
- Avoid placing cables with a sensitive signal level alongside motor and brake cables.
- For communication and command/control lines, follow the particular communication protocol standards. For example, USB must use shielded cables, but RS485/ethernet can use shielded UTP or unshielded UTP cables.
- Ensure that all control terminal connections are PELV.

NOTICE

EMC INTERFERENCE

Use shielded cables for motor and control wiring, and separate cables for mains input, motor wiring, and control wiring. Failure to isolate power, motor, and control cables can result in unintended behavior or reduced performance. Minimum 200 mm (7.9 in) clearance between mains input, motor, and control cables are required.

NOTICE

INSTALLATION AT HIGH ALTITUDE

There is a risk for overvoltage. Isolation between components and critical parts could be insufficient, and not comply with PELV requirements. Reduce the risk for overvoltage by using external protective devices or galvanic isolation.
For installations above 2000 m (6500 ft) altitude, contact Danfoss regarding PELV compliance.

NOTICE

PELV COMPLIANCE

Prevent electric shock by using protective extra low voltage (PELV) electrical supply and complying with local and national PELV regulations.

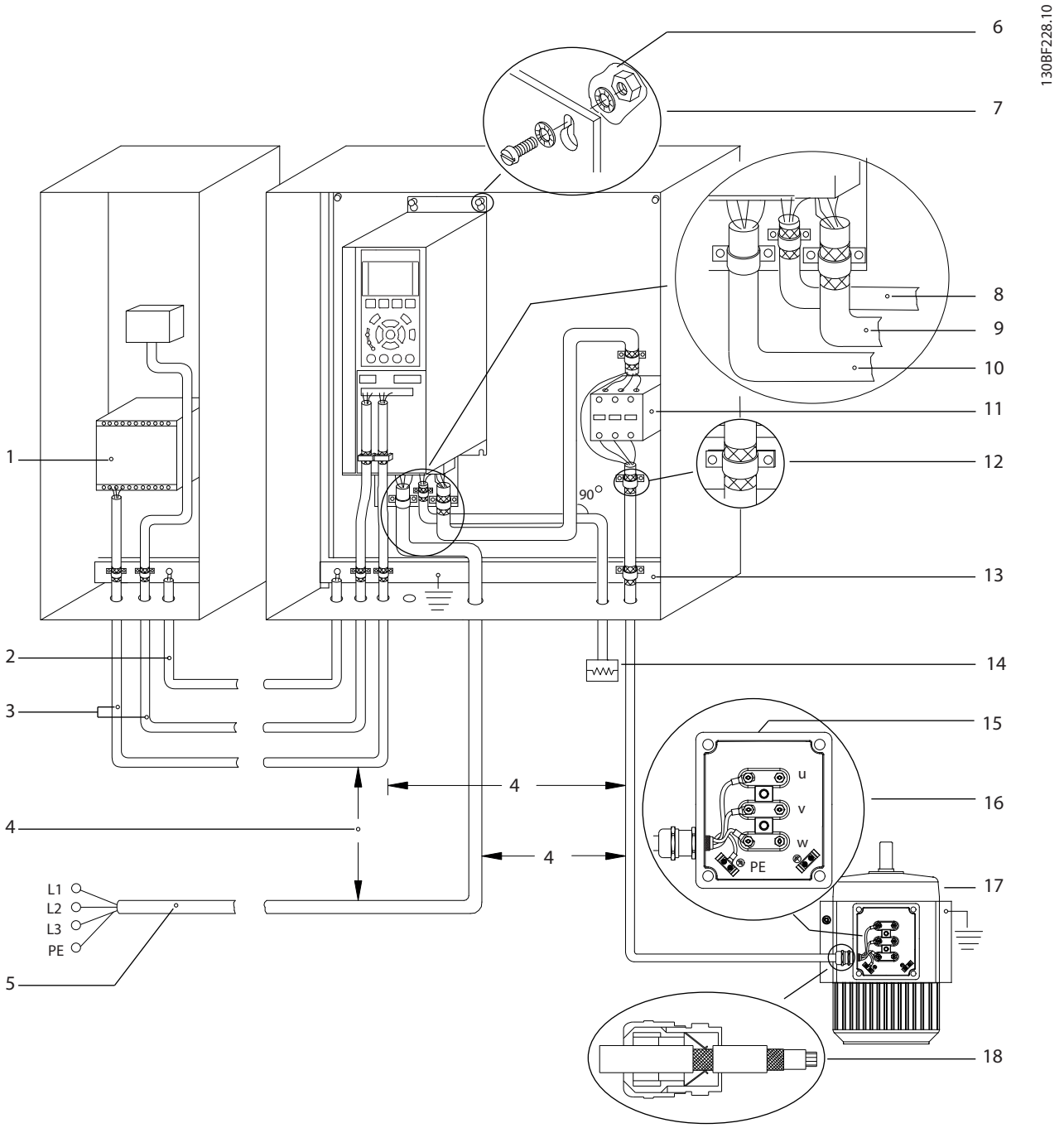

1	PLC	10	Mains cable (unshielded)
2	Minimum 16 mm^2 (6 AWG) equalizing cable	11	Output contactor and similar options
3	Control cables	12	Cable insulation stripped
4	Minimum 200 mm (7.9 in) required between control cables, motor cables, and mains cables.	13	Common ground busbar. Follow local and national requirements for enclosure grounding.
5	Mains supply	14	Brake resistor
6	Bare (unpainted) surface	15	Metal box
7	Star washers	16	Connection to motor
8	Brake cable (shielded)	17	Motor
9	Motor cable (shielded)	18	EMC cable gland

Illustration 5.1 Example of Proper EMC Installation

5.3 Wiring Schematic

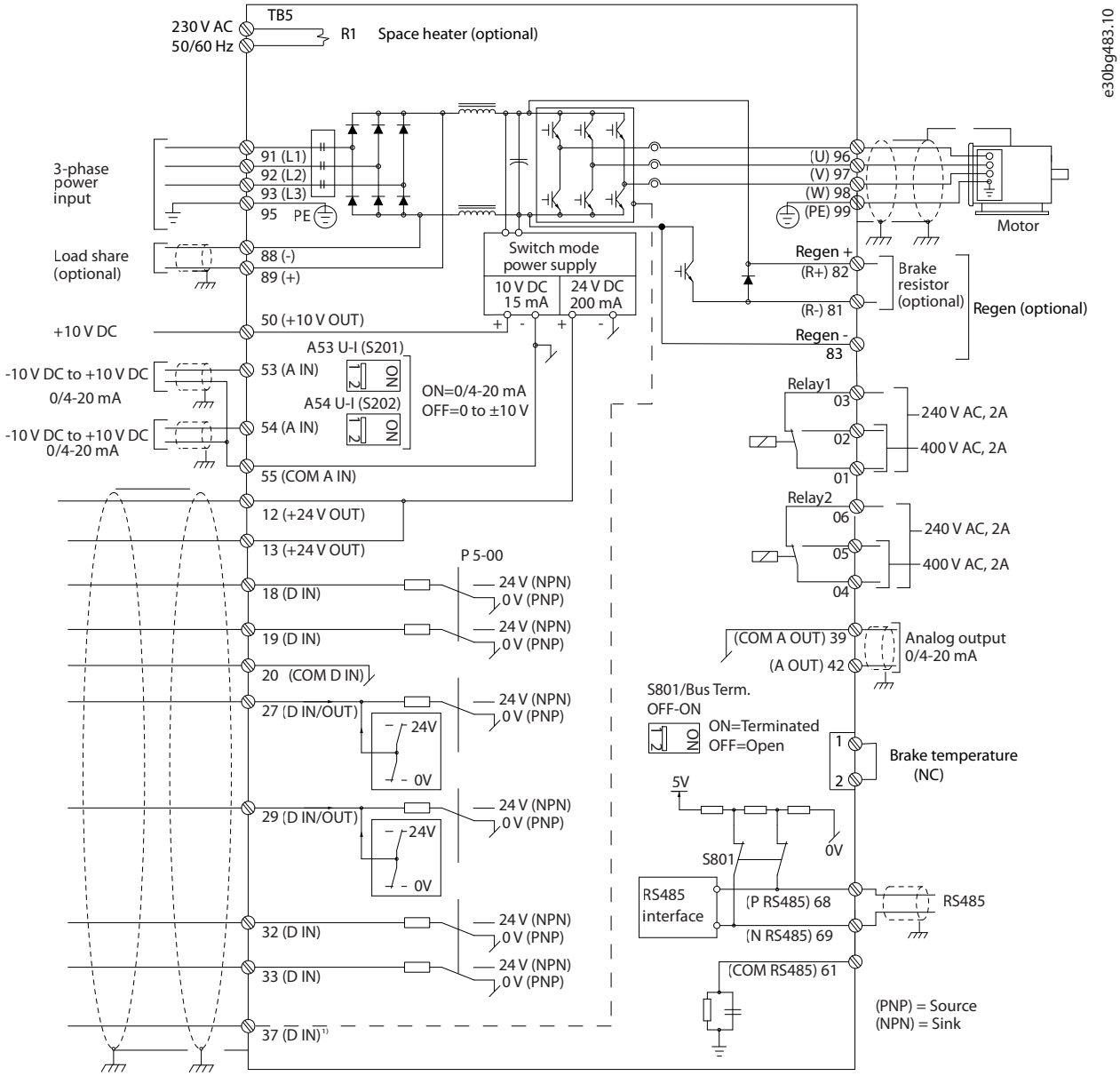

Illustration 5.2 Basic Wiring Schematic

1) Terminal 37 (optional) is used for Safe Torque Off. Refer to the VLT® FC Series - Safe Torque Off Operating Guide for installation instructions.

5.4 Connecting the Motor

⚠WARNING

INDUCED VOLTAGE

Induced voltage from output motor cables that run together can charge equipment capacitors, even with the equipment turned off and locked out. Failure to run output motor cables separately or use shielded cables could result in death or serious injury.

- Comply with local and national electrical codes for cable sizes. For maximum wire sizes, see *chapter 9.1 Electrical Data*.
- Follow motor manufacturer wiring requirements.
- Motor wiring knockouts or access panels are provided on the pedestal of IP21/IP54 (Type 1/Type 12) units.
- Do not wire a starting or pole-changing device (for example Dahlander motor or slip ring asynchronous motor) between the drive and the motor.

Procedure

1. Strip a section of the outer cable insulation.
2. Establish mechanical fixation and electrical contact between the cable shield and ground by positioning the stripped wire under the cable clamp.
3. Connect the ground wire to the nearest grounding terminal in accordance with the grounding instructions provided in *chapter 5.6 Connecting to Ground*.
4. Connect the 3-phase motor wiring to terminals 96 (U), 97 (V), and 98 (W), see *Illustration 5.3*.
5. Tighten the terminals in accordance with the information provided in *chapter 9.10.1 Fastener Torque Ratings*.

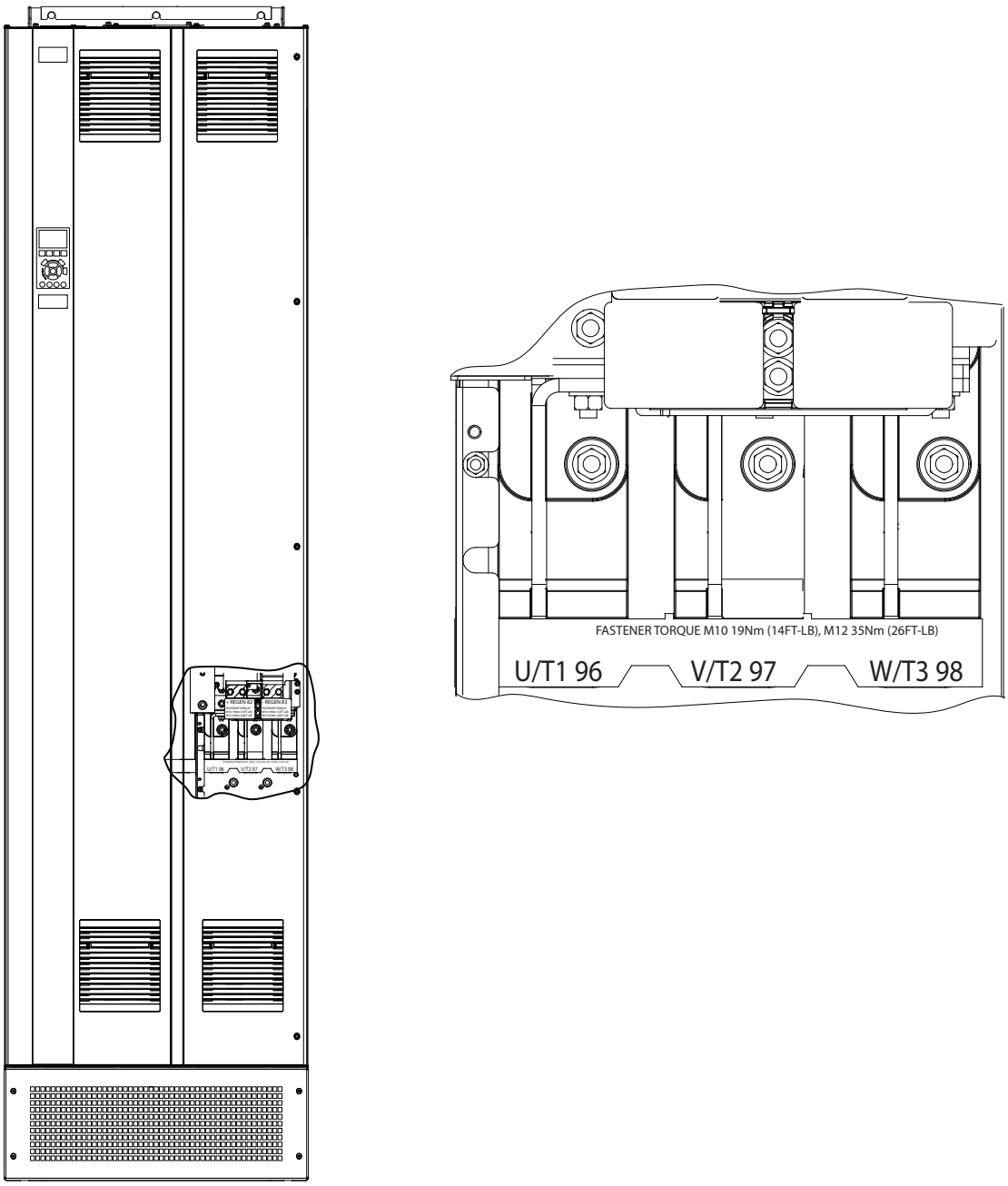

Illustration 5.3 AC motor terminals (E1h shown). For a detailed view of terminals, refer to *chapter 5.7 Terminal Dimensions*.

5.5 Connecting the AC Mains

- Size the wiring according to the input current of the drive. For maximum wire sizes, see *chapter 9.1 Electrical Data*.
- Comply with local and national electrical codes for cable sizes.

Procedure

1. Strip a section of the outer cable insulation.
2. Establish mechanical fixation and electrical contact between the cable shield and ground by positioning the stripped wire under the cable clamp.
3. Connect the ground wire to the nearest grounding terminal in accordance with the grounding instructions provided in *chapter 5.6 Connecting to Ground*.
4. Connect the 3-phase AC input power wiring to terminals R, S, and T (see *Illustration 5.4*).
5. Tighten the terminals in accordance with the information provided in *chapter 9.10.1 Fastener Torque Ratings*.
6. When supplied from an isolated mains source (IT mains or floating delta) or TT/TN-S mains with a grounded leg (grounded delta), ensure that *parameter 14-50 RFI Filter* is set to *[0] Off* to avoid damage to the DC link and to reduce ground capacity currents.

NOTICE

OUTPUT CONTACTOR

Danfoss does not recommend using an output contactor on 525–590 V drives that are connected to an IT mains network.

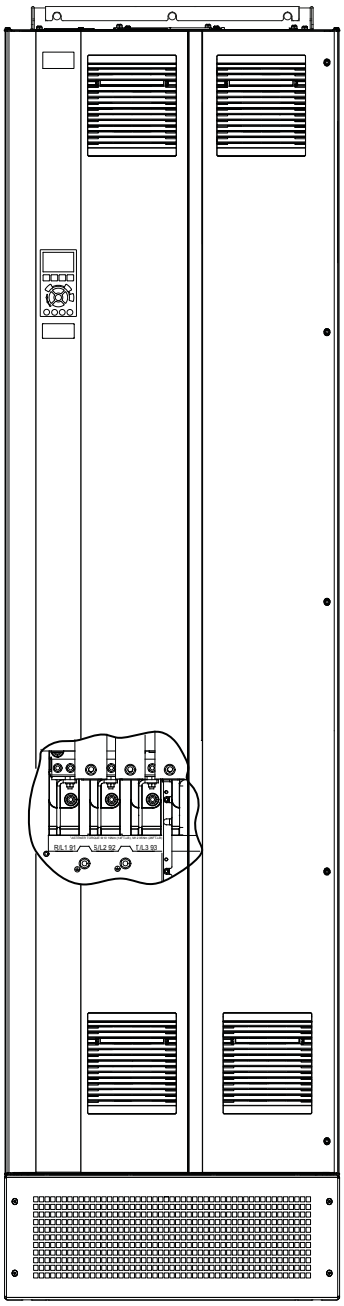

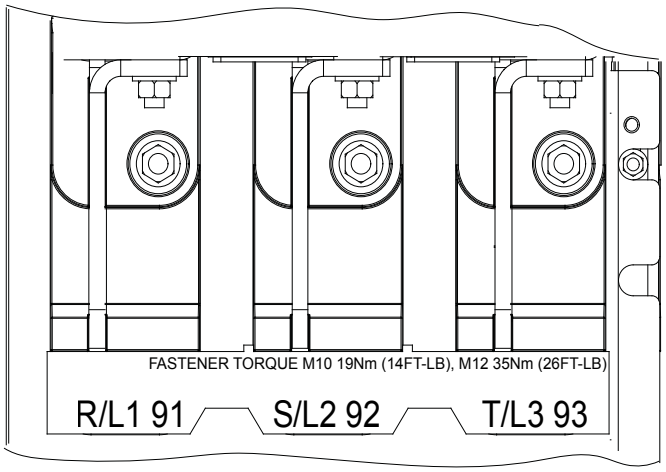

130BF151.10

Illustration 5.4 AC mains terminals (E1h shown). For a detailed view of terminals, refer to *chapter 5.7 Terminal Dimensions*.

5.6 Connecting to Ground

⚠WARNING

LEAKAGE CURRENT HAZARD

Leakage currents exceed 3.5 mA. Failure to ground the drive properly can result in death or serious injury.

- **Ensure the correct grounding of the equipment by a certified electrical installer.**

For electrical safety

- Ground the drive in accordance with applicable standards and directives.
- Use a dedicated ground wire for input power, motor power, and control wiring.
- Do not ground 1 drive to another in a daisy chain fashion.
- Keep the ground wire connections as short as possible.
- Follow motor manufacturer wiring requirements.
- Minimum cable cross-section: 10 mm^2 (6 AWG) (or 2 rated ground wires terminated separately).
- Tighten the terminals in accordance with the information provided in *chapter 9.10.1 Fastener Torque Ratings*.

For EMC-compliant installation

- Establish electrical contact between the cable shield and the drive enclosure by using metal cable glands or by using the clamps provided on the equipment.
- Reduce burst transient by using high-strand wire.
- Do not use pigtails.

NOTICE

POTENTIAL EQUALIZATION

There is a risk of burst transient when the ground potential between the drive and the control system is different. Install equalizing cables between the system components. Recommended cable cross-section: 16 mm^2 (5 AWG).

130BF152.10

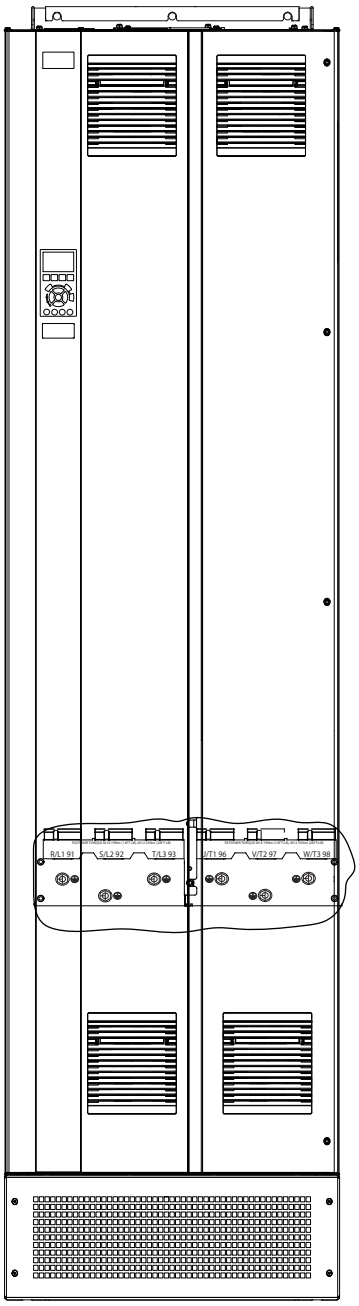

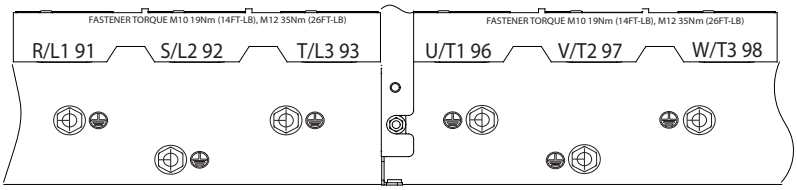

Illustration 5.5 Ground terminals (E1h shown). For a detailed view of terminals, refer to *chapter 5.7 Terminal Dimensions*.

5

5.7 Terminal Dimensions

5.7.1 E1h Terminal Dimensions

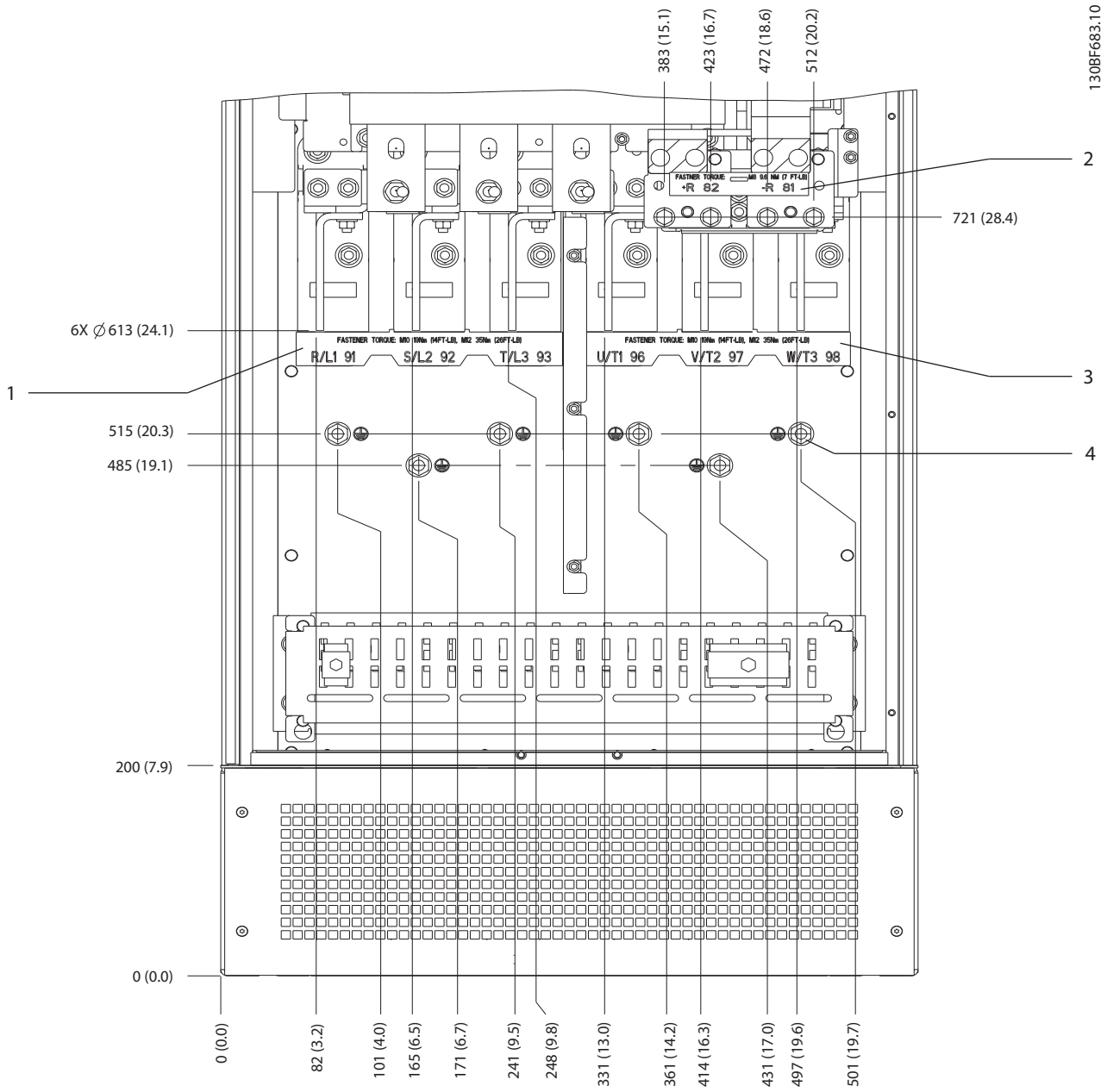

1	Mains terminals	3	Motor terminals
2	Brake or regeneration terminals	4	Ground terminals, M10 nut

Illustration 5.6 E1h Terminal Dimensions (Front View)

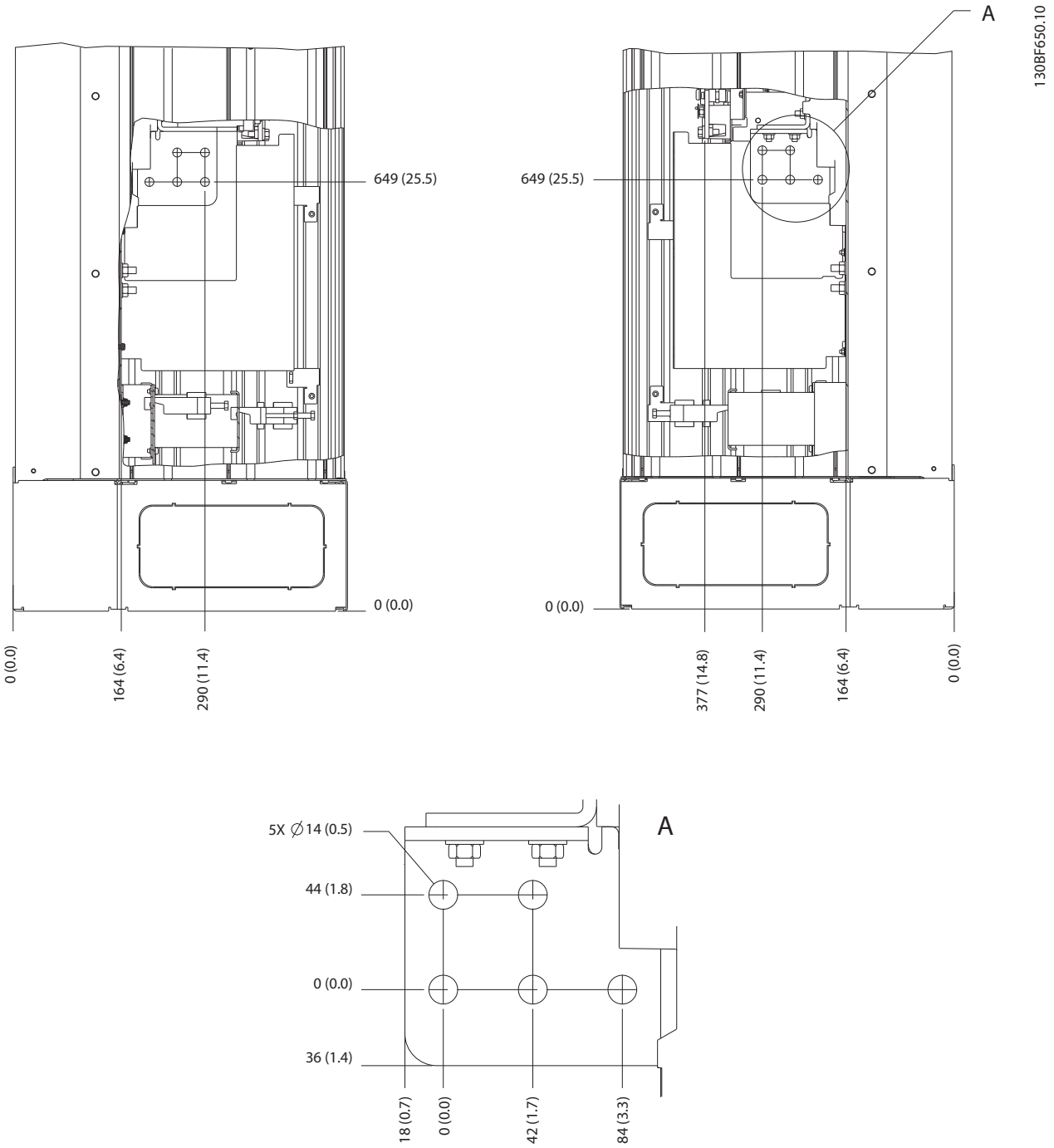

Illustration 5.7 E1h Terminal Dimensions (Side Views)

5

5.7.2 E2h Terminal Dimensions

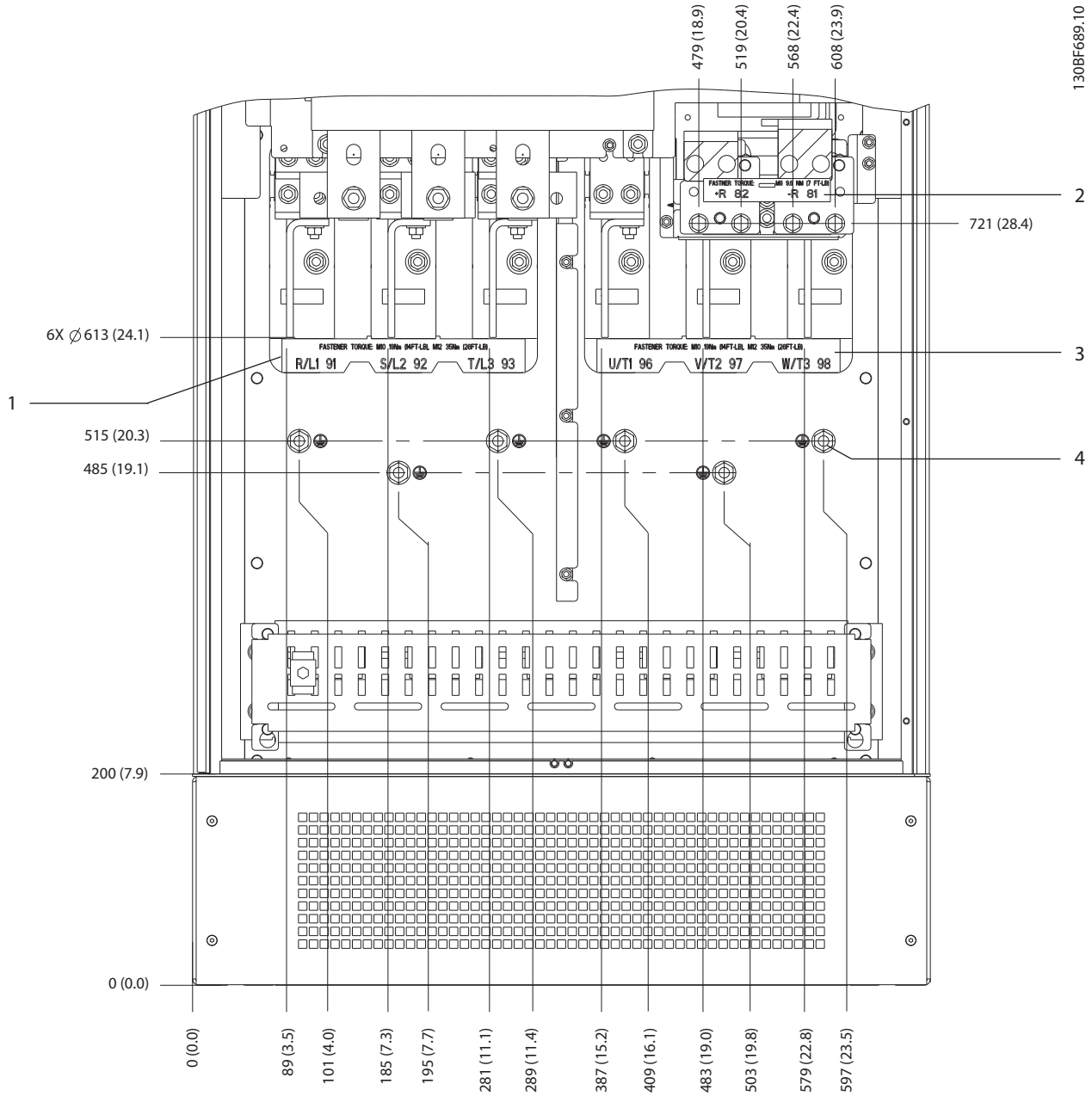

1	Mains terminals	3	Motor terminals
2	Brake or regeneration terminals	4	Ground terminals, M10 nut

Illustration 5.8 E2h Terminal Dimensions (Front View)

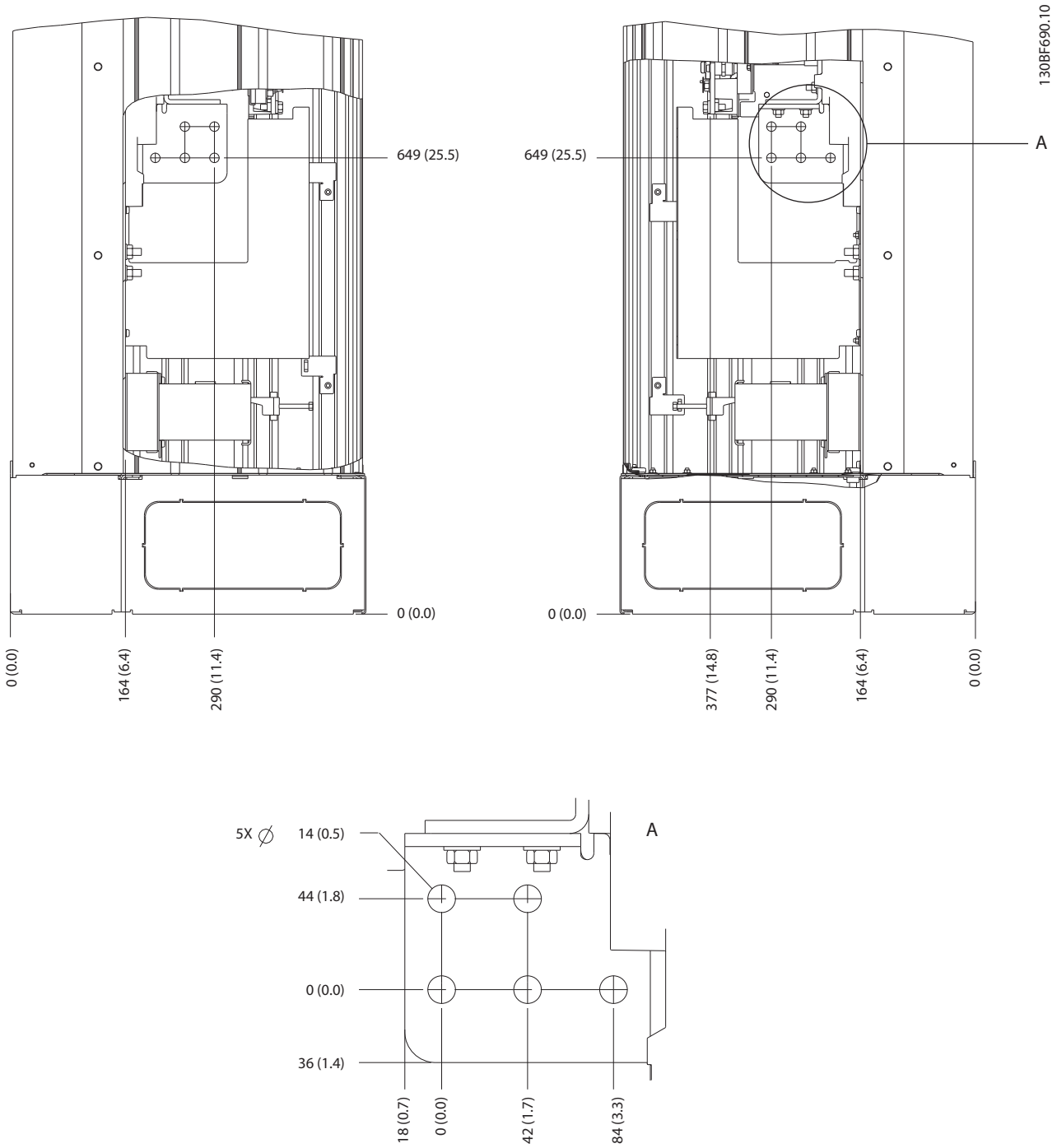

Illustration 5.9 E2h Terminal Dimensions (Side Views)

5

5.7.3 E3h Terminal Dimensions

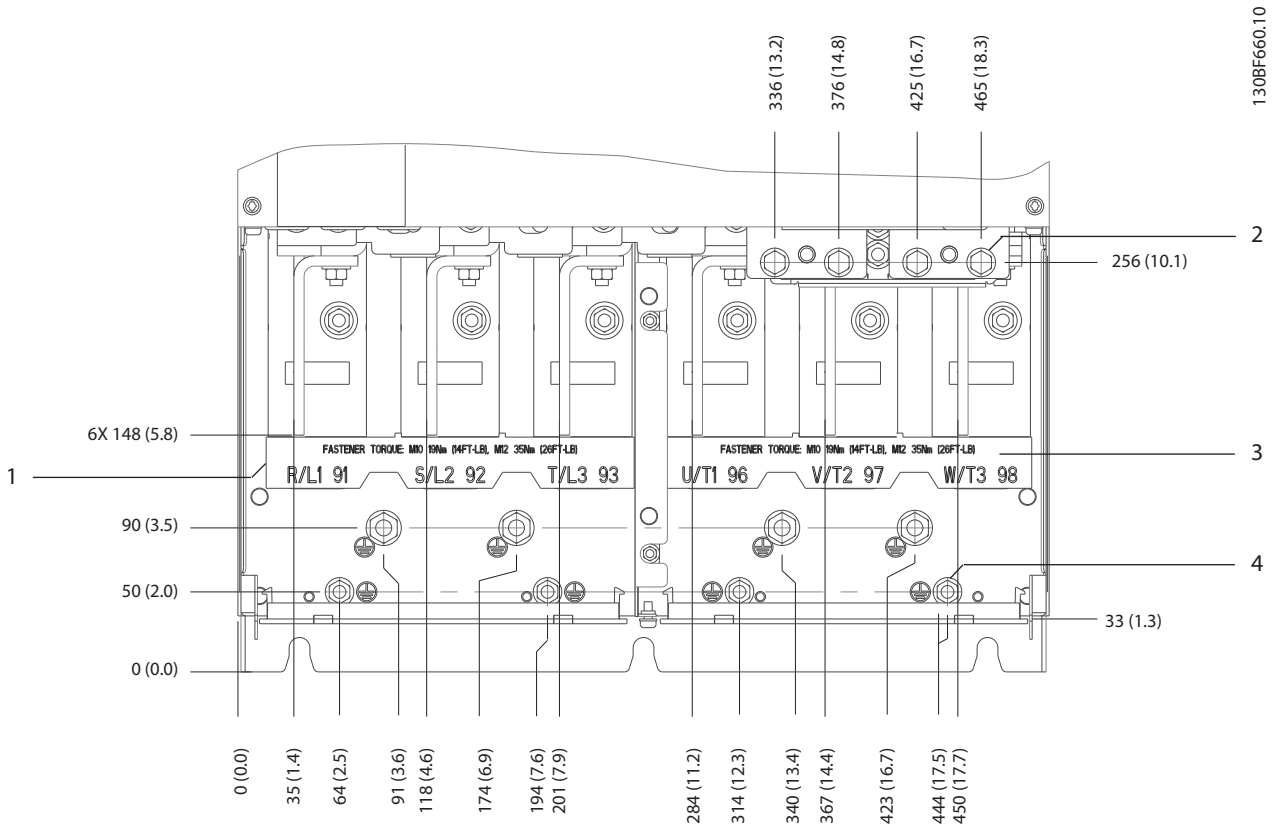

1	Mains terminals	3	Motor terminals
2	Brake or regeneration terminals	4	Ground terminals, M8 and M10 nuts

Illustration 5.10 E3h Terminal Dimensions (Front View)

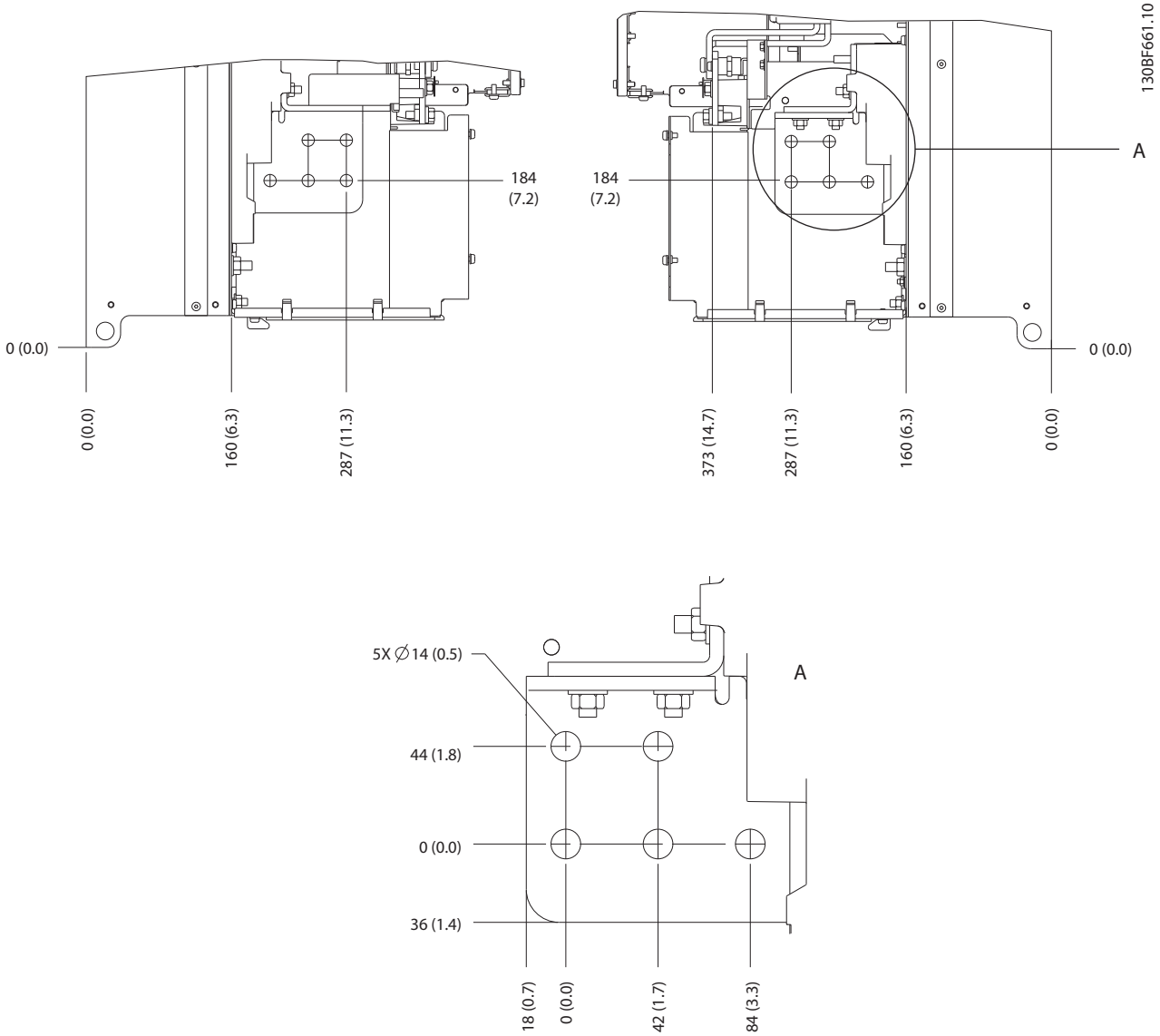

Illustration 5.11 E3h Mains, Motor, and Ground Terminal Dimensions (Side Views)

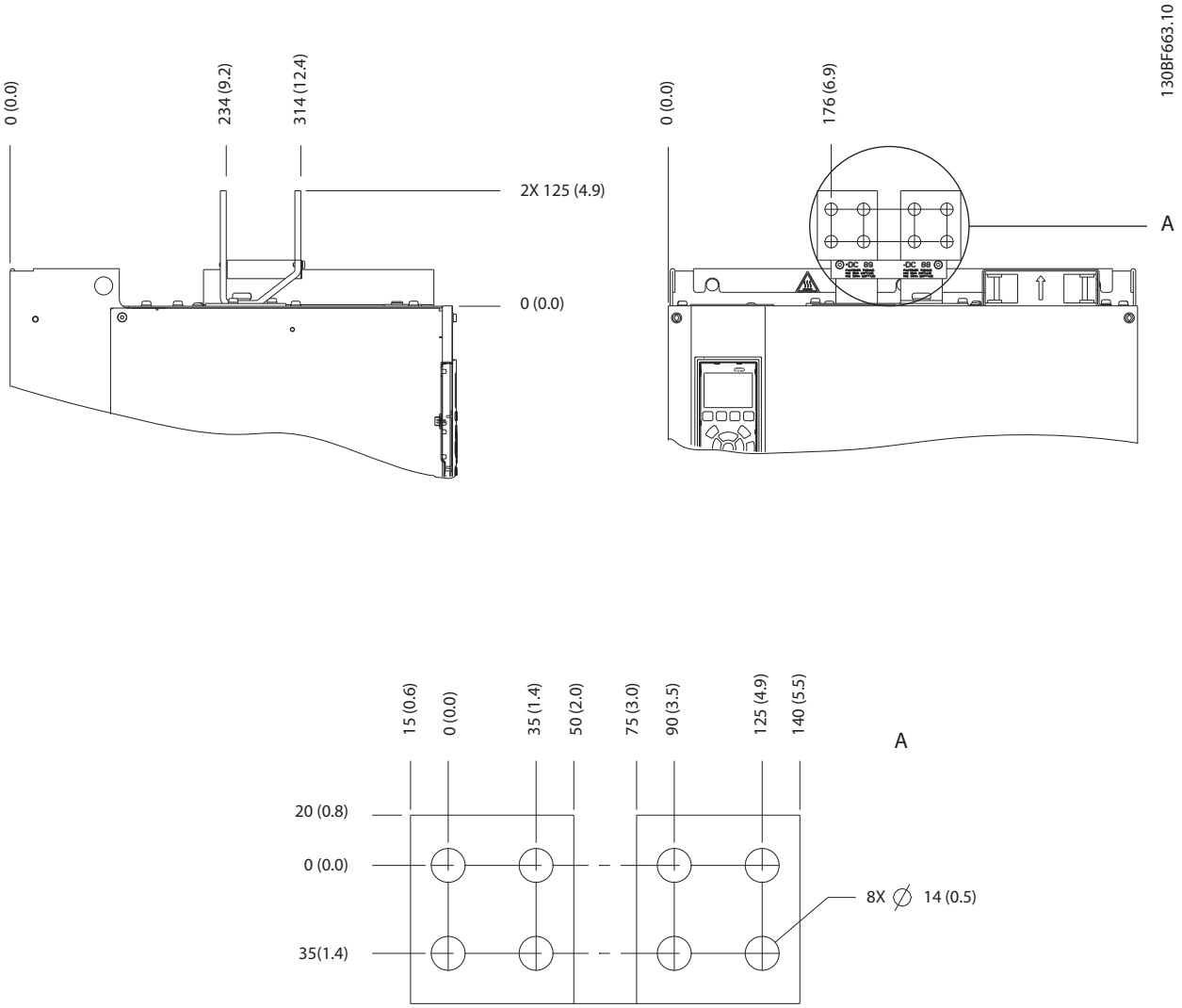

Illustration 5.12 E3h Load Share/Regeneration Terminal Dimensions

5.7.4 E4h Terminal Dimensions

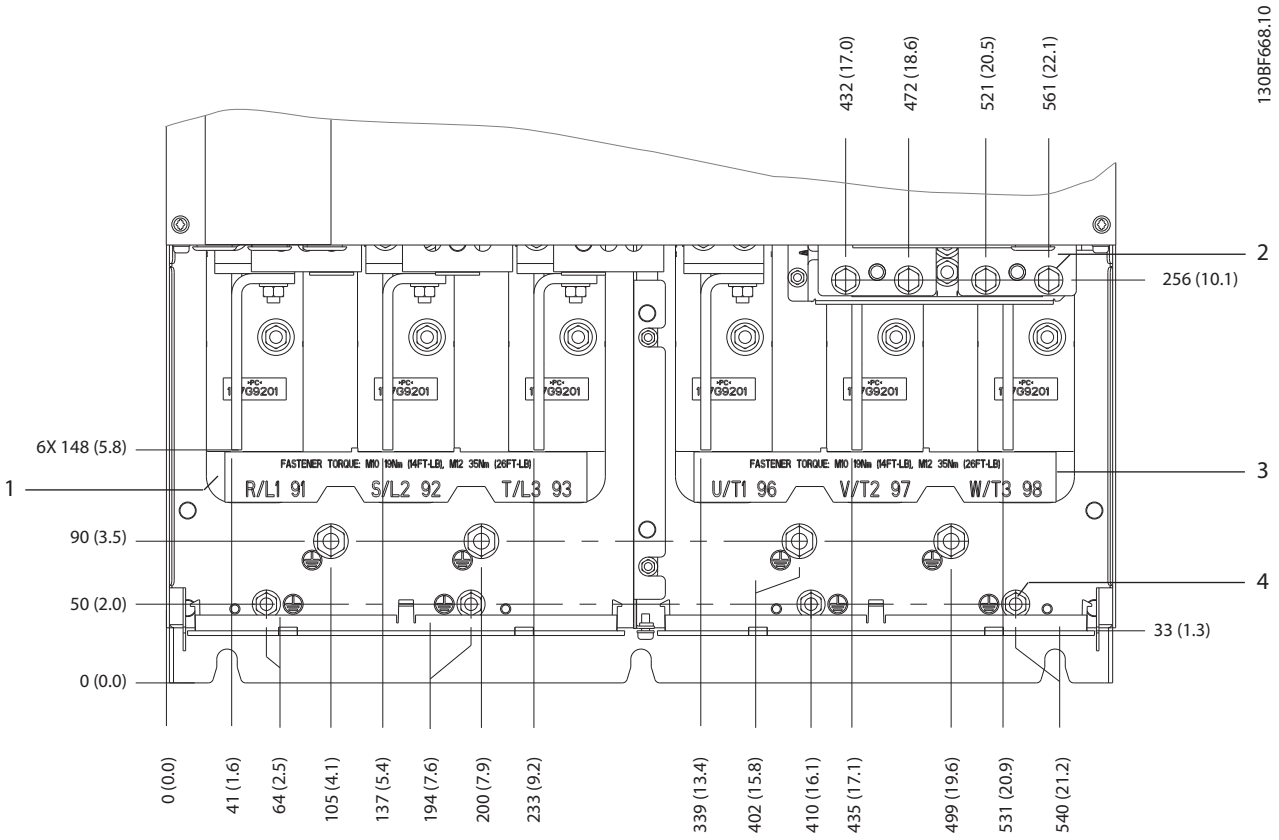

1	Mains terminals	3	Motor terminals
2	Brake or regeneration terminals	4	Ground terminals, M8 and M10 nuts

Illustration 5.13 E4h Terminal Dimensions (Front View)

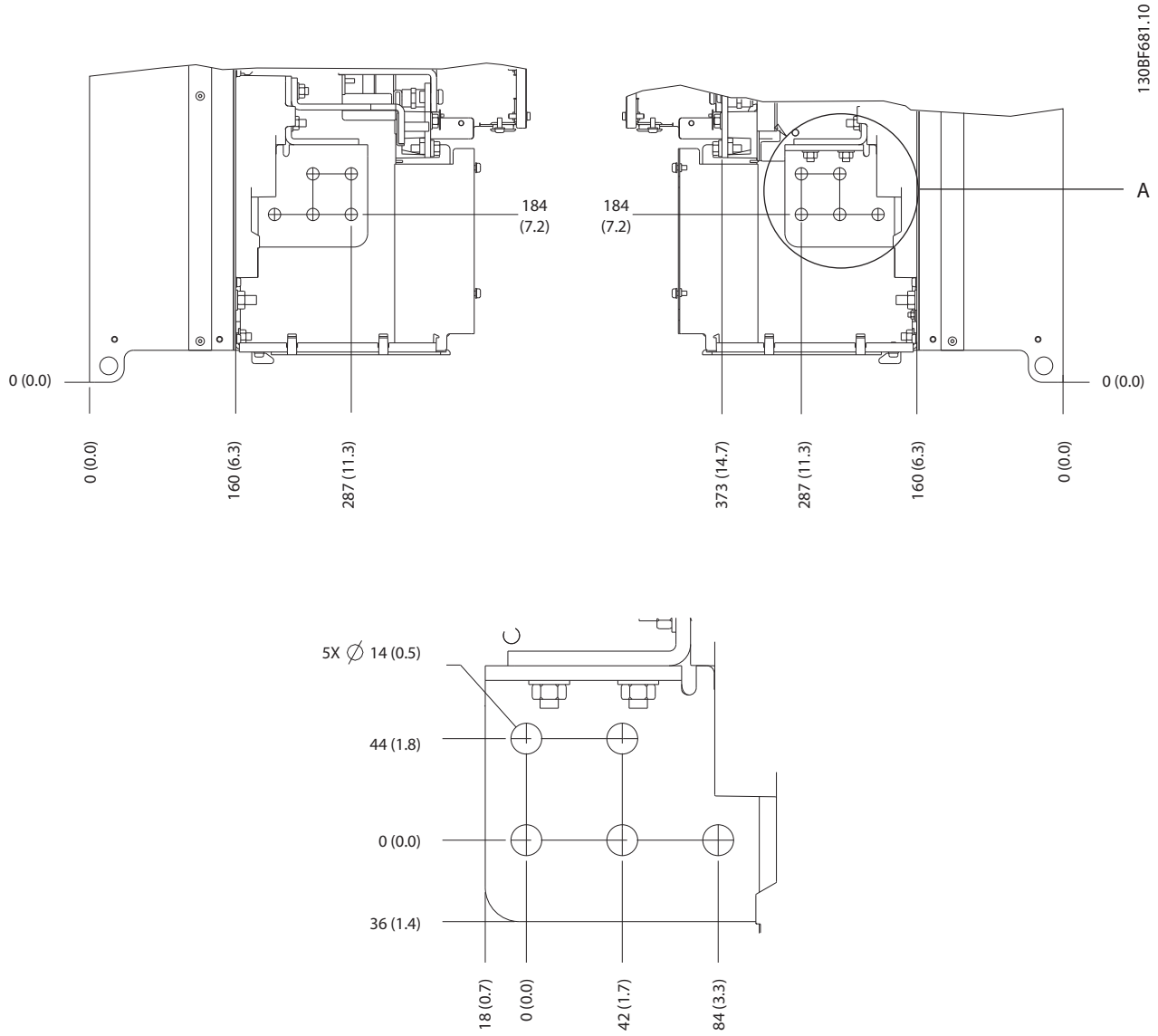

Illustration 5.14 E4h Mains, Motor, and Ground Terminal Dimensions (Side Views)

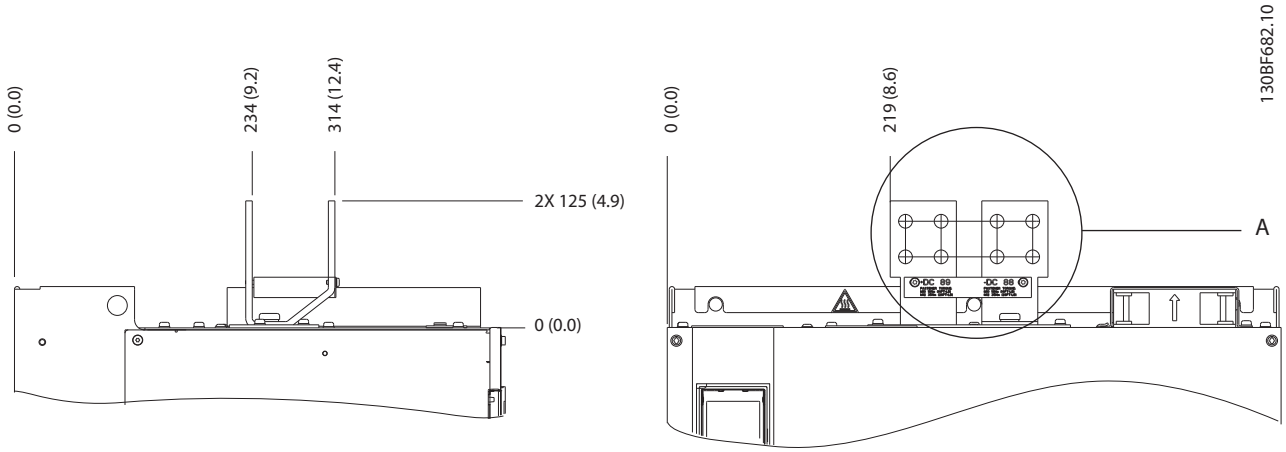

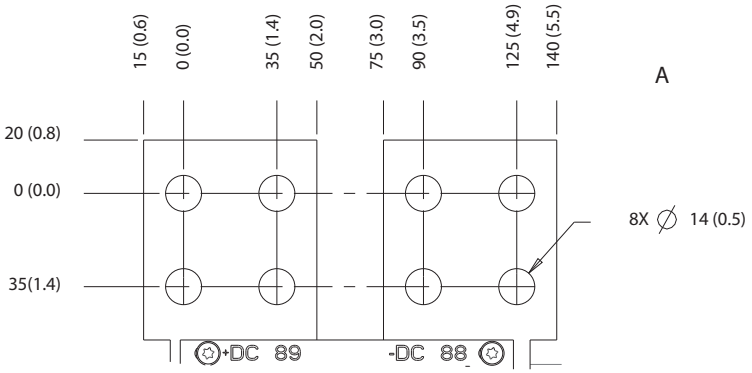

Illustration 5.15 E4h Load Share/Regeneration Terminal Dimensions

5.8 Control Wiring

All terminals to the control cables are inside the drive below the LCP. To access, either open the door (E1h and E2h) or remove the front panel (E3h and E4h).

5.8.1 Control Cable Routing

Tie down and route all control wires as shown in *Illustration 5.16*. Remember to connect the shields in a proper way to ensure optimum electrical immunity.

- Isolate control wiring from high-power cables in the drive.
- When the drive is connected to a thermistor, ensure that the thermistor control wiring is shielded and reinforced/double insulated. A 24 V DC supply voltage is recommended.

Fieldbus connection
Connections are made to the relevant options on the control card. For more detail, see the relevant fieldbus instruction. The cable must be tied down and routed along with other control wires inside the unit. See *Illustration 5.16*.

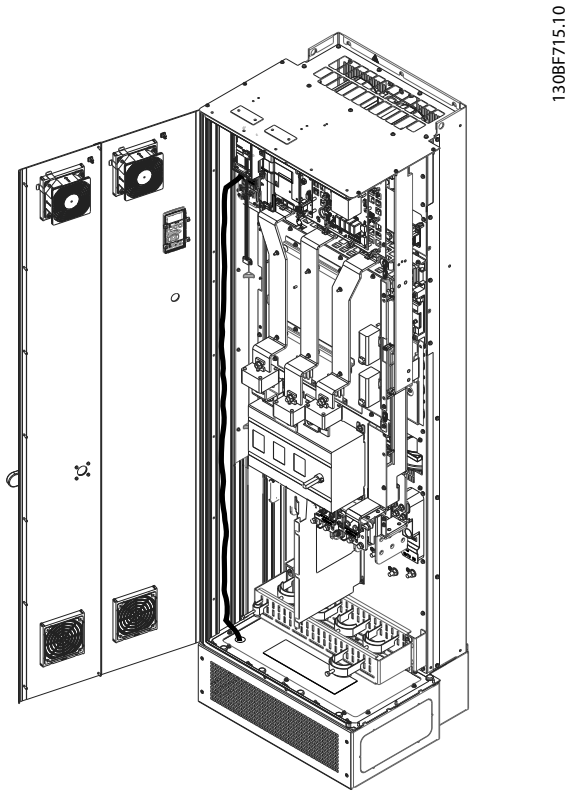

Illustration 5.16 Control Card Wiring Path

5.8.2 Control Terminal Types

Illustration 5.17 shows the removable drive connectors. Terminal functions and default settings are summarized in *Table 5.1 – Table 5.3*.

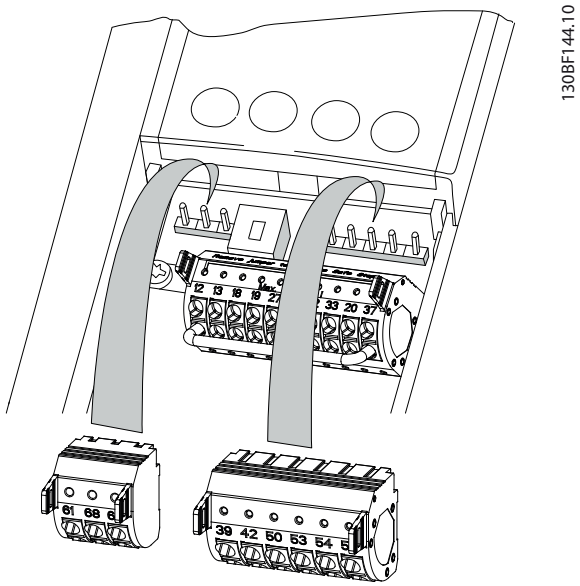

Illustration 5.17 Control Terminal Locations

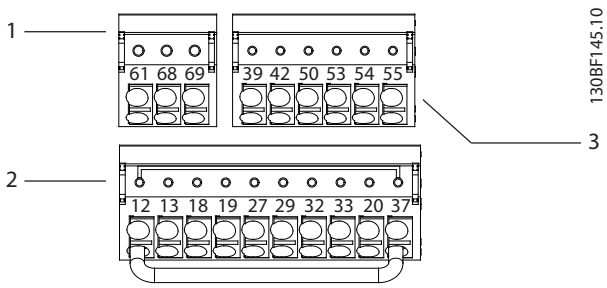

1	Serial communication terminals
2	Digital input/output terminals
3	Analog input/output terminals

Illustration 5.18 Terminal Numbers Located on the Connectors

Terminal	Parameter	Default setting	Description
61	–	–	Integrated RC-filter for cable shield. ONLY for connecting the shield in the event of EMC problems.

Terminal	Parameter	Default setting	Description
68 (+)	*Parameter group 8-3* FC Port Settings*	–	RS485 interface. A switch (BUS TER.) is provided on the control card for bus termination resistance. See *Illustration 5.23*.
69 (-)	*Parameter group 8-3* FC Port Settings*	–	

Table 5.1 Serial Communication Terminal Descriptions

Digital input/output terminals			
Terminal	**Parameter**	**Default setting**	**Description**
12, 13	–	+24 V DC	24 V DC supply voltage for digital inputs and external transducers. Maximum output current 200 mA for all 24 V loads.
18	*Parameter 5-10 Terminal 18 Digital Input*	*[8] Start*	Digital inputs.
19	*Parameter 5-11 Terminal 19 Digital Input*	*[10] Reversing*	
32	*Parameter 5-14 Terminal 32 Digital Input*	*[0] No operation*	
33	*Parameter 5-15 Terminal 33 Digital Input*	*[0] No operation*	
27	*Parameter 5-12 Terminal 27 Digital Input*	*[2] Coast inverse*	For digital input or output. Default setting is input.
29	*Parameter 5-13 Terminal 29 Digital Input*	*[14] JOG*	
20	–	–	Common for digital inputs and 0 V potential for 24 V supply.
37	–	STO	When not using the optional STO feature, a jumper wire is required between terminal 12 (or 13) and terminal 37. This set-up allows the drive to operate with factory default programming values.

Table 5.2 Digital Input/Output Terminal Descriptions

Analog input/output terminals			
Terminal	**Parameter**	**Default setting**	**Description**
39	–	–	Common for analog output.
42	*Parameter 6-50 Terminal 42 Output*	*[0] No operation*	Programmable analog output. 0–20 mA or 4–20 mA at a maximum of 500 Ω.
50	–	+10 V DC	10 V DC analog supply voltage for potentiometer or thermistor. 15 mA maximum.
53	*Parameter group 6-1* Analog Input 1*	Reference	Analog input. For voltage or current. Switches A53 and A54 select mA or V.
54	*Parameter group 6-2* Analog Input 2*	Feedback	
55	–	–	Common for analog input.

Table 5.3 Analog Input/Output Terminal Descriptions

5.8.3 Relay Terminals

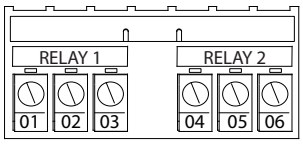

130BF156.10

Illustration 5.19 Relay 1 and Relay 2 Terminals

- Relay 1 and relay 2. The location of the outputs depends on the drive configuration. See *chapter 3.5 Control Shelf*.
- Terminals on built-in optional equipment. See the manual provided with the equipment option.

Terminal	Parameter	Default setting	Description
01, 02, 03	*Parameter 5-40 Function Relay* [0]	*[0] No operation*	Form C relay output. For AC or DC voltage and resistive or inductive loads.
04, 05, 06	*Parameter 5-40 Function Relay* [1]	*[0] No operation*	

Table 5.4 Relay Terminal Descriptions

5.8.4 Wiring to Control Terminals

The control terminals are located near the LCP. The control terminal connectors can be unplugged from the drive for convenience when wiring, as shown in *Illustration 5.17*. Either solid or flexible wire can be connected to the control terminals. Use the following procedures to connect or disconnect the control wires.

NOTICE

Minimize interference by keeping control wires as short as possible and separate from high-power cables.

5

Connecting wire to control terminals

1. Strip 10 mm (0.4 in) of the outer plastic layer from the end of the wire.
2. Insert the control wire into the terminal.
   - For a solid wire, push the bare wire into the contact. See *Illustration 5.20*.
   - For a flexible wire, open the contact by inserting a small screwdriver into the slot between the terminal holes and push the screwdriver inward. See *Illustration 5.21* Then, insert the stripped wire into the contact and remove the screwdriver.
3. Pull gently on the wire to ensure that the contact is firmly established and not loose. Loose control wiring can be the source of equipment faults or reduced performance.

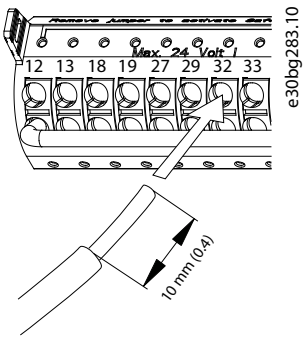

Illustration 5.20 Connecting Solid Control Wires

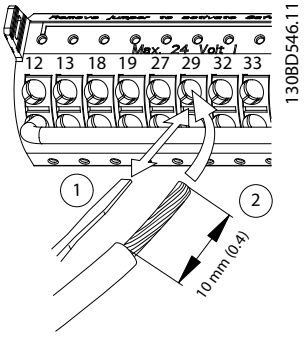

Illustration 5.21 Connecting Flexible Control Wires

Disconnecting wires from the control terminals

1. To open the contact, insert a small screwdriver into the slot between the terminal holes and push the screwdriver inward.
2. Pull gently on the wire to free it from the control terminal contact.

See *chapter 9.1 Electrical Data* for control terminal wiring sizes and *chapter 7 Wiring Configuration Examples* for typical control wiring connections.

5.8.5 Enabling Motor Operation (Terminal 27)

A jumper wire is required between terminal 12 (or 13) and terminal 27 for the drive to operate when using factory default programming values.

- Digital input terminal 27 is designed to receive 24 V DC external interlock command.
- When no interlock device is used, wire a jumper between control terminal 12 (recommended) or 13 to terminal 27. This wire provides an internal 24 V signal on terminal 27.
- When the status line at the bottom of the LCP reads *AUTO REMOTE COAST*, the unit is ready to operate, but is missing an input signal on terminal 27.
- When factory-installed optional equipment is wired to terminal 27, do not remove that wiring.

NOTICE

The drive cannot operate without a signal on terminal 27, unless terminal 27 is reprogrammed using *parameter 5-12 Terminal 27 Digital Input*.

5.8.6 Configuring RS485 Serial Communication

RS485 is a 2-wire bus interface compatible with multi-drop network topology, and it contains the following features:

- Either Danfoss FC or Modbus RTU communication protocol, which are internal to the drive, can be used.
- Functions can be programmed remotely using the protocol software and RS485 connection or in *parameter group 8-** Communications and Options*.
- Selecting a specific communication protocol changes various default parameter settings to match the specifications of the protocol, making more protocol-specific parameters available.
- Option cards for the drive are available to provide more communication protocols. See the option card documentation for installation and operation instructions.
- A switch (BUS TER) is provided on the control card for bus termination resistance. See *Illustration 5.23*.

For basic serial communication set-up, perform the following steps:

1. Connect RS485 serial communication wiring to terminals (+)68 and (-)69.
   - 1a Use shielded serial communication cable (recommended).
   - 1b See *chapter 5.6 Connecting to Ground* for proper grounding.
2. Select the following parameter settings:
   - 2a Protocol type in *parameter 8-30 Protocol*.
   - 2b Drive address in *parameter 8-31 Address*.
   - 2c Baud rate in *parameter 8-32 Baud Rate*.

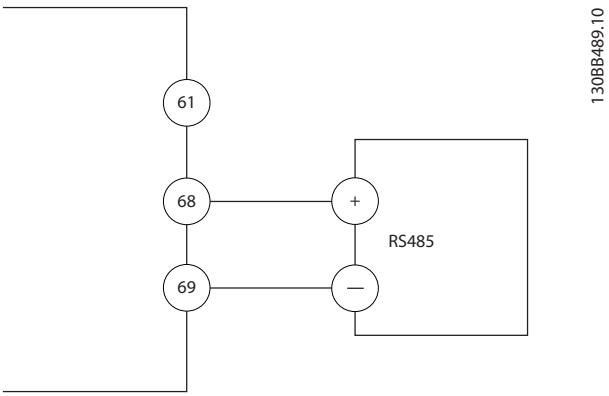

Illustration 5.22 Serial Communication Wiring Diagram

5.8.7 Wiring Safe Torque Off (STO)

The Safe Torque Off (STO) function is a component in a safety control system. STO prevents the unit from generating the voltage required to rotate the motor.

To run STO, more wiring for the drive is required. Refer to *Safe Torque Off Operating Guide* for further information.

5.8.8 Wiring the Space Heater

The space heater is an option used to prevent condensation from forming inside the enclosure when the unit is turned off. It is designed to be field wired and controlled by an HVAC management system.

Specifications

- Nominal voltage: 100–240
- Wire size: 12–24 AWG

5.8.9 Wiring the Auxiliary Contacts to the Disconnect

The disconnect is an option that is installed at the factory. The auxiliary contacts, which are signal accessories used with the disconnect, are not installed at the factory to allow more flexibility during installation. The contacts snap into place without the need for tools.

Contacts must be installed in specific locations on the disconnect depending upon their functions. Refer to the datasheet included in the accessory bag that comes with the drive.

Specifications

- U_i/[V]: 690
- U_{imp}/[kV]: 4
- Pollution degree: 3
- I_{th}/[A]: 16
- Cable size: 1...2x0.75...2.5 mm^2
- Maximum fuse: 16 A/gG
- NEMA: A600, R300, wire size: 18–14 AWG, 1(2)

5.8.10 Wiring the Brake Resistor Temperature Switch

The brake resistor terminal block is located on the power card and allows for the connection of an external brake resistor temperature switch. The switch can be configured as normally closed or normally open. If the input changes, a signal trips the drive and shows *alarm 27, Brake chopper fault* on the LCP display. At the same time, the drive stops braking and the motor coasts.

1. Locate the brake resistor terminal block (terminals 104–106) on the power card. See *Illustration 3.3*.
2. Remove the M3 screws that hold the jumper to the power card.
3. Remove the jumper and wire the brake resistor temperature switch in 1 of the following configurations:
   - 3a **Normally closed**. Connect to terminals 104 and 106.
   - 3b **Normally open**. Connect to terminals 104 and 105.
4. Secure the switch wires with the M3 screws. Torque to 0.5-0.6 Nm (5 in-lb).

5.8.11 Selecting Voltage/Current Input Signal

The analog input terminals 53 and 54 allow setting of input signal to voltage (0–10 V) or current (0/4–20 mA).

Default parameter setting:

- Terminal 53: Speed reference signal in open loop (see *parameter 16-61 Terminal 53 Switch Setting*).
- Terminal 54: Feedback signal in closed loop (see *parameter 16-63 Terminal 54 Switch Setting*).

NOTICE

Disconnect power to the drive before changing switch positions.

1. Remove the LCP (local control panel). See *chapter 6.3 LCP Menu*.
2. Remove any optional equipment covering the switches.
3. Set switches A53 and A54 to select the signal type (U = voltage, I = current).

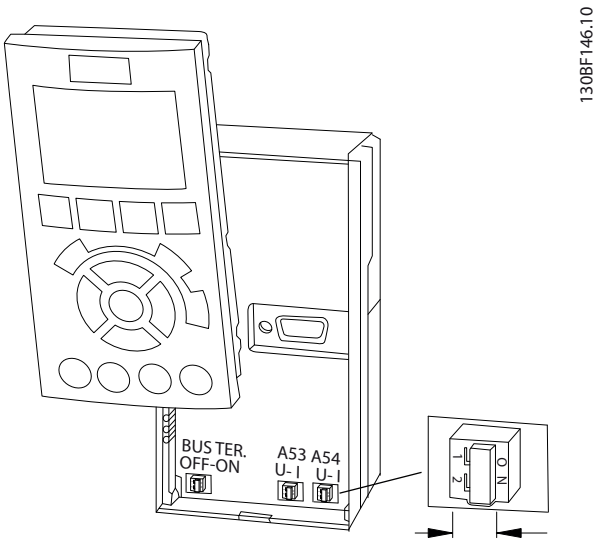

Illustration 5.23 Location of Terminal 53 and 54 Switches

5.9 Pre-start Check List

Before completing installation of the unit, inspect the entire installation as detailed in *Table 5.5*. Check and mark the items when completed.

Inspect for	Description	☑
Motor	• Confirm continuity of the motor by measuring ohm values on U–V (96–97), V–W (97–98), and W–U (98–96). • Confirm that the supply voltage matches the voltage of the drive and the motor.	
Switches	• Ensure that all switch and disconnect settings are in the proper positions.	
Auxiliary equipment	• Look for auxiliary equipment, switches, disconnects, or input fuses/circuit breakers that reside on the input power side of the drive or output side to the motor. Ensure that they are ready for full-speed operation. • Check function and installation of any sensors used for feedback to the drive. • Remove any power factor correction caps on motor. • Adjust any power factor correction caps on the mains side and ensure that they are dampened.	
Cable routing	• Ensure that motor wiring, brake wiring (if equipped), and control wiring are separated or shielded, or in 3 separate metallic conduits for high-frequency interference isolation.	
Control wiring	• Check for broken or damaged wires and loose connections. • Check that control wiring is isolated from high-power wiring for noise immunity. • Check the voltage source of the signals, if necessary. • Use shielded cable or twisted pair and ensure that the shield is terminated correctly.	
Input and output power wiring	• Check for loose connections. • Check that motor and mains are in separate conduit or separated shielded cables.	
Grounding	• Check for good ground connections that are tight and free of oxidation. • Grounding to conduit, or mounting the back panel to a metal surface, is not a suitable grounding.	
Fuses and circuit breakers	• Check for proper fusing or circuit breakers. • Check that all fuses are inserted firmly and are in operational condition and that all circuit breakers (if used) are in the open position.	
Cooling clearance	• Look for any obstructions in the airflow path. • Measure top and bottom clearance of the drive to verify adequate airflow for cooling, see *chapter 4.5.1 Installation and Cooling Requirements*.	
Ambient conditions	• Check that requirements for ambient conditions are met. See *chapter 9.4 Ambient Conditions*.	
Interior of the drive	• Inspect that the unit interior is free of dirt, metal chips, moisture, and corrosion. • Verify that all installation tools have been removed from unit interior. • For E3h and E4h enclosures, ensure that the unit is mounted on an unpainted, metal surface.	
Vibration	• Check that the unit is mounted solidly, or that shock mounts are used, if necessary. • Check for an unusual amount of vibration.	

Table 5.5 Pre-start Check List

⚠CAUTION

POTENTIAL HAZARD IN THE EVENT OF INTERNAL FAILURE

If the drive is not properly secured with covers, personal injury can occur.

- **Before applying power, ensure all safety covers (door and panels) are in place and securely fastened. Refer to *chapter 9.10.1 Fastener Torque Ratings*.**

6 Commissioning

6.1 Safety Instructions

See *chapter 2 Safety* for general safety instructions.

⚠WARNING

HIGH VOLTAGE

Drives contain high voltage when connected to AC mains input power. Failure to use qualified personnel to install, start up, and maintain the drive can result in death or serious injury.

- **Only qualified personnel must install, start up, and maintain the drive.**

Before applying power:

1. Ensure that input power to the unit is OFF and locked out. Do not rely on the drive disconnect switches for input power isolation.
2. Verify that there is no voltage on input terminals L1 (91), L2 (92), and L3 (93), phase-to-phase, and phase-to-ground.
3. Verify that there is no voltage on output terminals 96 (U), 97 (V), and 98 (W), phase-to-phase, and phase-to-ground.
4. Confirm continuity of the motor by measuring ohm values on U–V (96–97), V–W (97–98), and W–U (98–96).
5. Check for proper grounding of the drive and the motor.
6. Inspect the drive for loose connections on the terminals.
7. Check that all cable glands are firmly tightened.
8. Confirm that the supply voltage matches the voltage of the drive and the motor.
9. Close and securely fasten the front cover.

6.2 Applying Power

⚠WARNING

UNINTENDED START

When the drive is connected to AC mains, DC supply, or load sharing, the motor may start at any time, causing risk of death, serious injury, and equipment, or property damage. The motor may start by activation of an external switch, a fieldbus command, an input reference signal from the LCP or LOP, via remote operation using MCT 10 Set-up software, or after a cleared fault condition.

To prevent unintended motor start:

- **Press [Off] on the LCP before programming parameters.**
- **Disconnect the drive from mains whenever personal safety considerations make it necessary to avoid unintended motor start.**
- **Check that the drive, motor, and any driven equipment is in operational readiness.**

1. Confirm that the input voltage between phases is balanced within 3%. If not, correct input voltage imbalance before proceeding. Repeat this procedure after the voltage correction.
2. Ensure that optional equipment wiring, if present, matches the installation application.
3. Ensure that all operator devices are in the OFF position.
4. Close all panel doors and securely fasten all covers.
5. Apply power to the unit. DO NOT start the drive now. For units with a disconnect switch, turn to the ON position to apply power to the drive.

NOTICE

If the status line at the bottom of the LCP reads AUTO REMOTE COASTING or *alarm 60, External Interlock* is shown, this status indicates that the unit is ready to operate but is missing an input signal on terminal 27. See *chapter 5.8.5 Enabling Motor Operation (Terminal 27)* for details.

6.3 LCP Menu

6.3.1.1 Quick Menu Mode

The Quick Menus mode provides a list of menus used to configure and operate the drive. Select the Quick Menus mode by pressing the [Quick Menus] key. The resulting readout appears on the LCP display.

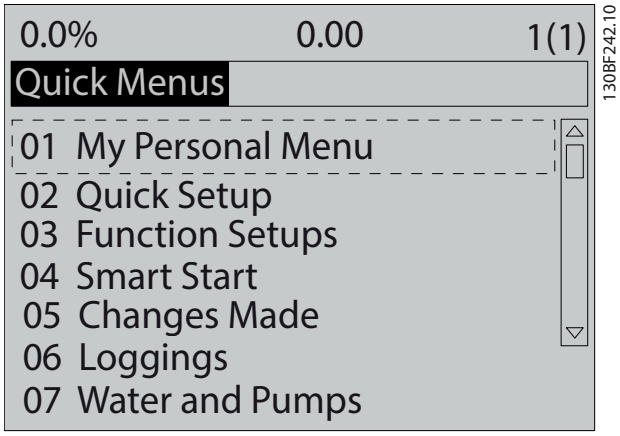

Illustration 6.1 Quick Menu View

6.3.1.2 Q1 My Personal Menu

The Personal Menu is used to determine what is shown in the display area. Refer to *chapter 3.6 Local Control Panel (LCP)*. This menu can also show up to 50 pre-programmed parameters. These 50 parameters are manually entered using *parameter 0-25 My Personal Menu*.

6.3.1.3 Q2 Quick Setup

The parameters found in the *Q2 Quick Setup* contain basic system and motor data that are always necessary for configuring the drive. See *chapter 6.4.2 Entering System Information* for the set-up procedures.

6.3.1.4 Q3 Function Setups

The parameters found in the *Q3 Function Setups* contain data for fan, compressor, and pump functions. This menu also includes parameters for LCP display, digital preset speeds, scaling of analog references, closed-loop single zone, and multizone applications.

6.3.1.5 Q4 Smart Start

Q4 Smart Setup guides the user through typical parameter settings used to configure the motor and selected pump/fan application. The [Info] key can be used to display help information for various selections, settings, and messages.

6.3.1.6 Q5 Changes Made

Select *Q5 Changes Made* for information about:

- The 10 most recent changes.
- Changes made from default setting.

6.3.1.7 Q6 Loggings

Use *Q6 Loggings* for fault finding. To get information about the display line readout, select *Loggings*. The information is shown as graphs. Only parameters selected in *parameter 0-20 Display Line 1.1 Small* through *parameter 0-24 Display Line 3 Large* can be viewed. It is possible to store up to 120 samples in the memory for later reference.

Q6 Loggings	
Parameter 0-20 Display Line 1.1 Small	Reference [Unit]
Parameter 0-21 Display Line 1.2 Small	Analog Input 53 [V]
Parameter 0-22 Display Line 1.3 Small	Motor current [A]
Parameter 0-23 Display Line 2 Large	Frequency [Hz]
Parameter 0-24 Display Line 3 Large	Feedback [Unit]

Table 6.1 Logging Parameter Examples

6.3.1.8 Q7 Water and Pumps

The parameters found in the *Q7 Water and Pumps* contain basic data that is necessary for configuring water pump applications.

6.3.1.9 Main Menu Mode

The *Main Menu* mode lists all the parameter groups available to the drive. Select the Main Menu mode by pressing the [Main Menu] key. The resulting readout appears on the LCP display.

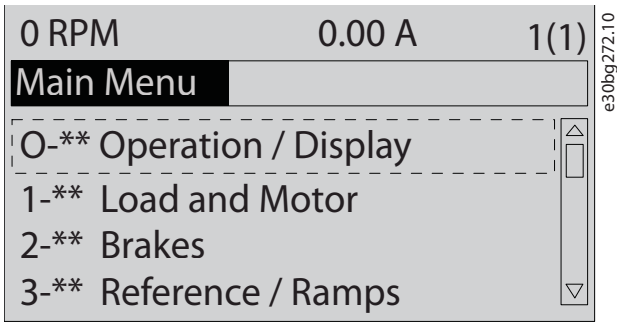

Illustration 6.2 Main Menu View

All parameters can be changed in the main menu. Option cards added to the unit enable extra parameters associated with the option device.

6.4 Programming the Drive

For detailed information on the key functions on the local control panel (LCP), see *chapter 3.6 Local Control Panel (LCP)*. For information on parameter settings, see the *programming guide*.

Parameter overview

Parameter settings control the operation of the drive, and are accessed via the LCP. These settings are assigned a default value at the factory, but can be configured for their unique application. Each parameter has a name and number that remain the same regardless of the programming mode.

In the *Main Menu* mode, the parameters are divided into groups. The first digit of the parameter number (from the left) indicates the parameter group number. The parameter group is then broken down into subgroups, if necessary. For example:

*0-** Operation/Display*	Parameter group
0-0 Basic Settings*	Parameter subgroup
Parameter 0-01 Language	Parameter
Parameter 0-02 Motor Speed Unit	Parameter
Parameter 0-03 Regional Settings	Parameter

Table 6.2 Example of Parameter Group Hierarchy

Moving around parameters

Navigate through the parameters using the following LCP keys:

- Press [▲] [▼] to scroll up or down.
- Press [◄] [►] to shift a space to the left or right of a decimal point while editing a decimal parameter value.
- Press [OK] to accept the change.
- Press [Cancel] to disregard the change and exit edit mode.
- Press [Back] twice to show the status view.
- Press [Main Menu] once to go back to the main menu.

6.4.1 Programming Example for an Open-loop Application

This procedure, which is used to configure a typical open-loop application, programs the drive to receive a 0–10 V DC analog control signal on input terminal 53. The drive responds by providing 20–50 Hz output to the motor proportional to the input signal (0–10 V DC=20–50 Hz).

Press [Quick Menu] and complete the following steps:

1. Select *Q3 Function Setups* and press [OK].
2. Select *Parameter Data Set* and press [OK].

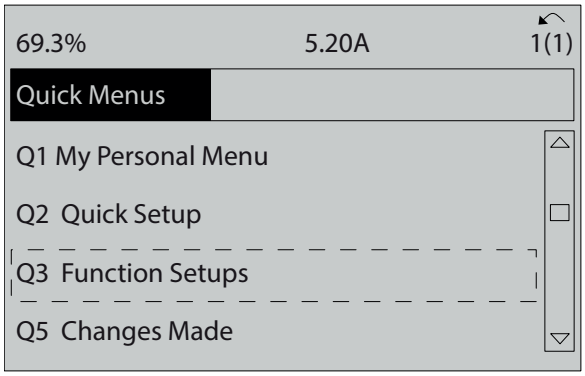

Illustration 6.3 Q3 Function Setups

3. Select *Q3-2 Open Loop Settings* and press [OK].

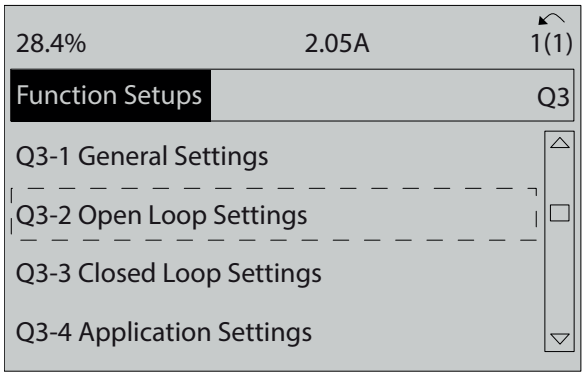

Illustration 6.4 Q3-2 Open Loop Settings

4. Select *Q3-21 Analog Reference* and press [OK].

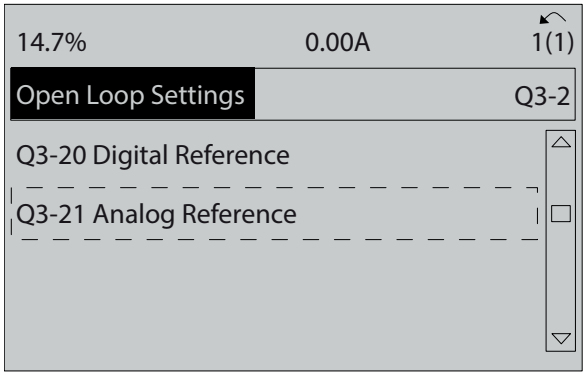

Illustration 6.5 Q3-21 Analog Reference

5. Select *parameter 3-02 Minimum Reference*. Set the minimum internal drive reference to 0 Hz and press [OK].

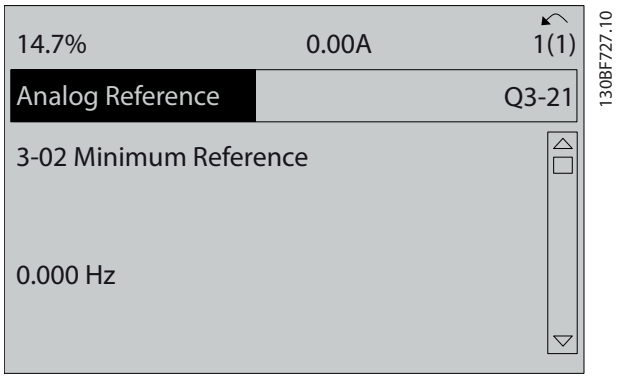

Illustration 6.6 ***Parameter 3-02 Minimum Reference***

6. Select *parameter 3-03 Maximum Reference*. Set the maximum internal drive reference to 60 Hz and press [OK].

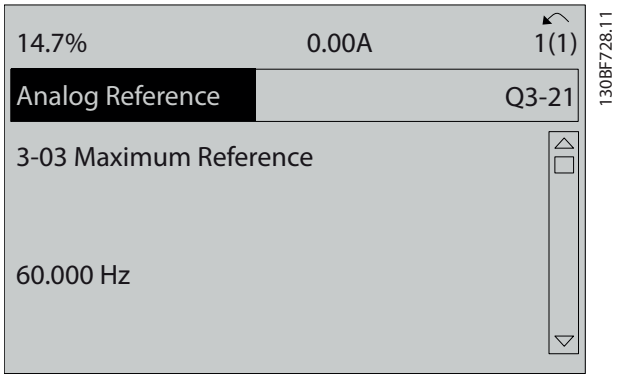

Illustration 6.7 ***Parameter 3-03 Maximum Reference***

7. Select *parameter 6-10 Terminal 53 Low Voltage*. Set the minimum external voltage reference on terminal 53 at 0 V and press [OK].

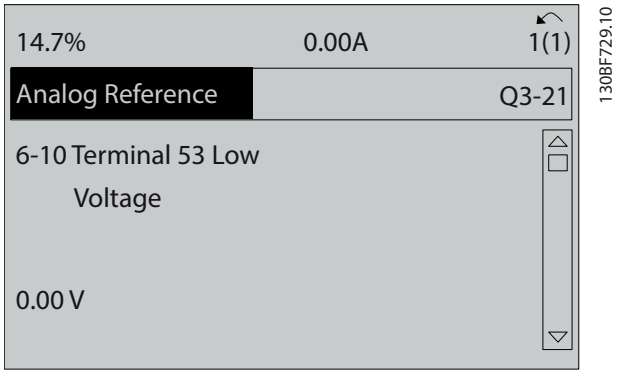

Illustration 6.8 ***Parameter 6-10 Terminal 53 Low Voltage***

8. Select *parameter 6-11 Terminal 53 High Voltage*. Set maximum external voltage reference on terminal 53 at 10 V and press [OK].

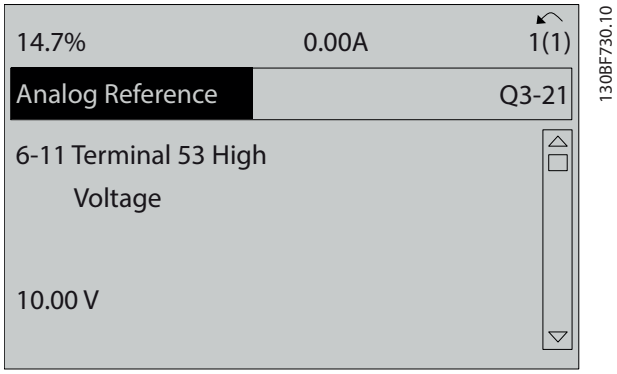

Illustration 6.9 ***Parameter 6-11 Terminal 53 High Voltage***

9. Select *parameter 6-14 Terminal 53 Low Ref./Feedb. Value*. Set minimum speed reference on terminal 53 at 20 Hz and press [OK].

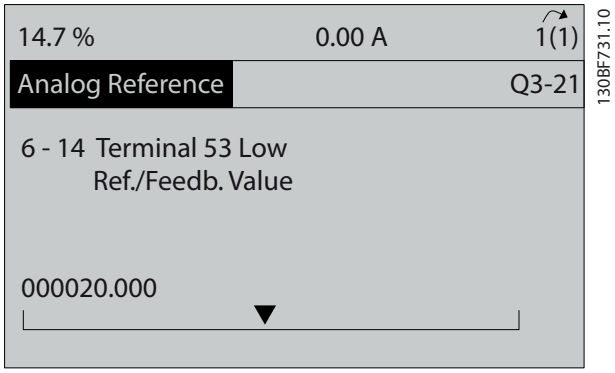

Illustration 6.10 ***Parameter 6-14 Terminal 53 Low Ref./Feedb. Value***

10. Select *parameter 6-15 Terminal 53 High Ref./Feedb. Value*. Set maximum speed reference on terminal 53 at 50 Hz and press [OK].

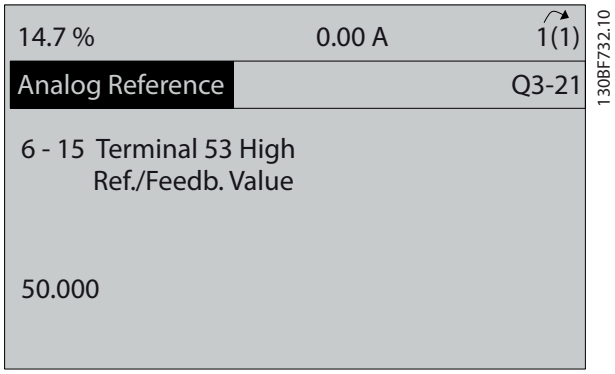

Illustration 6.11 ***Parameter 6-15 Terminal 53 High Ref./Feedb. Value***

With an external device providing a 0–10 V control signal connected to drive terminal 53, the system is now ready for operation.

NOTICE

In *Illustration 6.11*, the scroll bar on the right of the display is at the bottom. This position indicates the procedure is complete.

Illustration 6.12 shows the wiring connections used to enable the external device set up.

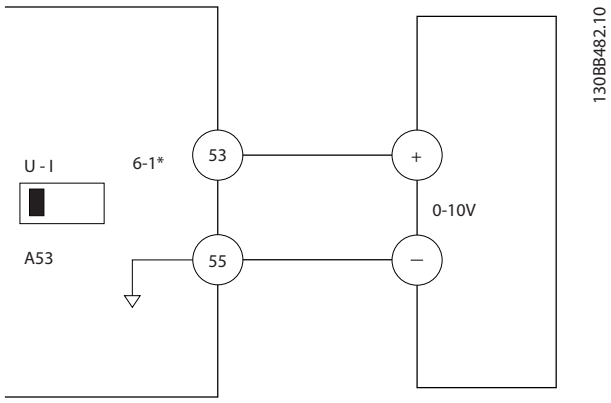

Illustration 6.12 Wiring Example for External Device Providing 0–10 V Control Signal

6.4.2 Entering System Information

NOTICE

SOFTWARE DOWNLOAD

For commissioning via PC, install MCT 10 Set-up Software. The software is available for download (basic version) or for ordering (advanced version, code number 130B1000). For more information and downloads, see *www.danfoss.com/en/service-and-support/downloads/dds/vlt-motion-control-tool-mct-10/*.

The following steps are used to enter basic system information into the drive. Recommended parameter settings are intended for start-up and checkout purposes. Application settings vary.

NOTICE

Although these steps assume that an asynchronous motor is used, a permanent magnet motor can be used. For more information on specific motor types, see the product-specific *programming guide*.

1. Press [Main Menu] on the LCP.
2. Select *0-** Operation/Display* and press [OK].
3. Select *0-0* Basic Settings* and press [OK].
4. Select *parameter 0-03 Regional Settings* and press [OK].
5. Select *[0] International* or *[1] North America* as appropriate and press [OK]. (This action changes the default settings for some basic parameters).
6. Press [Quick Menus] on the LCP and then select *02 Quick Setup*.
7. Change the following parameters settings listed in *Table 6.3* if necessary. The motor data is found on the motor nameplate.

Parameter	Default setting
Parameter 0-01 Language	English
Parameter 1-20 Motor Power [kW]	4.00 kW
Parameter 1-22 Motor Voltage	400 V
Parameter 1-23 Motor Frequency	50 Hz
Parameter 1-24 Motor Current	9.00 A
Parameter 1-25 Motor Nominal Speed	1420 RPM
Parameter 5-12 Terminal 27 Digital Input	Coast inverse
Parameter 3-02 Minimum Reference	0.000 RPM
Parameter 3-03 Maximum Reference	1500.000 RPM
Parameter 3-41 Ramp 1 Ramp up Time	3.00 s
Parameter 3-42 Ramp 1 Ramp Down Time	3.00 s
Parameter 3-13 Reference Site	Linked to Hand/Auto
Parameter 1-29 Automatic Motor Adaptation (AMA)	Off

Table 6.3 Quick Setup Settings

NOTICE

MISSING INPUT SIGNAL

When the LCP shows AUTO REMOTE COASTING or *alarm 60, External Interlock*, the unit is ready to operate but is missing an input signal. See *chapter 5.8.5 Enabling Motor Operation (Terminal 27)* for details.

6.4.3 Configuring Automatic Energy Optimization

Automatic energy optimization (AEO) is a procedure that minimizes voltage to the motor, reducing energy consumption, heat, and noise.

1. Press [Main Menu].
2. Select *1-** Load and Motor* and press [OK].
3. Select *1-0* General Settings* and press [OK].
4. Select *parameter 1-03 Torque Characteristics* and press [OK].
5. Select either *[2] Auto Energy Optim CT* or *[3] Auto Energy Optim VT* and press [OK].

6.4.4 Configuring Automatic Motor Adaptation

Automatic motor adaptation is a procedure that optimizes compatibility between the drive and the motor.

The drive builds a mathematical model of the motor for regulating output motor current. The procedure also tests the input phase balance of electrical power. It compares the motor characteristics with the data entered in *parameters 1-20* to *1-25*.

NOTICE

If warnings or alarms occur, see *chapter 8.5 List of Warnings and Alarms*. Some motors are unable to run the complete version of the test. In that case, or if an output filter is connected to the motor, select *[2] Enable reduced AMA*.

Run this procedure on a cold motor for best results.

1. Press [Main Menu].
2. Select *1-** Load and Motor* and press [OK].
3. Select *1-2* Motor Data* and press [OK].
4. Select *parameter 1-29 Automatic Motor Adaptation (AMA)* and press [OK].
5. Select *[1] Enable complete AMA* and press [OK].
6. Press [Hand On] and then [OK].
   The test runs automatically and indicates when it is complete.

6.5 Testing Before System Start-up

WARNING

MOTOR START

Failure to ensure that the motor, system, and any attached equipment are ready for start can result in personal injury or equipment damage. Before start,

- **Ensure that equipment is safe to operate under any condition.**
- **Ensure that the motor, system, and any attached equipment are ready for start.**

6.5.1 Motor Rotation

NOTICE

If the motor runs in the wrong direction, it can damage equipment. Before running the unit, check the motor rotation by briefly running the motor. The motor runs briefly at either 5 Hz or the minimum frequency set in *parameter 4-12 Motor Speed Low Limit [Hz]*.

1. Press [Hand On].
2. Move the left cursor to the left of the decimal point by using the left arrow key, and enter an RPM that slowly rotates the motor.
3. Press [OK].
4. If the motor rotation is wrong, set *parameter 1-06 Clockwise Direction* to *[1] Inverse*.

6.5.2 Encoder Rotation

If encoder feedback is used, perform the following steps:

1. Select *[0] Open Loop* in *parameter 1-00 Configuration Mode*.
2. Select *[1] 24 V encoder* in *parameter 7-00 Speed PID Feedback Source*.
3. Press [Hand On].
4. Press [►] for positive speed reference (*parameter 1-06 Clockwise Direction* at *[0] Normal*).
5. In *parameter 16-57 Feedback [RPM]*, check that the feedback is positive.

For more information on the encoder option, refer to the option manual.

NOTICE

NEGATIVE FEEDBACK

If the feedback is negative, the encoder connection is wrong. Use either *parameter 5-71 Term 32/33 Encoder Direction* or *parameter 17-60 Feedback Direction* to inverse the direction, or reverse the encoder cables. *Parameter 17-60 Feedback Direction* is only available with the VLT® Encoder Input MCB 102 option.

6.6 System Start-up

WARNING

MOTOR START

Failure to ensure that the motor, system, and any attached equipment are ready for start can result in personal injury or equipment damage. Before start,

- **Ensure that equipment is safe to operate under any condition.**
- **Ensure that the motor, system, and any attached equipment are ready for start.**

The procedure in this section requires user-wiring and application programming to be completed. The following procedure is recommended after application set-up is completed.

1. Press [Auto On].
2. Apply an external run command.
   Examples of external run commands are a switch, button, or programmable logic controller (PLC).
3. Adjust the speed reference throughout the speed range.
4. Ensure that the system is working as intended by checking sound and vibration level of the motor.
5. Remove the external run command.

If warnings or alarms occur, see *chapter 8.5 List of Warnings and Alarms*.

6.7 Parameter Settings

NOTICE

REGIONAL SETTINGS

Some parameters have different default settings for international or North America. For a list of the different default values, see *chapter 10.2 International/North American Default Parameter Settings*.

Establishing the correct programming for applications requires setting several parameter functions. Details for parameters are provided in the *programming guide*.

Parameter settings are stored internally in the drive, allowing the following advantages:

- Parameter settings can be uploaded into the LCP memory and stored as a back-up.
- Multiple units can be programmed quickly by connecting the LCP to the unit and downloading the stored parameter settings.
- Settings that are stored in the LCP are not changed when restoring factory default settings.
- Changes made to default settings as well as any programming entered into parameters are stored and available for viewing in the quick menu. See *chapter 6.3 LCP Menu*.

6.7.1 Uploading and Downloading Parameter Settings

The drive operates using parameters stored on the control card, which is located within the drive. The upload and download functions move the parameters between the control card and the LCP.

1. Press [Off].
2. Go to *parameter 0-50 LCP Copy* and press [OK].
3. Select 1 of the following:
   - 3a To upload data from the control card to the LCP, select *[1] All to LCP*.
   - 3b To download data from the LCP to the control card, select *[2] All from LCP*.
4. Press [OK]. A progress bar shows the uploading or downloading process.
5. Press [Hand On] or [Auto On].

6.7.2 Restoring Factory Default Settings

NOTICE

LOSS OF DATA

Loss of programming, motor data, localization, and monitoring records occurs when restoring default settings. To create a back-up, upload data to the LCP before initialization. Refer to *chapter 6.7.1 Uploading and Downloading Parameter Settings*.

Restore the default parameter settings by initializing the unit. Initialization is carried out through *parameter 14-22 Operation Mode* or manually.

Parameter 14-22 Operation Mode does not reset settings such as the following:

- Running hours.
- Serial communication options.
- Personal menu settings.
- Fault log, alarm log, and other monitoring functions.

Recommended initialization

1. Press [Main Menu] twice to access parameters.
2. Go to *parameter 14-22 Operation Mode* and press [OK].
3. Scroll to *Initialization* and press [OK].
4. Remove power to the unit and wait for the display to turn off.
5. Apply power to the unit. Default parameter settings are restored during start-up. Start-up takes slightly longer than normal.
6. After *alarm 80, Drive initialized to default value* appears, press [Reset].

Manual initialization

Manual initialization resets all factory settings except for the following:

- *Parameter 15-00 Operating Hours*.
- *Parameter 15-03 Power Up's*.
- *Parameter 15-04 Over Temp's*.
- *Parameter 15-05 Over Volt's*.

To perform manual initialization:

1. Remove power to the unit and wait for the display to turn off.
2. Press and hold [Status], [Main Menu], and [OK] simultaneously while applying power to the unit (approximately 5 s or until an audible click sounds and the fan starts). Start-up takes slightly longer than normal.

7 Wiring Configuration Examples

The examples in this section are intended as a quick reference for common applications.

- Parameter settings are the regional default values unless otherwise indicated (selected in *parameter 0-03 Regional Settings*).
- Parameters associated with the terminals and their settings are shown next to the drawings.
- Required switch settings for analog terminals A53 or A54 are also shown.

NOTICE

When not using the optional STO feature, a jumper wire is required between terminal 12 (or 13) and terminal 37 for the drive to operate with factory default programming values.

7

7.1 Wiring for Open-loop Speed Control

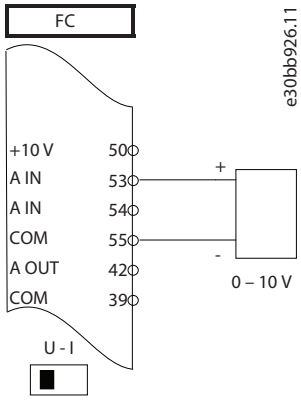

Parameters	
Function	**Setting**
Parameter 6-10 Terminal 53 Low Voltage	0.07 V*
Parameter 6-11 Terminal 53 High Voltage	10 V*
Parameter 6-14 Terminal 53 Low Ref./Feedb. Value	0 Hz
Parameter 6-15 Terminal 53 High Ref./Feedb. Value	50 Hz
* = Default value	
Notes/comments: Assumptions are 0 V DC input = 0 Hz speed and 10 V DC input = 50 Hz speed.	

Table 7.1 Analog Speed Reference (Voltage)

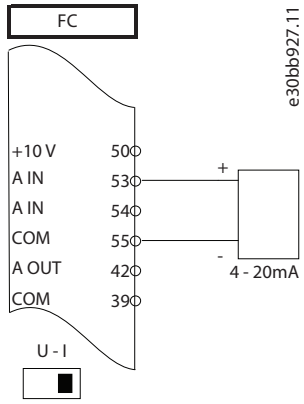

Parameters	
Function	**Setting**
Parameter 6-12 Terminal 53 Low Current	4 mA*
Parameter 6-13 Terminal 53 High Current	20 mA*
Parameter 6-14 Terminal 53 Low Ref./Feedb. Value	0 Hz
Parameter 6-15 Terminal 53 High Ref./Feedb. Value	50 Hz
* = Default value	
Notes/comments: Assumptions are 4 mA input = 0 Hz speed and 20 mA input = 50 Hz speed.	

Table 7.2 Analog Speed Reference (Current)

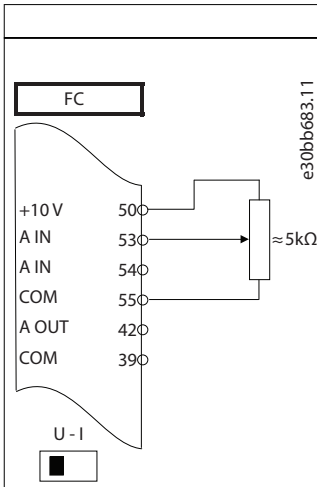

Parameters	
Function	**Setting**
Parameter 6-12 Terminal 53 Low Current	4 mA*
Parameter 6-13 Terminal 53 High Current	20 mA*
Parameter 6-14 Terminal 53 Low Ref./Feedb. Value	0 Hz
Parameter 6-15 Terminal 53 High Ref./Feedb. Value	50 Hz
* = Default value	
Notes/comments: Assumptions are 0 V DC input = 0 RPM speed and 10 V DC input = 1500 RPM speed.	

Table 7.3 Speed Reference (Using a Manual Potentiometer)

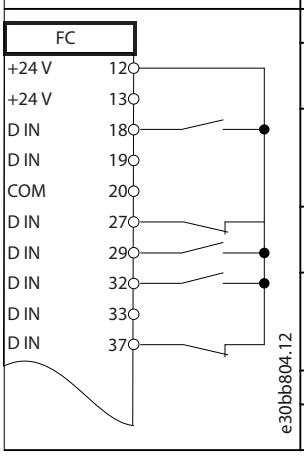

Parameters	
Function	**Setting**
Parameter 5-10 Terminal 18 Digital Input	*[8] Start**
Parameter 5-12 Terminal 27 Digital Input	*[19] Freeze Reference*
Parameter 5-13 Terminal 29 Digital Input	*[21] Speed Up*
Parameter 5-14 Terminal 32 Digital Input	*[22] Speed Down*
* = Default value	
Notes/comments:	

Table 7.4 Speed Up/Speed Down

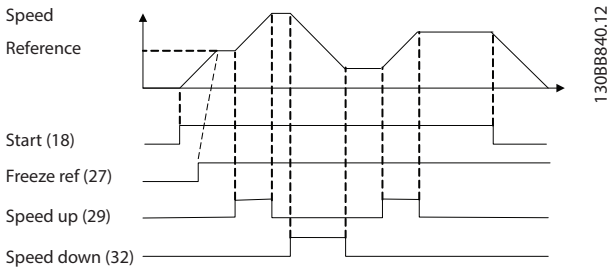

Illustration 7.1 Speed Up/Speed Down

7.2 Wiring for Start/Stop

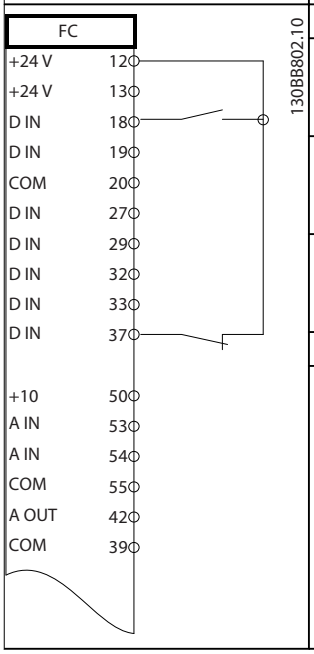

Parameters	
Function	**Setting**
Parameter 5-10 Terminal 18 Digital Input	*[8] Start**
Parameter 5-12 Terminal 27 Digital Input	*[0] No operation*
Parameter 5-19 Terminal 37 Safe Stop	*[1] Safe Stop Alarm*
* = Default value	
Notes/comments: If *parameter 5-12 Terminal 27 Digital Input* is set to *[0] No operation*, a jumper wire to terminal 27 is not needed.	

Table 7.5 Start/Stop Command with Safe Torque Off Option

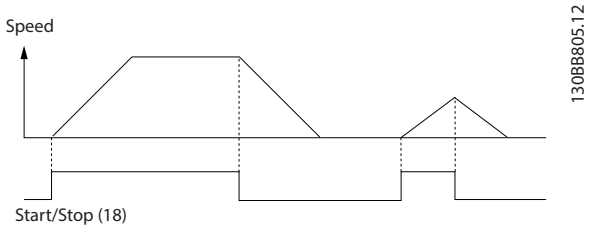

Illustration 7.2 Start/Stop Command with Safe Torque Off

7

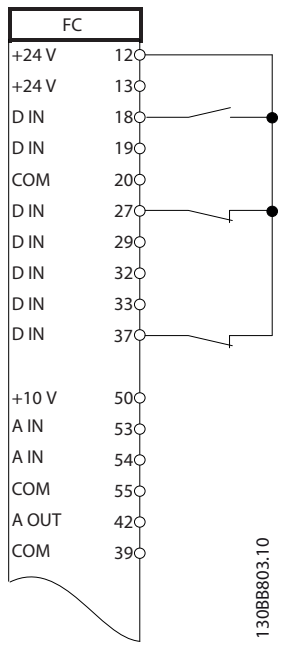

Parameters	
Function	**Setting**
Parameter 5-10 Terminal 18 Digital Input	*[9] Latched Start*
Parameter 5-12 Terminal 27 Digital Input	*[6] Stop Inverse*
* = Default value	
Notes/comments:	

Table 7.6 Pulse Start/Stop

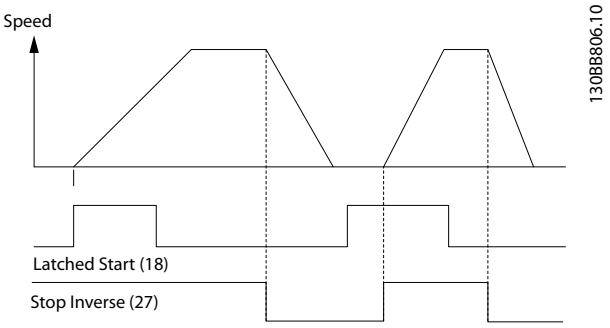

Illustration 7.3 Latched Start/Stop Inverse

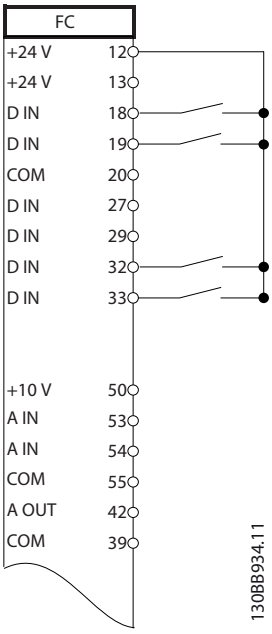

Parameters	
Function	**Setting**
Parameter 5-10 Terminal 18 Digital Input	*[8] Start*
Parameter 5-11 Terminal 19 Digital Input	*[10] Reversing**
Parameter 5-12 Terminal 27 Digital Input	*[0] No operation*
Parameter 5-14 Terminal 32 Digital Input	*[16] Preset ref bit 0*
Parameter 5-15 Terminal 33 Digital Input	*[17] Preset ref bit 1*
Parameter 3-10 Preset Reference	
Preset ref. 0	25%
Preset ref. 1	50%
Preset ref. 2	75%
Preset ref. 3	100%
* = Default value	
Notes/comments:	

Table 7.7 Start/Stop with Reversing and 4 Preset Speeds

7.3 Wiring for External Alarm Reset

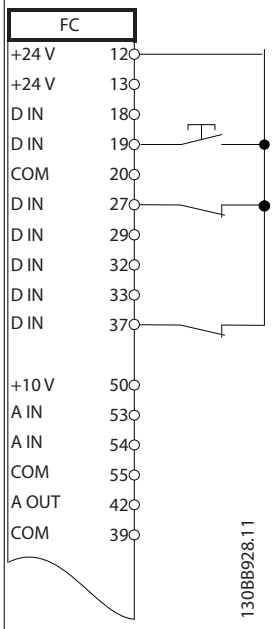

Parameters	
Function	**Setting**
Parameter 5-11 Terminal 19 Digital Input	*[1] Reset*
* = Default value	
Notes/comments:	

Table 7.8 External Alarm Reset

7.4 Wiring for a Motor Thermistor

⚠WARNING

THERMISTOR INSULATION

Risk of personal injury or equipment damage.

- **To meet PELV insulation requirements, use only thermistors with reinforced or double insulation.**

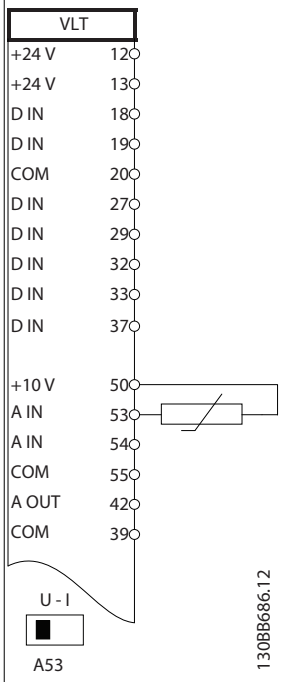

Parameters	
Function	**Setting**
Parameter 1-90 Motor Thermal Protection	*[2] Thermistor trip*
Parameter 1-93 Thermistor Resource	*[1] Analog input 53*
* = Default value	
Notes/comments: If only a warning is desired, set *parameter 1-90 Motor Thermal Protection* to *[1] Thermistor warning*.	

Table 7.9 Motor Thermistor

7.5 Wiring for Regeneration

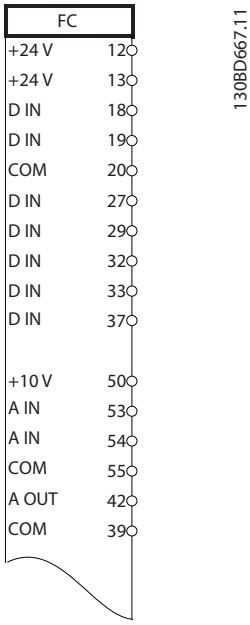

Parameters	
Function	**Setting**
Parameter 1-90 Motor Thermal Protection	100%*
* = Default value	
Notes/comments: To disable regeneration, decrease *parameter 1-90 Motor Thermal Protection* to 0%. If the application uses motor brake power and regeneration is not enabled, the unit trips.	

Table 7.10 Regeneration

7

8 Maintenance, Diagnostics, and Troubleshooting

8.1 Maintenance and Service

This chapter includes:

- Maintenance and service guidelines.
- Status messages.
- Warnings and alarms.
- Basic troubleshooting.

Under normal operating conditions and load profiles, the drive is maintenance-free throughout its designed lifetime. To prevent breakdown, danger, and damage, examine the drive at regular intervals depending on the operating conditions. Replace worn or damaged parts with original spare parts or standard parts. For service and support, refer to *www.danfoss.com/en/service-and-support/*.

8

⚠WARNING

UNINTENDED START

When the drive is connected to AC mains, DC supply, or load sharing, the motor can start at any time. Unintended start during programming, service, or repair work can result in death, serious injury, or property damage. The motor can start with an external switch, a fieldbus command, an input reference signal from the LCP or LOP, via remote operation using MCT 10 Set-up Software, or after a cleared fault condition.

To prevent unintended motor start:

- **Press [Off/Reset] on the LCP before programming parameters.**
- **Disconnect the drive from the mains.**
- **Completely wire and assemble the drive, motor, and any driven equipment before connecting the drive to AC mains, DC supply, or load sharing.**

8.2 Heat Sink Access Panel

The drive can be ordered with an optional access panel in the back of the unit. This access panel provides access to the heat sink and allows the heat sink to be cleaned of any dust buildup.

8.2.1 Removing the Heat Sink Access Panel

NOTICE

DAMAGE TO HEAT SINK

Using fasteners that are longer than those originally supplied with the heat sink panel can damage the heat sink cooling fins.

1. Remove power from the drive and wait 40 minutes for the capacitors to discharge completely. Refer to *chapter 2 Safety*.
2. Position the drive so that the back of the drive is fully accessible.
3. Remove the 8 M5 fasteners securing the access panel to the back of the enclosure using a 3 mm hex bit.
4. Inspect the leading edge of the heat sink for damage or debris.
5. Remove material or debris with a vacuum.
6. Reinstall the panel and secure it to the back of the enclosure with the 8 fasteners. Tighten the fasteners according to *chapter 9.10.1 Fastener Torque Ratings*.

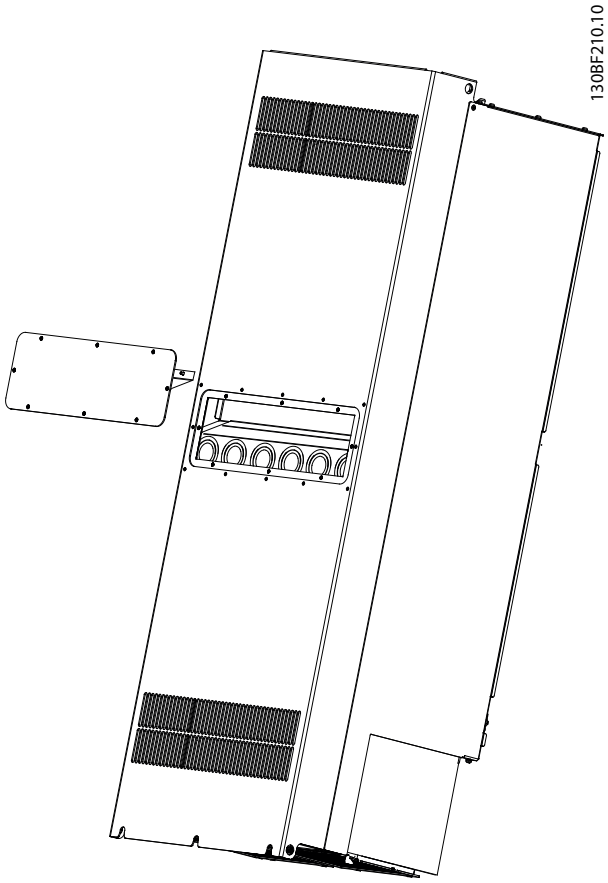

Illustration 8.1 Heat Sink Access Panel Removed from the Rear of the Drive

8.3 Status Messages

When the drive is in status mode, status messages automatically appear in the bottom line of the LCP display. Refer to *Illustration 8.2*. Status messages are defined in *Table 8.1 – Table 8.3*.

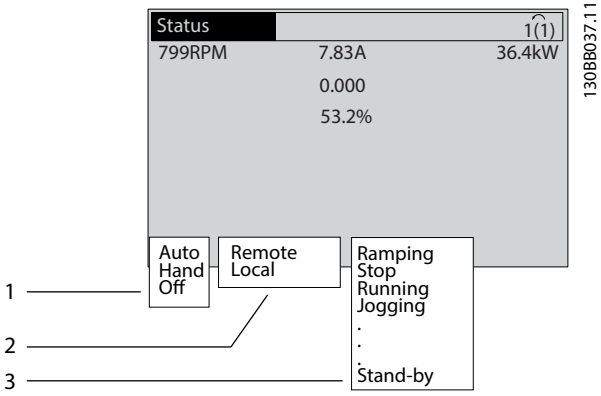

1	Where the stop/start command originates. Refer to *Table 8.1*.
2	Where the speed control originates. Refer to *Table 8.2*.
3	Provides the drive status. Refer to *Table 8.3*.

Illustration 8.2 Status Display

NOTICE

In auto/remote mode, the drive requires external commands to execute functions.

Table 8.1 to *Table 8.3* define the meaning of the shown status messages.

Off	The drive does not react to any control signal until [Auto On] or [Hand On] is pressed.
Auto	The start/stop commands are sent via the control terminals and/or the serial communication.
Hand	The navigation keys on the LCP can be used to control the drive. Stop commands, reset, reversing, DC brake, and other signals applied to the control terminals override local control.

Table 8.1 Operating Mode

Remote	The speed reference is given from • External signals. • Serial communication. • Internal preset references.
Local	The drive uses reference values from the LCP.

Table 8.2 Reference Site

AC brake	AC brake was selected in *parameter 2-10 Brake Function*. The AC brake overmagnetizes the motor to achieve a controlled slowdown.
AMA finish OK	Automatic motor adaptation (AMA) was carried out successfully.
AMA ready	AMA is ready to start. To start, press [Hand On].
AMA running	AMA process is in progress.
Braking	The brake chopper is in operation. The brake resistor absorbs the generative energy.
Braking max.	The brake chopper is in operation. The power limit for the brake resistor defined in *parameter 2-12 Brake Power Limit (kW)* has been reached.
Coast	• *[2] Coast inverse* was selected as a function for a digital input (*parameter group 5-1* Digital Inputs*). The corresponding terminal is not connected. • Coast activated by serial communication.
Ctrl. ramp-down	*[1] Ctrl. ramp-down* was selected in *parameter 14-10 Mains Failure*. • The mains voltage is below the value set in *parameter 14-11 Mains Voltage at Mains Fault* at mains fault. • The drive ramps down the motor using a controlled ramp down.
Current high	The drive output current is above the limit set in *parameter 4-51 Warning Current High*.
Current low	The drive output current is below the limit set in *parameter 4-52 Warning Speed Low*.
DC hold	DC hold is selected in *parameter 1-80 Function at Stop* and a stop command is active. The motor is held by a DC current set in *parameter 2-00 DC Hold Current*.
DC stop	The motor is held with a DC current (*parameter 2-01 DC Brake Current*) for a specified time (*parameter 2-02 DC Braking Time*). • DC brake is activated in *parameter 2-03 DC Brake Cut In Speed [RPM]* and a stop command is active. • DC brake (inverse) is selected as a function for a digital input (*parameter group 5-1* Digital Inputs*). The corresponding terminal is not active. • The DC brake is activated via serial communication.
Feedback high	The sum of all active feedbacks is above the feedback limit set in *parameter 4-57 Warning Feedback High*.
Feedback low	The sum of all active feedbacks is below the feedback limit set in *parameter 4-56 Warning Feedback Low*.

8

Freeze output	The remote reference is active, which holds the present speed. • *[20] Freeze Output* was selected as a function for a digital input (*parameter group 5-1* Digital Inputs*). The corresponding terminal is active. Speed control is only possible via the terminal functions speed up and speed down. • Hold ramp is activated via serial communication.
Freeze output request	A freeze output command has been given, but the motor remains stopped until a run permissive signal is received.
Freeze ref.	*[19] Freeze Reference* was selected as a function for a digital input (*parameter group 5-1* Digital Inputs*). The corresponding terminal is active. The drive saves the actual reference. Changing the reference is now only possible via terminal functions speed up and speed down.
Jog request	A jog command has been given, but the motor is stopped until a run permissive signal is received via a digital input.
Jogging	The motor is running as programmed in *parameter 3-19 Jog Speed [RPM]*. • *[14] Jog* was selected as function for a digital input (*parameter group 5-1* Digital Inputs*). The corresponding terminal (for example, terminal 29) is active. • The jog function is activated via the serial communication. • The jog function was selected as a reaction for a monitoring function (for example, No signal). The monitoring function is active.
Motor check	In *parameter 1-80 Function at Stop*, *[2] Motor Check* was selected. A stop command is active. To ensure that a motor is connected to the drive, a permanent test current is applied to the motor.
OVC control	Overvoltage control was activated in *parameter 2-17 Over-voltage Control*, *[2] Enabled*. The connected motor is supplying the drive with generative energy. The overvoltage control adjusts the V/Hz ratio to run the motor in controlled mode and to prevent the drive from tripping.
Power unit off	(For drives with a 24 V DC external supply installed only.) Mains supply to the drive is removed, but the control card is supplied by the 24 V DC external supply.

Protection md	Protection mode is active. The unit has detected a critical status (an overcurrent or overvoltage). • To avoid tripping, the switching frequency is reduced to 1500 kHz if *parameter 14-55 Output Filter* is set to *[2] Sine-Wave Filter Fixed*. Otherwise, the switching frequency is reduced to 1000 Hz. • If possible, protection mode ends after approximately 10 s. • Protection mode can be restricted in *parameter 14-26 Trip Delay at Inverter Fault*.
QStop	The motor is decelerating using *parameter 3-81 Quick Stop Ramp Time*. • *[4] Quick stop inverse* was selected as a function for a digital input (*parameter group 5-1* Digital Inputs*). The corresponding terminal is not active. • The quick stop function was activated via serial communication.
Ramping	The motor is accelerating/decelerating using the active ramp up/down. The reference, a limit value, or a standstill is not yet reached.
Ref. high	The sum of all active references is above the reference limit set in *parameter 4-55 Warning Reference High*.
Ref. low	The sum of all active references is below the reference limit set in *parameter 4-54 Warning Reference Low*.
Run on ref.	The drive is running in the reference range. The feedback value matches the setpoint value.
Run request	A start command has been given, but the motor is stopped until a run permissive signal is received via digital input.
Running	The drive is driving the motor.
Sleep mode	The energy saving function is enabled. This function being enabled means that now the motor has stopped, but that it restarts automatically when required.
Speed high	The motor speed is above the value set in *parameter 4-53 Warning Speed High*.
Speed low	The motor speed is below the value set in *parameter 4-52 Warning Speed Low*.
Standby	In auto-on mode, the drive starts the motor with a start signal from a digital input or serial communication.
Start delay	In *parameter 1-71 Start Delay*, a delay starting time was set. A start command is activated and the motor starts after the start delay time expires.

Start fwd/rev	*[12] Enable Start Forward* and *[13] Enable Start Reverse* were selected as functions for 2 different digital inputs (*parameter group 5-1* Digital Inputs*). The motor starts in forward or reverse depending on which corresponding terminal is activated.
Stop	The drive has received a stop command from 1 of the following: • LCP. • Digital input. • Serial communication.
Trip	An alarm occurred and the motor is stopped. Once the cause of the alarm is cleared, reset the drive using 1 of the following: • Pressing [Reset]. • Remotely by control terminals. • Via serial communication. Pressing [Reset] or remotely by control terminals or via serial communication.
Trip lock	An alarm occurred and the motor is stopped. Once the cause of the alarm is cleared, cycle power to the drive. Reset the drive manually by 1 of the following: • Pressing [Reset]. • Remotely by control terminals. • Via serial communication.

Table 8.3 Operation Status

8.4 Warning and Alarm Types

The drive software issues warnings and alarms to assist in diagnosing issues. The warning or alarm number appears in the LCP.

Warning
A warning indicates the drive has encountered an abnormal operating condition that leads to an alarm. A warning stops when the abnormal condition is removed or resolved.

Alarm
An alarm indicates a fault that requires immediate attention. The fault always triggers a trip or trip lock. Reset the drive after an alarm.
Reset the drive in any of 4 ways:

- Press [Reset]/[Off/Reset].
- Digital reset input command.
- Serial communication reset input command.
- Auto reset.

Trip
When tripping, the drive suspends operation to prevent damage to the drive and other equipment. When a trip occurs, the motor coasts to a stop. The drive logic continues to operate and monitor the drive status. After the fault condition is remedied, the drive is ready for a reset.

Trip lock
When trip locking, the drive suspends operation to prevent damage to the drive and other equipment. When a trip lock occurs, the motor coasts to a stop. The drive logic continues to operate and monitor the drive status. The drive starts a trip lock only when serious faults occur that can damage the drive or other equipment. After the faults are fixed, cycle the input power before resetting the drive.

Warning and alarm displays

- A warning is shown in the LCP along with the warning number.
- An alarm flashes along with the alarm number.

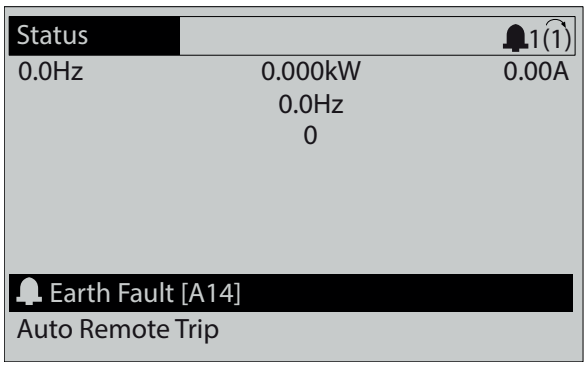

Illustration 8.3 Alarm Example

In addition to the text and alarm code in the LCP, there are 3 status indicator lights.

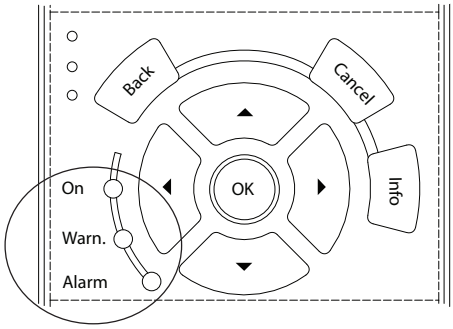

	Warning indicator light	Alarm indicator light
Warning	On	Off
Alarm	Off	On (flashing)
Trip lock	On	On (flashing)

Illustration 8.4 Status Indicator Lights

8.5 List of Warnings and Alarms

The following warning and alarm information defines each warning or alarm condition, provides the probable cause for the condition, and details a remedy or troubleshooting procedure.

WARNING 1, 10 Volts low
The control card voltage is less than 10 V from terminal 50. Remove some of the load from terminal 50, as the 10 V supply is overloaded. Maximum 15 mA or minimum 590 Ω.

A short circuit in a connected potentiometer or incorrect wiring of the potentiometer can cause this condition.

Troubleshooting

- Remove the wiring from terminal 50. If the warning clears, the problem is with the wiring. If the warning does not clear, replace the control card.

WARNING/ALARM 2, Live zero error
This warning or alarm only appears if programmed in *parameter 6-01 Live Zero Timeout Function*. The signal on 1 of the analog inputs is less than 50% of the minimum value programmed for that input. Broken wiring or a faulty device sending the signal can cause this condition.

Troubleshooting

- Check connections on all analog mains terminals.
  - Control card terminals 53 and 54 for signals, terminal 55 common.
  - VLT® General Purpose I/O MCB 101 terminals 11 and 12 for signals, terminal 10 common.
  - VLT® Analog I/O Option MCB 109 terminals 1, 3, and 5 for signals, terminals 2, 4, and 6 common.
- Check that the drive programming and switch settings match the analog signal type.
- Perform an input terminal signal test.

WARNING/ALARM 3, No motor
No motor has been connected to the output of the drive.

WARNING/ALARM 4, Mains phase loss
A phase is missing on the supply side, or the mains voltage imbalance is too high. This message also appears for a fault in the input rectifier. Options are programmed in *parameter 14-12 Function at Mains Imbalance*.

Troubleshooting

- Check the supply voltage and supply currents to the drive.

WARNING 5, DC link voltage high
The DC-link voltage (DC) is higher than the high-voltage warning limit. The limit depends on the drive voltage rating. The unit is still active.

WARNING 6, DC link voltage low
The DC-link voltage (DC) is lower than the low-voltage warning limit. The limit depends on the drive voltage rating. The unit is still active.

WARNING/ALARM 7, DC overvoltage
If the DC-link voltage exceeds the limit, the drive trips after a time.

Troubleshooting

- Extend the ramp time.
- Change the ramp type.
- Increase *parameter 14-26 Trip Delay at Inverter Fault*.
- Check that the supply voltage matches the active front-end drive voltage.
- Perform input voltage test.

WARNING/ALARM 8, DC under voltage
If the DC-link voltage drops below the undervoltage limit, the drive checks for 24 V DC back-up supply. If no 24 V DC back-up supply is connected, the drive trips after a fixed time delay. The time delay varies with unit size.

Troubleshooting

- Check that the supply voltage matches the drive voltage.
- Perform an input voltage test.
- Perform a soft-charge circuit test.

WARNING/ALARM 9, Inverter overload
The drive has run with more than 100% overload for too long and is about to cut out. The counter for electronic thermal inverter protection issues a warning at 98% and trips at 100% with an alarm. The drive cannot be reset until the counter is below 90%.

Troubleshooting

- Compare the output current shown on the LCP with the drive rated current.
- Compare the output current shown on the LCP with the measured motor current.
- Show the thermal drive load on the LCP and monitor the value. When running above the drive continuous current rating, the counter increases. When running below the drive continuous current rating, the counter decreases.

WARNING/ALARM 10, Motor overload temperature
According to the electronic thermal protection (ETR), the motor is too hot.

Select 1 of these options:

- The drive issues a warning or an alarm when the counter is >90% if *parameter 1-90 Motor Thermal Protection* is set to warning options.
- The drive trips when the counter reaches 100% if *parameter 1-90 Motor Thermal Protection* is set to trip options.

The fault occurs when the motor runs with more than 100% overload for too long.

Troubleshooting

- Check for motor overheating.
- Check if the motor is mechanically overloaded.
- Check that the motor current set in *parameter 1-24 Motor Current* is correct.
- Ensure that the motor data in *parameters 1-20 to 1-25* is set correctly.
- If an external fan is in use, check that it is selected in *parameter 1-91 Motor External Fan*.
- Running AMA in *parameter 1-29 Automatic Motor Adaptation (AMA)* tunes the drive to the motor more accurately and reduces thermal loading.

WARNING/ALARM 11, Motor thermistor overtemp

Check whether the thermistor is disconnected. Select whether the drive issues a warning or an alarm in *parameter 1-90 Motor Thermal Protection*.

Troubleshooting

- Check for motor overheating.
- Check if the motor is mechanically overloaded.
- When using terminal 53 or 54, check that the thermistor is connected correctly between either terminal 53 or 54 (analog voltage input) and terminal 50 (+10 V supply). Also check that the terminal switch for 53 or 54 is set for voltage. Check that *parameter 1-93 Thermistor Resource* selects terminal 53 or 54.
- When using terminal 18, 19, 31, 32, or 33 (digital inputs), check that the thermistor is connected correctly between the digital input terminal used (digital input PNP only) and terminal 50. Select the terminal to use in *parameter 1-93 Thermistor Resource*.

WARNING/ALARM 12, Torque limit

The torque has exceeded the value in *parameter 4-16 Torque Limit Motor Mode* or the value in *parameter 4-17 Torque Limit Generator Mode*.
Parameter 14-25 Trip Delay at Torque Limit can change this warning from a warning-only condition to a warning followed by an alarm.

Troubleshooting

- If the motor torque limit is exceeded during ramp-up, extend the ramp-up time.
- If the generator torque limit is exceeded during ramp-down, extend the ramp-down time.
- If torque limit occurs while running, increase the torque limit. Make sure that the system can operate safely at a higher torque.
- Check the application for excessive current draw on the motor.

WARNING/ALARM 13, Over current

The inverter peak current limit (approximately 200% of the rated current) is exceeded. The warning lasts approximately 1.5 s, then the drive trips and issues an alarm. Shock loading or quick acceleration with high-inertia loads can cause this fault. If the acceleration during ramp-up is quick, the fault can also appear after kinetic back-up.
If extended mechanical brake control is selected, a trip can be reset externally.

Troubleshooting

- Remove the power and check if the motor shaft can be turned.
- Check that the motor size matches the drive.
- Check that the motor data is correct in *parameters 1-20* to *1-25*.

ALARM 14, Earth (ground) fault

There is current from the output phase to ground, either in the cable between the drive and the motor, or in the motor itself. The current transducers detect the ground fault by measuring current going out from the drive and current going into the drive from the motor. Ground fault is issued if the deviation of the 2 currents is too large. The current going out of the drive must be the same as the current going into the drive.

Troubleshooting

- Remove power to the drive and repair the ground fault.
- Check for ground faults in the motor by measuring the resistance to ground of the motor cables and the motor with a megohmmeter.
- Reset any potential individual offset in the 3 current transducers in the drive. Perform the manual initialization or perform a complete AMA. This method is most relevant after changing the power card.

ALARM 15, Hardware mismatch

A fitted option is not operational with the present control card hardware or software.

Record the value of the following parameters and contact Danfoss.

- *Parameter 15-40 FC Type*.
- *Parameter 15-41 Power Section*.
- *Parameter 15-42 Voltage*.
- *Parameter 15-43 Software Version*.
- *Parameter 15-45 Actual Typecode String*.
- *Parameter 15-49 SW ID Control Card*.
- *Parameter 15-50 SW ID Power Card*.
- *Parameter 15-60 Option Mounted*.
- *Parameter 15-61 Option SW Version* (for each option slot).

ALARM 16, Short circuit
There is short-circuiting in the motor or motor wiring.

Troubleshooting
- Remove the power to the drive and repair the short circuit.

⚠WARNING

HIGH VOLTAGE
Drives contain high voltage when connected to AC mains input, DC supply, or load sharing. Failure to use qualified personnel to install, start up, and maintain the drive can result in death or serious injury.

- **Disconnect power before proceeding.**

WARNING/ALARM 17, Control word timeout
There is no communication to the drive.
The warning is only active when *parameter 8-04 Control Word Timeout Function* is NOT set to *[0] Off*.
If *parameter 8-04 Control Word Timeout Function* is set to *[5] Stop and trip*, a warning appears, and the drive ramps down to a stop and shows an alarm.

Troubleshooting
- Check the connections on the serial communication cable.
- Increase *parameter 8-03 Control Word Timeout Time*.
- Check the operation of the communication equipment.
- Verify that proper EMC installation was performed.

WARNING/ALARM 20, Temp. input error
The temperature sensor is not connected.

WARNING/ALARM 21, Parameter error
The parameter is out of range. The parameter number is shown in the display.

Troubleshooting
- Set the affected parameter to a valid value.

WARNING 22, Hoist mechanical brake
0 = The torque reference was not reached before timeout.
1 = There was no brake feedback before the timeout.

WARNING 23, Internal fan fault
The fan warning function is a protective function that checks if the fan is running/mounted. The fan warning can be disabled in *parameter 14-53 Fan Monitor* (*[0] Disabled*).

There is a feedback sensor mounted in the fan. If the fan is commanded to run and there is no feedback from the sensor, this alarm appears. This alarm also shows if there is a communication error between the fan power card and the control card.

Check the alarm log (see *chapter 3.6 Local Control Panel (LCP)*) for the report value associated with this warning.

If the report value is 2, there is a hardware problem with 1 of the fans. If the report value is 12, there is a communication problem between the fan power card and the control card.

Fan troubleshooting
- Cycle power to the drive and check that the fan operates briefly at start-up.
- Check for proper fan operation. Use *parameter group 43-** Unit Readouts* to show the speed of each fan.

Fan power card troubleshooting
- Check the wiring between the fan power card and the control card.
- Fan power card may need to be replaced.
- Control card may need to be replaced.

WARNING 24, External fan fault
The fan warning function is a protective function that checks if the fan is running/mounted. The fan warning can be disabled in *parameter 14-53 Fan Monitor* (*[0] Disabled*).

There is a feedback sensor mounted in the fan. If the fan is commanded to run and there is no feedback from the sensor, this alarm appears. This alarm also shows if there is a communication error between the power card and the control card.

Check the alarm log (see *chapter 3.6 Local Control Panel (LCP)*) for the report value associated with this warning.

If the report value is 1, there is a hardware problem with 1 of the fans. If the report value is 11, there is a communication problem between the power card and the control card.

Fan troubleshooting
- Cycle power to the drive and check that the fan operates briefly at start-up.
- Check for proper fan operation. Use *parameter group 43-** Unit Readouts* to show the speed of each fan.

Power card troubleshooting
- Check the wiring between the power card and the control card.
- Power card may need to be replaced.
- Control card may need to be replaced.

WARNING 25, Brake resistor short circuit
The brake resistor is monitored during operation. If a short circuit occurs, the brake function is disabled and the warning appears. The drive is still operational, but without the brake function.

Troubleshooting
- Remove the power to the drive and replace the brake resistor (refer to *parameter 2-15 Brake Check*).

WARNING/ALARM 26, Brake resistor power limit
The power transmitted to the brake resistor is calculated as a mean value over the last 120 s of run-time. The calculation is based on the DC-link voltage and the brake resistor value set in *parameter 2-16 AC brake Max. Current*. The warning is active when the dissipated braking power is higher than 90% of the brake resistor power. If option *[2] Trip* is selected in *parameter 2-13 Brake Power Monitoring*, the drive trips when the dissipated braking power reaches 100%.

WARNING/ALARM 27, Brake chopper fault
The brake transistor is monitored during operation, and if a short circuit occurs, the brake function is disabled, and a warning is issued. The drive is still operational, but since the brake transistor has short-circuited, substantial power is transmitted to the brake resistor, even if it is inactive.

Troubleshooting

- Remove power to the drive and remove the brake resistor.

WARNING/ALARM 28, Brake check failed
The brake resistor is not connected or not working.

Troubleshooting

- Check *parameter 2-15 Brake Check*.

ALARM 29, Heat sink temp
The maximum temperature of the heat sink has been exceeded. This alarm is based on the temperature measured by the heat sink sensor mounted inside the IGBT modules. The temperature fault does not reset until the temperature drops below a defined heat sink temperature. The trip and reset points are different based on the drive power size.

Troubleshooting

- Check for the following conditions:
  - Ambient temperature too high.
  - Motor cable too long.
  - Incorrect airflow clearance above and below the drive.
  - Blocked airflow around the drive.
  - Damaged heat sink fan.
  - Dirty heat sink.
- Check fan resistance.
- Check soft charge fuses.
- Check IGBT thermal.

ALARM 30, Motor phase U missing
Motor phase U between the drive and the motor is missing.

⚠WARNING

HIGH VOLTAGE

Drives contain high voltage when connected to AC mains input, DC supply, or load sharing. Failure to perform installation, start-up, and maintenance by qualified personnel can result in death or serious injury.

- **Only qualified personnel must perform installation, start-up, and maintenance.**
- **Before performing any service or repair work, use an appropriate voltage measuring device to make sure that there is no remaining voltage on the drive.**

Troubleshooting

- Remove the power from the drive and check motor phase U.

ALARM 31, Motor phase V missing
Motor phase V between the drive and the motor is missing.

⚠WARNING

HIGH VOLTAGE

Drives contain high voltage when connected to AC mains input, DC supply, or load sharing. Failure to perform installation, start-up, and maintenance by qualified personnel can result in death or serious injury.

- **Only qualified personnel must perform installation, start-up, and maintenance.**
- **Before performing any service or repair work, use an appropriate voltage measuring device to make sure that there is no remaining voltage on the drive.**

Troubleshooting

- Remove the power from the drive and check motor phase V.

ALARM 32, Motor phase W missing
Motor phase W between the drive and the motor is missing.

⚠WARNING

HIGH VOLTAGE

Drives contain high voltage when connected to AC mains input, DC supply, or load sharing. Failure to perform installation, start-up, and maintenance by qualified personnel can result in death or serious injury.

- **Only qualified personnel must perform installation, start-up, and maintenance.**
- **Before performing any service or repair work, use an appropriate voltage measuring device to make sure that there is no remaining voltage on the drive.**

Troubleshooting

- Remove the power from the drive and check motor phase W.

ALARM 33, Inrush fault

Too many power-ups have occurred within a short time period.

Troubleshooting

- Let the unit cool to operating temperature.
- Check potential DC-link fault to ground.

WARNING/ALARM 34, Fieldbus communication fault

The fieldbus on the communication option card is not working.

WARNING/ALARM 35, Option fault

An option alarm is received. The alarm is option-specific. The most likely cause is a power-up or a communication fault.

WARNING/ALARM 36, Mains failure

This warning/alarm is only active if the supply voltage to the drive system is lost and *parameter 14-10 Mains Failure* is not set to option *[0] No Function*.

- Check the fuses to the drive system and the mains supply to the unit.
- Check that mains voltage conforms to product specifications.
- Check that the following conditions are not present:
  Alarm 307, Excessive THD(V), *alarm 321, Voltage imbalance*, *warning 417, Mains undervoltage*, or *warning 418, Mains overvoltage* is reported if any of the listed conditions are true:
  - The 3-phase voltage magnitude drops below 25% of the nominal mains voltage.
  - Any single-phase voltage exceeds 10% of the nominal mains voltage.
  - Percent of phase or magnitude imbalance exceeds 8%.
  - Voltage THD exceeds 10%.

ALARM 37, Phase imbalance

There is a current imbalance between the power units.

ALARM 38, Internal fault

When an internal fault occurs, a code number defined in *Table 8.4* is shown.

Troubleshooting

- Cycle power.
- Check that the option is properly installed.
- Check for loose or missing wiring.

It may be necessary to contact the Danfoss supplier or service department. Note the code number for further troubleshooting directions.

Number	Text
0	The serial port cannot be initialized. Contact the Danfoss supplier or Danfoss Service Department.
256–259, 266, 268	The power EEPROM data is defective or too old. Replace the power card.
512–519	Internal fault. Contact the Danfoss supplier or Danfoss Service Department.
783	Parameter value outside of minimum/maximum limits.
1024–1284	Internal fault. Contact the Danfoss supplier or Danfoss Service Department.
1299	The option SW in slot A is too old.
1300	The option SW in slot B is too old.
1301	The option SW in slot C0 is too old.
1302	The option SW in slot C1 is too old.
1315	The option SW in slot A is not supported (not allowed).
1316	The option SW in slot B is not supported (not allowed).
1317	The option SW in slot C0 is not supported (not allowed).
1318	The option SW in slot C1 is not supported (not allowed).
1360–2819	Internal fault. Contact the Danfoss supplier or Danfoss Service Department.
2561	Replace control card.
2820	LCP stack overflow.
2821	Serial port overflow.
2822	USB port overflow.
3072–5122	Parameter value is outside its limits.
5123	Option in slot A: Hardware incompatible with control board hardware.
5124	Option in slot B: Hardware incompatible with control board hardware.
5125	Option in slot C0: Hardware incompatible with control board hardware.
5126	Option in slot C1: Hardware incompatible with control board hardware.

Number	Text
5127	Illegal option combination (2 options of the same kind mounted, or encoder in E0 and resolver in E1 or similar).
5168	Safe stop/safe torque off was detected on a control card that does not have safe stop/safe torque off.
5376–65535	Internal fault. Contact the Danfoss supplier or Danfoss Service Department.

Table 8.4 Internal Fault Codes

ALARM 39, Heat sink sensor
No feedback from the heat sink temperature sensor.

The signal from the IGBT thermal sensor is not available on the power card. The problem could be on the power card, on the gatedrive card, or the ribbon cable between the power card and gatedrive card.

WARNING 40, Overload of digital output terminal 27
Check the load connected to terminal 27 or remove the short-circuit connection. Check *parameter 5-00 Digital I/O Mode* and *parameter 5-01 Terminal 27 Mode*.

WARNING 41, Overload of digital output terminal 29
Check the load connected to terminal 29 or remove the short-circuit connection. Also check *parameter 5-00 Digital I/O Mode* and *parameter 5-02 Terminal 29 Mode*.

WARNING 42, Overload of digital output on X30/6 or overload of digital output on X30/7
For terminal X30/6, check the load connected to terminal X30/6 or remove the short-circuit connection. Also check *parameter 5-32 Term X30/6 Digi Out (MCB 101)* (VLT® General Purpose I/O MCB 101).

For terminal X30/7, check the load connected to terminal X30/7 or remove the short-circuit connection. Check *parameter 5-33 Term X30/7 Digi Out (MCB 101)* (VLT® General Purpose I/O MCB 101).

ALARM 43, Ext. supply
VLT® Extended Relay Option MCB 113 is mounted without external 24 V DC. Either connect a 24 V DC external supply or specify that no external supply is used via *parameter 14-80 Option Supplied by External 24VDC, [0] No*. A change in *parameter 14-80 Option Supplied by External 24VDC* requires a power cycle.

ALARM 45, Earth fault 2
Ground fault.

Troubleshooting
- Check for proper grounding and loose connections.
- Check for proper wire size.
- Check the motor cables for short circuits or leakage currents.

ALARM 46, Power card supply
The supply on the power card is out of range. Another reason can be a defective heat sink fan.

There are 3 supplies generated by the switch mode supply (SMPS) on the power card:
- 24 V.
- 5 V.
- ±18 V.

When powered with VLT® 24 V DC Supply MCB 107, only the 24 V and 5 V supplies are monitored. When powered with 3-phase mains voltage, all 3 supplies are monitored.

Troubleshooting
- Check for a defective power card.
- Check for a defective control card.
- Check for a defective option card.
- If a 24 V DC supply is used, verify proper supply power.
- Check for a defective heat sink fan.

WARNING 47, 24 V supply low
The supply on the power card is out of range.

There are 3 supplies generated by the switch mode supply (SMPS) on the power card:
- 24 V.
- 5 V.
- ±18 V.

Troubleshooting
- Check for a defective power card.

WARNING 48, 1.8 V supply low
The 1.8 V DC supply used on the control card is outside of the allowable limits. The supply is measured on the control card.

Troubleshooting
- Check for a defective control card.
- If an option card is present, check for overvoltage.

WARNING 49, Speed limit
The warning is shown when the speed is outside of the specified range in *parameter 4-11 Motor Speed Low Limit [RPM]* and *parameter 4-13 Motor Speed High Limit [RPM]*. When the speed is below the specified limit in *parameter 1-86 Trip Speed Low [RPM]* (except when starting or stopping), the drive trips.

ALARM 50, AMA calibration failed
Contact the Danfoss supplier or Danfoss Service Department.

ALARM 51, AMA check U_{nom} and I_{nom}
The settings for motor voltage, motor current, and motor power are wrong.

Troubleshooting
- Check the settings in *parameters 1-20 to 1-25*.

8

ALARM 52, AMA low I_{nom}
The motor current is too low.

Troubleshooting
- Check the settings in *parameter 1-24 Motor Current*.

ALARM 53, AMA motor too big
The motor is too large for the AMA to operate.

ALARM 54, AMA motor too small
The motor is too small for the AMA to operate.

ALARM 55, AMA parameter out of range
The AMA cannot run because the parameter values of the motor are outside of the acceptable range.

ALARM 56, AMA interrupted by user
The AMA is manually interrupted.

ALARM 57, AMA internal fault
Try to restart the AMA. Repeated restarts can overheat the motor.

ALARM 58, AMA Internal fault
Contact the Danfoss supplier.

8

WARNING 59, Current limit
The current is higher than the value in *parameter 4-18 Current Limit*. Ensure that the motor data in *parameters 1-20 to 1-25* is set correctly. Increase the current limit if necessary. Ensure that the system can operate safely at a higher limit.

WARNING 60, External interlock
A digital input signal indicates a fault condition external to the drive. An external interlock has commanded the drive to trip. Clear the external fault condition. To resume normal operation, apply 24 V DC to the terminal programmed for external interlock, and reset the drive.

WARNING 61, Tracking Error
An error has been detected between the calculated motor speed and the speed measurement from the feedback device. The function for Warning/Alarm/Disable is set in *parameter 4-30 Motor Feedback Loss Function*. Error setting is found in *parameter 4-31 Motor Feedback Speed Error*. Allowed error time is found in *parameter 4-32 Motor Feedback Loss Timeout*. During the commissioning process, this function can be useful.

WARNING 62, Output frequency at maximum limit
If the output frequency reaches the value set in *parameter 4-19 Max Output Frequency*, the drive issues a warning. The warning ceases when the output drops below the maximum limit. If the drive is unable to limit the frequency, it trips and issues an alarm. The latter may happen in the flux mode if the drive loses control of the motor.

Troubleshooting
- Check the application for possible causes.
- Increase the output frequency limit. Ensure that the system can operate safely at a higher output frequency.

ALARM 63, Mechanical brake low
The actual motor current has not exceeded the release brake current within the start delay time window.

WARNING 64, Voltage Limit
The load and speed combination demands a motor voltage higher than the actual DC-link voltage.

WARNING/ALARM 65, Control card over temperature
The cutout temperature of the control card is 85 °C (185 °F).

Troubleshooting
- Check that the ambient operating temperature is within the limits.
- Check for clogged filters.
- Check the fan operation.
- Check the control card.

WARNING 66, Heat sink temperature low
The drive is too cold to operate. This warning is based on the temperature sensor in the IGBT module. Increase the ambient temperature of the unit. Also, a trickle amount of current can be supplied to the drive whenever the motor is stopped by setting *parameter 2-00 DC Hold/Preheat Current* to 5% and *parameter 1-80 Function at Stop*.

ALARM 67, Option module configuration has changed
One or more options have either been added or removed since the last power-down. Check that the configuration change is intentional and reset the unit.

ALARM 68, Safe Stop activated
Safe Torque Off (STO) has been activated. To resume normal operation, apply 24 V DC to terminal 37, then send a reset signal (via bus, digital I/O, or by pressing [Reset]).

ALARM 69, Power card temperature
The temperature sensor on the power card is either too hot or too cold.

Troubleshooting
- Check that the ambient operating temperature is within limits.
- Check for clogged filters.
- Check fan operation.
- Check the power card.

ALARM 70, Illegal FC configuration
The control card and power card are incompatible. To check compatibility, contact the Danfoss supplier with the type code from the unit nameplate and the part numbers of the cards.

WARNING/ALARM 71, PTC 1 Safe Stop
Safe Torque Off (STO) has been activated from the VLT® PTC Thermistor Card MCB 112 because the motor is too warm. Once the motor cools and the digital input from the MCB 112 is deactivated, normal operation can resume when the MCB 112 applies 24 V DC to terminal 37 again. When the motor is ready for normal operation, a reset signal is sent (via serial communication, digital I/O, or by

pressing [Reset] on the LCP). If automatic restart is enabled, the motor can start when the fault is cleared.

ALARM 72, Dangerous failure
Safe Torque Off (STO) with trip lock. Unexpected signal levels on safe torque off and digital input from the VLT® PTC Thermistor Card MCB 112.

WARNING 73, Safe Stop auto restart
Safe Torque Off (STO). With automatic restart enabled, the motor can start when the fault is cleared.

ALARM 74, PTC Thermistor
Alarm related to VLT® PTC Thermistor Card MCB 112. The PTC is not working.

ALARM 75, Illegal profile sel.
Do not write the parameter value while the motor is running. Stop the motor before writing the MCO profile to *parameter 8-10 Control Word Profile*.

WARNING 76, Power unit setup
The required number of power units does not match the detected number of active power units. When replacing an enclosure size F module, this warning occurs if the power-specific data in the module power card does not match the rest of the drive. If the power card connection is lost, the unit also triggers this warning.

Troubleshooting

- Confirm that the spare part and its power card are the correct part number.
- Ensure that the 44-pin cables between the MDCIC and power cards are mounted properly.

WARNING 77, Reduced power mode
This warning indicates that the drive is operating in reduced power mode (that is, less than the allowed number of inverter sections). This warning is generated on power cycle when the drive is set to run with fewer inverters and remains on.

ALARM 78, Tracking error
The difference between setpoint value and actual value exceeds the value in *parameter 4-35 Tracking Error*.

Troubleshooting

- Disable the function or select an alarm/warning in *parameter 4-34 Tracking Error Function*.
- Investigate the mechanics around the load and motor. Check feedback connections from motor encoder to drive.
- Select motor feedback function in *parameter 4-30 Motor Feedback Loss Function*.
- Adjust the tracking error band in *parameter 4-35 Tracking Error* and *parameter 4-37 Tracking Error Ramping*.

ALARM 79, Illegal power section configuration
The scaling card is the incorrect part number or not installed. Also, the MK102 connector on the power card could not be installed.

ALARM 80, Drive initialised to default value
Parameter settings are initialized to default settings after a manual reset. To clear the alarm, reset the unit.

ALARM 81, CSIV corrupt
CSIV file has syntax errors.

ALARM 82, CSIV parameter error
CSIV failed to initialize a parameter.

ALARM 83, Illegal option combination
The mounted options are incompatible.

ALARM 84, No safety option
The safety option was removed without applying a general reset. Reconnect the safety option.

ALARM 85, Dang fail PB
PROFIBUS/PROFIsafe error.

ALARM 88, Option detection
A change in the option layout is detected.
Parameter 14-89 Option Detection is set to *[0] Frozen configuration* and the option layout has been changed.

- To apply the change, enable option layout changes in *parameter 14-89 Option Detection*.
- Alternatively, restore the correct option configuration.

WARNING 89, Mechanical brake sliding
The hoist brake monitor detects a motor speed exceeding 10 RPM.

ALARM 90, Feedback monitor
Check the connection to encoder/resolver option and, if necessary, replace VLT® Encoder Input MCB 102 or VLT® Resolver Input MCB 103.

ALARM 91, Analog input 54 wrong settings
Set switch S202 in position OFF (voltage input) when a KTY sensor is connected to analog input terminal 54.

WARNING 98, Clock fault
Time is not set or the RTC clock has failed.

Troubleshooting

- Reset the clock in *parameter 0-70 Date and Time*.

ALARM 99, Locked rotor
The rotor is blocked.

WARNING/ALARM 104, Mixing fan fault
The fan is not operating. The fan monitor checks that the fan is spinning at power-up or whenever the mixing fan is turned on. The mixing-fan fault can be configured as a warning or an alarm trip in *parameter 14-53 Fan Monitor*.

Troubleshooting

- Cycle power to the drive to determine if the warning/alarm returns.

WARNING/ALARM 122, Mot. rotat. unexp.
The drive performs a function that requires the motor to be at standstill, for example DC hold for PM motors.

WARNING 163, ATEX ETR cur.lim.warning
The drive has run above the characteristic curve for more than 50 s. The warning is activated at 83% and deactivated at 65% of the allowed thermal overload.

ALARM 164, ATEX ETR cur.lim.alarm
Operating above the characteristic curve for more than 60 s within a period of 600 s activates the alarm, and the drive trips.

WARNING 165, ATEX ETR freq.lim.warning
The drive is running for more than 50 s below the allowed minimum frequency (*parameter 1-98 ATEX ETR interpol. points freq.*).

ALARM 166, ATEX ETR freq.lim.alarm
The drive has operated for more than 60 s (in a period of 600 s) below the allowed minimum frequency (*parameter 1-98 ATEX ETR interpol. points freq.*).

ALARM 244, Heat sink temperature
The maximum temperature of the heat sink has been exceeded. The temperature fault cannot reset until the temperature drops below a defined heat sink temperature. The trip and reset points are different based on the power size. This alarm is equivalent to *alarm 29, Heat Sink Temp*.

Troubleshooting
Check for the following conditions:
- Ambient temperature too high.
- Motor cables too long.
- Incorrect airflow clearance above or below the AC drive.
- Blocked airflow around the unit.
- Damaged heat sink fan.
- Dirty heat sink.

WARNING 251, New typecode
The power card or other components are replaced, and the type code has changed.

ALARM 421, Temperature fault
A fault caused by the on-board temperature sensor is detected on the fan power card.

Troubleshooting
- Check wiring.
- Check sensor.
- Replace fan power card.

ALARM 423, FPC updating
The alarm is generated when the fan power card reports it has an invalid PUD. The control card attempts to update the PUD. A subsequent alarm can result depending on the update. See A424 and A425.

ALARM 424, FPC update successful
This alarm is generated when the control card has successfully updated the fan power card PUD. The drive must be reset to stop the alarm.

ALARM 425, FPC update failure
This alarm is generated after the control card failed to update the fan power card PUD.

Troubleshooting
- Check the fan power card wiring.
- Replace fan power card.
- Contact supplier.

ALARM 426, FPC config
The number of found fan power cards does not match the number of configured fan power cards. See *parameter group 15-6* Option Ident* for the number of configured fan power cards.

Troubleshooting
- Check fan power card wiring.
- Replace fan power card.

ALARM 427, FPC supply
Supply voltage fault (5 V, 24 V, or 48 V) on fan power card is detected.

Troubleshooting
- Check fan power card wiring.
- Replace fan power card.

8.6 Troubleshooting

Symptom	Possible cause	Test	Solution
Display dark/No function	Missing input power.	See *Table 5.5*.	Check the input power source.
	Missing or open fuses.	See *Open power fuses* in this table for possible causes.	Follow the recommendations provided.
	No power to the LCP.	Check the LCP cable for proper connection or damage.	Replace the faulty LCP or connection cable.
	Shortcut on control voltage (terminal 12 or 50) or at control terminals.	Check the 24 V control voltage supply for terminal 12/13 to 20–39, or 10 V supply for terminals 50–55.	Wire the terminals properly.
	Incompatible LCP (LCP from VLT® 2800 or 5000/6000/8000/ FCD or FCM).	–	Use only LCP 101 (P/N 130B1124) or LCP 102 (P/N 130B1107).
	Wrong contrast setting.	–	Press [Status] + [▲]/[▼] to adjust the contrast.
	Display (LCP) is defective.	Test using a different LCP.	Replace the faulty LCP or connection cable.
	Internal voltage supply fault or SMPS is defective.	–	Contact supplier.
Intermittent display	Overloaded supply (SMPS) due to improper control wiring or a fault within the AC drive.	To rule out a problem in the control wiring, disconnect all control wiring by removing the terminal blocks.	If the display stays lit, the problem is in the control wiring. Check the wiring for shorts or incorrect connections. If the display continues to cut out, follow the procedure for *Display dark/No function*.
Motor not running	Service switch open or missing motor connection.	Check if the motor is connected and the connection is not interrupted by a service switch or other device.	Connect the motor and check the service switch.
	No mains power with 24 V DC option card.	If the display is functioning, but there is no output, check that mains power is applied to the AC drive.	Apply mains power.
	LCP Stop.	Check if [Off] has been pressed.	Press [Auto On] or [Hand On] (depending on operating mode).
	Missing start signal (Standby).	Check *parameter 5-10 Terminal 18 Digital Input* for correct setting for terminal 18. Use default setting.	Apply a valid start signal.
	Motor coast signal active (Coasting).	Check *parameter 5-12 Terminal 27 Digital Input* for correct setting for terminal 27 (use default setting).	Apply 24 V on terminal 27 or program this terminal to *[0] No operation*.
	Wrong reference signal source.	Check reference signal: • Local. • Remote or bus reference? • Preset reference active? • Terminal connection correct? • Scaling of terminals correct? • Reference signal available?	Program correct settings. Check *parameter 3-13 Reference Site*. Set preset reference active in *parameter group 3-1* References*. Check for correct wiring. Check scaling of terminals. Check reference signal.
Motor running in wrong direction	Motor rotation limit.	Check that *parameter 4-10 Motor Speed Direction* is programmed correctly.	Program correct settings.
	Active reversing signal.	Check if a reversing command is programmed for the terminal in *parameter group 5-1* Digital inputs*.	Deactivate reversing signal.
	Wrong motor phase connection.	–	See *chapter 6.5.1 Warning - Motor Start*.

8

Symptom	Possible cause	Test	Solution
Motor is not reaching maximum speed	Frequency limits set wrong.	Check output limits in *parameter 4-13 Motor Speed High Limit [RPM]*, *parameter 4-14 Motor Speed High Limit [Hz]*, and *parameter 4-19 Max Output Frequency*	Program correct limits.
	Reference input signal not scaled correctly.	Check reference input signal scaling in *parameter group 6-0* Analog I/O mode* and *parameter group 3-1* References.*	Program correct settings.
Motor speed unstable	Possible incorrect parameter settings.	Check the settings of all motor parameters, including all motor compensation settings. For closed-loop operation, check PID settings.	Check settings in *parameter group 1-6* Load Depen. Setting*. For closed-loop operation, check settings in *parameter group 20-0* Feedback*.
Motor runs rough	Possible overmagnetization.	Check for incorrect motor settings in all motor parameters.	Check motor settings in *parameter groups 1-2* Motor data, 1-3* Adv Motor Data*, and *1-5* Load Indep. Setting.*
Motor does not brake	Possible incorrect settings in the brake parameters. Ramp-down times may be too short.	Check brake parameters. Check ramp time settings.	Check *parameter groups 2-0* DC Brake* and *3-0* Reference Limits*.
Open power fuses	Phase-to-phase short.	Motor or panel has a short phase-to-phase. Check motor and panel phases for shorts.	Eliminate any shorts detected.
	Motor overload.	Motor is overloaded for the application.	Perform start-up test and verify that motor current is within specifications. If motor current is exceeding the nameplate full load current, the motor can run only with reduced load. Review the specifications for the application.
	Loose connections.	Perform pre-start-up check for loose connections.	Tighten loose connections.
Mains current imbalance greater than 3%	Problem with mains power (see *alarm 4, Mains phase loss* description).	Rotate input power leads into the 1 position: A to B, B to C, C to A.	If imbalanced leg follows the wire, it is a power problem. Check the mains supply.
	Problem with the AC drive.	Rotate input power leads into the AC drive 1 position: A to B, B to C, C to A.	If the imbalanced leg stays on same input terminal, it is a problem with the AC drive. Contact supplier.
Motor current imbalance greater than 3%	Problem with motor or motor wiring.	Rotate output motor cables 1 position: U to V, V to W, W to U.	If the imbalanced leg follows the wire, the problem is in the motor or motor wiring. Check motor and motor wiring.
	Problem with AC drive.	Rotate output motor cables 1 position: U to V, V to W, W to U.	If the imbalanced leg stays on same output terminal, it is a problem with the unit. Contact supplier.
AC drive acceleration problems	Motor data are entered incorrectly.	If warnings or alarms occur, see *chapter 8.5 List of Warnings and Alarms*. Check that motor data are entered correctly.	Increase the ramp-up time in *parameter 3-41 Ramp 1 Ramp Up Time*. Increase current limit in *parameter 4-18 Current Limit*. Increase torque limit in *parameter 4-16 Torque Limit Motor Mode*.
AC drive deceleration problems	Motor data are entered incorrectly.	If warnings or alarms occur, see *chapter 8.5 List of Warnings and Alarms*. Check that motor data are entered correctly.	Increase the ramp-down time in *parameter 3-42 Ramp 1 Ramp Down Time*. Enable overvoltage control in *parameter 2-17 Over-voltage Control*.

Table 8.5 Troubleshooting

9 Specifications

9.1 Electrical Data

9.1.1 Mains Supply 3x380–480 V AC

FC 202	N355		N400		N450	
High/normal load (High overload=150% current during 60 s, normal overload=110% current during 60 s)	**HO**	**NO**	**HO**	**NO**	**HO**	**NO**
Typical shaft output at 400 V [kW]	315	355	355	400	400	450
Typical shaft output at 460 V [hp]	450	500	500	600	550	600
Typical shaft output at 480 V [kW]	355	400	400	500	500	530
Enclosure size	E1h/E3h		E1h/E3h		E1h/E3h	
Output current (3-phase)						
Continuous (at 400 V) [A]	600	658	658	745	695	800
Intermittent (60 s overload) (at 400 V) [A]	900	724	987	820	1043	880
Continuous (at 460/480 V) [A]	540	590	590	678	678	730
Intermittent (60 s overload) (at 460/480 V) [A]	810	649	885	746	1017	803
Continuous kVA (at 400 V) [kVA]	416	456	456	516	482	554
Continuous kVA (at 460 V) [kVA]	430	470	470	540	540	582
Maximum input current						
Continuous (at 400 V) [A]	578	634	634	718	670	771
Continuous (at 460/480 V) [A]	520	569	569	653	653	704
Maximum number and size of cables per phase (E1h)						
- Mains and motor without brake [mm^2 (AWG)][1)]	5x240 (5x500 mcm)		5x240 (5x500 mcm)		5x240 (5x500 mcm)	
- Mains and motor with brake [mm^2 (AWG)[1)]	4x240 (4x500 mcm)		4x240 (4x500 mcm)		4x240 (4x500 mcm)	
- Brake or regeneration [mm^2 (AWG)[1)]	2x185 (2x350 mcm)		2x185 (2x350 mcm)		2x185 (2x350 mcm)	
Maximum number and size of cables per phase (E3h)						
- Mains and motor without brake [mm^2 (AWG)][1)]	6x240 (6x500 mcm)		6x240 (6x500 mcm)		6x240 (6x500 mcm)	
- Mains and motor with brake [mm^2 (AWG)[1)]	2x185 (2x350 mcm)		2x185 (2x350 mcm)		2x185 (2x350 mcm)	
- Load share or regeneration [mm^2 (AWG)[1)]	4x185 (4x350 mcm)		4x185 (4x350 mcm)		4x185 (4x350 mcm)	
Maximum external mains fuses [A][2)]	800		800		800	
Estimated power loss at 400 V [W][3), 4)]	6178	6928	6851	8036	7297	8783
Estimated power loss at 460 V [W] [3), 4)]	5322	5910	5846	6933	7240	7969
Efficiency[4)]	0.98		0.98		0.98	
Output frequency	0–590 Hz		0–590 Hz		0–590 Hz	
Heat sink overtemperature trip [°C (°F)]	110 (230)		110 (230)		110 (230)	
Control card overtemperature trip [°C (°F)]	80 (176)		80 (176)		80 (176)	
Power card overtemperature trip [°C (°F)]	85 (185)		85 (185)		85 (185)	
Fan power card overtemperature trip [°C (°F)]	85 (185)		85 (185)		85 (185)	
Active in-rush card overtemperature trip [°C (°F)]	85 (185)		85 (185)		85 (185)	

Table 9.1 Technical Specifications, Mains Supply 3x380–480 V AC

9

FC 202	N500		N560	
High/normal load (High overload=150% current during 60 s, normal overload=110% current during 60 s)	**HO**	**NO**	**HO**	**NO**
Typical shaft output at 400 V [kW]	450	500	500	560
Typical shaft output at 460 V [hp]	600	650	650	750
Typical shaft output at 480 V [kW]	530	560	560	630
Enclosure size	E2h/E4h		E2h/E4h	
Output current (3-phase)				
Continuous (at 400 V) [A]	800	880	880	990
Intermittent (60 s overload) (at 400 V) [A]	1200	968	1320	1089
Continuous (at 460/480 V) [A]	730	780	780	890
Intermittent (60 s overload) (at 460/480 V) [A]	1095	858	1170	979
Continuous kVA (at 400 V) [kVA]	554	610	610	686
Continuous kVA (at 460 V) [kVA]	582	621	621	709
Maximum input current				
Continuous (at 400 V) [A]	771	848	848	954
Continuous (at 460/480 V) [A]	704	752	752	858
Maximum number and size of cables per phase (E2h)				
- Mains and motor without brake [mm^2 (AWG)][1)]	6x240 (6x500 mcm)		6x240 (6x500 mcm)	
- Mains and motor with brake [mm^2 (AWG)[1)]	5x240 (5x500 mcm)		5x240 (5x500 mcm)	
- Brake or regeneration [mm^2 (AWG)[1)]	2x185 (2x350 mcm)		2x185 (2x350 mcm)	
Maximum number and size of cables per phase (E4h)				
- Mains and motor without brake [mm^2 (AWG)][1)]	6x240 (6x500 mcm)		6x240 (6x500 mcm)	
- Mains and motor with brake [mm^2 (AWG)[1)]	2x185 (2x350 mcm)		2x185 (2x350 mcm)	
- Load share or regeneration [mm^2 (AWG)[1)]	4x185 (4x350 mcm)		4x185 (4x350 mcm)	
Maximum external mains fuses [A][2)]	1200		1200	
Estimated power loss at 400 V [W][3), 4)]	8352	9473	9449	11102
Estimated power loss at 460 V [W] [3), 4)]	7182	7809	7771	9236
Efficiency[4)]	0.98		0.98	
Output frequency [Hz]	0–590		0–590	
Heat sink overtemperature trip [°C (°F)]	110 (230)		100 (212)	
Control card overtemperature trip [°C (°F)]	80 (176)		80 (176)	
Power card overtemperature trip [°C (°F)]	85 (185)		85 (185)	
Fan power card overtemperature trip [°C (°F)]	85 (185)		85 (185)	
Active in-rush card overtemperature trip [°C (°F)]	85 (185)		85 (185)	

Table 9.2 Technical Specifications, Mains Supply 3x380–480 V AC

1) American Wire Gauge.

2) For fuse ratings, see chapter 9.7 Fuses.

3) Typical power loss is at normal conditions and expected to be within ±15% (tolerance relates to variety in voltage and cable conditions.) These values are based on a typical motor efficiency (IE/IE3 border line). Lower efficiency motors add to the power loss in the drive. Applies for dimensioning of drive cooling. If the switching frequency is higher than the default setting, the power losses can increase. LCP and typical control card power consumptions are included. For power loss data according to EN 50598-2, refer to drives.danfoss.com/knowledge-center/energy-efficiency-directive/#/. Options and customer load can add up to 30 W to the losses, though usually a fully loaded control card and options for slots A and B each add only 4 W.

4) Measured using 5 m (16.4 ft) shielded motor cables at rated load and rated frequency. Efficiency measured at nominal current. For energy efficiency class, see chapter 9.4 Ambient Conditions. For part load losses, see drives.danfoss.com/knowledge-center/energy-efficiency-directive/#/.

9.1.2 Mains Supply 3x525–690 V AC

FC 202	N450		N500	
High/normal load (High overload=150% current during 60 s, normal overload=110% current during 60 s)	**HO**	**NO**	**HO**	**NO**
Typical shaft output at 550 V [kW]	315	355	315	400
Typical shaft output at 575 V [hp]	400	450	400	500
Typical shaft output at 690 V [kW]	355	450	400	500
Enclosure size	E1h/E3h		E1h/E3h	
Output current (3-phase)				
Continuous (at 550 V) [A]	395	470	429	523
Intermittent (60 s overload) (at 550 V) [A]	593	517	644	575
Continuous (at 575/690 V) [A]	380	450	410	500
Intermittent (60 s overload) (at 575/690 V) [A]	570	495	615	550
Continuous kVA (at 550 V) [kVA]	376	448	409	498
Continuous kVA (at 575 V) [kVA]	378	448	408	498
Continuous kVA (at 690 V) [kVA]	454	538	490	598
Maximum input current				
Continuous (at 550 V) [A]	381	453	413	504
Continuous (at 575/690 V) [A]	366	434	395	482
Maximum number and size of cables per phase (E1h)				
- Mains and motor without brake [mm^2 (AWG)][1)]	5x240 (5x500 mcm)		5x240 (5x500 mcm)	
- Mains and motor with brake [mm^2 (AWG)[1)]	4x240 (4x500 mcm)		4x240 (4x500 mcm)	
- Brake or regeneration [mm^2 (AWG)[1)]	2x185 (2x350 mcm)		2x185 (2x350 mcm)	
Maximum number and size of cables per phase (E3h)				
- Mains and motor without brake [mm^2 (AWG)][1)]	6x240 (6x500 mcm)		6x240 (6x500 mcm)	
- Mains and motor with brake [mm^2 (AWG)[1)]	2x185 (2x350 mcm)		2x185 (2x350 mcm)	
- Load share or regeneration [mm^2 (AWG)[1)]	4x185 (4x350 mcm)		4x185 (4x350 mcm)	
Maximum external mains fuses [A][2)]	800		800	
Estimated power loss at 600 V [W][3), 4)]	4989	6062	5419	6879
Estimated power loss at 690 V [W][3), 4)]	4920	5939	5332	6715
Efficiency[4)]	0.98		0.98	
Output frequency [Hz]	0–500		0–500	
Heat sink overtemperature trip [°C (°F)]	110 (230)		110 (230)	
Control card overtemperature trip [°C (°F)]	80 (176)		80 (176)	
Power card overtemperature trip [°C (°F)]	85 (185)		85 (185)	
Fan power card overtemperature trip [°C (°F)]	85 (185)		85 (185)	
Active in-rush card overtemperature trip [°C (°F)]	85 (185)		85 (185)	

Table 9.3 Technical Specifications, Mains Supply 3x525–690 V AC

9

FC 202	N560		N630	
High/normal load (High overload=150% current during 60 s, normal overload=110% current during 60 s)	**HO**	**NO**	**HO**	**NO**
Typical shaft output at 550 V [kW]	400	450	450	500
Typical shaft output at 575 V [hp]	500	600	600	650
Typical shaft output at 690 V [kW]	500	560	560	630
Enclosure size	E1h/E3h		E1h/E3h	
Output current (3-phase)				
Continuous (at 550 V) [A]	523	596	596	630
Intermittent (60 s overload) (at 550 V) [A]	785	656	894	693
Continuous (at 575/690 V) [A]	500	570	570	630
Intermittent (60 s overload) (at 575/690 V) [A]	750	627	855	693
Continuous kVA (at 550 V) [kVA]	498	568	568	600
Continuous kVA (at 575 V) [kVA]	498	568	568	627
Continuous kVA (at 690 V) [kVA]	598	681	681	753
Maximum input current				
Continuous (at 550 V) [A]	504	574	574	607
Continuous (at 575/690 V) [A]	482	549	549	607
Maximum number and size of cables per phase (E1h)				
- Mains and motor without brake [mm^2 (AWG)][1)]	5x240 (5x500 mcm)		5x240 (5x500 mcm)	
- Mains and motor with brake [mm^2 (AWG)[1)]	4x240 (4x500 mcm)		4x240 (4x500 mcm)	
- Brake or regeneration [mm^2 (AWG)[1)]	2x185 (2x350 mcm)		2x185 (2x350 mcm)	
Maximum number and size of cables per phase (E3h)				
- Mains and motor without brake [mm^2 (AWG)][1)]	6x240 (6x500 mcm)		6x240 (6x500 mcm)	
- Mains and motor with brake [mm^2 (AWG)[1)]	2x185 (2x350 mcm)		2x185 (2x350 mcm)	
- Load share or regeneration [mm^2 (AWG)[1)]	4x185 (4x350 mcm)		4x185 (4x350 mcm)	
Maximum external mains fuses [A][2)]	800		800	
Estimated power loss at 600 V [W][3), 4)]	6833	8076	8069	9208
Estimated power loss at 690 V [W][3), 4)]	6678	7852	7848	8921
Efficiency[4)]	0.98		0.98	
Output frequency [Hz]	0–500		0–500	
Heat sink overtemperature trip [°C (°F)]	110 (230)		110 (230)	
Control card overtemperature trip [°C (°F)]	80 (176)		80 (176)	
Power card overtemperature trip [°C (°F)]	85 (185)		85 (185)	
Fan power card overtemperature trip [°C (°F)]	85 (185)		85 (185)	
Active in-rush card overtemperature trip [°C (°F)]	85 (185)		85 (185)	

Table 9.4 Technical Specifications, Mains Supply 3x525–690 V AC

FC 202	N710		N800	
High/normal load (High overload=150% current during 60 s, normal overload=110% current during 60 s)	**HO**	**NO**	**HO**	**NO**
Typical shaft output at 550 V [kW]	500	560	560	670
Typical shaft output at 575 V [hp]	650	750	750	950
Typical shaft output at 690 V [kW]	630	710	710	800
Enclosure size	E2h/E4h		E2h/E4h	
Output current (3-phase)				
Continuous (at 550 V) [A]	659	763	763	889
Intermittent (60 s overload) (at 550 V) [A]	989	839	1145	978
Continuous (at 575/690 V) [A]	630	730	730	850
Intermittent (60 s overload) (at 575/690 V) [A]	945	803	1095	935
Continuous kVA (at 550 V) [kVA]	628	727	727	847
Continuous kVA (at 575 V) [kVA]	627	727	727	847
Continuous kVA (at 690 V) [kVA]	753	872	872	1016
Maximum input current				
Continuous (at 550 V) [A]	635	735	735	857
Continuous (at 575/690 V) [A]	607	704	704	819
Maximum number and size of cables per phase (E2h)				
- Mains and motor without brake [mm^2 (AWG)][1)]	6x240 (6x500 mcm)		6x240 (6x500 mcm)	
- Mains and motor with brake [mm^2 (AWG)[1)]	5x240 (5x500 mcm)		5x240 (5x500 mcm)	
- Brake or regeneration [mm^2 (AWG)[1)]	2x185 (2x350 mcm)		2x185 (2x350 mcm)	
Maximum number and size of cables per phase (E4h)				
- Mains and motor without brake [mm^2 (AWG)][1)]	6x240 (6x500 mcm)		6x240 (6x500 mcm)	
- Mains and motor with brake [mm^2 (AWG)[1)]	2x185 (2x350 mcm)		2x185 (2x350 mcm)	
- Load share or regeneration [mm^2 (AWG)[1)]	4x185 (4x350 mcm)		4x185 (4x350 mcm)	
Maximum external mains fuses [A][2)]	1200		1200	
Estimated power loss at 600 V [W][3), 4)]	8543	10346	10319	12723
Estimated power loss at 690 V [W][3), 4)]	8363	10066	10060	12321
Efficiency[4)]	0.98		0.98	
Output frequency [Hz]	0–500		0–500	
Heat sink overtemperature trip [°C (°F)]	110 (230)		110 (230)	
Control card overtemperature trip [°C (°F)]	80 (176)		80 (176)	
Power card overtemperature trip [°C (°F)]	85 (185)		85 (185)	
Fan power card overtemperature trip [°C (°F)]	85 (185)		85 (185)	
Active in-rush card overtemperature trip [°C (°F)]	85 (185)		85 (185)	

Table 9.5 Technical Specifications, Mains Supply 3x525–690 V AC

1) American Wire Gauge.

2) For fuse ratings, see chapter 9.7 Fuses.

3) Typical power loss is at normal conditions and expected to be within ±15% (tolerance relates to variety in voltage and cable conditions.) These values are based on a typical motor efficiency (IE/IE3 border line). Lower efficiency motors add to the power loss in the drive. Applies for dimensioning of drive cooling. If the switching frequency is higher than the default setting, the power losses can increase. LCP and typical control card power consumptions are included. For power loss data according to EN 50598-2, refer to drives.danfoss.com/knowledge-center/energy-efficiency-directive/#/. Options and customer load can add up to 30 W to the losses, though usually a fully loaded control card and options for slots A and B each add only 4 W.

4) Measured using 5 m shielded motor cables at rated load and rated frequency. Efficiency measured at nominal current. For energy efficiency class, see chapter 9.4 Ambient Conditions. For part load losses, see drives.danfoss.com/knowledge-center/energy-efficiency-directive/#/.

9.2 Mains Supply

Mains supply (L1, L2, L3)	
Supply voltage	380–500 V ±10%, 525–690 V ±10%

Mains voltage low/mains voltage drop-out:
During low mains voltage or a mains drop-out, the drive continues until the DC-link voltage drops below the minimum stop level, which corresponds typically to 15% below the lowest rated supply voltage of the drive. Power-up and full torque cannot be expected at mains voltage lower than 10% below the lowest rated supply voltage of the drive.

Supply frequency	50/60 Hz ±5%
Maximum imbalance temporary between mains phases	3.0% of rated supply voltage[1)]
True power factor (λ)	≥0.9 nominal at rated load
Displacement power factor (cos Φ) near unity	(>0.98)
Switching on input supply L1, L2, L3 (power-ups)	Maximum 1 time/2 minute
Environment according to EN60664-1	Overvoltage category III/pollution degree 2

The drive is suitable for use on a circuit capable of delivering up to 100 kA short circuit current rating (SCCR) at 480/600 V.
1) Calculations based on UL/IEC61800-3.

9.3 Motor Output and Motor Data

Motor output (U, V, W)	
Output voltage	0–100% of supply voltage
Output frequency	0–590 Hz[1)]
Output frequency in flux mode	0–300 Hz
Switching on output	Unlimited
Ramp times	0.01–3600 s

1) Dependent on voltage and power.

Torque characteristics	
Starting torque (constant torque)	Maximum 150% for 60 s[1), 2)]
Overload torque (constant torque)	Maximum 150% for 60 s[1), 2)]

1) Percentage relates to the nominal current of the drive.
2) Once every 10 minutes.

9.4 Ambient Conditions

Environment	
E1h/E2h enclosure	IP21/Type 1, IP54/Type 12
E3h/E4h enclosure	IP20/Chassis
Vibration test (standard/ruggedized)	0.7 g/1.0 g
Relative humidity	5%-95% (IEC 721-3-3; Class 3K3 (non-condensing) during operation)
Aggressive environment (IEC 60068-2-43) H_2S test	Class Kd
Aggressive gases (IEC 60721-3-3)	Class 3C3
Test method according to IEC 60068-2-43	H2S (10 days)
Ambient temperature (at SFAVM switching mode)	
- with derating	Maximum 55 °C (maximum 131 °F)[1)]
- with full output power of typical EFF2 motors (up to 90% output current)	Maximum 50 °C (maximum 122 °F)[1)]
- at full continuous FC output current	Maximum 45 °C (maximum 113 °F)[1)]
Minimum ambient temperature during full-scale operation	0 °C (32 °F)
Minimum ambient temperature at reduced performance	-10 °C (14 °F)
Temperature during storage/transport	-25 to +65/70 °C (13 to 149/158 °F)
Maximum altitude above sea level without derating	1000 m (3281 ft)
Maximum altitude above sea level with derating	3000 m (9842 ft)

1) For more information on derating, refer to the product-specific design guide.

EMC standards, Emission	EN 61800-3
EMC standards, Immunity	EN 61800-3
Energy efficiency class[2)]	IE2

2) Determined according to EN 50598-2 at:

- *Rated load.*
- *90% rated frequency.*
- *Switching frequency factory setting.*
- *Switching pattern factory setting.*

9.5 Cable Specifications

Cable lengths and cross-sections for control cables[1)]	
Maximum motor cable length, shielded/armored	150 m (492 ft)
Maximum motor cable length, unshielded/unarmored	300 m (984 ft)
Maximum cross-section to motor, mains, load sharing, and brake	See *chapter 9.1 Electrical Data*
Maximum cross-section to control terminals, rigid wire	1.5 mm^2/16 AWG (2x0.75 mm^2)
Maximum cross-section to control terminals, flexible cable	1 mm^2/18 AWG
Maximum cross-section to control terminals, cable with enclosed core	0.5 mm^2/20 AWG
Minimum cross-section to control terminals.	0.25 mm^2/23 AWG

1) For power cables, see electrical tables in chapter 9.1 Electrical Data.

9.6 Control Input/Output and Control Data

Digital inputs	
Programmable digital inputs	4 (6)
Terminal number	18, 19, 27[1)], 29[1)], 32, 33
Logic	PNP or NPN
Voltage level	0–24 V DC
Voltage level, logic 0 PNP	<5 V DC
Voltage level, logic 1 PNP	>10 V DC
Voltage level, logic 0 NPN	>19 V DC
Voltage level, logic 1 NPN	<14 V DC
Maximum voltage on input	28 V DC
Input resistance, R_i	Approximately 4 kΩ

All digital inputs are galvanically isolated from the supply voltage (PELV) and other high-voltage terminals.
1) Terminals 27 and 29 can also be programmed as outputs.

Analog inputs	
Number of analog inputs	2
Terminal number	53, 54
Modes	Voltage or current
Mode select	Switches A53 and A54
Voltage mode	Switch A53/A54=(U)
Voltage level	-10 V to +10 V (scaleable)
Input resistance, R_i	Approximately 10 kΩ
Maximum voltage	±20 V
Current mode	Switch A53/A54=(I)
Current level	0/4 to 20 mA (scaleable)
Input resistance, R_i	Approximately 200 Ω
Maximum current	30 mA
Resolution for analog inputs	10 bit (+ sign)
Accuracy of analog inputs	Maximum error 0.5% of full scale
Bandwidth	100 Hz

The analog inputs are galvanically isolated from the supply voltage (PELV) and other high-voltage terminals.

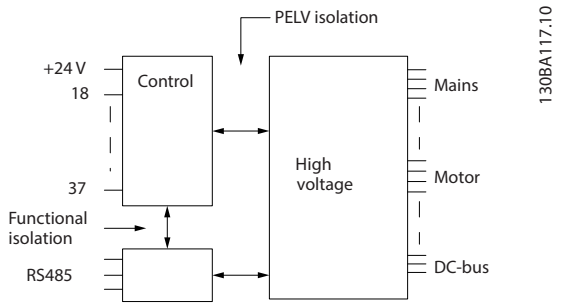

Illustration 9.1 PELV Isolation

Pulse inputs	
Programmable pulse inputs	2
Terminal number pulse	29, 33
Maximum frequency at terminal 29, 33	110 kHz (push-pull driven)
Maximum frequency at terminal 29, 33	5 kHz (open collector)
Minimum frequency at terminal 29, 33	4 Hz
Voltage level	See *Digital Inputs* in *chapter 9.6 Control Input/Output and Control Data*
Maximum voltage on input	28 V DC
Input resistance, R_i	Approximately 4 kΩ
Pulse input accuracy (0.1–1 kHz)	Maximum error: 0.1% of full scale

9

Analog output	
Number of programmable analog outputs	1
Terminal number	42
Current range at analog output	0/4-20 mA
Maximum resistor load to common at analog output	500 Ω
Accuracy on analog output	Maximum error: 0.8% of full scale
Resolution on analog output	8 bit

The analog output is galvanically isolated from the supply voltage (PELV) and other high-voltage terminals.

Control card, RS485 serial communication	
Terminal number	68 (P, TX+, RX+), 69 (N, TX-, RX-)
Terminal number 61	Common for terminals 68 and 69

The RS485 serial communication circuit is functionally separated from other central circuits and galvanically isolated from the supply voltage (PELV).

Digital output	
Programmable digital/pulse outputs	2
Terminal number	27, 29[1)]
Voltage level at digital/frequency output	0–24 V
Maximum output current (sink or source)	40 mA
Maximum load at frequency output	1 kΩ
Maximum capacitive load at frequency output	10 nF
Minimum output frequency at frequency output	0 Hz
Maximum output frequency at frequency output	32 kHz
Accuracy of frequency output	Maximum error: 0.1% of full scale
Resolution of frequency outputs	12 bit

1) Terminals 27 and 29 can also be programmed as inputs.

The digital output is galvanically isolated from the supply voltage (PELV) and other high-voltage terminals.

Control card, 24 V DC output	
Terminal number	12, 13
Maximum load	200 mA

The 24 V DC supply is galvanically isolated from the supply voltage (PELV), but has the same potential as the analog and digital inputs and outputs.

Relay outputs	
Programmable relay outputs	2
Maximum cross-section to relay terminals	2.5 mm^2 (12 AWG)
Minimum cross-section to relay terminals	0.2 mm^2 (30 AWG)
Length of stripped wire	8 mm (0.3 in)
Relay 01 terminal number	1–3 (break), 1–2 (make)
Maximum terminal load (AC-1)[1] on 1–2 (NO) (Resistive load)[2], [3]	400 V AC, 2 A
Maximum terminal load (AC-15)[1] on 1–2 (NO) (Inductive load @ cosφ 0.4)	240 V AC, 0.2 A
Maximum terminal load (DC-1)[1] on 1–2 (NO) (Resistive load)	80 V DC, 2 A
Maximum terminal load (DC-13)[1] on 1–2 (NO) (Inductive load)	24 V DC, 0.1 A
Maximum terminal load (AC-1)[1] on 1–3 (NC) (Resistive load)	240 V AC, 2 A
Maximum terminal load (AC-15)[1] on 1–3 (NC) (Inductive load @ cosφ 0.4)	240 V AC, 0.2 A
Maximum terminal load (DC-1)[1] on 1–3 (NC) (Resistive load)	50 V DC, 2 A
Maximum terminal load (DC-13)[1] on 1–3 (NC) (Inductive load)	24 V DC, 0.1 A
Minimum terminal load on 1–3 (NC), 1–2 (NO)	24 V DC 10 mA, 24 V AC 2 mA
Environment according to EN 60664-1	Overvoltage category III/pollution degree 2
Relay 02 terminal number	4–6 (break), 4–5 (make)
Maximum terminal load (AC-1)[1] on 4–5 (NO) (Resistive load)[2], [3]	400 V AC, 2 A
Maximum terminal load (AC-15)[1] on 4–5 (NO) (Inductive load @ cosφ 0.4)	240 V AC, 0.2 A
Maximum terminal load (DC-1)[1] on 4–5 (NO) (Resistive load)	80 V DC, 2 A
Maximum terminal load (DC-13)[1] on 4–5 (NO) (Inductive load)	24 V DC, 0.1 A
Maximum terminal load (AC-1)[1] on 4–6 (NC) (Resistive load)	240 V AC, 2 A
Maximum terminal load (AC-15)[1] on 4–6 (NC) (Inductive load @ cosφ 0.4)	240 V AC, 0.2 A
Maximum terminal load (DC-1)[1] on 4–6 (NC) (Resistive load)	50 V DC, 2 A
Maximum terminal load (DC-13)[1] on 4–6 (NC) (Inductive load)	24 V DC, 0.1 A
Minimum terminal load on 4–6 (NC), 4–5 (NO)	24 V DC 10 mA, 24 V AC 2 mA
Environment according to EN 60664-1	Overvoltage category III/pollution degree 2

1) IEC 60947 part 4 and 5.
The relay contacts are galvanically isolated from the rest of the circuit by reinforced isolation (PELV).
2) Overvoltage Category II.
3) UL applications 300 V AC 2 A.

Control card, +10 V DC output	
Terminal number	50
Output voltage	10.5 V ±0.5 V
Maximum load	25 mA

The 10 V DC supply is galvanically isolated from the supply voltage (PELV) and other high-voltage terminals.

Control characteristics	
Resolution of output frequency at 0–1000 Hz	±0.003 Hz
System response time (terminals 18, 19, 27, 29, 32, 33)	≤2 m/s
Speed control range (open loop)	1:100 of synchronous speed
Speed accuracy (open loop)	30–4000 RPM: Maximum error of ±8 RPM

All control characteristics are based on a 4-pole asynchronous motor.

Control card performance	
Scan interval	5 M/S

Control card, USB serial communication	
USB standard	1.1 (full speed)
USB plug	USB type B device plug

NOTICE

Connection to PC is carried out via a standard host/device USB cable.
The USB connection is galvanically isolated from the supply voltage (PELV) and other high-voltage terminals.
The USB connection is not galvanically isolated from ground. Use only isolated laptop/PC as connection to the USB connector on the drive or an isolated USB cable/converter.

9.7 Fuses

Fuses ensure that possible damage to the drive is limited to damages inside the unit. To ensure compliance with EN 50178, use identical Bussmann fuses as replacements. Refer to *Table 9.6*.

NOTICE

Use of fuses on the supply side is mandatory for IEC 60364 (CE) and NEC 2009 (UL) compliant installations.

Input voltage (V)	Bussmann part number
380–500	170M7309
525–690	170M7342

Table 9.6 Fuse Options

The fuses listed in *Table 9.6* are suitable for use on a circuit capable of delivering 100000 A_{rms} (symmetrical), depending on the drive voltage rating. With the proper fusing, the drive short-circuit current rating (SCCR) is 100000 A_{rms}. E1h and E2h drives are supplied with internal drive fusing to meet the 100 kA SCCR. E3h and E4h drives must be fitted with Type aR fuses to meet the 100 kA SCCR.

NOTICE

DISCONNECT SWITCH

All units ordered and supplied with a factory-installed disconnect switch require Class L branch circuit fusing to meet the 100 kA SCCR for the drive. If a circuit breaker is used, the SCCR rating is 42 kA. The specific Class L fuse is determined by the input voltage and power rating of the drive. The input voltage and power rating is found on the product nameplate. See *chapter 4.1 Items Supplied*.

Input voltage (V)	Power rating (kW)	Short circuit rating (A)	Required protection
380–480	355–450	42000	Circuit breaker
		100000	Class L fuse, 800 A
380–480	500–560	42000	Circuit breaker
		100000	Class L fuse, 1200 A
525–690	450–630	42000	Circuit breaker
		10000	Class L fuse, 800 A
525–690	710–800	42000	Circuit breaker
		100000	Class L fuse, 1200 A

9.8 Enclosure Dimensions

9.8.1 E1h Exterior Dimensions

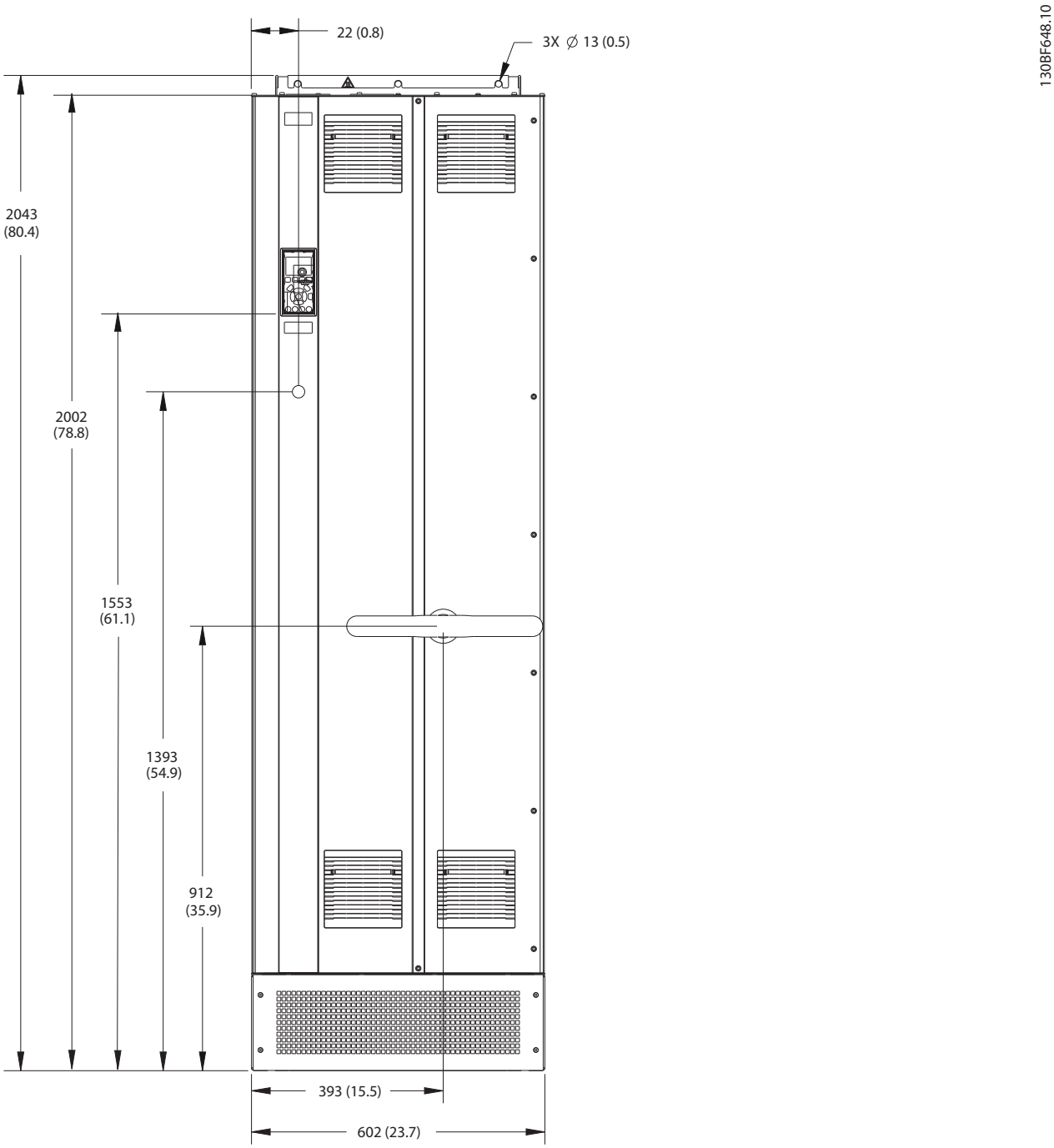

Illustration 9.2 Front View of E1h

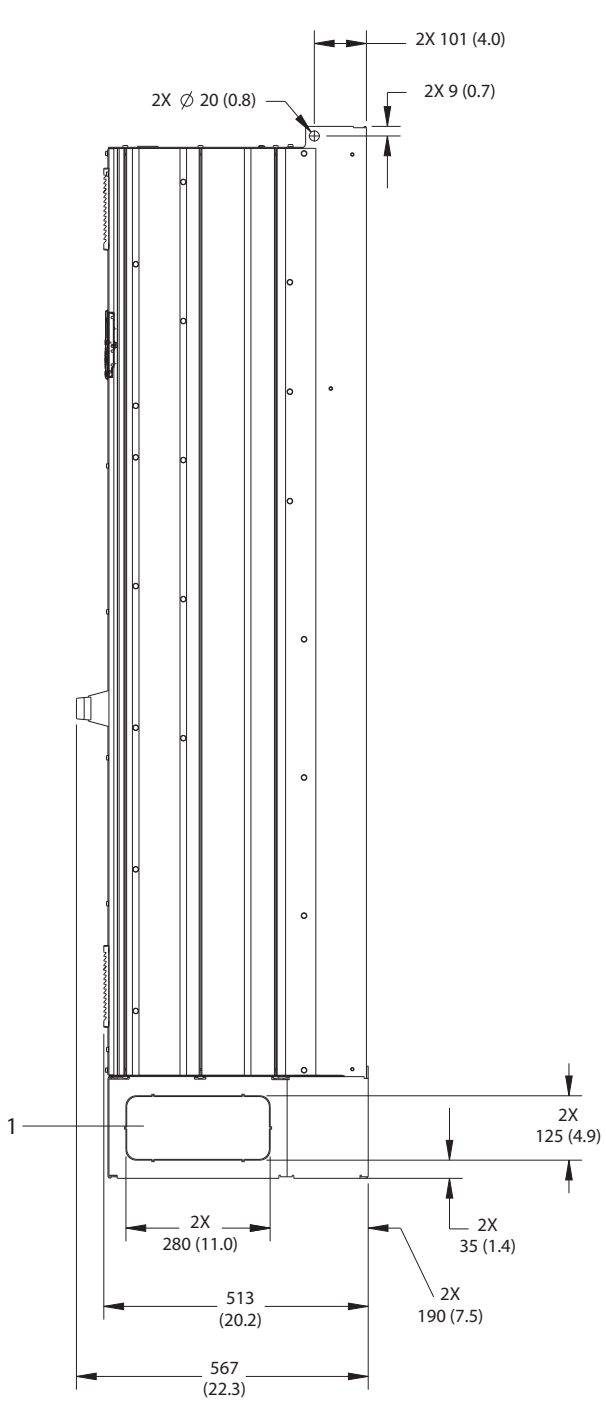

1	Knockout panel

Illustration 9.3 Side View of E1h

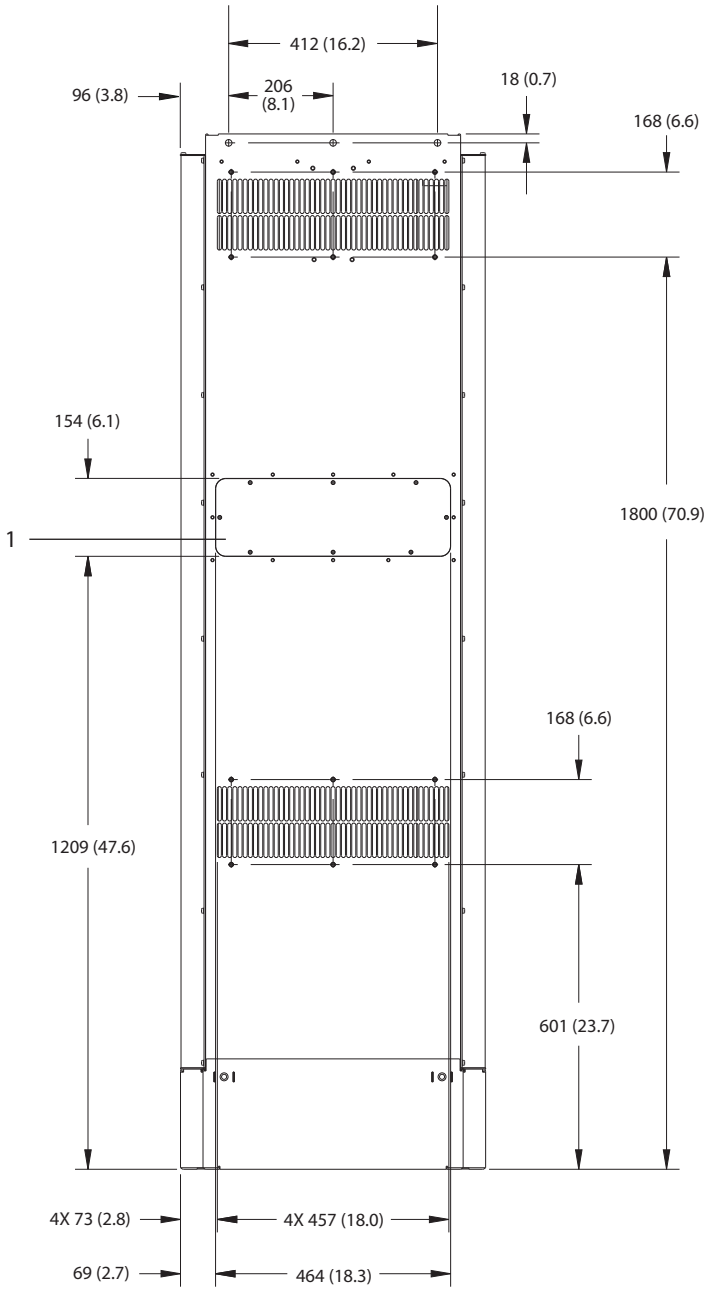

1	Heat sink access panel (optional)

Illustration 9.4 Back View of E1h

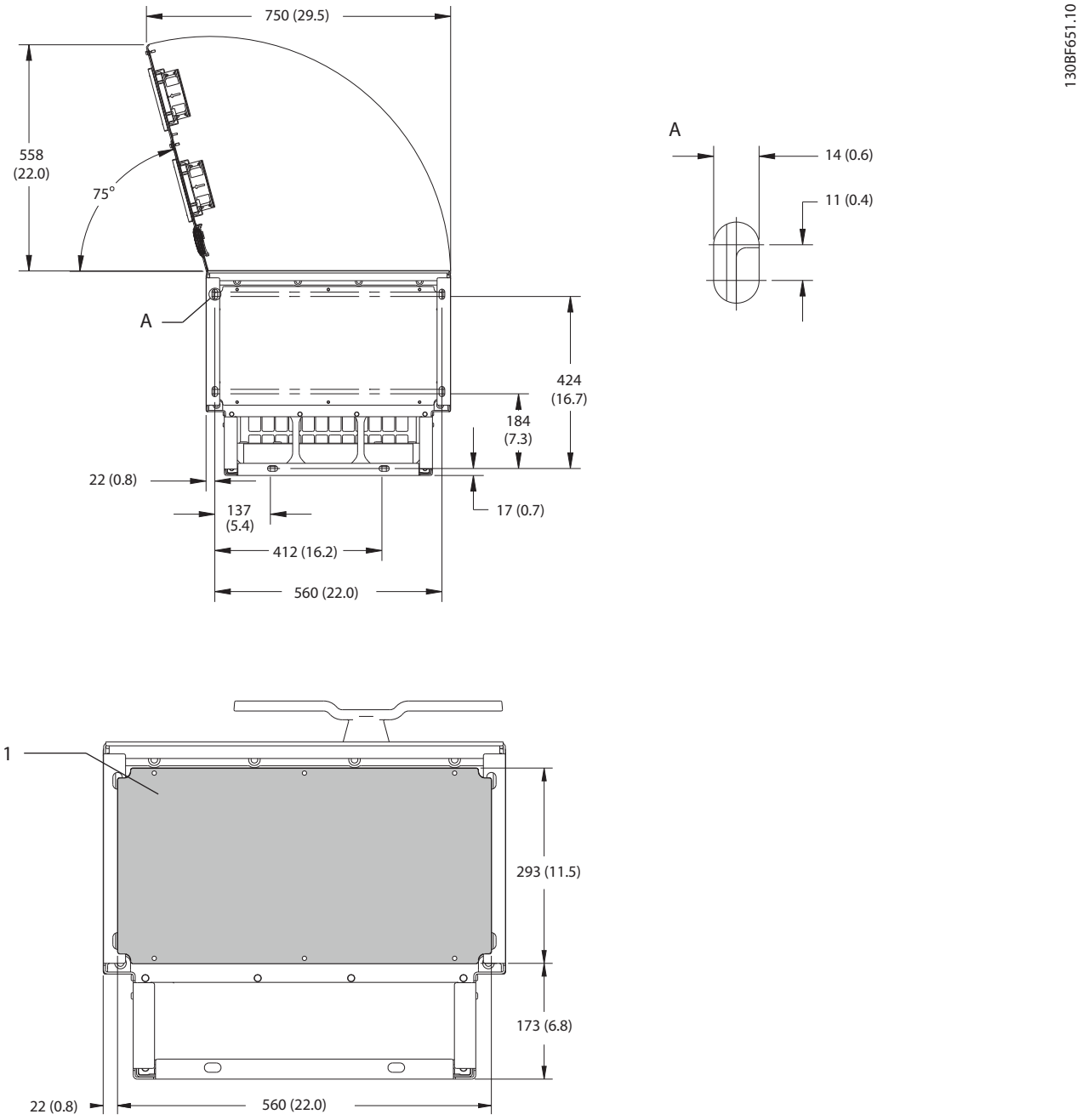

1	Gland plate

Illustration 9.5 Door Clearance and Gland Plate Dimensions for E1h

9.8.2 E2h Exterior Dimensions

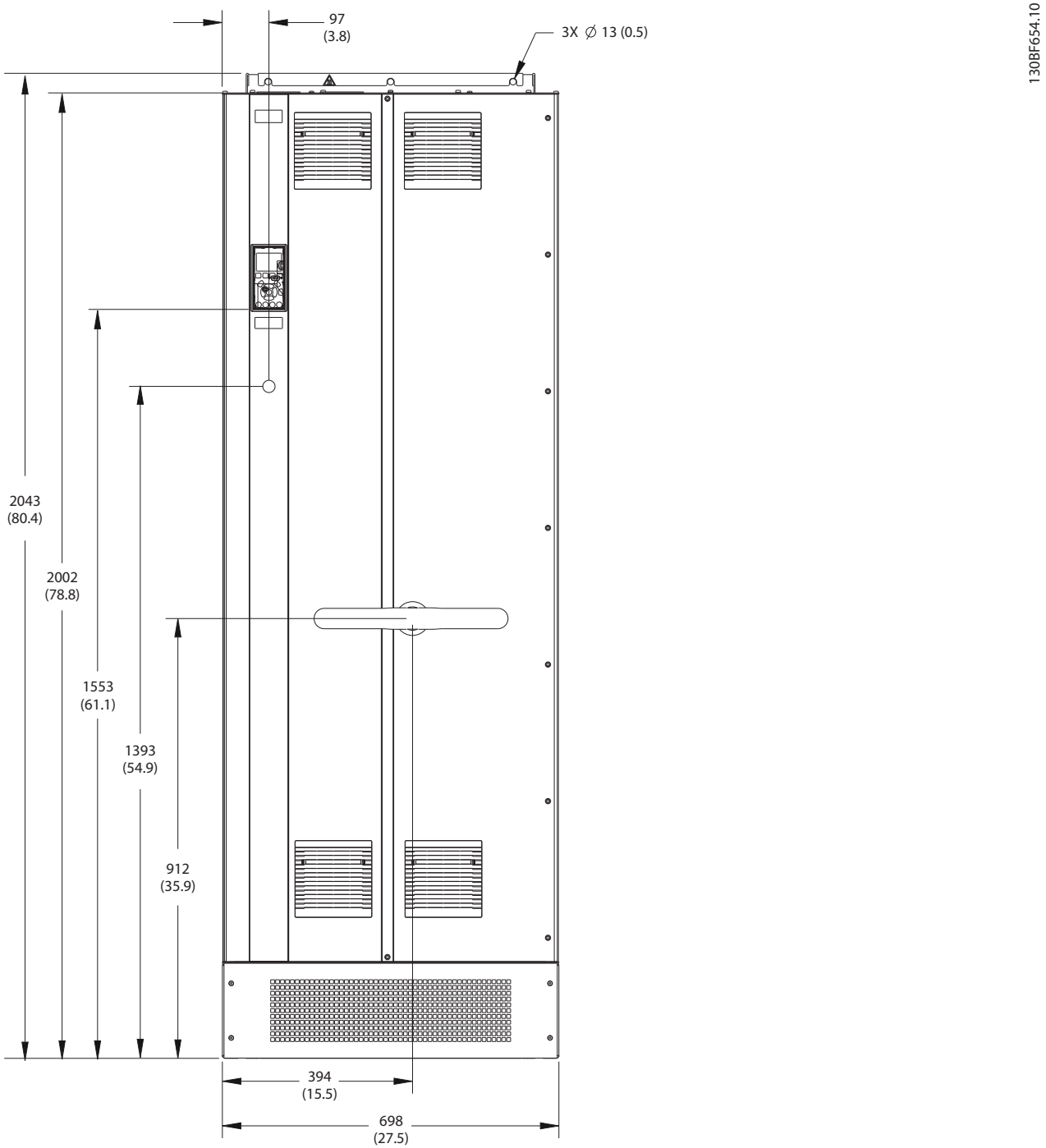

Illustration 9.6 Front View of E2h

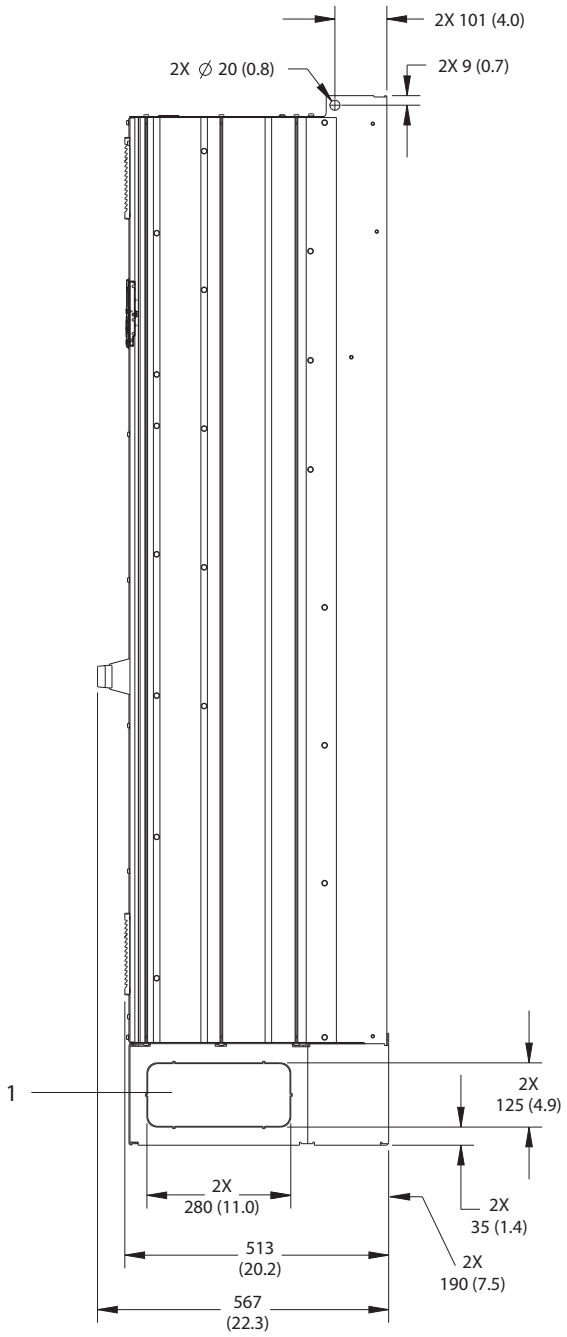

1	Knockout panel

Illustration 9.7 Side View of E2h

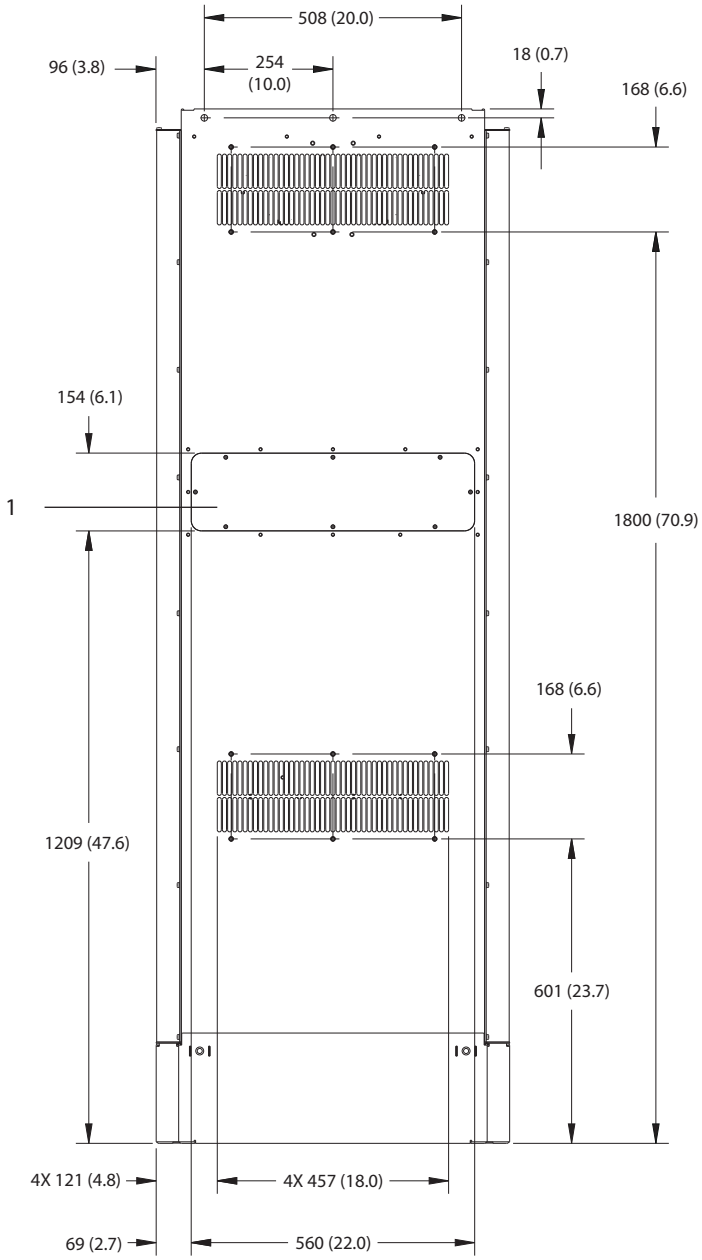

1	Heat sink access panel (optional)

Illustration 9.8 Back View of E2h

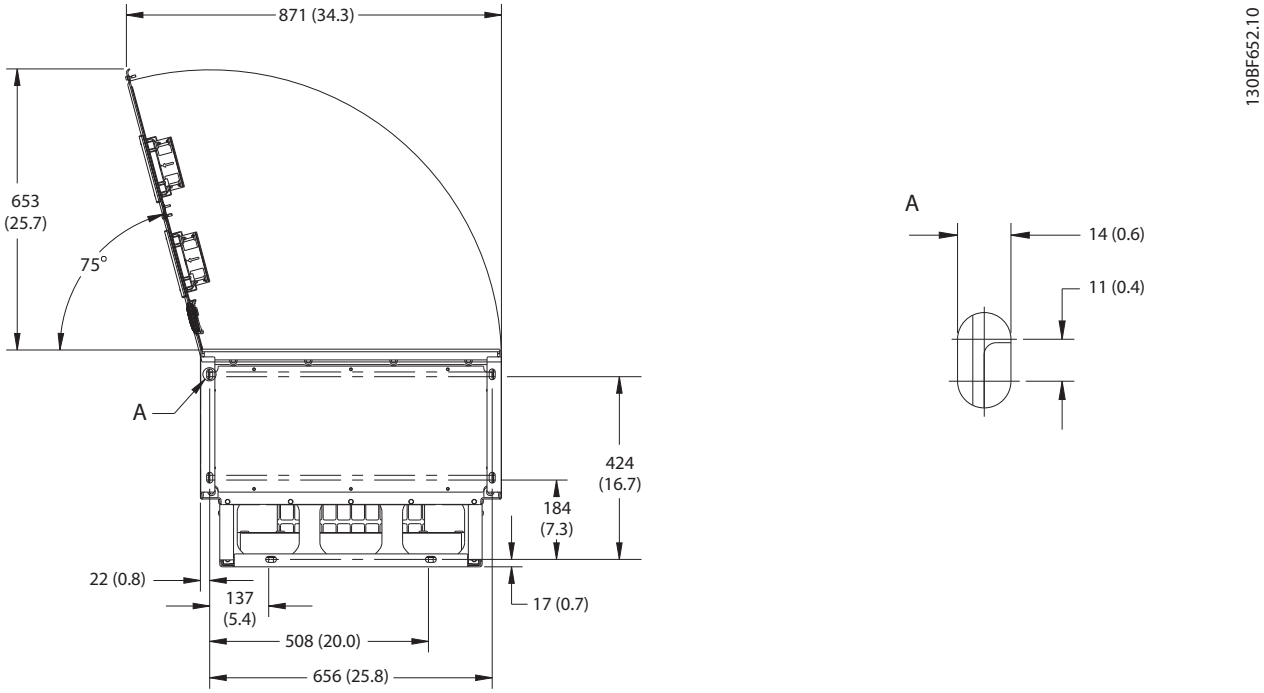

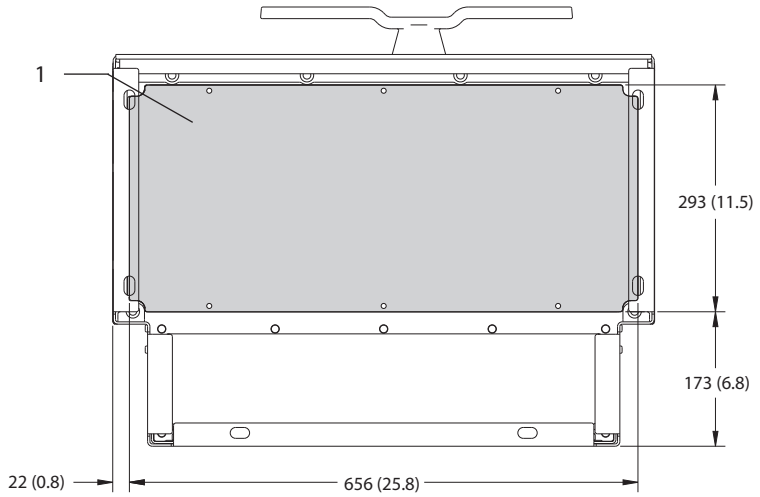

1	Gland plate

Illustration 9.9 Door Clearance and Gland Plate Dimensions for E2h

9.8.3 E3h Exterior Dimensions

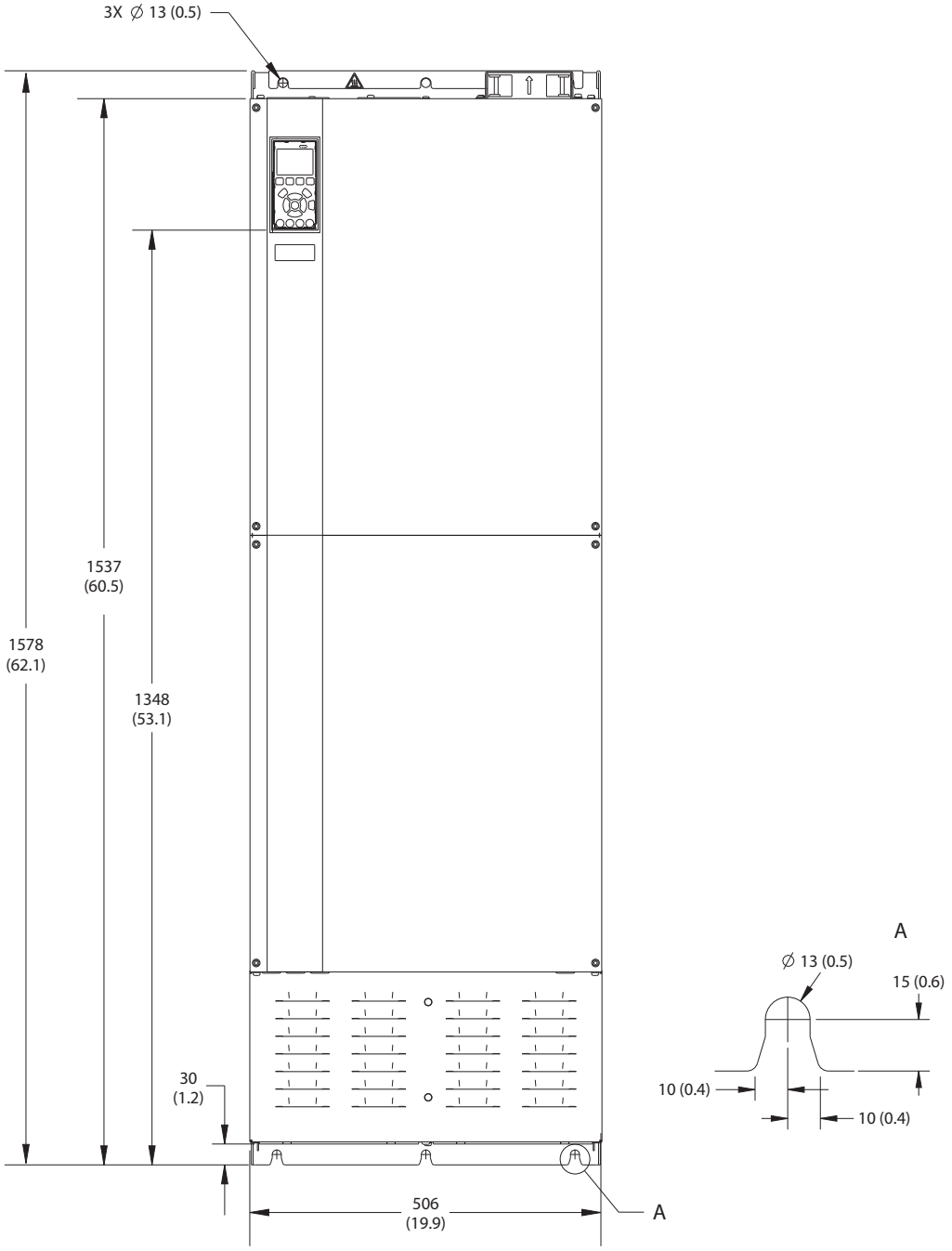

Illustration 9.10 Front View of E3h

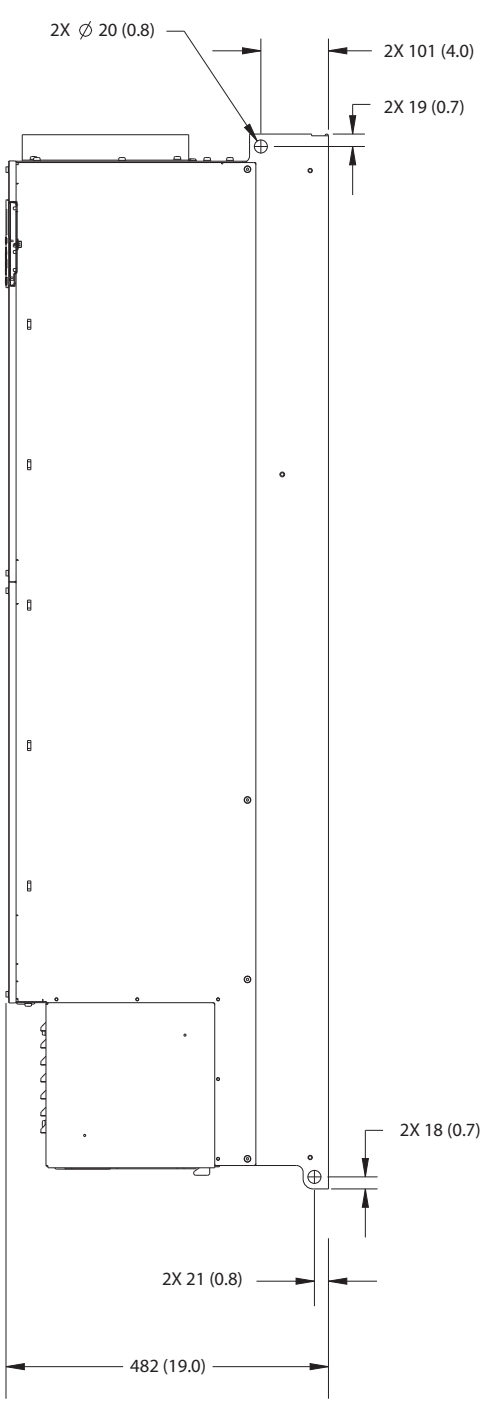

Illustration 9.11 Side View of E3h

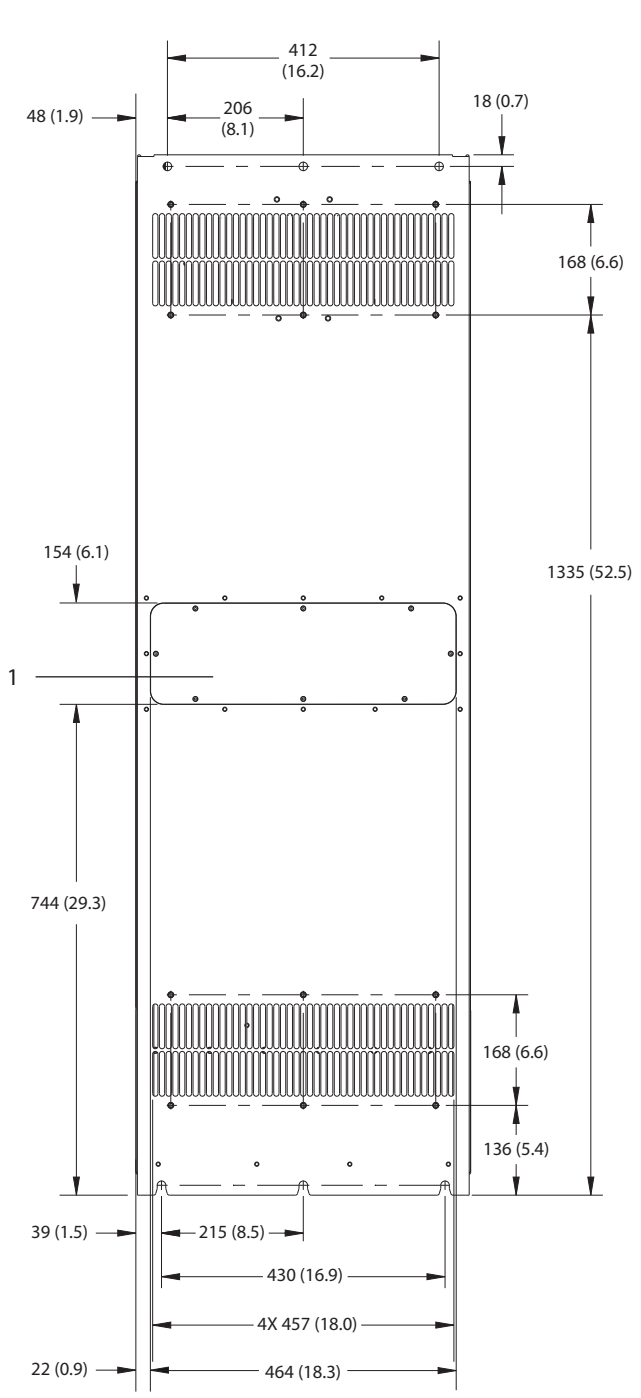

1	Heat sink access panel (optional)

Illustration 9.12 Back View of E3h

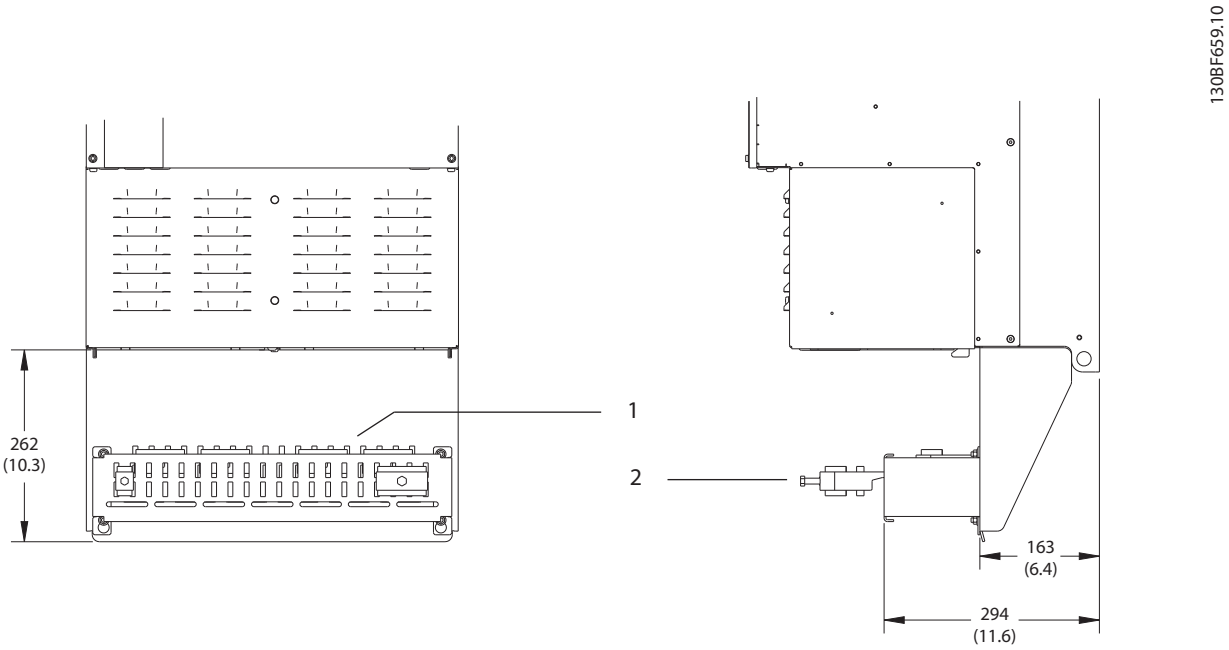

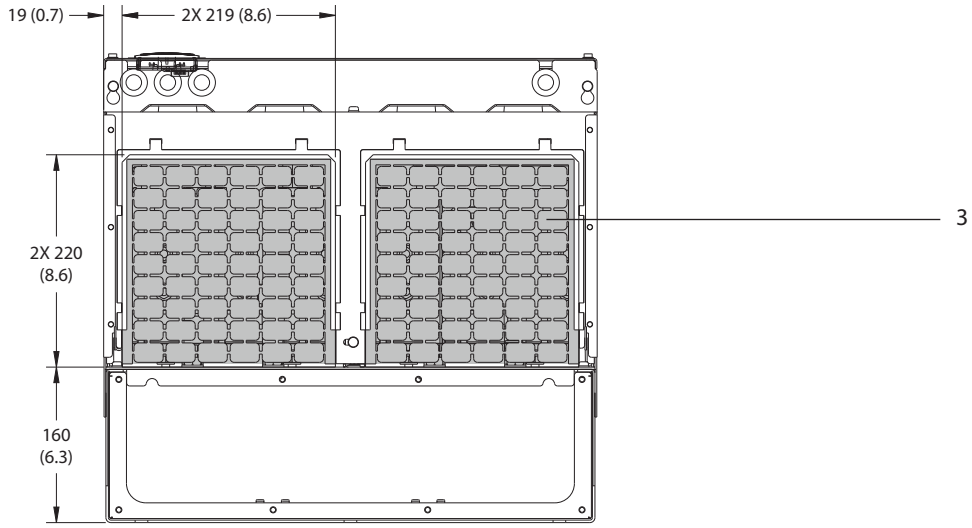

1	RFI shield termination (standard with RFI option)
2	Cable/EMC clamp
3	Gland plate

Illustration 9.13 RFI Shield Termination and Gland Plate Dimensions for E3h

9.8.4 E4h Exterior Dimensions

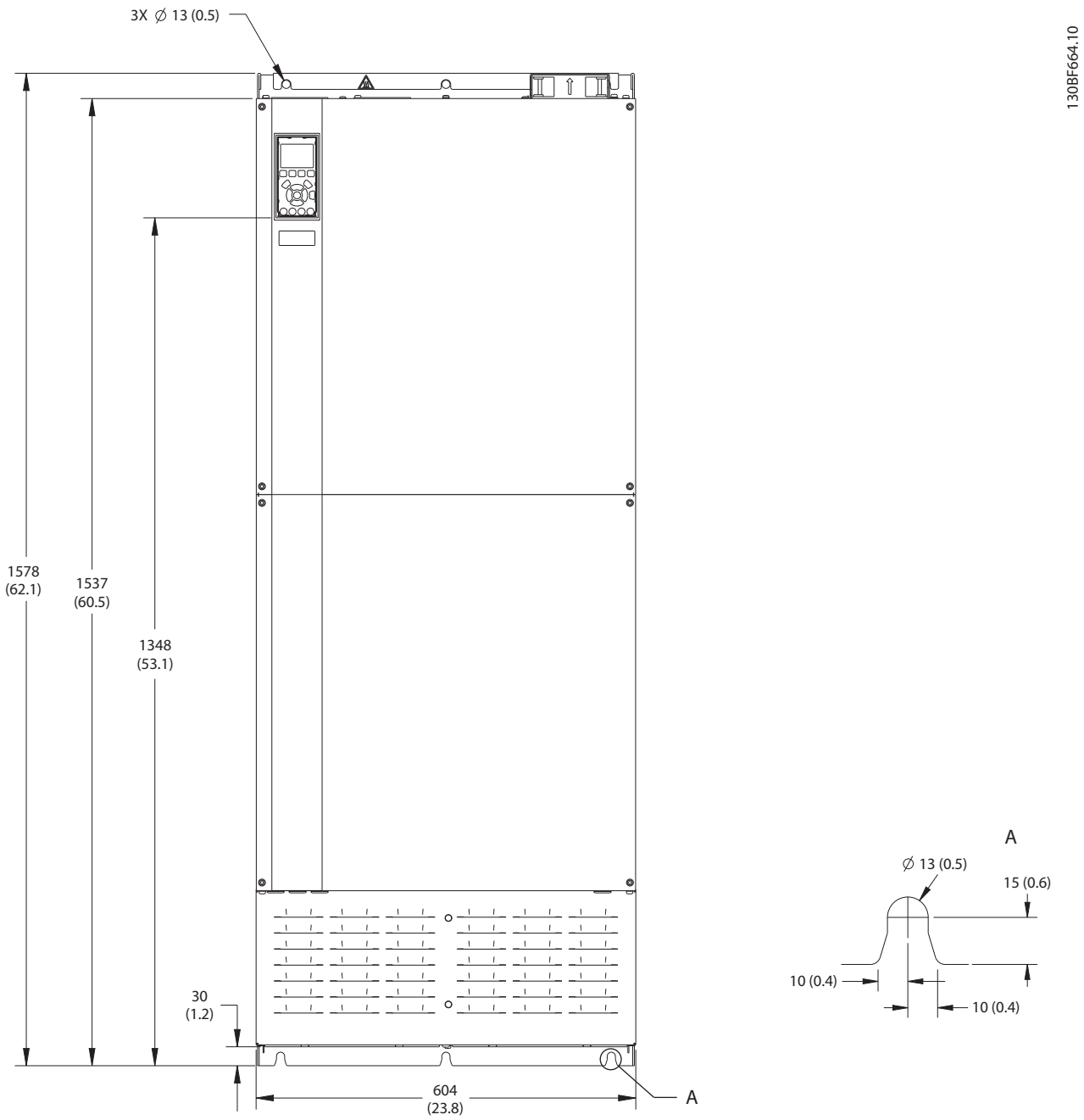

Illustration 9.14 Front View of E4h

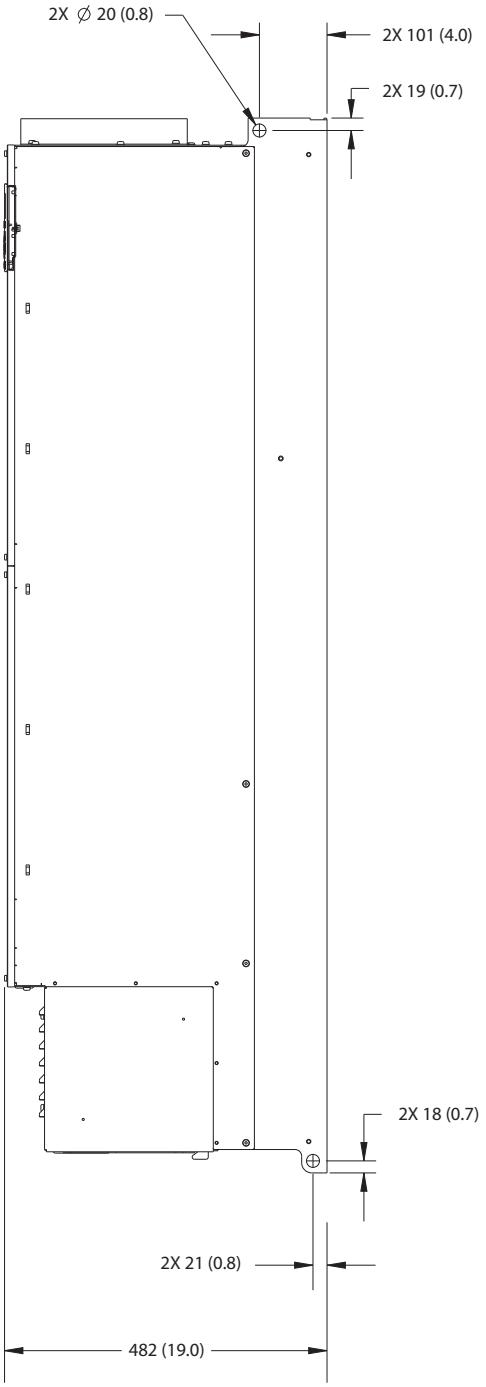

Illustration 9.15 Side View of E4h

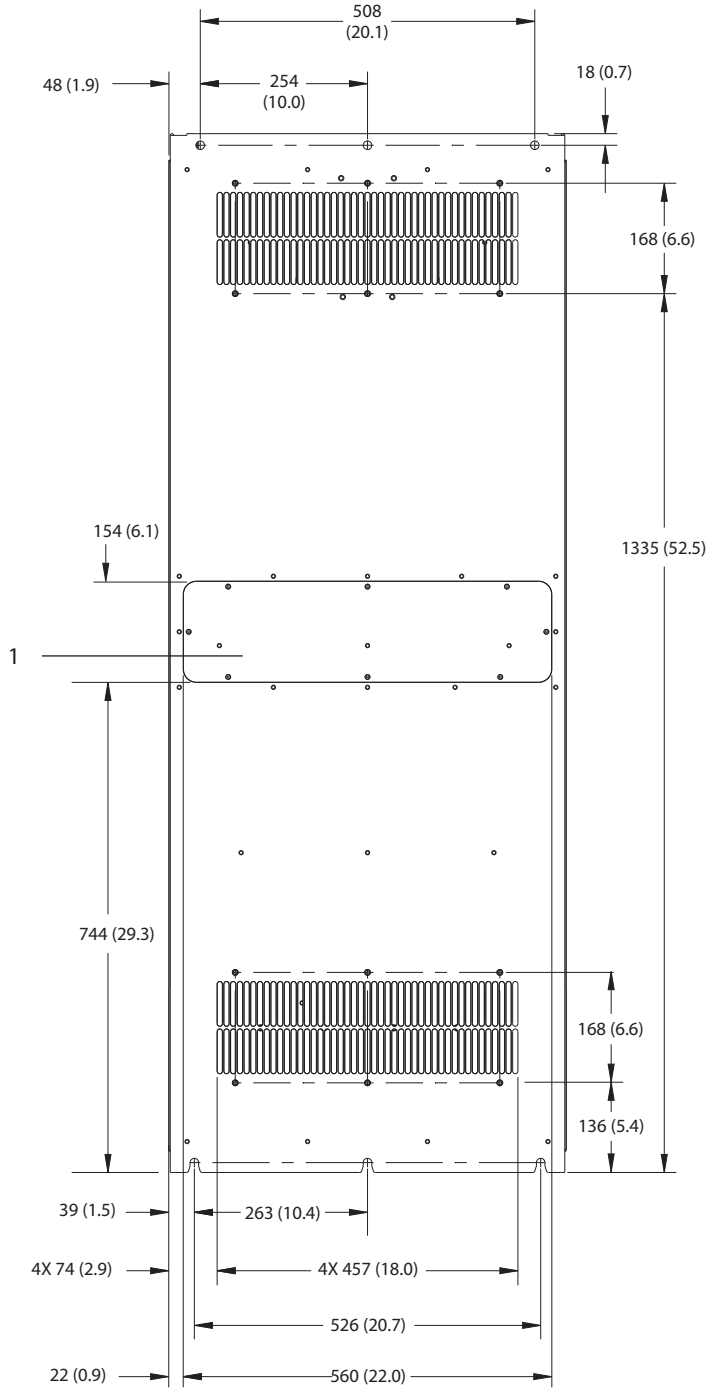

1	Heat sink access panel (optional)

Illustration 9.16 Back View of E4h

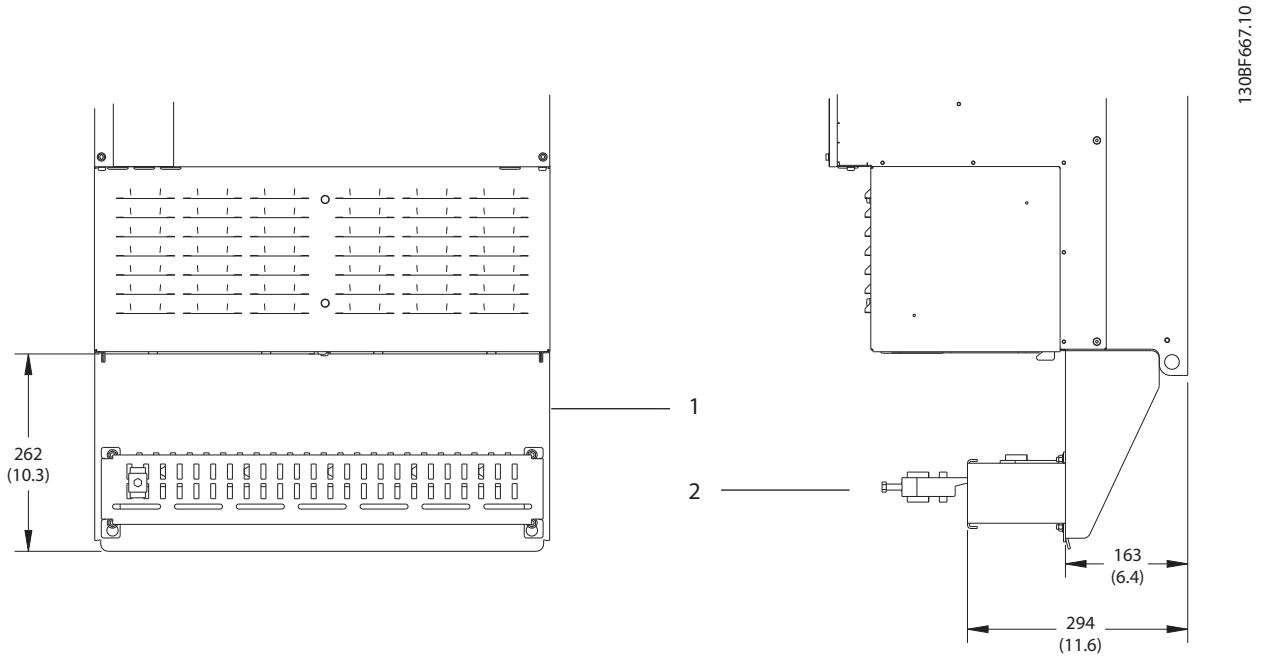

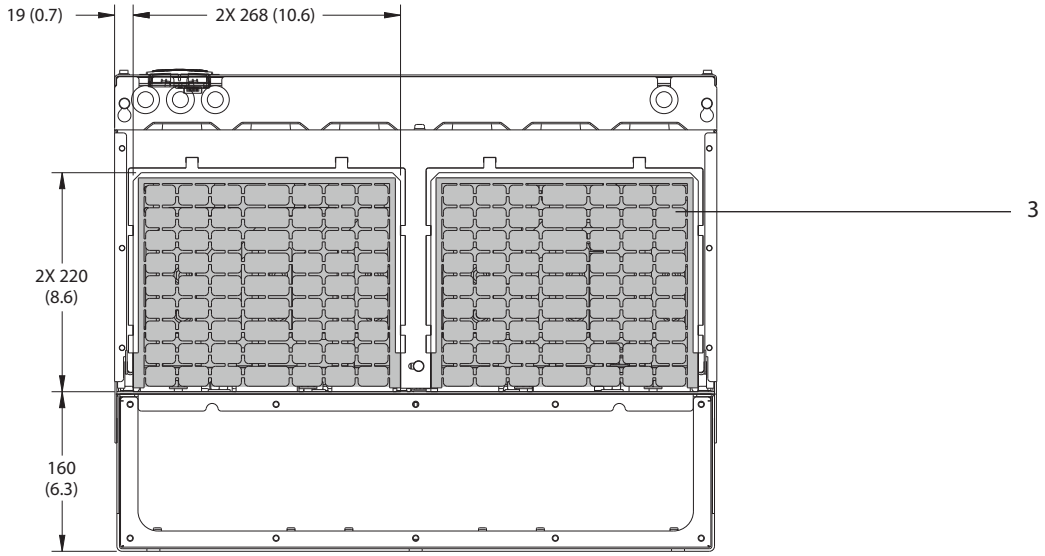

1	RFI shield termination (standard with RFI option)
2	Cable/EMC clamp
3	Gland plate

Illustration 9.17 RFI Shield Termination and Gland Plate Dimensions for E4h

9.9 Enclosure Airflow

9.9.1 Airflow for E1h–E4h Enclosures

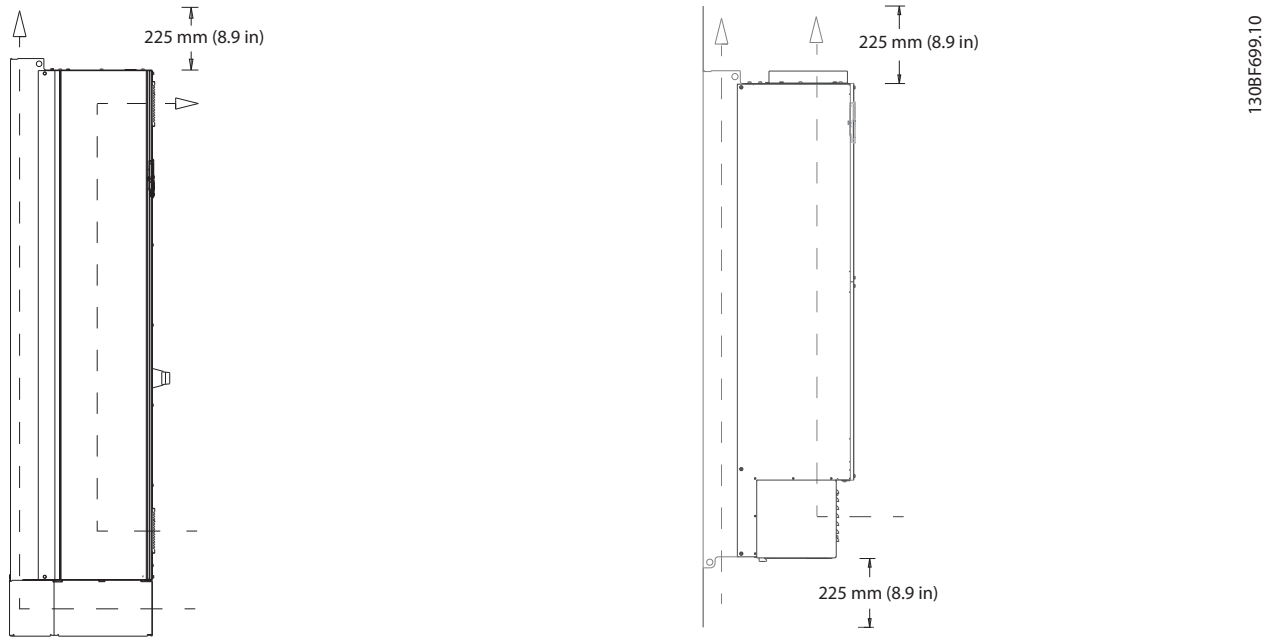

Illustration 9.18 Standard Airflow Configuration for E1h/E2h (Left) and E3h/E4h (Right)

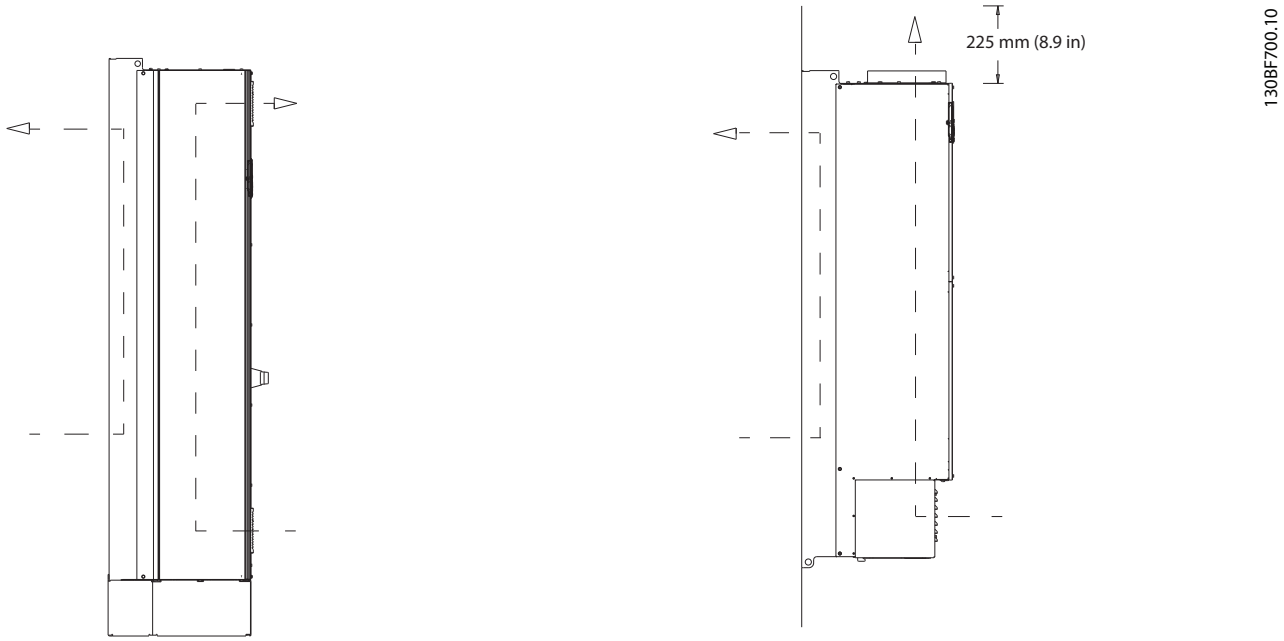

Illustration 9.19 Optional Airflow Configuration Through the Back Wall for E1h/E2h (Left) and E3h/E4h (Right)

9.10 Fastener Torque Ratings

Apply the correct torque when tightening fasteners in the locations that are listed in *Table 9.7*. Too low or too high torque when fastening an electrical connection results in a bad electrical connection. To ensure correct torque, use a torque wrench.

Location	Bolt size	Torque [Nm (in-lb)]
Mains terminals	M10/M12	19 (168)/37 (335)
Motor terminals	M10/M12	19 (168)/37 (335)
Ground terminals	M8/M10	9.6 (84)/19.1 (169)
Brake terminals	M8	9.6 (84)
Load sharing terminals	M10/M12	19 (168)/37 (335)
Regeneration terminals (Enclosures E1h/E2h)	M8	9.6 (84)
Regeneration terminals (Enclosures E3h/E4h)	M10/M12	19 (168)/37 (335)
Relay terminals	_	0.5 (4)
Door/panel cover	M5	2.3 (20)
Gland plate	M5	2.3 (20)
Heat sink access panel	M5	3.9 (35)
Serial communication cover	M5	2.3 (20)

Table 9.7 Fastener Torque Ratings

10 Appendix

10.1 Abbreviations and Conventions

°C	Degrees Celsius
°F	Degrees Fahrenheit
Ω	Ohm
AC	Alternating current
AEO	Automatic energy optimization
ACP	Application control processor
AMA	Automatic motor adaptation
AWG	American wire gauge
CPU	Central processing unit
CSIV	Customer-specific initialization values
CT	Current transformer
DC	Direct current
DVM	Digital voltmeter
EEPROM	Electrically erasable programmable read-only memory
EMC	Electromagnetic compatibility
EMI	Electromagnetic interference
ESD	Electrostatic discharge
ETR	Electronic thermal relay
$f_{M,N}$	Nominal motor frequency
HF	High frequency
HVAC	Heating, ventilation, and air conditioning
Hz	Hertz
I_{LIM}	Current limit
I_{INV}	Rated inverter output current
$I_{M,N}$	Nominal motor current
$I_{VLT,MAX}$	Maximum output current
$I_{VLT,N}$	Rated output current supplied by the drive
IEC	International electrotechnical commission
IGBT	Insulated-gate bipolar transistor
I/O	Input/output
IP	Ingress protection
kHz	Kilohertz
kW	Kilowatt
L_d	Motor d-axis inductance
L_q	Motor q-axis inductance
LC	Inductor-capacitor
LCP	Local control panel
LED	Light-emitting diode
LOP	Local operation pad
mA	Milliamp
MCB	Miniature circuit breakers
MCO	Motion control option
MCP	Motor control processor
MCT	Motion control tool
MDCIC	Multi-drive control interface card
mV	Millivolts
NEMA	National Electrical Manufacturers Association
NTC	Negative temperature coefficient
$P_{M,N}$	Nominal motor power
PCB	Printed circuit board
PE	Protective earth
PELV	Protective extra low voltage
PID	Proportional integral derivative
PLC	Programmable logic controller
P/N	Part number
PROM	Programmable read-only memory
PS	Power section
PTC	Positive temperature coefficient
PWM	Pulse width modulation
R_s	Stator resistance
RAM	Random-access memory
RCD	Residual current device
Regen	Regenerative terminals
RFI	Radio frequency interference
RMS	Root means square (cyclically alternating electric current)
RPM	Revolutions per minute
SCR	Silicon controlled rectifier
SMPS	Switch mode power supply
S/N	Serial number
STO	Safe Torque Off
T_{LIM}	Torque limit
$U_{M,N}$	Nominal motor voltage
V	Volt
VVC	Voltage vector control
X_h	Motor main reactance

Table 10.1 Abbreviations, Acronyms, and Symbols

Conventions

- Numbered lists indicate procedures.
- Bullet lists indicate other information and description of illustrations.
- Italicized text indicates:
  - Cross reference
  - Link
  - Footnote
  - Parameter name
  - Parameter group name
  - Parameter option
- All dimensions are in mm (inch).

10

10.2 International/North American Default Parameter Settings

Setting *parameter 0-03 Regional Settings* to *[0] International* or *[1] North America* changes the default settings for some parameters. *Table 10.2* lists those parameters that are effected.

Changes made to default settings are stored and available for viewing in the quick menu along with any programming entered into parameters.

Parameter	International default parameter value	North American default parameter value
Parameter 0-03 Regional Settings	International	North America
Parameter 0-71 Date Format	DD-MM-YYYY	MM/DD/YYYY
Parameter 0-72 Time Format	24 h	12 h
Parameter 1-20 Motor Power [kW]	1)	1)
Parameter 1-21 Motor Power [HP]	2)	2)
Parameter 1-22 Motor Voltage	230 V/400 V/575 V	208 V/460 V/575 V
Parameter 1-23 Motor Frequency	50 Hz	60 Hz
Parameter 3-03 Maximum Reference	50 Hz	60 Hz
Parameter 3-04 Reference Function	Sum	External/Preset
*Parameter 4-13 Motor Speed High Limit [RPM]*3)	1500 RPM	1800 RPM
*Parameter 4-14 Motor Speed High Limit [Hz]*4)	50 Hz	60 Hz
Parameter 4-19 Max Output Frequency	100 Hz	120 Hz
Parameter 4-53 Warning Speed High	1500 RPM	1800 RPM
Parameter 5-12 Terminal 27 Digital Input	Coast inverse	External interlock
Parameter 5-40 Function Relay	Alarm	No alarm
Parameter 6-15 Terminal 53 High Ref./Feedb. Value	50	60
Parameter 6-50 Terminal 42 Output	Speed 0-HighLim	Speed 4-20 mA
Parameter 14-20 Reset Mode	Manual reset	Infinite auto reset
*Parameter 22-85 Speed at Design Point [RPM]*3)	1500 RPM	1800 RPM
Parameter 22-86 Speed at Design Point [Hz]	50 Hz	60 Hz
Parameter 24-04 Fire Mode Max Reference	50 Hz	60 Hz

Table 10.2 International/North American Default Parameter Settings

1) Parameter 1-20 Motor Power [kW] is only visible when parameter 0-03 Regional Settings is set to [0] International.

2) Parameter 1-21 Motor Power [HP], is only visible when parameter 0-03 Regional Settings is set to [1] North America.

3) This parameter is only visible when parameter 0-02 Motor Speed Unit is set to [0] RPM.

4) This parameter is only visible when parameter 0-02 Motor Speed Unit is set to [1] Hz.

10.3 Parameter Menu Structure

10.3.1 FC 202 Main menu

0-**	**Operation / Display**
0-0*	**Basic Settings**
0-01	Language
0-02	Motor Speed Unit
0-03	Regional Settings
0-04	Operating State at Power-up
0-05	Local Mode Unit
0-1*	**Set-up Operations**
0-10	Active Set-up
0-11	Programming Set-up
0-12	This Set-up Linked to
0-13	Readout: Linked Set-ups
0-14	Readout: Prog. Set-ups / Channel
0-2*	**LCP Display**
0-20	Display Line 1.1 Small
0-21	Display Line 1.2 Small
0-22	Display Line 1.3 Small
0-23	Display Line 2 Large
0-24	Display Line 3 Large
0-25	My Personal Menu
0-3*	**LCP Custom Readout**
0-30	Custom Readout Unit
0-31	Custom Readout Min Value
0-32	Custom Readout Max Value
0-37	Display Text 1
0-38	Display Text 2
0-39	Display Text 3
0-4*	**LCP Keypad**
0-40	[Hand on] Key on LCP
0-41	[Off] Key on LCP
0-42	[Auto on] Key on LCP
0-43	[Reset] Key on LCP
0-44	[Off/Reset] Key on LCP
0-45	[Drive Bypass] Key on LCP
0-5*	**Copy/Save**
0-50	LCP Copy
0-51	Set-up Copy
0-6*	**Password**
0-60	Main Menu Password
0-61	Access to Main Menu w/o Password
0-65	Personal Menu Password
0-66	Access to Personal Menu w/o Password
0-67	Bus Password Access
0-7*	**Clock Settings**
0-70	Date and Time
0-71	Date Format
0-72	Time Format
0-74	DST/Summertime
0-76	DST/Summertime Start
0-77	DST/Summertime End
0-79	Clock Fault
0-81	Working Days
0-82	Additional Working Days
0-83	Additional Non-Working Days
0-89	Date and Time Readout
1-**	**Load and Motor**
1-0*	**General Settings**
1-00	Configuration Mode
1-01	Motor Control Principle
1-03	Torque Characteristics
1-04	Overload Mode
1-06	Clockwise Direction
1-1*	**Motor Selection**
1-10	Motor Construction
1-1*	**VVC+ PM/SYN RM**
1-14	Damping Gain
1-15	Low Speed Filter Time Const.
1-16	High Speed Filter Time Const.
1-17	Voltage filter time const.
1-2*	**Motor Data**
1-20	Motor Power [kW]
1-21	Motor Power [HP]
1-22	Motor Voltage
1-23	Motor Frequency
1-24	Motor Current
1-25	Motor Nominal Speed
1-26	Motor Cont. Rated Torque
1-28	Motor Rotation Check
1-29	Automatic Motor Adaptation (AMA)
1-3*	**Adv. Motor Data**
1-30	Stator Resistance (Rs)
1-31	Rotor Resistance (Rr)
1-33	Stator Leakage Reactance (X1)
1-34	Rotor Leakage Reactance (X2)
1-35	Main Reactance (Xh)
1-36	Iron Loss Resistance (Rfe)
1-37	d-axis Inductance (Ld)
1-38	q-axis Inductance (Lq)
1-39	Motor Poles
1-40	Back EMF at 1000 RPM
1-44	d-axis Inductance Sat. (LdSat)
1-45	q-axis Inductance Sat. (LqSat)
1-46	Position Detection Gain
1-47	Torque Calibration
1-48	Inductance Sat. Point
1-5*	**Load Indep. Setting**
1-50	Motor Magnetisation at Zero Speed
1-51	Min Speed Normal Magnetising [RPM]
1-52	Min Speed Normal Magnetising [Hz]
1-55	V/f Characteristic - V
1-56	V/f Characteristic - f
1-58	Flying Start Test Pulses Current
1-59	Flying Start Test Pulses Frequency
1-6*	**Load Depen. Setting**
1-60	Low Speed Load Compensation
1-61	High Speed Load Compensation
1-62	Slip Compensation
1-63	Slip Compensation Time Constant
1-64	Resonance Damping
1-65	Resonance Damping Time Constant
1-66	Min. Current at Low Speed
1-7*	**Start Adjustments**
1-70	PM Start Mode
1-71	Start Delay
1-72	Start Function
1-73	Flying Start
1-77	Compressor Start Max Speed [RPM]
1-78	Compressor Start Max Speed [Hz]
1-79	Pump Start Max Time to Trip
1-8*	**Stop Adjustments**
1-80	Function at Stop
1-81	Min Speed for Function at Stop [RPM]
1-82	Min Speed for Function at Stop [Hz]
1-86	Trip Speed Low [RPM]
1-87	Trip Speed Low [Hz]
1-9*	**Motor Temperature**
1-90	Motor Thermal Protection
1-91	Motor External Fan
1-93	Thermistor Source
1-94	ATEX ETR cur.lim. speed reduction
1-98	ATEX ETR interpol. points freq.
1-99	ATEX ETR interpol points current
2-**	**Brakes**
2-0*	**DC-Brake**
2-00	DC Hold/Preheat Current
2-01	DC Brake Current
2-02	DC Braking Time
2-03	DC Brake Cut In Speed [RPM]
2-04	DC Brake Cut In Speed [Hz]
2-06	Parking Current
2-07	Parking Time
2-1*	**Brake Energy Funct.**
2-10	Brake Function
2-11	Brake Resistor (ohm)
2-12	Brake Power Limit (kW)
2-13	Brake Power Monitoring
2-15	Brake Check
2-16	AC brake Max. Current
2-17	Over-voltage Control
3-**	**Reference / Ramps**
3-0*	**Reference Limits**
3-02	Minimum Reference
3-03	Maximum Reference
3-04	Reference Function
3-1*	**References**
3-10	Preset Reference
3-11	Jog Speed [Hz]
3-13	Reference Site
3-14	Preset Relative Reference
3-15	Reference 1 Source
3-16	Reference 2 Source
3-17	Reference 3 Source
3-19	Jog Speed [RPM]
3-4*	**Ramp 1**
3-41	Ramp 1 Ramp Up Time
3-42	Ramp 1 Ramp Down Time
3-5*	**Ramp 2**
3-51	Ramp 2 Ramp Up Time
3-52	Ramp 2 Ramp Down Time
3-8*	**Other Ramps**
3-80	Jog Ramp Time
3-81	Quick Stop Ramp Time
3-84	Initial Ramp Time
3-85	Check Valve Ramp Time
3-86	Check Valve Ramp End Speed [RPM]
3-87	Check Valve Ramp End Speed [HZ]
3-88	Final Ramp Time
3-9*	**Digital Pot.Meter**
3-90	Step Size
3-91	Ramp Time
3-92	Power Restore
3-93	Maximum Limit
3-94	Minimum Limit
3-95	Ramp Delay
4-**	**Limits / Warnings**
4-1*	**Motor Limits**
4-10	Motor Speed Direction
4-11	Motor Speed Low Limit [RPM]
4-12	Motor Speed Low Limit [Hz]
4-13	Motor Speed High Limit [RPM]
4-14	Motor Speed High Limit [Hz]
4-16	Torque Limit Motor Mode
4-17	Torque Limit Generator Mode
4-18	Current Limit
4-19	Max Output Frequency
4-5*	**Adj. Warnings**
4-50	Warning Current Low
4-51	Warning Current High
4-52	Warning Speed Low
4-53	Warning Speed High
4-54	Warning Reference Low
4-55	Warning Reference High
4-56	Warning Feedback Low
4-57	Warning Feedback High
4-58	Missing Motor Phase Function
4-6*	**Speed Bypass**
4-60	Bypass Speed From [RPM]
4-61	Bypass Speed From [Hz]
4-62	Bypass Speed To [RPM]
4-63	Bypass Speed To [Hz]
4-64	Semi-Auto Bypass Set-up
5-**	**Digital In/Out**
5-0*	**Digital I/O mode**
5-00	Digital I/O Mode
5-01	Terminal 27 Mode
5-02	Terminal 29 Mode
5-1*	**Digital Inputs**
5-10	Terminal 18 Digital Input
5-11	Terminal 19 Digital Input
5-12	Terminal 27 Digital Input
5-13	Terminal 29 Digital Input
5-14	Terminal 32 Digital Input
5-15	Terminal 33 Digital Input
5-16	Terminal X30/2 Digital Input
5-17	Terminal X30/3 Digital Input
5-18	Terminal X30/4 Digital Input
5-19	Terminal 37 Digital Input
5-20	Terminal X46/1 Digital Input
5-21	Terminal X46/3 Digital Input
5-22	Terminal X46/5 Digital Input
5-23	Terminal X46/7 Digital Input
5-24	Terminal X46/9 Digital Input
5-25	Terminal X46/11 Digital Input
5-26	Terminal X46/13 Digital Input
5-3*	**Digital Outputs**
5-30	Terminal 27 Digital Output
5-31	Terminal 29 Digital Output
5-32	Term X30/6 Digi Out (MCB 101)
5-33	Term X30/7 Digi Out (MCB 101)
5-4*	**Relays**
5-40	Function Relay
5-41	On Delay, Relay
5-42	Off Delay, Relay
5-5*	**Pulse Input**
5-50	Term. 29 Low Frequency
5-51	Term. 29 High Frequency
5-52	Term. 29 Low Ref./Feedb. Value
5-53	Term. 29 High Ref./Feedb. Value
5-54	Pulse Filter Time Constant #29
5-55	Term. 33 Low Frequency
5-56	Term. 33 High Frequency
5-57	Term. 33 Low Ref./Feedb. Value
5-58	Term. 33 High Ref./Feedb. Value
5-59	Pulse Filter Time Constant #33
5-6*	**Pulse Output**
5-60	Terminal 27 Pulse Output Variable
5-62	Pulse Output Max Freq #27
5-63	Terminal 29 Pulse Output Variable
5-65	Pulse Output Max Freq #29
5-66	Terminal X30/6 Pulse Output Variable
5-68	Pulse Output Max Freq #X30/6
5-8*	**I/O Options**
5-80	AHF Cap Reconnect Delay
5-9*	**Bus Controlled**
5-90	Digital & Relay Bus Control
5-93	Pulse Out #27 Bus Control
5-94	Pulse Out #27 Timeout Preset
5-95	Pulse Out #29 Bus Control
5-96	Pulse Out #29 Timeout Preset
5-97	Pulse Out #X30/6 Bus Control
5-98	Pulse Out #X30/6 Timeout Preset
6-**	**Analog In/Out**
6-0*	**Analog I/O Mode**
6-00	Live Zero Timeout Time
6-01	Live Zero Timeout Function
6-1*	**Analog Input 53**
6-10	Terminal 53 Low Voltage
6-11	Terminal 53 High Voltage
6-12	Terminal 53 Low Current
6-13	Terminal 53 High Current
6-14	Terminal 53 Low Ref./Feedb. Value
6-15	Terminal 53 High Ref./Feedb. Value
6-16	Terminal 53 Filter Time Constant
6-17	Terminal 53 Live Zero
6-2*	**Analog Input 54**
6-20	Terminal 54 Low Voltage
6-21	Terminal 54 High Voltage
6-22	Terminal 54 Low Current
6-23	Terminal 54 High Current
6-24	Terminal 54 Low Ref./Feedb. Value
6-25	Terminal 54 High Ref./Feedb. Value
6-26	Terminal 54 Filter Time Constant

6-27	Terminal 54 Live Zero
6-3*	**Analog Input X30/11**
6-30	Terminal X30/11 Low Voltage
6-31	Terminal X30/11 High Voltage
6-34	Term. X30/11 Low Ref./Feedb. Value
6-35	Term. X30/11 High Ref./Feedb. Value
6-36	Term. X30/11 Filter Time Constant
6-37	Term. X30/11 Live Zero
6-4*	**Analog Input X30/12**
6-40	Terminal X30/12 Low Voltage
6-41	Terminal X30/12 High Voltage
6-44	Term. X30/12 Low Ref./Feedb. Value
6-45	Term. X30/12 High Ref./Feedb. Value
6-46	Term. X30/12 Filter Time Constant
6-47	Term. X30/12 Live Zero
6-5*	**Analog Output 42**
6-50	Terminal 42 Output
6-51	Terminal 42 Output Min Scale
6-52	Terminal 42 Output Max Scale
6-53	Terminal 42 Output Bus Control
6-54	Terminal 42 Output Timeout Preset
6-55	Terminal 42 Output Filter
6-6*	**Analog Output X30/8**
6-60	Terminal X30/8 Output
6-61	Terminal X30/8 Min. Scale
6-62	Terminal X30/8 Max. Scale
6-63	Terminal X30/8 Output Bus Control
6-64	Terminal X30/8 Output Timeout Preset
6-7*	**Analog Output X45/1**
6-70	Terminal X45/1 Output
6-71	Terminal X45/1 Min. Scale
6-72	Terminal X45/1 Max. Scale
6-73	Terminal X45/1 Bus Control
6-74	Terminal X45/1 Output Timeout Preset
6-8*	**Analog Output X45/3**
6-80	Terminal X45/3 Output
6-81	Terminal X45/3 Min. Scale
6-82	Terminal X45/3 Max. Scale
6-83	Terminal X45/3 Bus Control
6-84	Terminal X45/3 Output Timeout Preset
8-**	**Comm. and Options**
8-0*	**General Settings**
8-01	Control Site
8-02	Control Source
8-03	Control Timeout Time
8-04	Control Timeout Function
8-05	End-of-Timeout Function
8-06	Reset Control Timeout
8-07	Diagnosis Trigger
8-08	Readout Filtering
8-1*	**Control Settings**
8-10	Control Profile
8-13	Configurable Status Word STW
8-14	Configurable Control Word CTW
8-17	Configurable Alarm and Warningword
8-3*	**FC Port Settings**
8-30	Protocol
8-31	Address
8-32	Baud Rate
8-33	Parity / Stop Bits
8-35	Minimum Response Delay
8-36	Max Response Delay
8-37	Maximum Inter-Char Delay
8-4*	**FC MC protocol set**
8-40	Telegram Selection
8-42	PCD Write Configuration
8-43	PCD Read Configuration
8-5*	**Digital/Bus**
8-50	Coasting Select
8-51	Quick Stop Select
8-52	DC Brake Select
8-53	Start Select
8-54	Reversing Select
8-55	Set-up Select
8-56	Preset Reference Select
8-7*	**BACnet**
8-70	BACnet Device Instance
8-72	MS/TP Max Masters
8-73	MS/TP Max Info Frames
8-74	"I-Am" Service
8-75	Initialisation Password
8-8*	**FC Port Diagnostics**
8-80	Bus Message Count
8-81	Bus Error Count
8-82	Slave Message Rcvd
8-83	Slave Error Count
8-9*	**Bus Jog / Feedback**
8-90	Bus Jog 1 Speed
8-91	Bus Jog 2 Speed
8-94	Bus Feedback 1
8-95	Bus Feedback 2
8-96	Bus Feedback 3
9-**	**PROFIdrive**
9-00	Setpoint
9-07	Actual Value
9-15	PCD Write Configuration
9-16	PCD Read Configuration
9-18	Node Address
9-22	Telegram Selection
9-23	Parameters for Signals
9-27	Parameter Edit
9-28	Process Control
9-31	Safe Address
9-44	Fault Message Counter
9-45	Fault Code
9-47	Fault Number
9-52	Fault Situation Counter
9-53	Profibus Warning Word
9-63	Actual Baud Rate
9-64	Device Identification
9-65	Profile Number
9-67	Control Word 1
9-68	Status Word 1
9-70	Programming Set-up
9-71	Profibus Save Data Values
9-72	ProfibusDriveReset
9-75	DO Identification
9-80	Defined Parameters (1)
9-81	Defined Parameters (2)
9-82	Defined Parameters (3)
9-83	Defined Parameters (4)
9-84	Defined Parameters (5)
9-85	Defined Parameters (6)
9-90	Changed Parameters (1)
9-91	Changed Parameters (2)
9-92	Changed Parameters (3)
9-93	Changed Parameters (4)
9-94	Changed Parameters (5)
9-99	Profibus Revision Counter
10-**	**CAN Fieldbus**
10-0*	**Common Settings**
10-00	CAN Protocol
10-01	Baud Rate Select
10-02	MAC ID
10-05	Readout Transmit Error Counter
10-06	Readout Receive Error Counter
10-07	Readout Bus Off Counter
10-1*	**DeviceNet**
10-10	Process Data Type Selection
10-11	Process Data Config Write
10-12	Process Data Config Read
10-13	Warning Parameter
10-14	Net Reference
10-15	Net Control
10-2*	**COS Filters**
10-20	COS Filter 1
10-21	COS Filter 2
10-22	COS Filter 3
10-23	COS Filter 4
10-3*	**Parameter Access**
10-30	Array Index
10-31	Store Data Values
10-32	Devicenet Revision
10-33	Store Always
10-34	DeviceNet Product Code
10-39	Devicenet F Parameters
12-**	**Ethernet**
12-0*	**IP Settings**
12-00	IP Address Assignment
12-01	IP Address
12-02	Subnet Mask
12-03	Default Gateway
12-04	DHCP Server
12-05	Lease Expires
12-06	Name Servers
12-07	Domain Name
12-08	Host Name
12-09	Physical Address
12-1*	**Ethernet Link Parameters**
12-10	Link Status
12-11	Link Duration
12-12	Auto Negotiation
12-13	Link Speed
12-14	Link Duplex
12-18	Supervisor MAC
12-19	Supervisor IP Addr.
12-2*	**Process Data**
12-20	Control Instance
12-21	Process Data Config Write
12-22	Process Data Config Read
12-27	Primary Master
12-28	Store Data Values
12-29	Store Always
12-3*	**EtherNet/IP**
12-30	Warning Parameter
12-31	Net Reference
12-32	Net Control
12-33	CIP Revision
12-34	CIP Product Code
12-35	EDS Parameter
12-37	COS Inhibit Timer
12-38	COS Filter
12-4*	**Modbus TCP**
12-40	Status Parameter
12-41	Slave Message Count
12-42	Slave Exception Message Count
12-8*	**Other Ethernet Services**
12-80	FTP Server
12-81	HTTP Server
12-82	SMTP Service
12-83	SNMP Agent
12-84	Address Conflict Detection
12-85	ACD Last Conflict
12-89	Transparent Socket Channel Port
12-9*	**Advanced Ethernet Services**
12-90	Cable Diagnostic
12-91	MDI-X
12-92	IGMP Snooping
12-93	Cable Error Length
12-94	Broadcast Storm Protection
12-95	Inactivity timeout
12-96	Port Config
12-97	QoS Priority
12-98	Interface Counters
12-99	Media Counters
13-**	**Smart Logic**
13-0*	**SLC Settings**
13-00	SL Controller Mode
13-01	Start Event
13-02	Stop Event
13-03	Reset SLC
13-1*	**Comparators**
13-10	Comparator Operand
13-11	Comparator Operator
13-12	Comparator Value
13-1*	**RS Flip Flops**
13-15	RS-FF Operand S
13-16	RS-FF Operand R
13-2*	**Timers**
13-20	SL Controller Timer
13-4*	**Logic Rules**
13-40	Logic Rule Boolean 1
13-41	Logic Rule Operator 1
13-42	Logic Rule Boolean 2
13-43	Logic Rule Operator 2
13-44	Logic Rule Boolean 3
13-5*	**States**
13-51	SL Controller Event
13-52	SL Controller Action
13-9*	**User Defined Alerts**
13-90	Alert Trigger
13-91	Alert Action
13-92	Alert Text
13-9*	**User Defined Readouts**
13-97	Alert Alarm Word
13-98	Alert Warning Word
13-99	Alert Status Word
14-**	**Special Functions**
14-0*	**Inverter Switching**
14-00	Switching Pattern
14-01	Switching Frequency
14-03	Overmodulation
14-04	PWM Random
14-1*	**Mains On/Off**
14-10	Mains Failure
14-11	Mains Voltage at Mains Fault
14-12	Function at Mains Imbalance
14-16	Kin. Backup Gain
14-2*	**Reset Functions**
14-20	Reset Mode
14-21	Automatic Restart Time
14-22	Operation Mode
14-23	Typecode Setting
14-25	Trip Delay at Torque Limit
14-26	Trip Delay at Inverter Fault
14-28	Production Settings
14-29	Service Code
14-3*	**Current Limit Ctrl.**
14-30	Current Lim Ctrl, Proportional Gain
14-31	Current Lim Ctrl, Integration Time
14-32	Current Lim Ctrl, Filter Time
14-4*	**Energy Optimising**
14-40	VT Level
14-41	AEO Minimum Magnetisation
14-42	Minimum AEO Frequency
14-43	Motor Cosphi
14-5*	**Environment**
14-50	RFI Filter
14-51	DC Link Compensation
14-52	Fan Control
14-53	Fan Monitor
14-55	Output Filter
14-56	Capacitance Output Filter
14-57	Inductance Output Filter
14-58	Voltage Gain Filter
14-59	Actual Number of Inverter Units
14-6*	**Auto Derate**
14-60	Function at Over Temperature
14-61	Function at Inverter Overload
14-62	Inv. Overload Derate Current
14-8*	**Options**
14-80	Option Supplied by External 24VDC
14-9*	**Fault Settings**
14-90	Fault Level

15- Drive Information**
15-0* Operating Data
15-00 Operating hours
15-01 Running Hours
15-02 kWh Counter
15-03 Power Up's
15-04 Over Temp's
15-05 Over Volt's
15-06 Reset kWh Counter
15-07 Reset Running Hours Counter
15-08 Number of Starts
15-1* Data Log Settings
15-10 Logging Source
15-11 Logging Interval
15-12 Trigger Event
15-13 Logging Mode
15-14 Samples Before Trigger
15-2* Historic Log
15-20 Historic Log: Event
15-21 Historic Log: Value
15-22 Historic Log: Time
15-23 Historic log: Date and Time
15-3* Alarm Log
15-30 Alarm Log: Error Code
15-31 Alarm Log: Value
15-32 Alarm Log: Time
15-33 Alarm Log: Date and Time
15-34 Alarm Log: Setpoint
15-35 Alarm Log: Feedback
15-36 Alarm Log: Current Demand
15-37 Alarm Log: Process Ctrl Unit
15-4* Drive Identification
15-40 FC Type
15-41 Power Section
15-42 Voltage
15-43 Software Version
15-44 Ordered Typecode String
15-45 Actual Typecode String
15-46 Frequency Converter Ordering No
15-47 Power Card Ordering No
15-48 LCP Id No
15-49 SW ID Control Card
15-50 SW ID Power Card
15-51 Frequency Converter Serial Number
15-53 Power Card Serial Number
15-54 Config File Name
15-58 SmartStart Filename
15-59 Filename
15-6* Option Ident
15-60 Option Mounted
15-61 Option SW Version
15-62 Option Ordering No
15-63 Option Serial No
15-70 Option in Slot A
15-71 Slot A Option SW Version
15-72 Option in Slot B
15-73 Slot B Option SW Version
15-74 Option in Slot C0/E0
15-75 Slot C0/E0 Option SW Version
15-76 Option in Slot C1/E1
15-77 Slot C1/E1 Option SW Version
15-8* Operating Data II
15-80 Fan Running Hours
15-81 Preset Fan Running Hours
15-9* Parameter Info
15-92 Defined Parameters
15-93 Modified Parameters
15-98 Drive Identification
15-99 Parameter Metadata
16- Data Readouts**
16-0* General Status
16-00 Control Word
16-01 Reference [Unit]
16-02 Reference [%]
16-03 Status Word
16-05 Main Actual Value [%]
16-09 Custom Readout
16-1* Motor Status
16-10 Power [kW]
16-11 Power [hp]
16-12 Motor Voltage
16-13 Frequency
16-14 Motor current
16-15 Frequency [%]
16-16 Torque [Nm]
16-17 Speed [RPM]
16-18 Motor Thermal
16-20 Motor Angle
16-22 Torque [%]
16-23 Motor Shaft Power [kW]
16-24 Calibrated Stator Resistance
16-26 Power Filtered [kW]
16-27 Power Filtered [hp]
16-3* Drive Status
16-30 DC Link Voltage
16-31 System Temp.
16-32 Brake Energy /s
16-33 Brake Energy Average
16-34 Heatsink Temp.
16-35 Inverter Thermal
16-36 Inv. Nom. Current
16-37 Inv. Max. Current
16-38 SL Controller State
16-39 Control Card Temp.
16-40 Logging Buffer Full
16-49 Current Fault Source
16-5* Ref. & Feedb.
16-50 External Reference
16-52 Feedback[Unit]
16-53 Digi Pot Reference
16-54 Feedback 1 [Unit]
16-55 Feedback 2 [Unit]
16-56 Feedback 3 [Unit]
16-58 PID Output [%]
16-59 Adjusted Setpoint
16-6* Inputs & Outputs
16-60 Digital Input
16-61 Terminal 53 Switch Setting
16-62 Analog Input 53
16-63 Terminal 54 Switch Setting
16-64 Analog Input 54
16-65 Analog Output 42 [mA]
16-66 Digital Output [bin]
16-67 Pulse Input #29 [Hz]
16-68 Pulse Input #33 [Hz]
16-69 Pulse Output #27 [Hz]
16-70 Pulse Output #29 [Hz]
16-71 Relay Output [bin]
16-72 Counter A
16-73 Counter B
16-75 Analog In X30/11
16-76 Analog In X30/12
16-77 Analog Out X30/8 [mA]
16-78 Analog Out X45/1 [mA]
16-79 Analog Out X45/3 [mA]
16-8* Fieldbus & FC Port
16-80 Fieldbus CTW 1
16-82 Fieldbus REF 1
16-84 Comm. Option STW
16-85 FC Port CTW 1
16-86 FC Port REF 1
16-89 Configurable Alarm/Warning Word
16-9* Diagnosis Readouts
16-90 Alarm Word
16-91 Alarm Word 2
16-92 Warning Word
16-93 Warning Word 2
16-94 Ext. Status Word
16-95 Ext. Status Word 2
16-96 Maintenance Word
18- Info & Readouts**
18-0* Maintenance Log
18-00 Maintenance Log: Item
18-01 Maintenance Log: Action
18-02 Maintenance Log: Time
18-03 Maintenance Log: Date and Time
18-3* Analog Readouts
18-30 Analog Input X42/1
18-31 Analog Input X42/3
18-32 Analog Input X42/5
18-33 Analog Out X42/7 [V]
18-34 Analog Out X42/9 [V]
18-35 Analog Out X42/11 [V]
18-36 Analog Input X48/2 [mA]
18-37 Temp. Input X48/4
18-38 Temp. Input X48/7
18-39 Temp. Input X48/10
18-5* Ref. & Feedb.
18-50 Sensorless Readout [unit]
18-6* Inputs & Outputs 2
18-60 Digital Input 2
18-7* Rectifier Status
18-70 Mains Voltage
18-71 Mains Frequency
18-72 Mains Imbalance
18-75 Rectifier DC Volt.
20- Drive Closed Loop**
20-0* Feedback
20-00 Feedback 1 Source
20-01 Feedback 1 Conversion
20-02 Feedback 1 Source Unit
20-03 Feedback 2 Source
20-04 Feedback 2 Conversion
20-05 Feedback 2 Source Unit
20-06 Feedback 3 Source
20-07 Feedback 3 Conversion
20-08 Feedback 3 Source Unit
20-12 Reference/Feedback Unit
20-2* Feedback/Setpoint
20-20 Feedback Function
20-21 Setpoint 1
20-22 Setpoint 2
20-23 Setpoint 3
20-6* Sensorless
20-60 Sensorless Unit
20-69 Sensorless Information
20-7* PID Autotuning
20-70 Closed Loop Type
20-71 PID Performance
20-72 PID Output Change
20-73 Minimum Feedback Level
20-74 Maximum Feedback Level
20-79 PID Autotuning
20-8* PID Basic Settings
20-81 PID Normal/ Inverse Control
20-82 PID Start Speed [RPM]
20-83 PID Start Speed [Hz]
20-84 On Reference Bandwidth
20-9* PID Controller
20-91 PID Anti Windup
20-93 PID Proportional Gain
20-94 PID Integral Time
20-95 PID Differentiation Time
20-96 PID Diff. Gain Limit
21- Ext. Closed Loop**
21-0* Ext. CL Autotuning
21-00 Closed Loop Type
21-01 PID Performance
21-02 PID Output Change
21-03 Minimum Feedback Level
21-04 Maximum Feedback Level
21-09 PID Auto Tuning
21-1* Ext. CL 1 Ref./Fb.
21-10 Ext. 1 Ref./Feedback Unit
21-11 Ext. 1 Minimum Reference
21-12 Ext. 1 Maximum Reference
21-13 Ext. 1 Reference Source
21-14 Ext. 1 Feedback Source
21-15 Ext. 1 Setpoint
21-17 Ext. 1 Reference [Unit]
21-18 Ext. 1 Feedback [Unit]
21-19 Ext. 1 Output [%]
21-2* Ext. CL 1 PID
21-20 Ext. 1 Normal/Inverse Control
21-21 Ext. 1 Proportional Gain
21-22 Ext. 1 Integral Time
21-23 Ext. 1 Differentation Time
21-24 Ext. 1 Dif. Gain Limit
21-3* Ext. CL 2 Ref./Fb.
21-30 Ext. 2 Ref./Feedback Unit
21-31 Ext. 2 Minimum Reference
21-32 Ext. 2 Maximum Reference
21-33 Ext. 2 Reference Source
21-34 Ext. 2 Feedback Source
21-35 Ext. 2 Setpoint
21-37 Ext. 2 Reference [Unit]
21-38 Ext. 2 Feedback [Unit]
21-39 Ext. 2 Output [%]
21-4* Ext. CL 2 PID
21-40 Ext. 2 Normal/Inverse Control
21-41 Ext. 2 Proportional Gain
21-42 Ext. 2 Integral Time
21-43 Ext. 2 Differentation Time
21-44 Ext. 2 Dif. Gain Limit
21-5* Ext. CL 3 Ref./Fb.
21-50 Ext. 3 Ref./Feedback Unit
21-51 Ext. 3 Minimum Reference
21-52 Ext. 3 Maximum Reference
21-53 Ext. 3 Reference Source
21-54 Ext. 3 Feedback Source
21-55 Ext. 3 Setpoint
21-57 Ext. 3 Reference [Unit]
21-58 Ext. 3 Feedback [Unit]
21-59 Ext. 3 Output [%]
21-6* Ext. CL 3 PID
21-60 Ext. 3 Normal/Inverse Control
21-61 Ext. 3 Proportional Gain
21-62 Ext. 3 Integral Time
21-63 Ext. 3 Differentation Time
21-64 Ext. 3 Dif. Gain Limit
22- Appl. Functions**
22-0* Miscellaneous
22-00 External Interlock Delay
22-01 Power Filter Time
22-2* No-Flow Detection
22-20 Low Power Auto Set-up
22-21 Low Power Detection
22-22 Low Speed Detection
22-23 No-Flow Function
22-24 No-Flow Delay
22-26 Dry Pump Function
22-27 Dry Pump Delay
22-28 No-Flow Low Speed [RPM]
22-29 No-Flow Low Speed [Hz]
22-3* No-Flow Power Tuning
22-30 No-Flow Power
22-31 Power Correction Factor
22-32 Low Speed [RPM]
22-33 Low Speed [Hz]
22-34 Low Speed Power [kW]
22-35 Low Speed Power [HP]
22-36 High Speed [RPM]
22-37 High Speed [Hz]
22-38 High Speed Power [kW]
22-39 High Speed Power [HP]

10

22-4*	**Sleep Mode**
22-40	Minimum Run Time
22-41	Minimum Sleep Time
22-42	Wake-up Speed [RPM]
22-43	Wake-up Speed [Hz]
22-44	Wake-up Ref./FB Difference
22-45	Setpoint Boost
22-46	Maximum Boost Time
22-5*	**End of Curve**
22-50	End of Curve Function
22-51	End of Curve Delay
22-6*	**Broken Belt Detection**
22-60	Broken Belt Function
22-61	Broken Belt Torque
22-62	Broken Belt Delay
22-7*	**Short Cycle Protection**
22-75	Short Cycle Protection
22-76	Interval between Starts
22-77	Minimum Run Time
22-78	Minimum Run Time Override
22-79	Minimum Run Time Override Value
22-8*	**Flow Compensation**
22-80	Flow Compensation
22-81	Square-linear Curve Approximation
22-82	Work Point Calculation
22-83	Speed at No-Flow [RPM]
22-84	Speed at No-Flow [Hz]
22-85	Speed at Design Point [RPM]
22-86	Speed at Design Point [Hz]
22-87	Pressure at No-Flow Speed
22-88	Pressure at Rated Speed
22-89	Flow at Design Point
22-90	Flow at Rated Speed
23-**	**Time-based Functions**
23-0*	**Timed Actions**
23-00	ON Time
23-01	ON Action
23-02	OFF Time
23-03	OFF Action
23-04	Occurrence
23-1*	**Maintenance**
23-10	Maintenance Item
23-11	Maintenance Action
23-12	Maintenance Time Base
23-13	Maintenance Time Interval
23-14	Maintenance Date and Time
23-1*	**Maintenance Reset**
23-15	Reset Maintenance Word
23-16	Maintenance Text
23-5*	**Energy Log**
23-50	Energy Log Resolution
23-51	Period Start
23-53	Energy Log
23-54	Reset Energy Log
23-6*	**Trending**
23-60	Trend Variable
23-61	Continuous Bin Data
23-62	Timed Bin Data
23-63	Timed Period Start
23-64	Timed Period Stop
23-65	Minimum Bin Value
23-66	Reset Continuous Bin Data
23-67	Reset Timed Bin Data
23-8*	**Payback Counter**
23-80	Power Reference Factor
23-81	Energy Cost
23-82	Investment
23-83	Energy Savings
23-84	Cost Savings
24-**	**Appl. Functions 2**
24-1*	**Drive Bypass**
24-10	Drive Bypass Function
24-11	Drive Bypass Delay Time
25-**	**Cascade Controller**
25-0*	**System Settings**
25-00	Cascade Controller
25-02	Motor Start
25-04	Pump Cycling
25-05	Fixed Lead Pump
25-06	Number of Pumps
25-2*	**Bandwidth Settings**
25-20	Staging Bandwidth
25-21	Override Bandwidth
25-22	Fixed Speed Bandwidth
25-23	SBW Staging Delay
25-24	SBW Destaging Delay
25-25	OBW Time
25-26	Destage At No-Flow
25-27	Stage Function
25-28	Stage Function Time
25-29	Destage Function
25-30	Destage Function Time
25-4*	**Staging Settings**
25-40	Ramp Down Delay
25-41	Ramp Up Delay
25-42	Staging Threshold
25-43	Destaging Threshold
25-44	Staging Speed [RPM]
25-45	Staging Speed [Hz]
25-46	Destaging Speed [RPM]
25-47	Destaging Speed [Hz]
25-49	Staging Principle
25-5*	**Alternation Settings**
25-50	Lead Pump Alternation
25-51	Alternation Event
25-52	Alternation Time Interval
25-53	Alternation Timer Value
25-54	Alternation Predefined Time
25-55	Alternate if Load < 50%
25-56	Staging Mode at Alternation
25-58	Run Next Pump Delay
25-59	Run on Mains Delay
25-8*	**Status**
25-80	Cascade Status
25-81	Pump Status
25-82	Lead Pump
25-83	Relay Status
25-84	Pump ON Time
25-85	Relay ON Time
25-86	Reset Relay Counters
25-9*	**Service**
25-90	Pump Interlock
25-91	Manual Alternation
26-**	**Analog I/O Option**
26-0*	**Analog I/O Mode**
26-00	Terminal X42/1 Mode
26-01	Terminal X42/3 Mode
26-02	Terminal X42/5 Mode
26-1*	**Analog Input X42/1**
26-10	Terminal X42/1 Low Voltage
26-11	Terminal X42/1 High Voltage
26-14	Term. X42/1 Low Ref./Feedb. Value
26-15	Term. X42/1 High Ref./Feedb. Value
26-16	Term. X42/1 Filter Time Constant
26-17	Term. X42/1 Live Zero
26-2*	**Analog Input X42/3**
26-20	Terminal X42/3 Low Voltage
26-21	Terminal X42/3 High Voltage
26-24	Term. X42/3 Low Ref./Feedb. Value
26-25	Term. X42/3 High Ref./Feedb. Value
26-26	Term. X42/3 Filter Time Constant
26-27	Term. X42/3 Live Zero
26-3*	**Analog Input X42/5**
26-30	Terminal X42/5 Low Voltage
26-31	Terminal X42/5 High Voltage
26-34	Term. X42/5 Low Ref./Feedb. Value
26-35	Term. X42/5 High Ref./Feedb. Value
26-36	Term. X42/5 Filter Time Constant
26-37	Term. X42/5 Live Zero
26-4*	**Analog Out X42/7**
26-40	Terminal X42/7 Output
26-41	Terminal X42/7 Min. Scale
26-42	Terminal X42/7 Max. Scale
26-43	Terminal X42/7 Bus Control
26-44	Terminal X42/7 Timeout Preset
26-5*	**Analog Out X42/9**
26-50	Terminal X42/9 Output
26-51	Terminal X42/9 Min. Scale
26-52	Terminal X42/9 Max. Scale
26-53	Terminal X42/9 Bus Control
26-54	Terminal X42/9 Timeout Preset
26-6*	**Analog Out X42/11**
26-60	Terminal X42/11 Output
26-61	Terminal X42/11 Min. Scale
26-62	Terminal X42/11 Max. Scale
26-63	Terminal X42/11 Bus Control
26-64	Terminal X42/11 Timeout Preset
27-**	**Cascade CTL Option**
27-0*	**Control & Status**
27-01	Pump Status
27-02	Manual Pump Control
27-03	Current Runtime Hours
27-04	Pump Total Lifetime Hours
27-1*	**Configuration**
27-10	Cascade Controller
27-11	Number Of Drives
27-12	Number Of Pumps
27-14	Pump Capacity
27-16	Runtime Balancing
27-17	Motor Starters
27-18	Spin Time for Unused Pumps
27-19	Reset Current Runtime Hours
27-2*	**Bandwidth Settings**
27-20	Normal Operating Range
27-21	Override Limit
27-22	Fixed Speed Only Operating Range
27-23	Staging Delay
27-24	Destaging Delay
27-25	Override Hold Time
27-27	Min Speed Destage Delay
27-3*	**Staging Speed**
27-30	Auto Tune Staging Speeds
27-31	Stage On Speed [RPM]
27-32	Stage On Speed [Hz]
27-33	Stage Off Speed [RPM]
27-34	Stage Off Speed [Hz]
27-4*	**Staging Settings**
27-40	Auto Tune Staging Settings
27-41	Ramp Down Delay
27-42	Ramp Up Delay
27-43	Staging Threshold
27-44	Destaging Threshold
27-45	Staging Speed [RPM]
27-46	Staging Speed [Hz]
27-47	Destaging Speed [RPM]
27-48	Destaging Speed [Hz]
27-49	Staging Principle
27-5*	**Alternate Settings**
27-50	Automatic Alternation
27-51	Alternation Event
27-52	Alternation Time Interval
27-53	Alternation Timer Value
27-54	Alternation At Time of Day
27-55	Alternation Predefined Time
27-56	Alternate Capacity is <
27-58	Run Next Pump Delay
27-6*	**Digital Inputs**
27-60	Terminal X66/1 Digital Input
27-61	Terminal X66/3 Digital Input
27-62	Terminal X66/5 Digital Input
27-63	Terminal X66/7 Digital Input
27-64	Terminal X66/9 Digital Input
27-65	Terminal X66/11 Digital Input
27-66	Terminal X66/13 Digital Input
27-7*	**Connections**
27-70	Relay
27-9*	**Readouts**
27-91	Cascade Reference
27-92	% Of Total Capacity
27-93	Cascade Option Status
27-94	Cascade System Status
27-95	Advanced Cascade Relay Output [bin]
27-96	Extended Cascade Relay Output [bin]
29-**	**Water Application Functions**
29-0*	**Pipe Fill**
29-00	Pipe Fill Enable
29-01	Pipe Fill Speed [RPM]
29-02	Pipe Fill Speed [Hz]
29-03	Pipe Fill Time
29-04	Pipe Fill Rate
29-05	Filled Setpoint
29-06	No-Flow Disable Timer
29-07	Filled setpoint delay
29-1*	**Deragging Function**
29-10	Derag Cycles
29-11	Derag at Start/Stop
29-12	Deragging Run Time
29-13	Derag Speed [RPM]
29-14	Derag Speed [Hz]
29-15	Derag Off Delay
29-2*	**Derag Power Tuning**
29-20	Derag Power[kW]
29-21	Derag Power[HP]
29-22	Derag Power Factor
29-23	Derag Power Delay
29-24	Low Speed [RPM]
29-25	Low Speed [Hz]
29-26	Low Speed Power [kW]
29-27	Low Speed Power [HP]
29-28	High Speed [RPM]
29-29	High Speed [Hz]
29-30	High Speed Power [kW]
29-31	High Speed Power [HP]
29-32	Derag On Ref Bandwidth
29-33	Power Derag Limit
29-34	Consecutive Derag Interval
29-35	Derag at Locked Rotor
29-4*	**Pre/Post Lube**
29-40	Pre/Post Lube Function
29-41	Pre Lube Time
29-42	Post Lube Time
29-5*	**Flow Confirmation**
29-50	Validation Time
29-51	Verification Time
29-52	Signal Lost Verification Time
29-53	Flow Confirmation Mode
29-6*	**Flow Meter**
29-60	Flow Meter Monitor
29-61	Flow Meter Source
29-62	Flow Meter Unit
29-63	Totalized Volume Unit
29-64	Actual Volume Unit
29-65	Totalized Volume
29-66	Actual Volume
29-67	Reset Totalized Volume
29-68	Reset Actual Volume
29-69	Flow
30-**	**Special Features**
30-2*	**Adv. Start Adjust**
30-22	Locked Rotor Detection
30-23	Locked Rotor Detection Time [s]
30-5*	**Unit Configuration**
30-50	Heat Sink Fan Mode
30-8*	**Compatibility (I)**
30-81	Brake Resistor (ohm)

31-**	**Bypass Option**
31-00	Bypass Mode
31-01	Bypass Start Time Delay
31-02	Bypass Trip Time Delay
31-03	Test Mode Activation
31-10	Bypass Status Word
31-11	Bypass Running Hours
31-19	Remote Bypass Activation
35-**	**Sensor Input Option**
35-0*	**Temp. Input Mode**
35-00	Term. X48/4 Temperature Unit
35-01	Term. X48/4 Input Type
35-02	Term. X48/7 Temperature Unit
35-03	Term. X48/7 Input Type
35-04	Term. X48/10 Temperature Unit
35-05	Term. X48/10 Input Type
35-06	Temperature Sensor Alarm Function
35-1*	**Temp. Input X48/4**
35-14	Term. X48/4 Filter Time Constant
35-15	Term. X48/4 Temp. Monitor
35-16	Term. X48/4 Low Temp. Limit
35-17	Term. X48/4 High Temp. Limit
35-2*	**Temp. Input X48/7**
35-24	Term. X48/7 Filter Time Constant
35-25	Term. X48/7 Temp. Monitor
35-26	Term. X48/7 Low Temp. Limit
35-27	Term. X48/7 High Temp. Limit
35-3*	**Temp. Input X48/10**
35-34	Term. X48/10 Filter Time Constant
35-35	Term. X48/10 Temp. Monitor
35-36	Term. X48/10 Low Temp. Limit
35-37	Term. X48/10 High Temp. Limit
35-4*	**Analog Input X48/2**
35-42	Term. X48/2 Low Current
35-43	Term. X48/2 High Current
35-44	Term. X48/2 Low Ref./Feedb. Value
35-45	Term. X48/2 High Ref./Feedb. Value
35-46	Term. X48/2 Filter Time Constant
35-47	Term. X48/2 Live Zero
43-**	**Unit Readouts**
43-0*	**Component Status**
43-00	Component Temp.
43-01	Auxiliary Temp.
43-1*	**Power Card Status**
43-10	HS Temp. ph.U
43-11	HS Temp. ph.V
43-12	HS Temp. ph.W
43-13	PC Fan A Speed
43-14	PC Fan B Speed
43-15	PC Fan C Speed
43-2*	**Fan Pow.Card Status**
43-20	FPC Fan A Speed
43-21	FPC Fan B Speed
43-22	FPC Fan C Speed
43-23	FPC Fan D Speed
43-24	FPC Fan E Speed
43-25	FPC Fan F Speed

Index

Q

R

S

T

U

V

W

Danfoss A/S
Ulsnaes 1
DK-6300 Graasten
vlt-drives.danfoss.com

130R0708 MG22A202 04/2018