ENGINEERING
TOMORROW

Operating Guide

VLT® HVAC Basic Drive FC 101

drives.danfoss.com | VLT®

ENGINEERING
TOMORROW

Danfoss A/S
6430 Nordborg
Denmark
CVR nr.: 20 16 57 15

Telephone: +45 7488 2222
Fax: +45 7449 0949

EU DECLARATION OF CONFORMITY

Danfoss A/S

Danfoss Drives A/S

declares under our sole responsibility that the

Product category: Frequency Converter

Type designation(s): FC-101PXXXYY**********

Character XXX: K25, K37, K75, 1K5, 2K2, 3K0, 3K7, 4K0, 5K5, 7K5, 11K, 15K, 18K, 22K, 30K, 37K, 45K, 55K, 75K, 90K
Character YY: T2, T4, T6
* may be any number or letter indicating drive options which do not impact this DoC.
The meaning of the 39 characters in the type code string can be found in appendix 00729776.

Covered by this declaration is in conformity with the following directive(s), standard(s) or other normative document(s), provided that the product is used in accordance with our instructions.

Low Voltage Directive 2014/35/EU

EN61800-5-1:2007 + A1:2017	Adjustable speed electrical power drive systems – Part 5-1: Safety requirements – Electrical, thermal and energy.

EMC Directive 2014/30/EU

EN61800-3:2004 + A1:2012	Adjustable speed electrical power drive systems – Part 3: EMC requirements and specific test methods.

RoHS Directive 2011/65/EU including amendment 2015/863.

EN630000:2018	Technical documentation for the assessment of electrical and electronic products with respect to the restriction of hazardous substances

Date: 2020.09.15 Place of issue:	Issued by	Date: 2020.09.15 Place of issue:	Approved by
Graasten, DK	**Signature:** **Name: Gert Kjær** **Title: Senior Director, GDE**	Graasten, DK	**Signature:** **Name: Michael Termansen** **Title: VP, PD Center Denmark**

Danfoss only vouches for the correctness of the English version of this declaration. In the event of the declaration being translated into any other language, the translator concerned shall be liable for the correctness of the translation

Contents

1 Introduction

1.1 Purpose of this Operating Guide

This operating guide provides information for safe installation and commissioning of the AC drive. It is intended for use by qualified personnel. Read and follow the instructions to use the drive safely and professionally. Pay particular attention to the safety instructions and general warnings. Always keep this operating guide available with the drive.

1.2 Trademarks

VLT® is a registered trademark for Danfoss A/S.

1.3 Additional Resources

1.3.1 Other Resources

Other resources are available to understand advanced drive functions and programming.

- The VLT® HVAC Basic Drive FC 101 Programming Guide provides information on how to program and includes complete parameter descriptions.
- The VLT® HVAC Basic Drive FC 101 Design Guide provides all technical information about the drive. It also lists options and accessories.

The technical documentation is available in electronic form online at www.danfoss.com.

1.3.2 MCT 10 Setup Software Support

Download the software from the service and support section on www.danfoss.com.

During the installation process of the software, enter access code 81463800 to activate the VLT® HVAC Basic Drive FC 101 functionality. A license key is not required for using the VLT® HVAC Basic Drive FC 101 functionality.

The latest software does not always contain the latest updates for drives. Contact the local sales office for the latest drive updates (in the form of *.upd files), or download the drive updates from the service and support section on www.danfoss.com.

1.4 Document and Software Version

The operating guide is regularly reviewed and updated. All suggestions for improvement are welcome.

The original language of this manual is English.

Table 1: Document and Software Version

Edition	Remarks	Software version
AQ275641848264en-000101	Update to new software version.	4.4x

From software version 4.0x and later (production week 33 2017 and after), the variable speed heat sink cooling fan function is implemented in the drive for power sizes 22 kW (30 hp) 400 V IP20 and below, 18.5 kW (25 hp) 400 V IP54 and below, and 11 kW (15 hp) 200 V IP20 and below. This function requires software and hardware updates and introduces restrictions with regards to backwards compatibility for H1–H5 and I2–I4 enclosure sizes. Refer to the following table for the limitations.

Table 2: Software and Hardware Compatibility

Software compatibility	**Old control card (production week 33 2017 or before)**	**New control card (production week 34 2017 or after)**
Old software (OSS-file version 3.xx and below)	Yes	No
New software (OSS-file version 4.xx or higher)	No	Yes
Hardware compatibility	**Old control card (production week 33 2017 or before)**	**New control card (production week 34 2017 or after)**
Old power card (production week 33 2017 or before)	Yes (only software version 3.xx or below)	Yes (MUST update software to version 4.xx or higher)
New power card (production week 34 2017 or after)	Yes (MUST update software to version 3.xx or below, the fan continuously runs at full speed)	Yes (only software version 4.xx or higher)

1.5 Certificates and Approvals

Table 3: Certificates and Approvals

Certification		**IP20**	**IP54**
EC Declaration of Conformity	CE	✓	✓
UL Listed	c UL us	✓	–
RCM		✓	✓
EAC	EAC	✓	✓
UkrSEPRO	089	✓	✓

The drive complies with UL 508C thermal memory retention requirements. For more information, refer to the section *Motor Thermal Protection* in the product-specific design guide.

1.6 Disposal

	Do not dispose of equipment containing electrical components together with domestic waste. Collect it separately in accordance with local and currently valid legislation.

2 Safety

2.1 Safety Symbols

The following symbols are used in this manual:

⚠ DANGER ⚠

Indicates a hazardous situation which, if not avoided, will result in death or serious injury.

⚠ WARNING ⚠

Indicates a hazardous situation which, if not avoided, could result in death or serious injury.

⚠ CAUTION ⚠

Indicates a hazardous situation which, if not avoided, could result in minor or moderate injury.

NOTICE

Indicates information considered important, but not hazard-related (for example, messages relating to property damage).

2.2 Qualified Personnel

To allow trouble-free and safe operation of the unit, only qualified personnel with proven skills are allowed to transport, store, assemble, install, program, commission, maintain, and decommission this equipment.

Persons with proven skills:

- Are qualified electrical engineers, or persons who have received training from qualified electrical engineers and are suitably experienced to operate devices, systems, plant, and machinery in accordance with pertinent laws and regulations.
- Are familiar with the basic regulations concerning health and safety/accident prevention.
- Have read and understood the safety guidelines given in all manuals provided with the unit, especially the instructions given in the Operating Guide.
- Have good knowledge of the generic and specialist standards applicable to the specific application.

2.3 Safety Precautions

⚠ WARNING ⚠

HIGH VOLTAGE

AC drives contain high voltage when connected to AC mains input, DC supply, or load sharing. Failure to perform installation, start-up, and maintenance by qualified personnel can result in death or serious injury.

- Only qualified personnel must perform installation, start-up, and maintenance.

⚠ WARNING ⚠

UNINTENDED START

When the drive is connected to AC mains, DC supply, or load sharing, the motor may start at any time. Unintended start during programming, service, or repair work can result in death, serious injury, or property damage. Start the motor with an external switch, a fieldbus command, an input reference signal from the local control panel (LCP), via remote operation using MCT 10 software, or after a cleared fault condition.

- Disconnect the drive from the mains.
- Press [Off/Reset] on the LCP before programming parameters.
- Ensure that the drive is fully wired and assembled when it is connected to AC mains, DC supply, or load sharing.

⚠ WARNING ⚠

DISCHARGE TIME

The drive contains DC-link capacitors, which can remain charged even when the drive is not powered. High voltage can be present even when the warning indicator lights are off.

Failure to wait the specified time after power has been removed before performing service or repair work could result in death or serious injury.

- Stop the motor.
- Disconnect AC mains, permanent magnet type motors, and remote DC-link supplies, including battery back-ups, UPS, and DC-link connections to other drives.
- Wait for the capacitors to discharge fully. The minimum waiting time is specified in the table *Discharge time* and is also visible on the nameplate on top of the drive.
- Before performing any service or repair work, use an appropriate voltage measuring device to make sure that the capacitors are fully discharged.

Table 4: Discharge Time

Voltage [V]	Power range [kW (hp)]	Minimum waiting time (minutes)
3x200	0.25–3.7 (0.33–5)	4
3x200	5.5–11 (7–15)	15
3x400	0.37–7.5 (0.5–10)	4
3x400	11–90 (15–125)	15
3x600	2.2–7.5 (3–10)	4
3x600	11–90 (15–125)	15

⚠ WARNING ⚠

LEAKAGE CURRENT HAZARD

Leakage currents exceed 3.5 mA. Failure to ground the drive properly can result in death or serious injury.

- Ensure the correct grounding of the equipment by a certified electrical installer.

⚠ WARNING ⚠

EQUIPMENT HAZARD

Contact with rotating shafts and electrical equipment can result in death or serious injury.

- Ensure that only trained and qualified personnel perform installation, start-up, and maintenance.
- Ensure that electrical work conforms to national and local electrical codes.
- Follow the procedures in this manual.

⚠ CAUTION ⚠

INTERNAL FAILURE HAZARD

An internal failure in the drive can result in serious injury when the drive is not properly closed.

- Ensure that all safety covers are in place and securely fastened before applying power.

2.4 Motor Thermal Protection

Procedure

1. Set *parameter 1-90 Motor Thermal Protection* to *[4] ETR trip 1* to enable the motor thermal protection function.

3 Installation

3.1 Mechanical Installation

3.1.1 Side-by-side Installation

The drive can be mounted side-by-side but requires the clearance above and below for cooling.

Table 5: Clearance Required for Cooling

		Power [kW (hp)]			Clearance above/below [mm (in)]
Size	**IP class**	**3x200–240 V**	**3x380–480 V**	**3x525–600 V**	
H1	IP20	0.25–1.5 (0.33–2)	0.37–1.5 (0.5–2)	–	100 (4)
H2	IP20	2.2 (3)	2.2–4 (3–5)	–	100 (4)
H3	IP20	3.7 (5)	5.5–7.5 (7.5–10)	–	100 (4)
H4	IP20	5.5–7.5 (7.5–10)	11–15 (15–20)	–	100 (4)
H5	IP20	11 (15)	18.5–22 (25–30)	–	100 (4)
H6	IP20	15–18.5 (20–25)	30–45 (40–60)	18.5–30 (25–40)	200 (7.9)
H7	IP20	22–30 (30–40)	55–75 (70–100)	37–55 (50–70)	200 (7.9)
H8	IP20	37–45 (50–60)	90 (125)	75–90 (100–125)	225 (8.9)
H9	IP20	–	–	2.2–7.5 (3–10)	100 (4)
H10	IP20	–	–	11–15 (15–20)	200 (7.9)
I2	IP54	–	0.75–4.0 (1–5)	–	100 (4)
I3	IP54	–	5.5–7.5 (7.5–10)	–	100 (4)
I4	IP54	–	11–18.5 (15–25)	–	100 (4)
I6	IP54	–	22–37 (30–50)	–	200 (7.9)
I7	IP54	–	45–55 (60–70)	–	200 (7.9)
I8	IP54	–	75–90 (100–125)	–	225 (8.9)

NOTICE

With IP21/NEMA Type1 option kit mounted, a distance of 50 mm (2 in) between the units is required.

3.1.2 Drive Dimensions

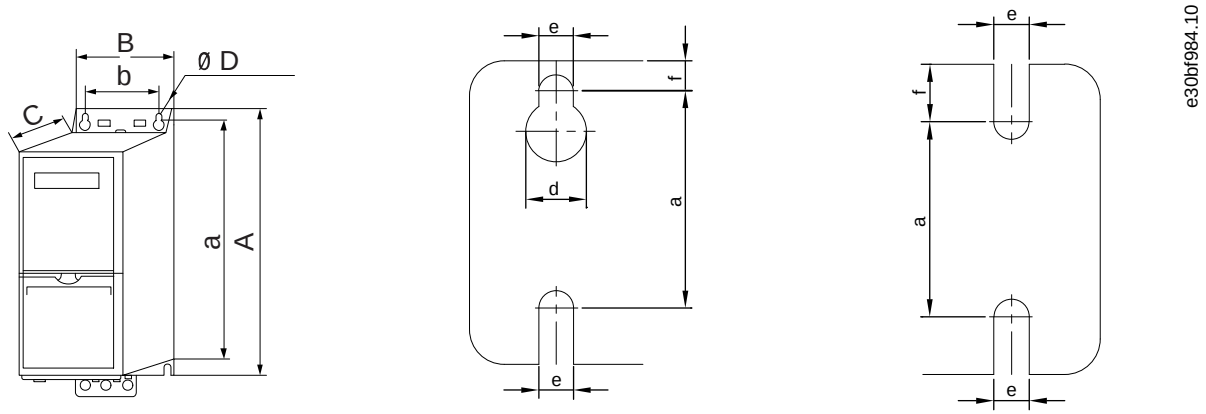

Illustration 1: Dimensions

Table 6: Dimensions, Enclosure Sizes H1–H5

Enclosure Size		H1	H2	H3	H4	H5
IP class		IP20	IP20	IP20	IP20	IP20
Power [kW (hp)]	**3x200–240 V**	0.25–1.5 (0.33–2.0)	2.2 (3.0)	3.7 (5.0)	5.5–7.5 (7.5–10)	11 (15)
	3x380–480 V	0.37–1.5 (0.5–2.0)	2.2–4.0 (3.0–5.0)	5.5–7.5 (7.5–10)	11–15 (15–20)	18.5–22 (25–30)
	3x525–600 V	–	–	–	–	–
Height [mm (in)]	**A**	195 (7.7)	227 (8.9)	255 (10.0)	296 (11.7)	334 (13.1)
	A [(1)]	273 (10.7)	303 (11.9)	329 (13.0)	359 (14.1)	402 (15.8)
	a	183 (7.2)	212 (8.3)	240 (9.4)	275 (10.8)	314 (12.4)
Width [mm (in)]	**B**	75 (3.0)	90 (3.5)	100 (3.9)	135 (5.3)	150 (5.9)
	b	56 (2.2)	65 (2.6)	74 (2.9)	105 (4.1)	120 (4.7)
Depth [mm (in)]	**C**	168 (6.6)	190 (7.5)	206 (8.1)	241 (9.5)	255 (10)
Mounting hole [mm (in)]	**d**	9 (0.35)	11 (0.43)	11 (0.43)	12.6 (0.50)	12.6 (0.50)
	e	4.5 (0.18)	5.5 (0.22)	5.5 (0.22)	7 (0.28)	7 (0.28)
	f	5.3 (0.21)	7.4 (0.29)	8.1 (0.32)	8.4 (0.33)	8.5 (0.33)
Maximum weight kg (lb)		2.1 (4.6)	3.4 (7.5)	4.5 (9.9)	7.9 (17.4)	9.5 (20.9)

[1] *Including decoupling plate.*

Table 7: Dimensions, Enclosure Sizes H6–H10

Enclosure Size	H6	H7	H8	H9	H10
IP class	IP20	IP20	IP20	IP20	IP20

Enclosure Size		H6	H7	H8	H9	H10
Power [kW (hp)]	**3x200–240 V**	15–18.5 (20–25)	22–30 (30–40)	37–45 (50–60)	–	–
	3x380–480 V	30–45 (40–60)	55–75 (70–100)	90 (125)	–	–
	3x525–600 V	18.5–30 (25–40)	37–55 (50–70)	75–90 (100–125)	2.2–7.5 (3.0–10)	11–15 (15–20)
Height [mm (in)]	**A**	518 (20.4)	550 (21.7)	660 (26)	269 (10.6)	399 (15.7)
	A [(1)]	595 (23.4)/635 (25), 45 kW	630 (24.8)/690 (27.2), 75 kW	800 (31.5)	374 (14.7)	419 (16.5)
	a	495 (19.5)	521 (20.5)	631 (24.8)	257 (10.1)	380 (15)
Width [mm (in)]	**B**	239 (9.4)	313 (12.3)	375 (14.8)	130 (5.1)	165 (6.5)
	b	200 (7.9)	270 (10.6)	330 (13)	110 (4.3)	140 (5.5)
Depth [mm (in)]	**C**	242 (9.5)	335 (13.2)	335 (13.2)	205 (8.0)	248 (9.8)
Mounting hole [mm (in)]	**d**	–	–	–	11 (0.43)	12 (0.47)
	e	8.5 (0.33)	8.5 (0.33)	8.5 (0.33)	5.5 (0.22)	6.8 (0.27)
	f	15 (0.6)	17 (0.67)	17 (0.67)	9 (0.35)	7.5 (0.30)
Maximum weight kg (lb)		24.5 (54)	36 (79)	51 (112)	6.6 (14.6)	12 (26.5)

[1] *Including decoupling plate.*

Table 8: Dimensions, Enclosure Sizes I2–I8

Enclosure Size		I2	I3	I4	I6	I7	I8
IP class		IP54	IP54	IP54	IP54	IP54	IP54
Power [kW (hp)]	**3x380–480 V**	0.75–4.0 (1.0–5.0)	5.5–7.5 (7.5–10)	11–18.5 (15–25)	22–37 (30–50)	45–55 (60–70)	75–90 (100–125)
Height [mm (in)]	**A**	332 (13.1)	368 (14.5)	476 (18.7)	650 (25.6)	680 (26.8)	770 (30)
	a	318.5 (12.53)	354 (13.9)	460 (18.1)	624 (24.6)	648 (25.5)	739 (29.1)
Width [mm (in)]	**B**	115 (4.5)	135 (5.3)	180 (7.0)	242 (9.5)	308 (12.1)	370 (14.6)
	b	74 (2.9)	89 (3.5)	133 (5.2)	210 (8.3)	272 (10.7)	334 (13.2)
Depth [mm (in)]	**C**	225 (8.9)	237 (9.3)	290 (11.4)	260 (10.2)	310 (12.2)	335 (13.2)
Mounting hole [mm (in)]	**d**	11 (0.43)	12 (0.47)	12 (0.47)	19 (0.75)	19 (0.75)	19 (0.75)
	e	5.5 (0.22)	6.5 (0.26)	6.5 (0.26)	9 (0.35)	9 (0.35)	9 (0.35)
	f	9 (0.35)	9.5 (0.37)	9.5 (0.37)	9 (0.35)	9.8 (0.39)	9.8 (0.39)
Maximum weight kg (lb)		5.3 (11.7)	7.2 (15.9)	13.8 (30.42)	27 (59.5)	45 (99.2)	65 (143.3)

The dimensions are only for the physical units. When installing in an application, allow space above and below the units for cooling. The amount of space for free air passage is listed in 3.1.1 Side-by-side Installation.

3.2 Electrical Installation

3.2.1 Electrical Installation in General

All cabling must comply with national and local regulations on cable cross-sections and ambient temperature. Copper conductors are required. 75 °C (167 °F) is recommended.

Table 9: Tightening Torques for Enclosure Sizes H1–H8, 3x200–240 V & 3x380–480 V

Power [kW (hp)]				Torque [Nm (in-lb)]					
Enclosure size	IP class	3x200–240 V	3x380–480 V	Mains	Motor	DC connection	Control terminals	Ground	Relay
H1	IP20	0.25–1.5 (0.33–2)	0.37–1.5 (0.5–2)	0.8 (7)	0.8 (7)	0.8 (7)	0.5 (4)	0.8 (7)	0.5 (4)
H2	IP20	2.2 (3)	2.2–4.0 (3–5)	0.8 (7)	0.8 (7)	0.8 (7)	0.5 (4)	0.8 (7)	0.5 (4)
H3	IP20	3.7 (5)	5.5–7.5 (7.5–10)	0.8 (7)	0.8 (7)	0.8 (7)	0.5 (4)	0.8 (7)	0.5 (4)
H4	IP20	5.5–7.5 (7.5–10)	11–15 (15–20)	1.2 (11)	1.2 (11)	1.2 (11)	0.5 (4)	0.8 (7)	0.5 (4)
H5	IP20	11 (15)	18.5–22 (25–30)	1.2 (11)	1.2 (11)	1.2 (11)	0.5 (4)	0.8 (7)	0.5 (4)
H6	IP20	15–18.5 (20–25)	30–45 (40–60)	4.5 (40)	4.5 (40)	–	0.5 (4)	3 (27)	0.5 (4)
H7	IP20	22–30 (30–40)	55 (70)	10 (89)	10 (89)	–	0.5 (4)	3 (27)	0.5 (4)
H7	IP20	–	75 (100)	14 (124)	14 (124)	–	0.5 (4)	3 (27)	0.5 (4)
H8	IP20	37–45 (50–60)	90 (125)	24 (212) [1]	24 (212) [1]	–	0.5 (4)	3 (27)	0.5 (4)

[1] *Cable dimensions >95 mm².*

Table 10: Tightening Torques for Enclosure Sizes I2–I8

Power [kW (hp)]				Torque [Nm (in-lb)]				
Enclosure size	IP class	3x380–480 V	Mains	Motor	DC connection	Control terminals	Ground	Relay
I2	IP54	0.75–4.0 (1–5)	0.8 (7)	0.8 (7)	0.8 (7)	0.5 (4)	0.8 (7)	0.5 (4)
I3	IP54	5.5–7.5 (7.5–10)	0.8 (7)	0.8 (7)	0.8 (7)	0.5 (4)	0.8 (7)	0.5 (4)
I4	IP54	11–18.5 (15–25)	1.2 (11)	1.2 (11)	0.8 (7)	0.5 (4)	0.8 (7)	0.5 (4)
I6	IP54	22–37 (30–50)	4.5 (40)	4.5 (40)	–	0.5 (4)	3 (27)	0.6 (5)
I7	IP54	45–55 (60–70)	10 (89)	10 (89)	–	0.5 (4)	3 (27)	0.6 (5)

Power [kW (hp)]				Torque [Nm (in-lb)]				
I8	IP54	75–90 (100–125)	14 (124)/24 (212) [1]	14 (124)/24 (212) [1]	–	0.5 (4)	3 (27)	0.6 (5)

[1] *Cable dimensions ≤95 mm².*

Table 11: Tightening Torques for Enclosure Sizes H6–H10, 3x525–600 V

Power [kW (hp)]				Torque [Nm (in-lb)]				
Enclosure size	**IP class**	**3x525–600 V**	**Mains**	**Motor**	**DC connection**	**Control terminals**	**Ground**	**Relay**
H9	IP20	2.2–7.5 (3–10)	1.8 (16)	1.8 (16)	Not recommended	0.5 (4)	3 (27)	0.6 (5)
H10	IP20	11–15 (15–20)	1.8 (16)	1.8 (16)	Not recommended	0.5 (4)	3 (27)	0.6 (5)
H6	IP20	18.5–30 (25–40)	4.5 (40)	4.5 (40)	–	0.5 (4)	3 (27)	0.5 (4)
H7	IP20	37–55 (50–70)	10 (89)	10 (89)	–	0.5 (4)	3 (27)	0.5 (4)
H8	IP20	75–90 (100–125)	14 (124)/24 (212) [1]	14 (124)/24 (212) [1]	–	0.5 (4)	3 (27)	0.5 (4)

[1] *Cable dimensions ≤95 mm².*

3.2.2 IT Mains

⚠ CAUTION ⚠

IT Mains

Installation on isolated mains source, that is, IT mains.

- Ensure that the supply voltage does not exceed 440 V (3x380–480 V units) when connected to mains.

On IP20, 200–240 V, 0.25–11 kW (0.33–15 hp) and 380–480 V, IP20, 0.37–22 kW (0.5–30 hp) units, open the RFI switch by removing the screw on the side of the drive when at IT grid.

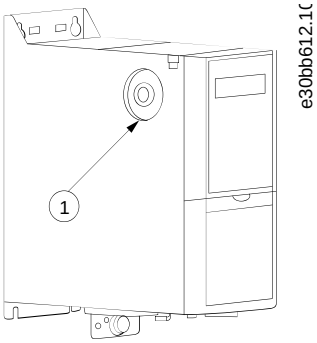

1	EMC screw

Illustration 2: IP20, 200–240 V, 0.25–11 kW (0.33–15 hp), IP20, 0.37–22 kW (0.5–30 hp), 380–480 V

On 400 V, 30–90 kW (40–125 hp) and 600 V units, set *parameter 14-50 RFI Filter* to *[0] Off* when operating in IT mains.

For IP54, 400 V, 0.75–18.5 kW (1–25 hp) units, the EMC screw is inside the drive, as shown in the the following illustration.

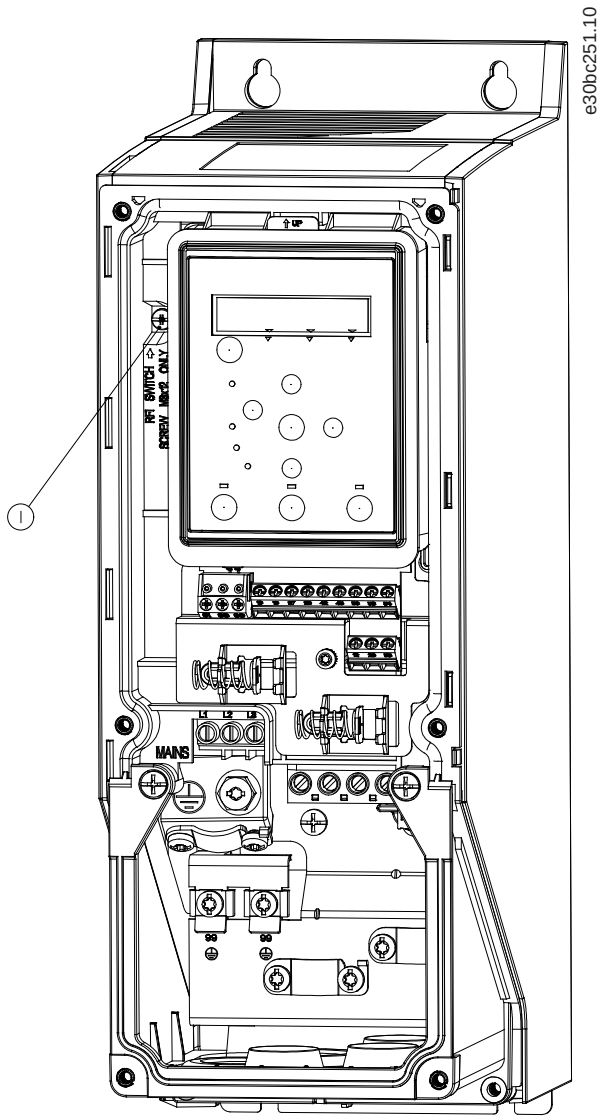

1	EMC screw

Illustration 3: IP54, 400 V, 0.75–18.5 kW (1–25 hp)

NOTICE

If reinserted, use only M3x12 screw.

3.2.3 Mains and Motor Connection

3.2.3.1 Introduction

The drive is designed to operate all standard 3-phase asynchronous motors.

- Use a shielded/armored motor cable to comply with EMC emission specifications and connect this cable to both the decoupling plate and the motor.
- Keep the motor cable as short as possible to reduce the noise level and leakage currents.
- For further details on mounting the decoupling plate, see *VLT® HVAC Basic Drive Decoupling Plate Mounting Instruction*.
- Also see EMC-Correct Installation in the 3.2.5 EMC-correct Electrical Installation.

3.2.3.2 Connecting to Mains and Motor

1. Mount the ground cables to the ground terminal.
2. Connect the motor to terminals U, V, and W, and then tighten the screws according to the torques.
3. Connect the mains supply to terminals L1, L2, and L3, and then tighten the screws according to the torques described in 3.2.1 Electrical Installation in General.

3.2.3.3 Relays and Terminals on Enclosure Sizes H1–H5

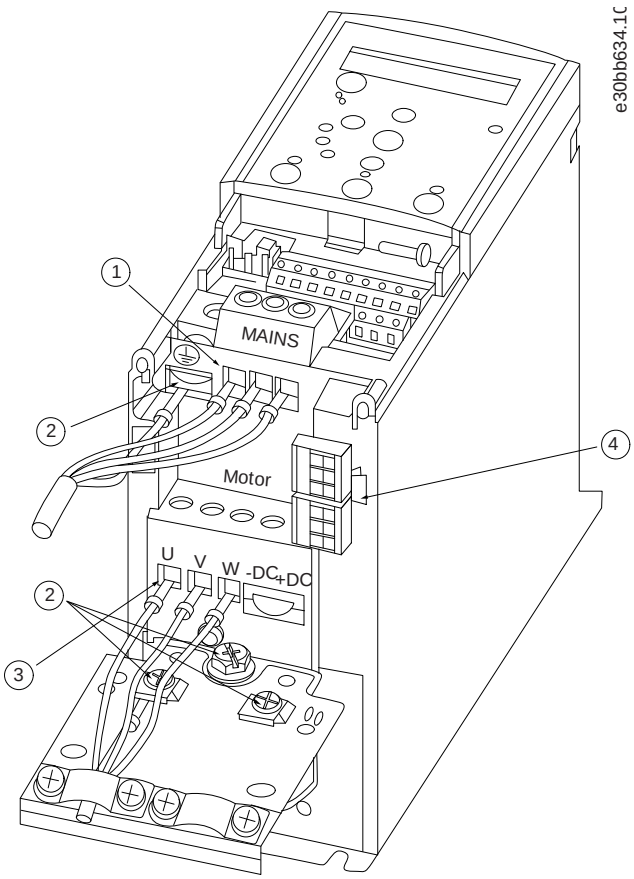

1	Mains	**2**	Ground
3	Motor	**4**	Relays

Illustration 4: Enclosure Sizes H1–H5, IP20, 200–240 V, 0.25–11 kW (0.33–15 hp), IP20, 380–480 V, 0.37–22 kW (0.5–30 hp)

3.2.3.4 Relays and Terminals on Enclosure Size H6

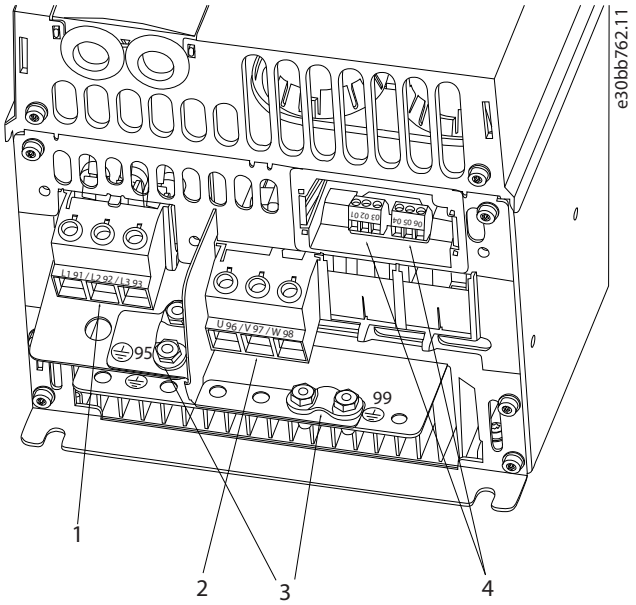

1	Mains	**2**	Motor
3	Ground	**4**	Relays

Illustration 5: Enclosure Size H6 , IP20, 380–480 V, 30–45 kW (40–60 hp) , IP20, 200–240 V, 15–18.5 kW (20–25 hp) , IP20, 525–600 V, 22–30 kW (30–40 hp)

3.2.3.5 Relays and Terminals on Enclosure Size H7

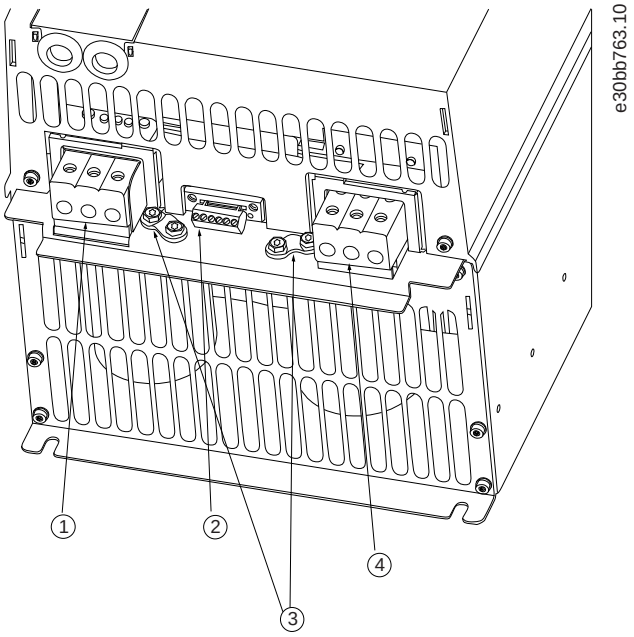

1	Mains	**2**	Relays
3	Ground	**4**	Motor

Illustration 6: Enclosure Size H7 , IP20, 380–480 V, 55–75 kW (70–100 hp) , IP20, 200–240 V, 22–30 kW (30–40 hp) , IP20, 525–600 V, 45–55 kW (60–70 hp)

3.2.3.6 Relays and Terminals on Enclosure Size H8

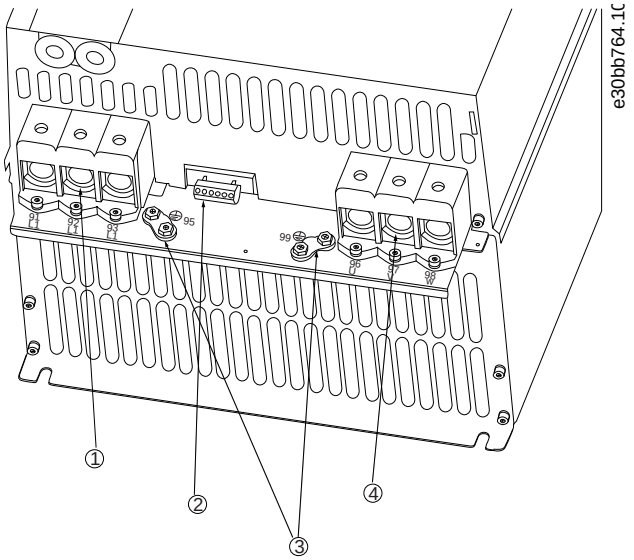

1	Mains	**2**	Relays

3 Ground	**4** Motor

Illustration 7: Enclosure Size H8 , IP20, 380–480 V, 90 kW (125 hp) , IP20, 200–240 V, 37–45 kW (50–60 hp) , IP20, 525–600 V, 75–90 kW (100–125 hp)

3.2.3.7 Connecting to Mains and Motor for Enclosure Size H9

Context:

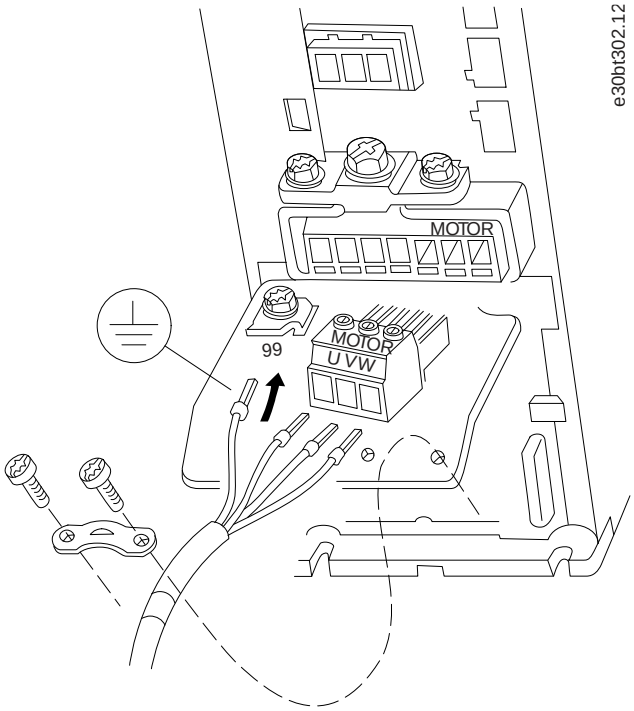

Illustration 8: Connecting the Drive to the Motor, Enclosure Size H9 IP20, 600 V, 2.2–7.5 kW (3.0–10 hp)

Procedure

1. Slide the mounting plate into place and tighten the 2 screws as shown in the following illustration.

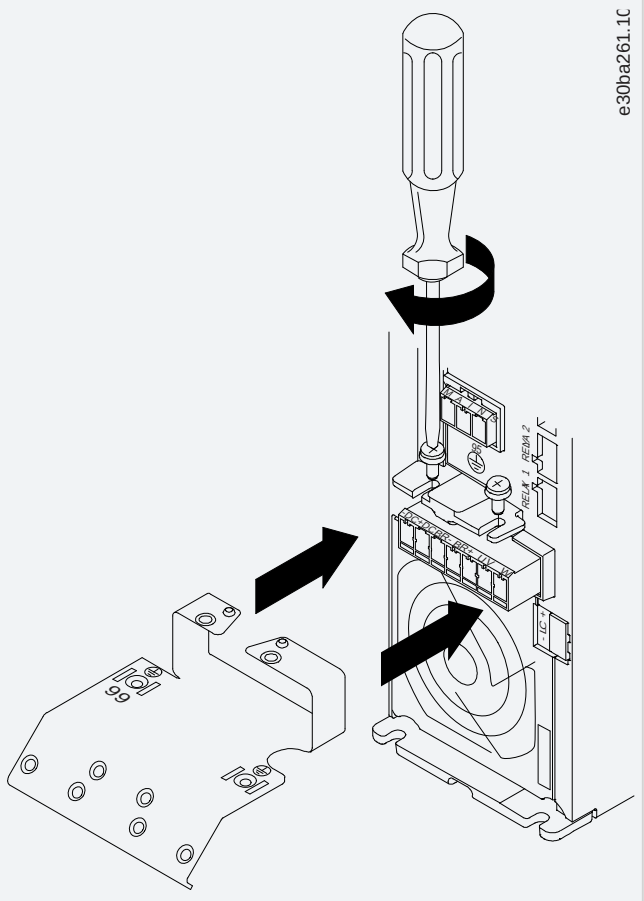

Illustration 9: Mounting the Mounting Plate

2. Mount the ground cable as shown in the following illustration.

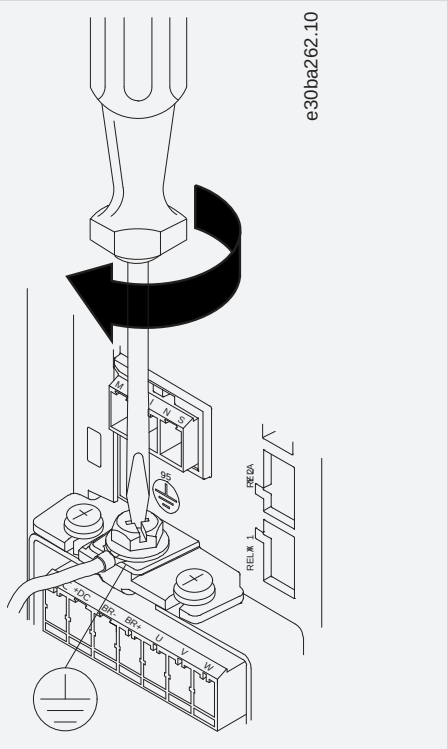

Illustration 10: Mounting the Ground Cable

3. Insert the mains cables to the mains plug and tighten the screws as shown in the following illustration. Use the tightening torques described in 3.2.1 Electrical Installation in General.

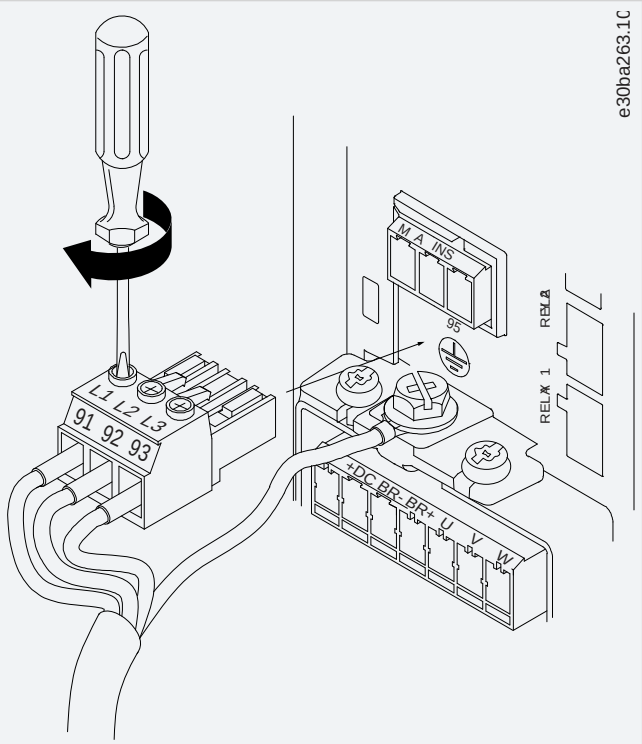

Illustration 11: Mounting the Mains Plug

4. Mount the support bracket across the mains cables and tighten the screws as shown in the following illustration. Use the tightening torques described in 3.2.1 Electrical Installation in General.

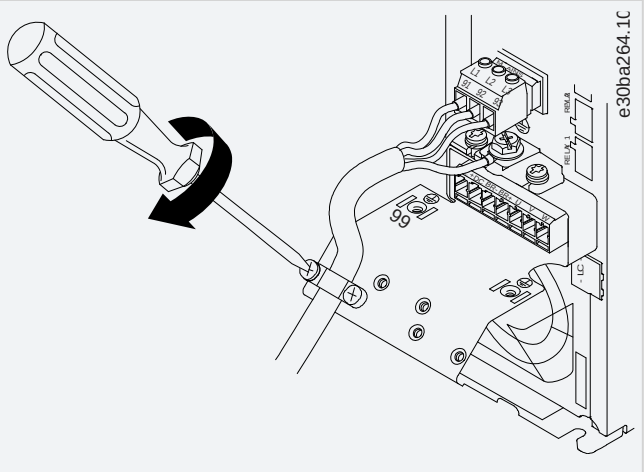

Illustration 12: Mounting the Support Bracket

3.2.3.8 Relays and Terminals on Enclosure Size H10

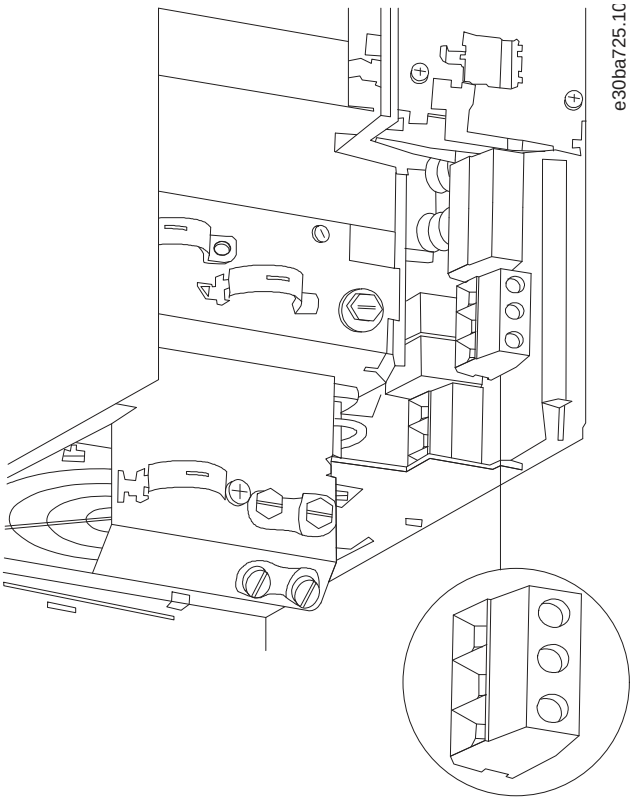

Illustration 13: Enclosure Size H10 , IP20, 600 V, 11–15 kW (15–20 hp)

3.2.3.9 Enclosure Size I2

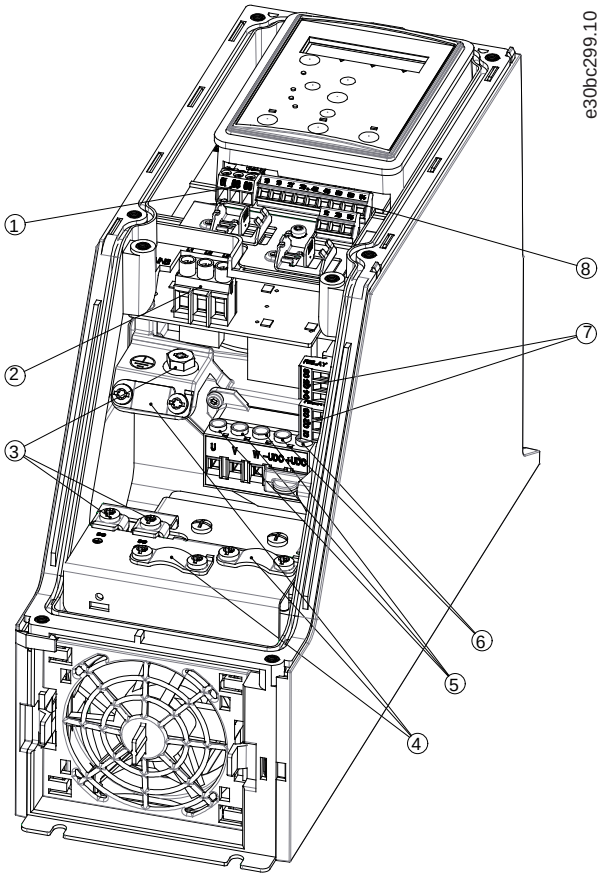

1	RS485	**2**	Mains
3	Ground	**4**	Cable clamps
5	Motor	**6**	UDC
7	Relays	**8**	I/O

Illustration 14: Enclosure Size I2, IP54, 380–480 V, 0.75–4.0 kW (1–5 hp)

3.2.3.10 Enclosure Size I3

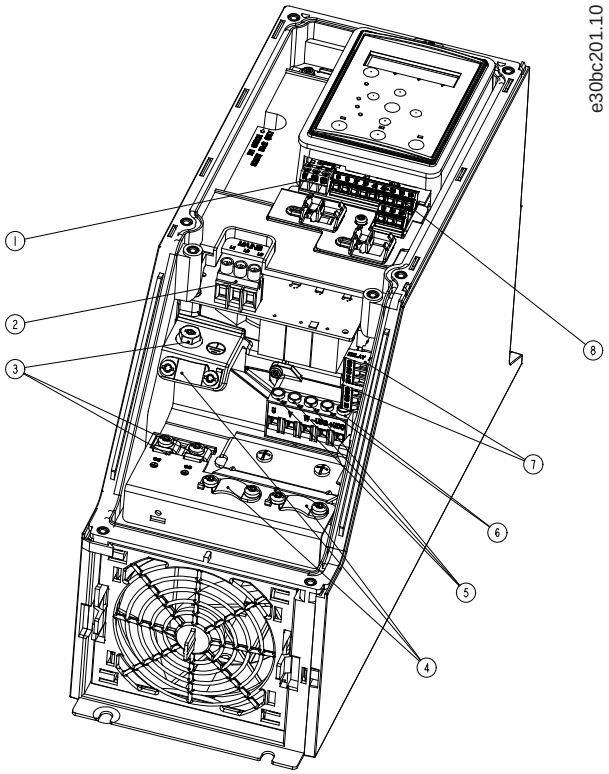

1	RS485	**2**	Mains
3	Ground	**4**	Cable clamps
5	Motor	**6**	UDC
7	Relays	**8**	I/O

Illustration 15: Enclosure Size I3, IP54, 380–480 V, 5.5–7.5 kW (7.5–10 hp)

3.2.3.11 Enclosure Size I4

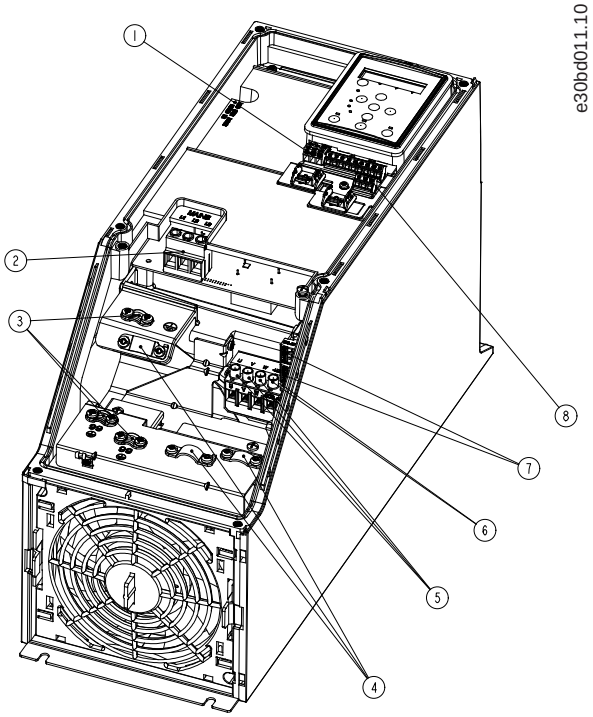

1	RS485	**2**	Mains
3	Ground	**4**	Cable clamps
5	Motor	**6**	UDC
7	Relays	**8**	I/O

Illustration 16: Enclosure Size I4, IP54, 380–480 V, 0.75–4.0 kW (1–5 hp)

3.2.3.12 IP54 Enclosure Sizes I2, I3, I4

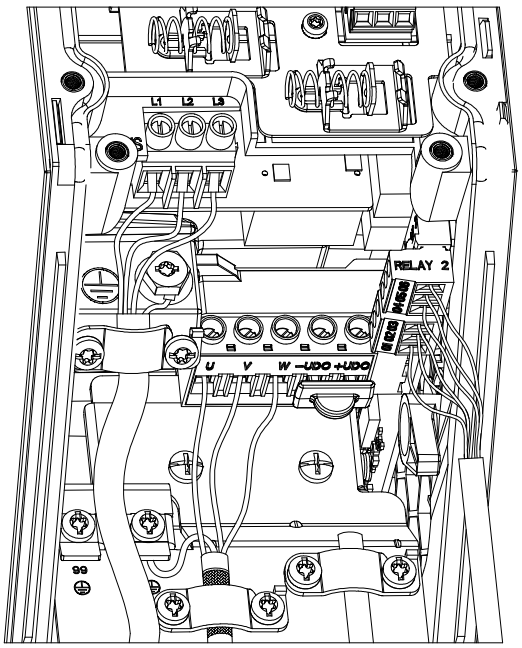

Illustration 17: IP54 Enclosure Sizes I2, I3, I4

3.2.3.13 Enclosure size I6

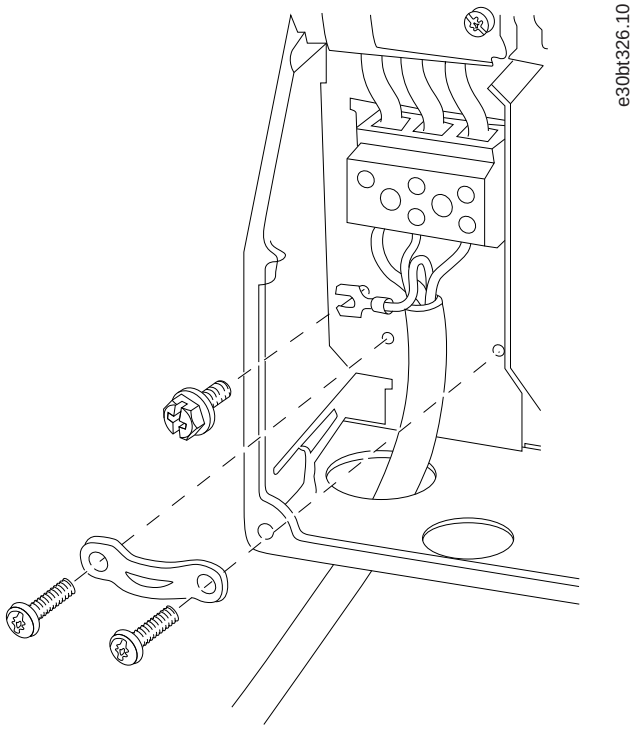

Illustration 18: Connecting to Mains for Enclosure Size I6, IP54, 380–480 V, 22–37 kW (30–50 hp)

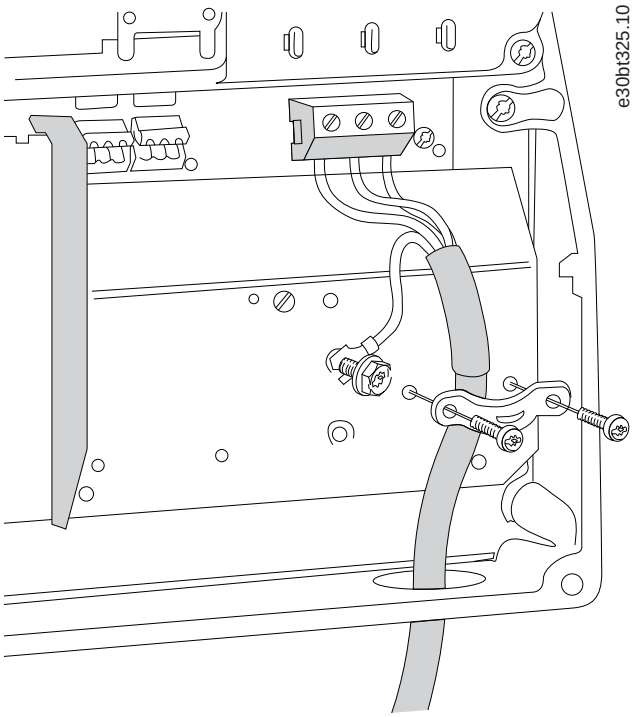

Illustration 19: Connecting to Motor for Enclosure Size I6, IP54, 380–480 V, 22–37 kW (30–50 hp)

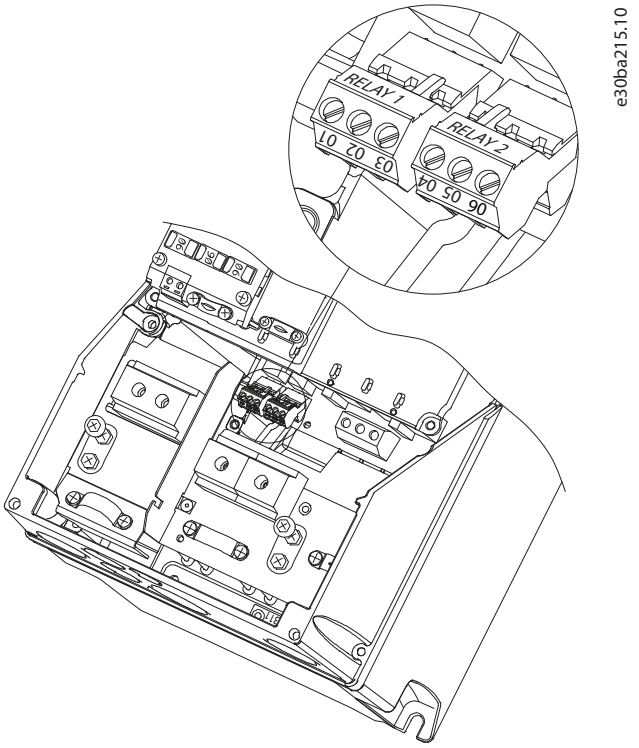

Illustration 20: Relays on Enclosure Size I6, IP54, 380–480 V, 22–37 kW (30–50 hp)

3.2.3.14 Enclosure size I7, I8

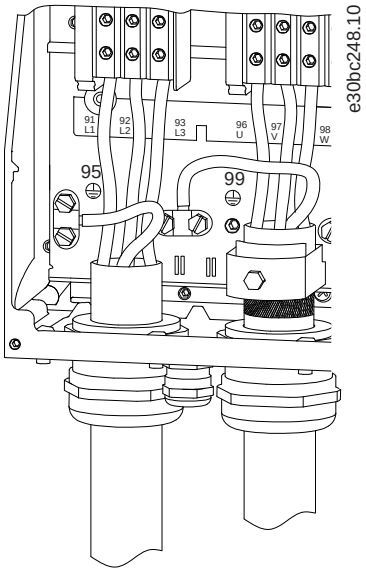

Illustration 21: Enclosure Sizes I7, I8, IP54, 380–480 V, 45–55 kW (60–70 hp), IP54, 380–480 V, 75–90 kW (100–125 hp)

3.2.4 Fuses and Circuit Breakers

3.2.4.1 Branch Circuit Protection

To prevent fire hazards, protect the branch circuits in an installation - switch gear, machines, and so on - against short circuits and overcurrent. Follow national and local regulations.

3.2.4.2 Short-circuit Protection

Danfoss recommends using the fuses and circuit breakers listed in this chapter to protect service personnel or other equipment in case of an internal failure in the unit or a short circuit on the DC link. The drive provides full short-circuit protection in case of a short circuit on the motor.

3.2.4.3 Overcurrent Protection

Provide overload protection to avoid overheating of the cables in the installation. Overcurrent protection must always be carried out according to local and national regulations. Design circuit breakers and fuses for protection in a circuit capable of supplying a maximum of 100000 A_{rms} (symmetrical), 480 V maximum.

3.2.4.4 UL/Non-UL Compliance

To ensure compliance with UL or IEC 61800-5-1, use the circuit breakers or fuses listed in this chapter. Circuit breakers must be designed for protection in a circuit capable of supplying a maximum of 10000 A_{rms} (symmetrical), 480 V maximum.

3.2.4.5 Recommendation of Fuses and Circuit Breakers

NOTICE

In the event of malfunction, failure to follow the protection recommendation may result in damage to the drive.

Table 12: Fuses and Circuit Breakers

	Circuit breaker		**Fuse**				
	UL	**Non-UL**	**UL**				**Non-UL**
			Bussmann	**Bussmann**	**Bussmann**	**Bussmann**	**Maximum fuse**
Power [kW (hp)]			**Type RK5**	**Type RK1**	**Type J**	**Type T**	**Type G**
3x200–240 V IP20							
0.25 (0.33)	–	–	FRS-R-10	KTN-R10	JKS-10	JJN-10	10
0.37 (0.5)			FRS-R-10	KTN-R10	JKS-10	JJN-10	10
0.75 (1)			FRS-R-10	KTN-R10	JKS-10	JJN-10	10
1.5 (2)			FRS-R-10	KTN-R10	JKS-10	JJN-10	10
2.2 (3)			FRS-R-15	KTN-R15	JKS-15	JJN-15	16
3.7 (5)			FRS-R-25	KTN-R25	JKS-25	JJN-25	25
5.5 (7.5)			FRS-R-50	KTN-R50	JKS-50	JJN-50	50
7.5 (10)			FRS-R-50	KTN-R50	JKS-50	JJN-50	50
11 (15)			FRS-R-80	KTN-R80	JKS-80	JJN-80	65
15 (20)	Cutler-Hammer EGE3100FFG	Moeller NZMB1-A125	FRS-R-100	KTN-R100	JKS-100	JJN-100	125
18.5 (25)			FRS-R-100	KTN-R100	JKS-100	JJN-100	125
22 (30)	Cutler-Hammer JGE3150FFG	Moeller NZMB1-A160	FRS-R-150	KTN-R150	JKS-150	JJN-150	160
30 (40)			FRS-R-150	KTN-R150	JKS-150	JJN-150	160
37 (50)	Cutler-Hammer JGE3200FFG	Moeller NZMB1-A200	FRS-R-200	KTN-R200	JKS-200	JJN-200	200
45 (60)			FRS-R-200	KTN-R200	JKS-200	JJN-200	200
3x380–480 V IP20							

0.37 (0.5)	–	–	FRS-R-10	KTS-R10	JKS-10	JJS-10	10
0.75 (1)			FRS-R-10	KTS-R10	JKS-10	JJS-10	10
1.5 (2)			FRS-R-10	KTS-R10	JKS-10	JJS-10	10
2.2 (3)			FRS-R-15	KTS-R15	JKS-15	JJS-15	16
3 (4)			FRS-R-15	KTS-R15	JKS-15	JJS-15	16
4 (5)			FRS-R-15	KTS-R15	JKS-15	JJS-15	16
5.5 (7.5)			FRS-R-25	KTS-R25	JKS-25	JJS-25	25
7.5 (10)			FRS-R-25	KTS-R25	JKS-25	JJS-25	25
11 (15)			FRS-R-50	KTS-R50	JKS-50	JJS-50	50
15 (20)			FRS-R-50	KTS-R50	JKS-50	JJS-50	50
18.5 (25)			FRS-R-80	KTS-R80	JKS-80	JJS-80	65
22 (30)			FRS-R-80	KTS-R80	JKS-80	JJS-80	65
30 (40)	Cutler-Hammer EGE3125FFG	Moeller NZMB1-A125	FRS-R-125	KTS-R125	JKS-R125	JJS-R125	80
37 (50)			FRS-R-125	KTS-R125	JKS-R125	JJS-R125	100
45 (60)			FRS-R-125	KTS-R125	JKS-R125	JJS-R125	125
55 (70)	Cutler-Hammer JGE3200FFG	Moeller NZMB1-A200	FRS-R-200	KTS-R200	JKS-R200	JJS-R200	150
75 (100)			FRS-R-200	KTS-R200	JKS-R200	JJS-R200	200
90 (125)	Cutler-Hammer JGE3250FFG	Moeller NZMB2-A250	FRS-R-250	KTS-R250	JKS-R250	JJS-R250	250
3x525–600 V IP20							
2.2 (3)	–	–	FRS-R-20	KTS-R20	JKS-20	JJS-20	20
3 (4)			FRS-R-20	KTS-R20	JKS-20	JJS-20	20
3.7 (5)			FRS-R-20	KTS-R20	JKS-20	JJS-20	20
5.5 (7.5)			FRS-R-20	KTS-R20	JKS-20	JJS-20	20
7.5 (10)			FRS-R-20	KTS-R20	JKS-20	JJS-20	30
11 (15)	–	–	FRS-R-30	KTS-R30	JKS-30	JJS-30	35
15 (20)			FRS-R-30	KTS-R30	JKS-30	JJS-30	35
18.5 (25)	Cutler-Hammer EGE3080FFG	Cutler-Hammer EGE3080FFG	FRS-R-80	KTS-R80	JKS-80	JJS-80	80
22 (30)			FRS-R-80	KTS-R80	JKS-80	JJS-80	80
30 (40)			FRS-R-80	KTS-R80	JKS-80	JJS-80	80
37 (50)	Cutler-Hammer JGE3125FFG	Cutler-Hammer JGE3125FFG	FRS-R-125	KTS-R125	JKS-125	JJS-125	125
45 (60)			FRS-R-125	KTS-R125	JKS-125	JJS-125	125
55 (70)			FRS-R-125	KTS-R125	JKS-125	JJS-125	125
75 (100)	Cutler-Hammer JGE3200FAG	Cutler-Hammer JGE3200FAG	FRS-R-200	KTS-R200	JKS-200	JJS-200	200
90 (125)		–	FRS-R-200	KTS-R200	JKS-200	JJS-200	200

3x380–480 V IP54							
0.75 (1)	–	PKZM0-16	FRS-R-10	KTS-R-10	JKS-10	JJS-10	16
1.5 (2)		PKZM0-16	FRS-R-10	KTS-R-10	JKS-10	JJS-10	16
2.2 (3)		PKZM0-16	FRS-R-15	KTS-R-15	JKS-15	JJS-15	16
3 (4)		PKZM0-16	FRS-R-15	KTS-R-15	JKS-15	JJS-15	16
4 (5)		PKZM0-16	FRS-R-15	KTS-R-15	JKS-15	JJS-15	16
5.5 (7.5)		PKZM0-25	FRS-R-25	KTS-R-25	JKS-25	JJS-25	25
7.5 (10)		PKZM0-25	FRS-R-25	KTS-R-25	JKS-25	JJS-25	25
11 (15)		PKZM4-63	FRS-R-50	KTS-R-50	JKS-50	JJS-50	63
15 (20)		PKZM4-63	FRS-R-50	KTS-R-50	JKS-50	JJS-50	63
18.5 (25)		PKZM4-63	FRS-R-80	KTS-R-80	JKS-80	JJS-80	63
22 (30)	Moeller NZMB1-A125	–	FRS-R-80	KTS-R-80	JKS-80	JJS-80	125
30 (40)			FRS-R-125	KTS-R-125	JKS-125	JJS-125	125
37 (50)			FRS-R-125	KTS-R-125	JKS-125	JJS-125	125
45 (60)	Moeller NZMB2-A160	–	FRS-R-125	KTS-R-125	JKS-125	JJS-125	160
55 (70)			FRS-R-200	KTS-R-200	JKS-200	JJS-200	160
75 (100)	Moeller NZMB2-A250	–	FRS-R-200	KTS-R-200	JKS-200	JJS-200	200
90 (125)			FRS-R-250	KTS-R-250	JKS-200	JJS-200	200

3.2.5 EMC-correct Electrical Installation

General points to be observed to ensure EMC-correct electrical installation:

- Use only shielded/armored motor cables and shielded/armored control cables.
- Ground the shield at both ends.
- Avoid installation with twisted shield ends (pigtails), because it reduces the shielding effect at high frequencies. Use the cable clamps provided.
- Ensure the same potential between the drive and the ground potential of PLC.
- Use star washers and galvanically conductive installation plates.

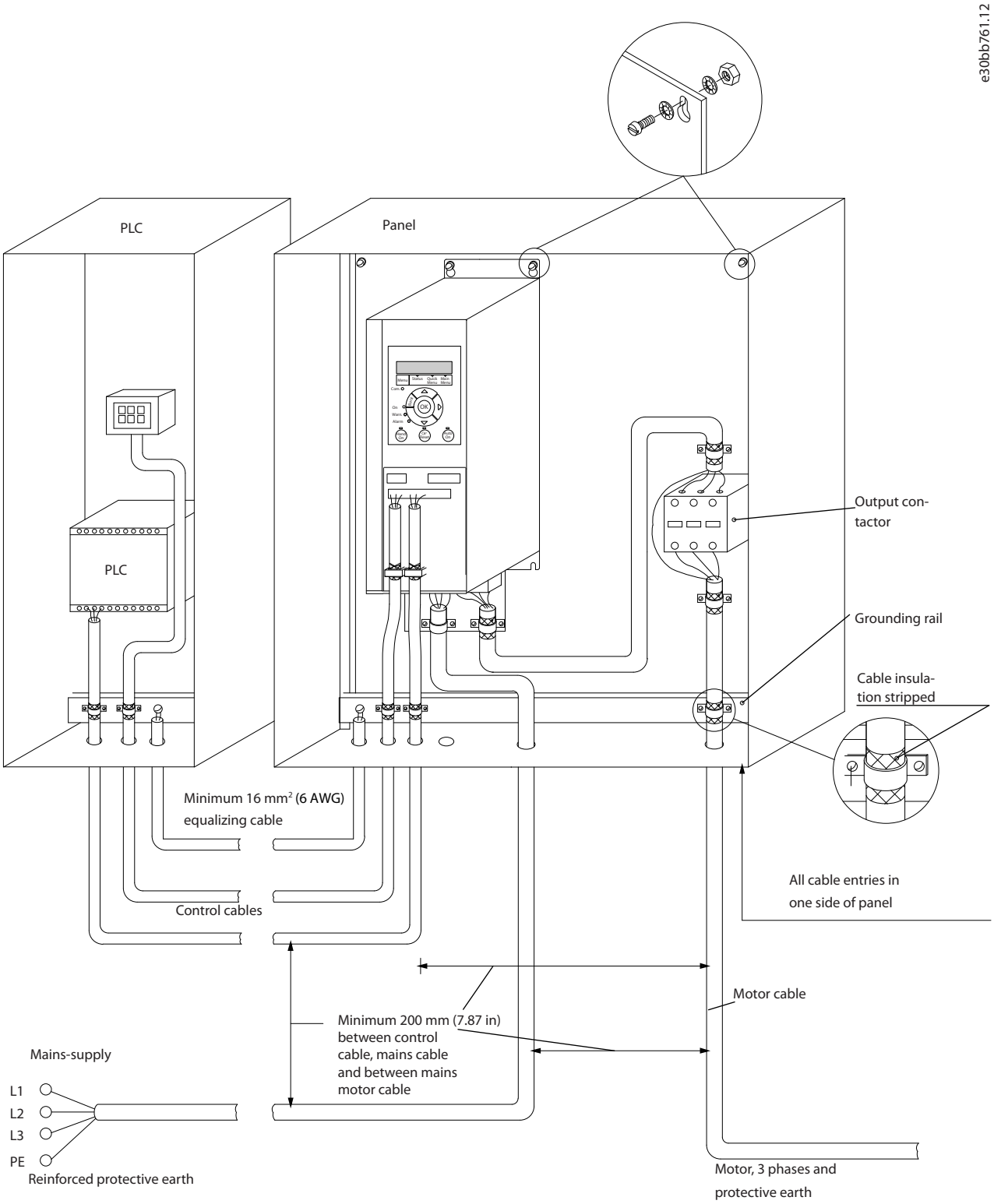

Illustration 22: EMC-correct Electrical Installation

3.2.6 Control Terminals

Remove the terminal cover to access the control terminals.

Use a flat-edged screwdriver to push down the lock lever of the terminal cover under the LCP, then remove the terminal cover as shown in the following illustration.

For IP54 units, control terminals can be accessed after removing the front cover.

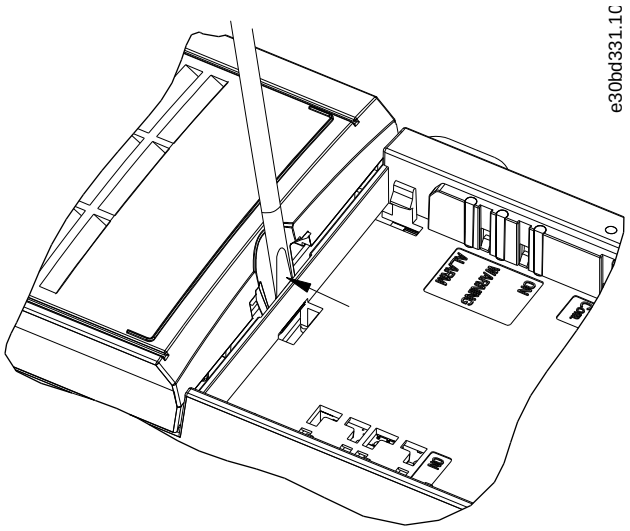

Illustration 23: Removing the Terminal Cover

The following illustration shows all the drive control terminals. Applying start (terminal 18), connection between terminals 12-27, and an analog reference (terminal 53 or 54, and 55) make the drive run.

The digital input mode of terminal 18, 19, and 27 is set in *parameter 5-00 Digital Input Mode* (PNP is default value). Digital input 29 mode is set in *parameter 5-03 Digital Input 29 Mode* (PNP is default value).

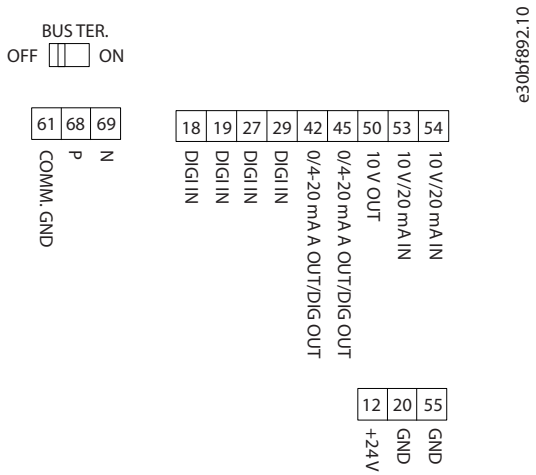

Illustration 24: Control Terminals

3.2.7 Electrical Wiring

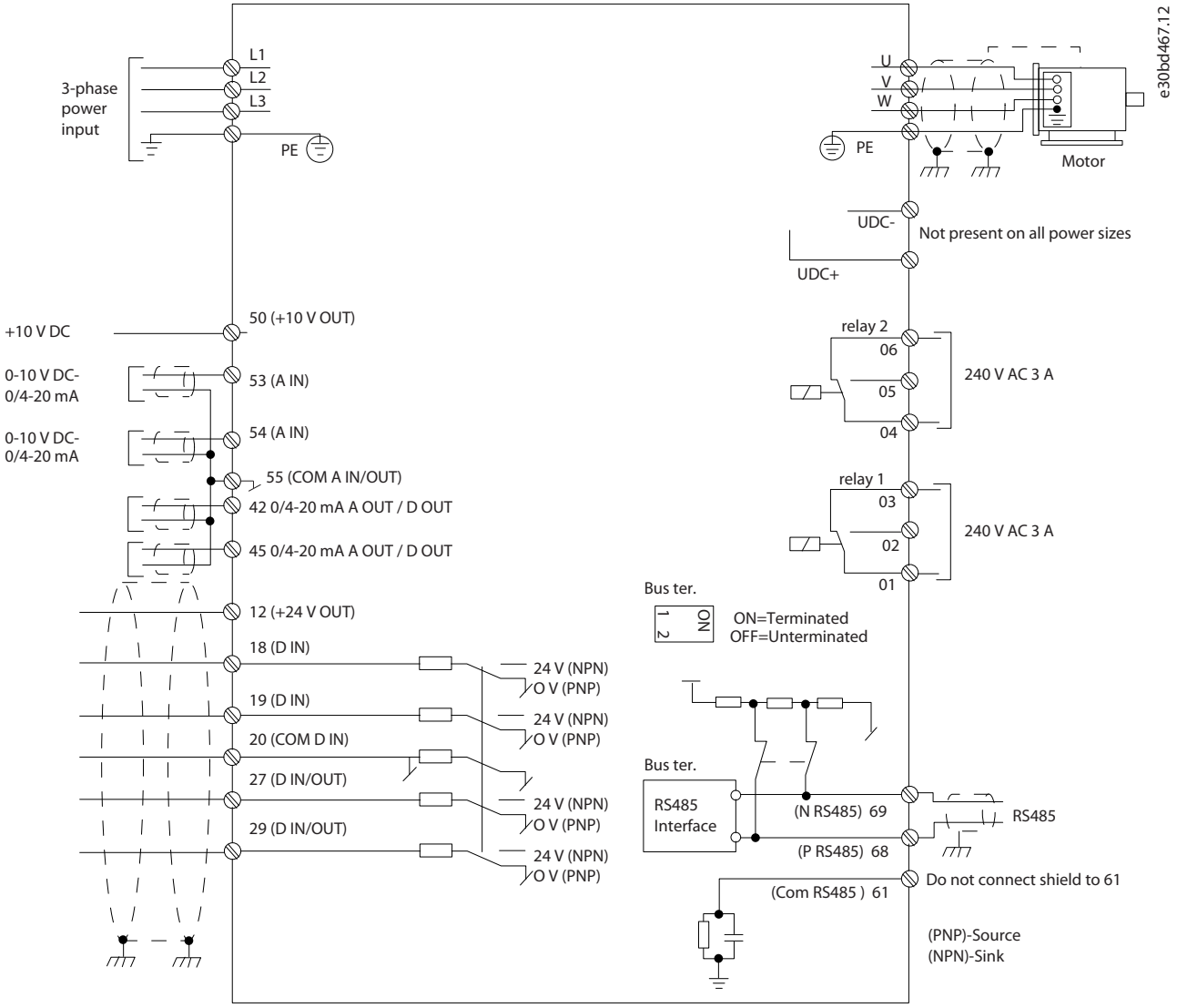

Illustration 25: Basic Wiring Schematic Drawing

NOTICE

There is no access to UDC- and UDC+ on the following units:

- IP20, 380–480 V, 30–90 kW (40–125 hp)
- IP20, 200–240 V, 15–45 kW (20–60 hp)
- IP20, 525–600 V, 2.2–90 kW (3–125 hp)
- IP54, 380–480 V, 22–90 kW (30–125 hp)

3.2.8 Acoustic Noise or Vibration

If the motor or the equipment driven by the motor - for example, a fan - is making noise or vibrations at certain frequencies, configure the following parameters or parameter groups to reduce or eliminate the noise or vibrations:

- *Parameter group 4-6* Speed Bypass*.
- Set *parameter 14-03 Overmodulation* to *[0] Off*.
- Switching pattern and switching frequency *parameter group 14-0* Inverter Switching*.
- *Parameter 1-64 Resonance Dampening*.

4 Programming

4.1 Local Control Panel (LCP)

The drive can be programmed from the LCP or from a PC via the RS485 COM port by installing the MCT 10 Setup Software.

The LCP is divided into 4 functional sections.

- A. Display
- B. Menu key
- C. Navigation keys and indicator lights
- D. Operation keys and indicator lights

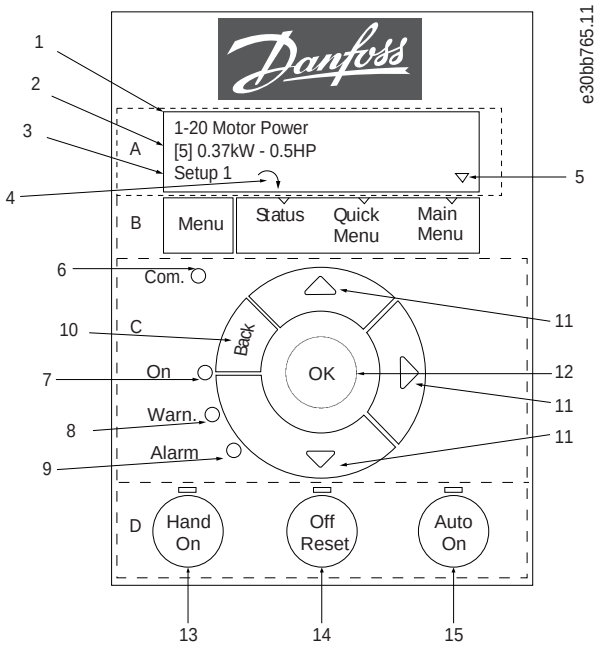

Illustration 26: Local Control Panel (LCP)

A. Display

The LCD-display is illuminated with 2 alphanumeric lines. All data is shown on the LCP. The illustration 26 describes the information that can be read from the display.

Table 13: Legend to Section A

1	Parameter number and name.
2	Parameter value.
3	Setup number shows the active setup and the edit setup. If the same setup acts as both active and edit setup, only that setup number is shown (factory setting). When active and edit setup differ, both numbers are shown in the display (setup 12). The number flashing indicates the edit setup.
4	Motor direction is shown to the bottom left of the display – indicated by a small arrow pointing either clockwise or counter-clockwise.

5	The triangle indicates if the LCP is in Status, Quick Menu, or Main Menu.

B. Menu key

Press [Menu] to select among Status, Quick Menu, or Main Menu.

C. Navigation keys and indicator lights

Table 14: Legend to Section C

6	Com. LED: Flashes during bus communication.
7	Green LED/On: Control section is working correctly.
8	Yellow LED/Warn.: Indicates a warning.
9	Flashing Red LED/Alarm: Indicates an alarm.
10	[Back]: For moving to the previous step or layer in the navigation structure.
11	[▵] [▿] [▹]: For navigating among parameter groups and parameters, and within parameters. They can also be used for setting local reference.
12	[OK]: For selecting a parameter and for accepting changes to parameter settings.

D. Operation keys and indicator lights

Table 15: Legend to Section D

13	[Hand On]: Starts the motor and enables control of the drive via the LCP. **NOTICE** ***[2] Coast inverse* is the default option for *parameter 5-12 Terminal 27 Digital Input*. If there is no 24 V supply to terminal 27, [Hand On] does not start the motor. Connect terminal 12 to terminal 27.**
14	[Off/Reset]: Stops the motor (Off). If in alarm mode, the alarm is reset.
15	[Auto On]: The drive is controlled either via control terminals or serial communication.

4.2 Setup Wizard

4.2.1 Setup Wizard Introduction

The built-in wizard menu guides the installer through the setup of the drive in a clear and structured manner for open-loop and closed-loop applications, and for quick motor settings.

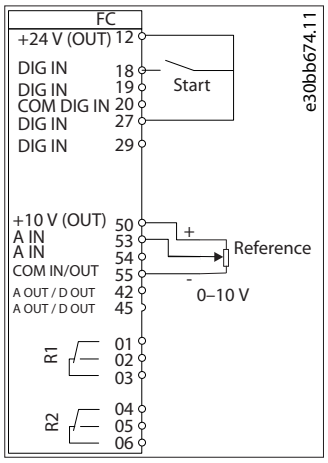

Illustration 27: Drive Wiring

The wizard is shown after power-up until any parameter has been changed. The wizard can always be accessed again through the quick menu. Press [OK] to start the wizard. Press [Back] to return to the status view.

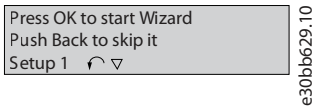

Illustration 28: Start-up/Quit Wizard

4.2.2 Setup Wizard for Open-loop Applications

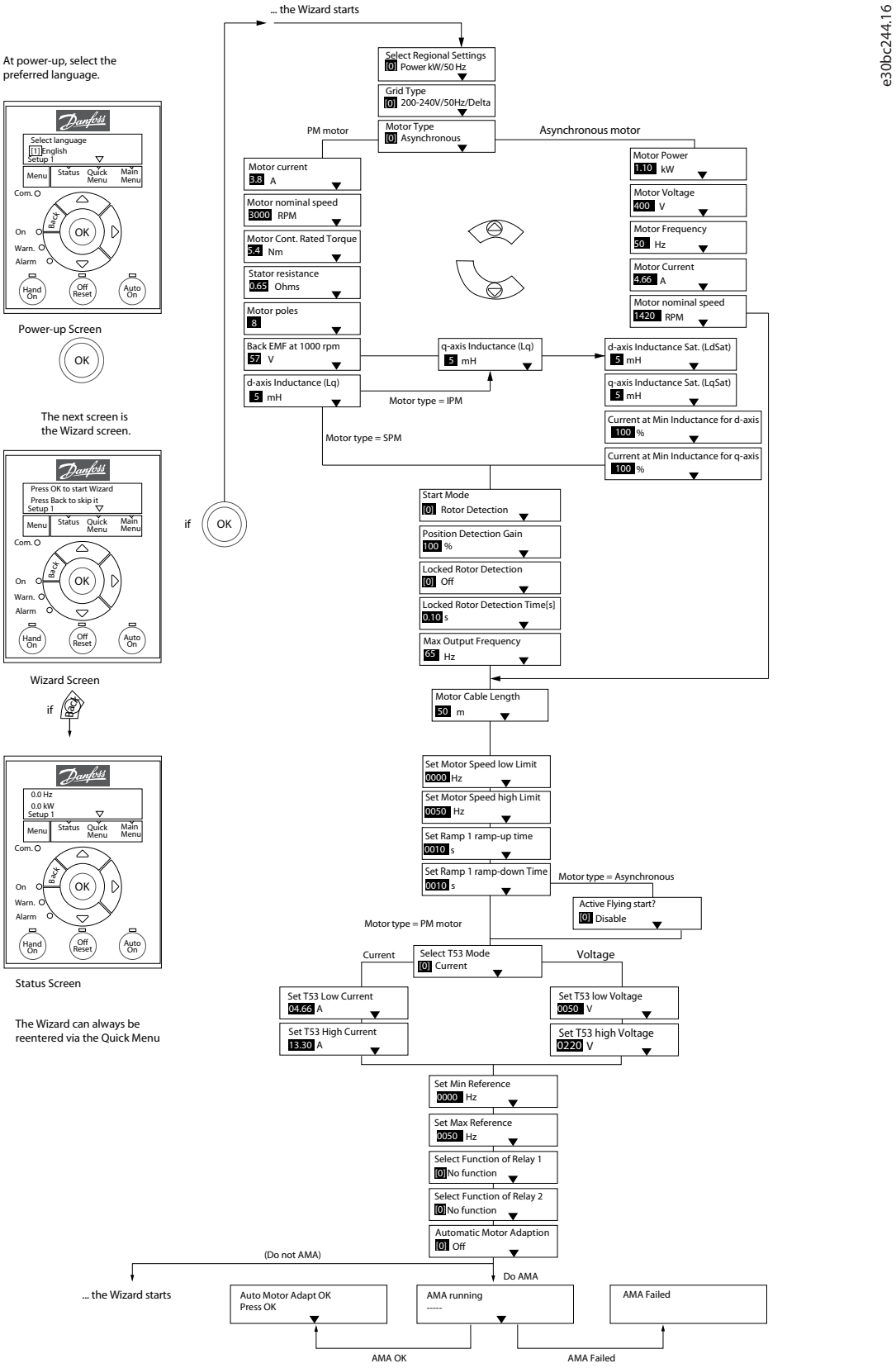

Illustration 29: Setup Wizard for Open-loop Applications

Table 16: Setup Wizard for Open-loop Applications

Parameter	Option	Default	Usage
Parameter 0-03 Regional Settings	*[0] International* *[1] US*	*[0] International*	–
Parameter 0-06 GridType	*[0] 200–240 V/50 Hz/IT-grid* *[1] 200–240 V/50 Hz/Delta* *[2] 200–240 V/50 Hz* *[10] 380–440 V/50 Hz/IT-grid* *[11] 380–440 V/50 Hz/Delta* *[12] 380–440 V/50 Hz* *[20] 440–480 V/50 Hz/IT-grid* *[21] 440–480 V/50 Hz/Delta* *[22] 440–480 V/50 Hz* *[30] 525–600 V/50 Hz/IT-grid* *[31] 525–600 V/50 Hz/Delta* *[32] 525–600 V/50 Hz* *[100] 200–240 V/60 Hz/IT-grid* *[101] 200–240 V/60 Hz/Delta* *[102] 200–240 V/60 Hz* *[110] 380–440 V/60 Hz/IT-grid* *[111] 380–440 V/60 Hz/Delta* *[112] 380–440 V/60 Hz* *[120] 440–480 V/60 Hz/IT-grid* *[121] 440–480 V/60 Hz/Delta* *[122] 440–480 V/60 Hz* *[130] 525–600 V/60 Hz/IT-grid* *[131] 525–600 V/60 Hz/Delta* *[132] 525–600 V/60 Hz*	Size related	Select the operating mode for restart after reconnection of the drive to mains voltage after power down.

Parameter	Option	Default	Usage
Parameter 1-10 Motor Construction	**[0] Asynchron* *[1] PM, non-salient SPM* *[3] PM, salient IPM*	*[0] Asynchron*	Setting the parameter value might change these parameters: • *Parameter 1-01 Motor Control Principle.* • *Parameter 1-03 Torque Characteristics.* • *Parameter 1-08 Motor Control Bandwidth.* • *Parameter 1-14 Damping Gain.* • *Parameter 1-15 Low Speed Filter Time Const.* • *Parameter 1-16 High Speed Filter Time Const.* • *Parameter 1-17 Voltage Filter Time Const.* • *Parameter 1-20 Motor Power.* • *Parameter 1-22 Motor Voltage.* • *Parameter 1-23 Motor Frequency.* • *Parameter 1-24 Motor Current.* • *Parameter 1-25 Motor Nominal Speed.* • *Parameter 1-26 Motor Cont. Rated Torque.* • *Parameter 1-30 Stator Resistance (Rs).* • *Parameter 1-33 Stator Leakage Reactance (X1).* • *Parameter 1-35 Main Reactance (Xh).* • *Parameter 1-37 d-axis Inductance (Ld).* • *Parameter 1-38 q-axis Inductance (Lq).* • *Parameter 1-39 Motor Poles.* • *Parameter 1-40 Back EMF at 1000 RPM.* • *Parameter 1-44 d-axis Inductance Sat. (LdSat).* • *Parameter 1-45 q-axis Inductance Sat. (LqSat).* • *Parameter 1-46 Position Detection Gain.* • *Parameter 1-48 Current at Min Inductance for d-axis.* • *Parameter 1-49 Current at Min Inductance for q-axis.* • *Parameter 1-66 Min. Current at Low Speed.* • *Parameter 1-70 PM Start Mode.* • *Parameter 1-72 Start Function.* • *Parameter 1-73 Flying Start.* • *Parameter 1-80 Function at Stop.* • *Parameter 1-82 Min Speed for Function at Stop [Hz].* • *Parameter 1-90 Motor Thermal Protection.* • *Parameter 2-00 DC Hold/Motor Preheat Current.* • *Parameter 2-01 DC Brake Current.* • *Parameter 2-02 DC Braking Time.* • *Parameter 2-04 DC Brake Cut In Speed.* • *Parameter 2-10 Brake Function.* • *Parameter 4-14 Motor Speed High Limit [Hz].* • *Parameter 4-19 Max Output Frequency.* • *Parameter 4-58 Missing Motor Phase Function.* • *Parameter 14-65 Speed Derate Dead Time Compensation.*

Parameter	Option	Default	Usage
Parameter 1-20 Motor Power	*0.12–110 kW/0.16–150 hp*	Size related	Enter the motor power from the nameplate data.
Parameter 1-22 Motor Voltage	*50–1000 V*	Size related	Enter the motor voltage from the nameplate data.
Parameter 1-23 Motor Frequency	*20–400 Hz*	Size related	Enter the motor frequency from the nameplate data.
Parameter 1-24 Motor Current	*0.01–10000.00 A*	Size related	Enter the motor current from the nameplate data.
Parameter 1-25 Motor Nominal Speed	*50–9999 RPM*	Size related	Enter the motor nominal speed from the nameplate data.
Parameter 1-26 Motor Cont. Rated Torque	*0.1–1000.0 Nm*	Size related	This parameter is available when *parameter 1-10 Motor Construction* is set to options that enable permanent motor mode. **NOTICE** Changing this parameter affects the settings of other parameters.
Parameter 1-29 Automatic Motor Adaption (AMA)	See *parameter 1-29 Automatic Motor Adaption (AMA)*.	*Off*	Performing an AMA optimizes motor performance.
Parameter 1-30 Stator Resistance (Rs)	*0.000–99.990 Ω*	Size related	Set the stator resistance value.
Parameter 1-37 d-axis Inductance (Ld)	*0.000–1000.000 mH*	Size related	Enter the value of the d-axis inductance. Obtain the value from the permanent magnet motor datasheet.
Parameter 1-38 q-axis Inductance (Lq)	*0.000–1000.000 mH*	Size related	Enter the value of the q-axis inductance.
Parameter 1-39 Motor Poles	*2–100*	*4*	Enter the number of motor poles.
Parameter 1-40 Back EMF at 1000 RPM	*10–9000 V*	Size related	Line-line RMS back EMF voltage at 1000 RPM.
Parameter 1-42 Motor Cable Length	*0–100 m*	*50 m*	Enter the motor cable length.
Parameter 1-44 d-axis Inductance Sat. (LdSat)	*0.000–1000.000 mH*	Size related	This parameter corresponds to the inductance saturation of Ld. Ideally, this parameter has the same value as *parameter 1-37 d-axis Inductance (Ld)*. However, if the motor supplier provides an induction curve, enter the induction value, which is 200% of the nominal current.

Parameter	Option	Default	Usage
Parameter 1-45 q-axis Inductance Sat. (LqSat)	*0.000–1000.000 mH*	Size related	This parameter corresponds to the inductance saturation of Lq. Ideally, this parameter has the same value as *parameter 1-38 q-axis Inductance (Lq)*. However, if the motor supplier provides an induction curve, enter the induction value, which is 200% of the nominal current.
Parameter 1-46 Position Detection Gain	*20–200%*	*100%*	Adjusts the height of the test pulse during position detection at start.
Parameter 1-48 Current at Min Inductance for d-axis	*20–200%*	*100%*	Enter the inductance saturation point.
Parameter 1-49 Current at Min Inductance for q-axis	*20–200%*	*100%*	This parameter specifies the saturation curve of the d- and q-inductance values. From 20–100% of this parameter, the inductances are linearly approximated due to *parameter 1-37 d-axis Inductance (Ld)*, *parameter 1-38 q-axis Inductance (Lq)*, *parameter 1-44 d-axis Inductance Sat. (LdSat)*, and *parameter 1-45 q-axis Inductance Sat. (LqSat)*.
Parameter 1-70 PM Start Mode	*[0] Rotor Detection* *[1] Parking*	*[0] Rotor Detection*	Select the PM motor start mode.
Parameter 1-73 Flying Start	*[0] Disabled* *[1] Enabled*	*[0] Disabled*	Select *[1] Enabled* to enable the drive to catch a motor spinning due to mains drop-out. Select *[0] Disabled* if this function is not required. When this parameter is set to *[1] Enabled*, *parameter 1-71 Start Delay* and *parameter 1-72 Start Function* are not functional. *Parameter 1-73 Flying Start* is active in VVC+ mode only.
Parameter 3-02 Minimum Reference	*-4999.000–4999.000*	*0*	The minimum reference is the lowest value obtainable by summing all references.
Parameter 3-03 Maximum Reference	*-4999.000–4999.000*	*50*	The maximum reference is the lowest obtainable by summing all references.
Parameter 3-41 Ramp 1 Ramp Up Time	*0.05–3600.00 s*	Size related	If asynchronous motor is selected, the ramp-up time is from 0 to rated *parameter 1-23 Motor Frequency*. If PM motor is selected, the ramp-up time is from 0 to *parameter 1-25 Motor Nominal Speed*.
Parameter 3-42 Ramp 1 Ramp Down Time	*0.05–3600.00 s*	Size related	For asynchronous motors, the ramp-down time is from rated *parameter 1-23 Motor Frequency* to *0*. For PM motors, the ramp-down time is from *parameter 1-25 Motor Nominal Speed* to *0*.
Parameter 4-12 Motor Speed Low Limit [Hz]	*0.0–400.0 Hz*	*0 Hz*	Enter the minimum limit for low speed.
Parameter 4-14 Motor Speed High Limit [Hz]	*0.0–400.0 Hz*	*100 Hz*	Enter the maximum limit for high speed.

Parameter	Option	Default	Usage
Parameter 4-19 Max Output Frequency	*0.0–400.0 Hz*	*100 Hz*	Enter the maximum output frequency value. If *parameter 4-19 Max Output Frequency* is set lower than *parameter 4-14 Motor Speed High Limit [Hz]*, *parameter 4-14 Motor Speed High Limit [Hz]* is set equal to *parameter 4-19 Max Output Frequency* automatically.
Parameter 5-40 Function Relay	See *parameter 5-40 Function Relay*.	*[9] Alarm*	Select the function to control output relay 1.
Parameter 5-40 Function Relay	See *parameter 5-40 Function Relay*.	*[5] Drive running*	Select the function to control output relay 2.
Parameter 6-10 Terminal 53 Low Voltage	*0.00–10.00 V*	*0.07 V*	Enter the voltage that corresponds to the low reference value.
Parameter 6-11 Terminal 53 High Voltage	*0.00–10.00 V*	*10 V*	Enter the voltage that corresponds to the high reference value.
Parameter 6-12 Terminal 53 Low Current	*0.00–20.00 mA*	*4 mA*	Enter the current that corresponds to the low reference value.
Parameter 6-13 Terminal 53 High Current	*0.00–20.00 mA*	*20 mA*	Enter the current that corresponds to the high reference value.
Parameter 6-19 Terminal 53 mode	*[0] Current* *[1] Voltage*	*[1] Voltage*	Select if terminal 53 is used for current or voltage input.
Parameter 30-22 Locked Rotor Detection	*[0] Off* *[1] On*	*[0] Off*	–
Parameter 30-23 Locked Rotor Detection Time [s]	*0.05–1 s*	*0.10 s*	–

4.2.3 Setup Wizard for Closed-loop Applications

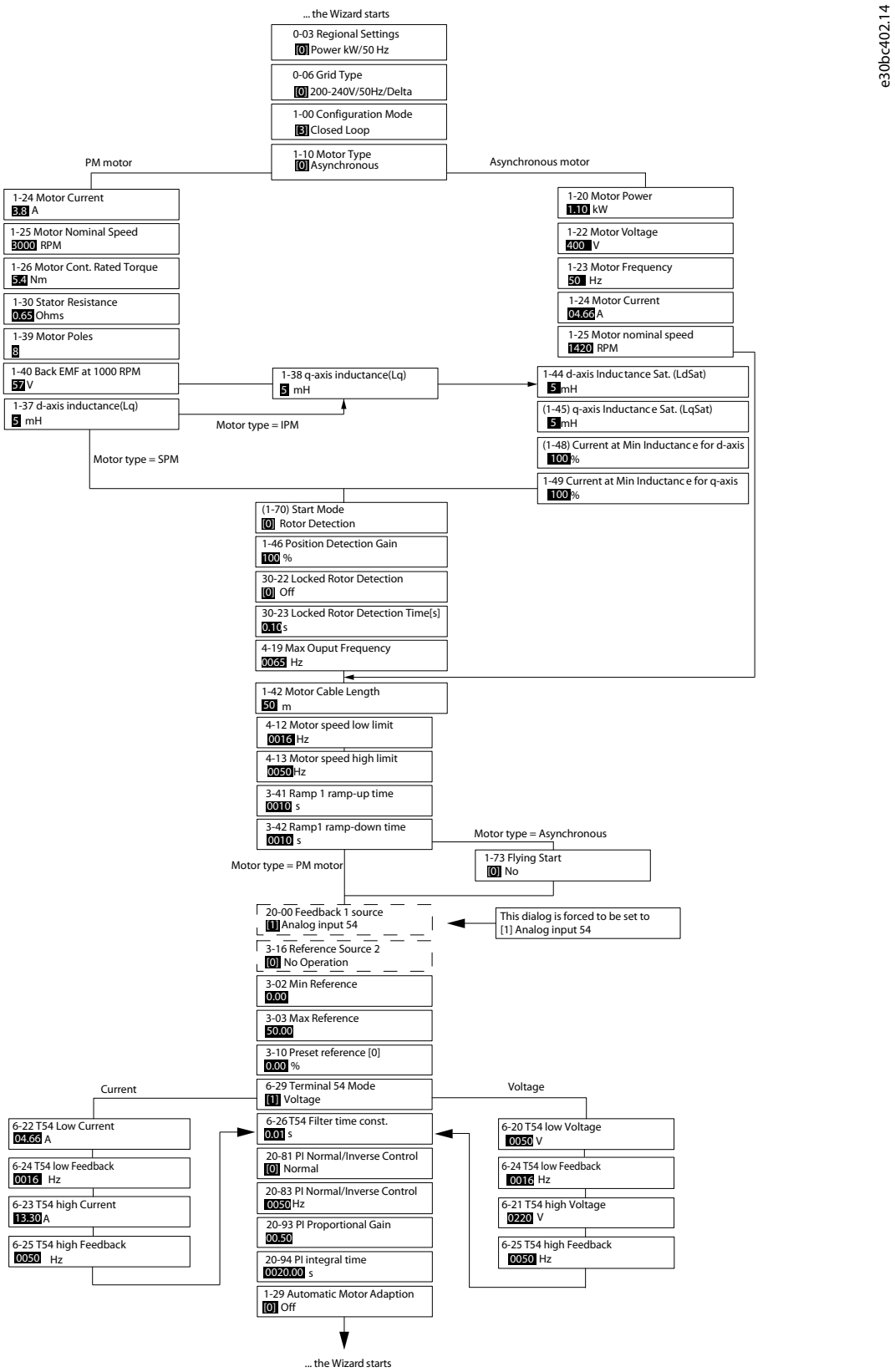

Illustration 30: Setup Wizard for Closed-loop Applications

Table 17: Setup Wizard for Closed-loop Applications

Parameter	Range	Default	Usage
Parameter 0-03 Regional Settings	*[0] International* *[1] US*	*[0] International*	–
Parameter 0-06 GridType	*[0] 200–240 V/50 Hz/IT-grid* *[1] 200–240 V/50 Hz/Delta* *[2] 200–240 V/50 Hz* *[10] 380–440 V/50 Hz/IT-grid* *[11] 380–440 V/50 Hz/Delta* *[12] 380–440 V/50 Hz* *[20] 440–480 V/50 Hz/IT-grid* *[21] 440–480 V/50 Hz/Delta* *[22] 440–480 V/50 Hz* *[30] 525–600 V/50 Hz/IT-grid* *[31] 525–600 V/50 Hz/Delta* *[32] 525–600 V/50 Hz* *[100] 200–240 V/60 Hz/IT-grid* *[101] 200–240 V/60 Hz/Delta* *[102] 200–240 V/60 Hz* *[110] 380–440 V/60 Hz/IT-grid* *[111] 380–440 V/60 Hz/Delta* *[112] 380–440 V/60 Hz* *[120] 440–480 V/60 Hz/IT-grid* *[121] 440–480 V/60 Hz/Delta* *[122] 440–480 V/60 Hz* *[130] 525–600 V/60 Hz/IT-grid* *[131] 525–600 V/60 Hz/Delta* *[132] 525–600 V/60 Hz*	Size selected	Select the operating mode for restart after reconnection of the drive to mains voltage after power down.

Parameter	Range	Default	Usage
Parameter 1-00 Configuration Mode	*[0] Open loop* *[3] Closed loop*	*[0] Open loop*	Select *[3] Closed loop*.

Parameter	Range	Default	Usage
Parameter 1-10 Motor Construction	**[0] Asynchron* *[1] PM, non-salient SPM* *[3] PM, salient IPM*	*[0] Asynchron*	Setting the parameter value might change these parameters: • *Parameter 1-01 Motor Control Principle.* • *Parameter 1-03 Torque Characteristics.* • *Parameter 1-08 Motor Control Bandwidth.* • *Parameter 1-14 Damping Gain.* • *Parameter 1-15 Low Speed Filter Time Const.* • *Parameter 1-16 High Speed Filter Time Const.* • *Parameter 1-17 Voltage Filter Time Const.* • *Parameter 1-20 Motor Power.* • *Parameter 1-22 Motor Voltage.* • *Parameter 1-23 Motor Frequency.* • *Parameter 1-24 Motor Current.* • *Parameter 1-25 Motor Nominal Speed.* • *Parameter 1-26 Motor Cont. Rated Torque.* • *Parameter 1-30 Stator Resistance (Rs).* • *Parameter 1-33 Stator Leakage Reactance (X1).* • *Parameter 1-35 Main Reactance (Xh).* • *Parameter 1-37 d-axis Inductance (Ld).* • *Parameter 1-38 q-axis Inductance (Lq).* • *Parameter 1-39 Motor Poles.* • *Parameter 1-40 Back EMF at 1000 RPM.* • *Parameter 1-44 d-axis Inductance Sat. (LdSat).* • *Parameter 1-45 q-axis Inductance Sat. (LqSat).* • *Parameter 1-46 Position Detection Gain.* • *Parameter 1-48 Current at Min Inductance for d-axis.* • *Parameter 1-49 Current at Min Inductance for q-axis.* • *Parameter 1-66 Min. Current at Low Speed.* • *Parameter 1-70 PM Start Mode.* • *Parameter 1-72 Start Function.* • *Parameter 1-73 Flying Start.* • *Parameter 1-80 Function at Stop.* • *Parameter 1-82 Min Speed for Function at Stop [Hz].* • *Parameter 1-90 Motor Thermal Protection.* • *Parameter 2-00 DC Hold/Motor Preheat Current.* • *Parameter 2-01 DC Brake Current.* • *Parameter 2-02 DC Braking Time.* • *Parameter 2-04 DC Brake Cut In Speed.* • *Parameter 2-10 Brake Function.* • *Parameter 4-14 Motor Speed High Limit [Hz].* • *Parameter 4-19 Max Output Frequency.* • *Parameter 4-58 Missing Motor Phase Function.* • *Parameter 14-65 Speed Derate Dead Time Compensation.*

Parameter	Range	Default	Usage
Parameter 1-20 Motor Power	*0.09–110 kW*	Size related	Enter the motor power from the nameplate data.
Parameter 1-22 Motor Voltage	*50–1000 V*	Size related	Enter the motor voltage from the nameplate data.
Parameter 1-23 Motor Frequency	*20–400 Hz*	Size related	Enter the motor frequency from the nameplate data.
Parameter 1-24 Motor Current	*0–10000 A*	Size related	Enter the motor current from the nameplate data.
Parameter 1-25 Motor Nominal Speed	*50–9999 RPM*	Size related	Enter the motor nominal speed from the nameplate data.
Parameter 1-26 Motor Cont. Rated Torque	*0.1–1000.0 Nm*	Size related	This parameter is available when *parameter 1-10 Motor Construction* is set to options that enable permanent motor mode. **NOTICE** Changing this parameter affects the settings of other parameters.
Parameter 1-29 Automatic Motor Adaption (AMA)	–	*Off*	Performing an AMA optimizes motor performance.
Parameter 1-30 Stator Resistance (Rs)	*0–99.990 Ω*	Size related	Set the stator resistance value.
Parameter 1-37 d-axis Inductance (Ld)	*0.000–1000.000 mH*	Size related	Enter the value of the d-axis inductance. Obtain the value from the permanent magnet motor datasheet.
Parameter 1-38 q-axis Inductance (Lq)	*0.000–1000.000 mH*	Size related	Enter the value of the q-axis inductance.
Parameter 1-39 Motor Poles	*2–100*	*4*	Enter the number of motor poles.
Parameter 1-40 Back EMF at 1000 RPM	*10–9000 V*	Size related	Line-line RMS back EMF voltage at 1000 RPM.
Parameter 1-42 Motor Cable Length	*0–100 m*	*50 m*	Enter the motor cable length.
Parameter 1-44 d-axis Inductance Sat. (LdSat)	*0.000–1000.000 mH*	Size related	This parameter corresponds to the inductance saturation of Ld. Ideally, this parameter has the same value as *parameter 1-37 d-axis Inductance (Ld)*. However, if the motor supplier provides an induction curve, enter the induction value, which is 200% of the nominal current.

Parameter	Range	Default	Usage
Parameter 1-45 q-axis Inductance Sat. (LqSat)	*0.000–1000.000 mH*	Size related	This parameter corresponds to the inductance saturation of Lq. Ideally, this parameter has the same value as *parameter 1-38 q-axis Inductance (Lq)*. However, if the motor supplier provides an induction curve, enter the induction value, which is 200% of the nominal current.
Parameter 1-46 Position Detection Gain	*20–200%*	*100%*	Adjusts the height of the test pulse during position detection at start.
Parameter 1-48 Current at Min Inductance for d-axis	*20–200%*	*100%*	Enter the inductance saturation point.
Parameter 1-49 Current at Min Inductance for q-axis	*20–200%*	*100%*	This parameter specifies the saturation curve of the d- and q-inductance values. From 20–100% of this parameter, the inductances are linearly approximated due to *parameter 1-37 d-axis Inductance (Ld)*, *parameter 1-38 q-axis Inductance (Lq)*, *parameter 1-44 d-axis Inductance Sat. (LdSat)*, and *parameter 1-45 q-axis Inductance Sat. (LqSat)*.
Parameter 1-70 PM Start Mode	*[0] Rotor Detection* *[1] Parking*	*[0] Rotor Detection*	Select the PM motor start mode.
Parameter 1-73 Flying Start	*[0] Disabled* *[1] Enabled*	*[0] Disabled*	Select *[1] Enabled* to enable the drive to catch a spinning motor in, for example, fan applications. When PM is selected, this parameter is enabled.
Parameter 3-02 Minimum Reference	*-4999.000–4999.000*	*0*	The minimum reference is the lowest value obtainable by summing all references.
Parameter 3-03 Maximum Reference	*-4999.000–4999.000*	*50*	The maximum reference is the highest value obtainable by summing all references.
Parameter 3-10 Preset Reference	*-100–100%*	*0*	Enter the setpoint.
Parameter 3-41 Ramp 1 Ramp Up Time	*0.05–3600.0 s*	Size related	Ramp-up time from 0 to rated *parameter 1-23 Motor Frequency* for asynchronous motors. Ramp-up time from 0 to *parameter 1-25 Motor Nominal Speed* for PM motors.
Parameter 3-42 Ramp 1 Ramp Down Time	*0.05–3600.0 s*	Size related	Ramp-down time from rated *parameter 1-23 Motor Frequency* to 0 for asynchronous motors. Ramp-down time from *parameter 1-25 Motor Nominal Speed* to 0 for PM motors.
Parameter 4-12 Motor Speed Low Limit [Hz]	*0.0–400.0 Hz*	*0.0 Hz*	Enter the minimum limit for low speed.
Parameter 4-14 Motor Speed High Limit [Hz]	*0.0–400.0 Hz*	*100 Hz*	Enter the minimum limit for high speed.

Parameter	Range	Default	Usage
Parameter 4-19 Max Output Frequency	*0.0–400.0 Hz*	*100 Hz*	Enter the maximum output frequency value. If *parameter 4-19 Max Output Frequency* is set lower than *parameter 4-14 Motor Speed High Limit [Hz]*, *parameter 4-14 Motor Speed High Limit [Hz]* is set equal to *parameter 4-19 Max Output Frequency* automatically.
Parameter 6-20 Terminal 54 Low Voltage	*0.00–10.00 V*	*0.07 V*	Enter the voltage that corresponds to the low reference value.
Parameter 6-21 Terminal 54 High Voltage	*0.00–10.00 V*	*10.00 V*	Enter the voltage that corresponds to the high reference value.
Parameter 6-22 Terminal 54 Low Current	*0.00–20.00 mA*	*4.00 mA*	Enter the current that corresponds to the low reference value.
Parameter 6-23 Terminal 54 High Current	*0.00–20.00 mA*	*20.00 mA*	Enter the current that corresponds to the high reference value.
Parameter 6-24 Terminal 54 Low Ref./Feedb. Value	*-4999–4999*	*0*	Enter the feedback value that corresponds to the voltage or current set in *parameter 6-20 Terminal 54 Low Voltage/parameter 6-22 Terminal 54 Low Current*.
Parameter 6-25 Terminal 54 High Ref./ Feedb. Value	*-4999–4999*	*50*	Enter the feedback value that corresponds to the voltage or current set in *parameter 6-21 Terminal 54 High Voltage/parameter 6-23 Terminal 54 High Current*.
Parameter 6-26 Terminal 54 Filter Time Constant	*0.00–10.00 s*	*0.01*	Enter the filter time constant.
Parameter 6-29 Terminal 54 mode	*[0] Current* *[1] Voltage*	*[1] Voltage*	Select if terminal 54 is used for current or voltage input.
Parameter 20-81 PI Normal/Inverse Control	*[0] Normal* *[1] Inverse*	*[0] Normal*	Select *[0] Normal* to set the process control to increase the output speed when the process error is positive. Select *[1] Inverse* to reduce the output speed.
Parameter 20-83 PI Start Speed [Hz]	*0–200 Hz*	*0 Hz*	Enter the motor speed to be attained as a start signal for commencement of PI control.
Parameter 20-93 PI Proportional Gain	*0.00–10.00*	*0.01*	Enter the process controller proportional gain. Quick control is obtained at high amplification. However, if amplification is too high, the process may become unstable.
Parameter 20-94 PI Integral Time	*0.1–999.0 s*	*999.0 s*	Enter the process controller integral time. Obtain quick control through a short integral time, though if the integral time is too short, the process becomes unstable. An excessively long integral time disables the integral action.

Parameter	Range	Default	Usage
Parameter 30-22 Locked Rotor Detection	*[0] Off* *[1] On*	*[0] Off*	–
Parameter 30-23 Locked Rotor Detection Time [s]	*0.05–1.00 s*	*0.10 s*	–

4.2.4 Motor Setup

The motor setup wizard guides users through the needed motor parameters.

Table 18: Motor Setup Wizard Settings

Parameter	Range	Default	Usage
Parameter 0-03 Regional Settings	*[0] International* *[1] US*	*[0] International*	–

Parameter	Range	Default	Usage
Parameter 0-06 GridType	*[0] 200–240 V/50 Hz/IT-grid* *[1] 200–240 V/50 Hz/Delta* *[2] 200–240 V/50 Hz* *[10] 380–440 V/50 Hz/IT-grid* *[11] 380–440 V/50 Hz/Delta* *[12] 380–440 V/50 Hz* *[20] 440–480 V/50 Hz/IT-grid* *[21] 440–480 V/50 Hz/Delta* *[22] 440–480 V/50 Hz* *[30] 525–600 V/50 Hz/IT-grid* *[31] 525–600 V/50 Hz/Delta* *[32] 525–600 V/50 Hz* *[100] 200–240 V/60 Hz/IT-grid* *[101] 200–240 V/60 Hz/Delta* *[102] 200–240 V/60 Hz* *[110] 380–440 V/60 Hz/IT-grid* *[111] 380–440 V/60 Hz/Delta* *[112] 380–440 V/60 Hz* *[120] 440–480 V/60 Hz/IT-grid* *[121] 440–480 V/60 Hz/Delta* *[122] 440–480 V/60 Hz* *[130] 525–600 V/60 Hz/IT-grid* *[131] 525–600 V/60 Hz/Delta* *[132] 525–600 V/60 Hz*	Size selected	Select the operating mode for restart after reconnection of the drive to mains voltage after power down.

Parameter	Range	Default	Usage
Parameter 1-10 Motor Construction	**[0] Asynchron* *[1] PM, non-salient SPM* *[3] PM, salient IPM*	*[0] Asynchron*	Setting the parameter value might change these parameters: • *Parameter 1-01 Motor Control Principle.* • *Parameter 1-03 Torque Characteristics.* • *Parameter 1-08 Motor Control Bandwidth.* • *Parameter 1-14 Damping Gain.* • *Parameter 1-15 Low Speed Filter Time Const.* • *Parameter 1-16 High Speed Filter Time Const.* • *Parameter 1-17 Voltage Filter Time Const.* • *Parameter 1-20 Motor Power.* • *Parameter 1-22 Motor Voltage.* • *Parameter 1-23 Motor Frequency.* • *Parameter 1-24 Motor Current.* • *Parameter 1-25 Motor Nominal Speed.* • *Parameter 1-26 Motor Cont. Rated Torque.* • *Parameter 1-30 Stator Resistance (Rs).* • *Parameter 1-33 Stator Leakage Reactance (X1).* • *Parameter 1-35 Main Reactance (Xh).* • *Parameter 1-37 d-axis Inductance (Ld).* • *Parameter 1-38 q-axis Inductance (Lq).* • *Parameter 1-39 Motor Poles.* • *Parameter 1-40 Back EMF at 1000 RPM.* • *Parameter 1-44 d-axis Inductance Sat. (LdSat).* • *Parameter 1-45 q-axis Inductance Sat. (LqSat).* • *Parameter 1-46 Position Detection Gain.* • *Parameter 1-48 Current at Min Inductance for d-axis.* • *Parameter 1-49 Current at Min Inductance for q-axis.* • *Parameter 1-66 Min. Current at Low Speed.* • *Parameter 1-70 PM Start Mode.* • *Parameter 1-72 Start Function.* • *Parameter 1-73 Flying Start.* • *Parameter 1-80 Function at Stop.* • *Parameter 1-82 Min Speed for Function at Stop [Hz].* • *Parameter 1-90 Motor Thermal Protection.* • *Parameter 2-00 DC Hold/Motor Preheat Current.* • *Parameter 2-01 DC Brake Current.* • *Parameter 2-02 DC Braking Time.* • *Parameter 2-04 DC Brake Cut In Speed.* • *Parameter 2-10 Brake Function.* • *Parameter 4-14 Motor Speed High Limit [Hz].* • *Parameter 4-19 Max Output Frequency.* • *Parameter 4-58 Missing Motor Phase Function.* • *Parameter 14-65 Speed Derate Dead Time Compensation.*

Parameter	Range	Default	Usage
Parameter 1-20 Motor Power	*0.12–110 kW/0.16–150 hp*	Size related	Enter the motor power from the nameplate data.
Parameter 1-22 Motor Voltage	*50–1000 V*	Size related	Enter the motor voltage from the nameplate data.
Parameter 1-23 Motor Frequency	*20–400 Hz*	Size related	Enter the motor frequency from the nameplate data.
Parameter 1-24 Motor Current	*0.01–10000.00 A*	Size related	Enter the motor current from the nameplate data.
Parameter 1-25 Motor Nominal Speed	*50–9999 RPM*	Size related	Enter the motor nominal speed from the nameplate data.
Parameter 1-26 Motor Cont. Rated Torque	*0.1–1000.0 Nm*	Size related	This parameter is available when *parameter 1-10 Motor Construction* is set to options that enable permanent motor mode. **NOTICE** Changing this parameter affects the settings of other parameters.
Parameter 1-30 Stator Resistance (Rs)	*0–99.990 Ω*	Size related	Set the stator resistance value.
Parameter 1-37 d-axis Inductance (Ld)	*0.000–1000.000 mH*	Size related	Enter the value of the d-axis inductance. Obtain the value from the permanent magnet motor datasheet.
Parameter 1-38 q-axis Inductance (Lq)	*0.000–1000.000 mH*	Size related	Enter the value of the q-axis inductance.
Parameter 1-39 Motor Poles	*2–100*	*4*	Enter the number of motor poles.
Parameter 1-40 Back EMF at 1000 RPM	*10–9000 V*	Size related	Line-line RMS back EMF voltage at 1000 RPM.
Parameter 1-42 Motor Cable Length	*0–100 m*	*50 m*	Enter the motor cable length.
Parameter 1-44 d-axis Inductance Sat. (LdSat)	*0.000–1000.000 mH*	Size related	This parameter corresponds to the inductance saturation of Ld. Ideally, this parameter has the same value as *parameter 1-37 d-axis Inductance (Ld)*. However, if the motor supplier provides an induction curve, enter the induction value, which is 200% of the nominal current.

Parameter	Range	Default	Usage
Parameter 1-45 q-axis Inductance Sat. (LqSat)	*0.000–1000.000 mH*	Size related	This parameter corresponds to the inductance saturation of Lq. Ideally, this parameter has the same value as *parameter 1-38 q-axis Inductance (Lq)*. However, if the motor supplier provides an induction curve, enter the induction value, which is 200% of the nominal current.
Parameter 1-46 Position Detection Gain	*20–200%*	*100%*	Adjusts the height of the test pulse during position detection at start.
Parameter 1-48 Current at Min Inductance for d-axis	*20–200%*	*100%*	Enter the inductance saturation point.
Parameter 1-49 Current at Min Inductance for q-axis	*20–200%*	*100%*	This parameter specifies the saturation curve of the d- and q-inductance values. From 20–100% of this parameter, the inductances are linearly approximated due to *parameter 1-37 d-axis Inductance (Ld)*, *parameter 1-38 q-axis Inductance (Lq)*, *parameter 1-44 d-axis Inductance Sat. (LdSat)*, and *parameter 1-45 q-axis Inductance Sat. (LqSat)*.
Parameter 1-70 PM Start Mode	*[0] Rotor Detection* *[1] Parking*	*[0] Rotor Detection*	Select the PM motor start mode.
Parameter 1-73 Flying Start	*[0] Disabled* *[1] Enabled*	*[0] Disabled*	Select *[1] Enabled* to enable the drive to catch a spinning motor.
Parameter 3-41 Ramp 1 Ramp Up Time	*0.05–3600.0 s*	Size related	Ramp-up time from 0 to rated *parameter 1-23 Motor Frequency*.
Parameter 3-42 Ramp 1 Ramp Down Time	*0.05–3600.0 s*	Size related	Ramp-down time from rated *parameter 1-23 Motor Frequency* to 0.
Parameter 4-12 Motor Speed Low Limit [Hz]	*0.0–400.0 Hz*	*0.0 Hz*	Enter the minimum limit for low speed.
Parameter 4-14 Motor Speed High Limit [Hz]	*0.0–400.0 Hz*	*100.0 Hz*	Enter the maximum limit for high speed.
Parameter 4-19 Max Output Frequency	*0.0–400.0 Hz*	*100.0 Hz*	Enter the maximum output frequency value. If *parameter 4-19 Max Output Frequency* is set lower than *parameter 4-14 Motor Speed High Limit [Hz]*, *parameter 4-14 Motor Speed High Limit [Hz]* is set equal to *parameter 4-19 Max Output Frequency* automatically.
Parameter 30-22 Locked Rotor Detection	*[0] Off* *[1] On*	*[0] Off*	–
Parameter 30-23 Locked Rotor Detection Time [s]	*0.05–1.00 s*	*0.10 s*	–

4.2.5 Changes Made Function

The changes made function lists all parameters changed from default settings.

- The list shows only parameters that have been changed in the current edit setup.
- Parameters that have been reset to default values are not listed.
- The message *Empty* indicates that no parameters have been changed.

4.2.6 Changing Parameter Settings

Procedure

1. To enter the Quick Menu, press the [Menu] key until the indicator in the display is placed above Quick Menu.
2. Press [▵] [▿] to select the wizard, closed-loop setup, motor setup, or changes made.
3. Press [OK].
4. Press [▵] [▿] to browse through the parameters in the Quick Menu.
5. Press [OK] to select a parameter.
6. Press [▵] [▿] to change the value of a parameter setting.
7. Press [OK] to accept the change.
8. Press either [Back] twice to enter Status, or press [Menu] once to enter the Main Menu.

4.2.7 Accessing All Parameters via the Main Menu

Procedure

1. Press the [Menu] key until the indicator in the display is placed above Main Menu.
2. Press [▵] [▿] to browse through the parameter groups.
3. Press [OK] to select a parameter group.
4. Press [▵] [▿] to browse through the parameters in the specific group.
5. Press [OK] to select the parameter.
6. Press [▵] [▿] to set/change the parameter value.
7. Press [OK] to accept the change.

4.3 Parameter List

0-**	**Operation / Display**
0-0*	**Basic Settings**
0-01	Language
0-03	Regional Settings
0-04	Operating State at Power-up
0-06	GridType
0-07	Auto DC Braking
0-1*	**Set-up Operations**
0-10	Active Set-up
0-11	Programming Set-up
0-12	Link Setups
0-3*	**LCP Custom Readout**
0-30	Custom Readout Unit
0-31	Custom Readout Min Value
0-32	Custom Readout Max Value
0-37	Display Text 1
0-38	Display Text 2
0-39	Display Text 3
0-4*	**LCP Keypad**
0-40	[Hand on] Key on LCP
0-42	[Auto on] Key on LCP
0-44	[Off/Reset] Key on LCP
0-5*	**Copy/Save**
0-50	LCP Copy
0-51	Set-up Copy
0-6*	**Password**
0-60	Main Menu Password
0-61	Access to Main Menu w/o Password
1-**	**Load and Motor**
1-0*	**General Settings**
1-00	Configuration Mode
1-01	Motor Control Principle
1-03	Torque Characteristics
1-06	Clockwise Direction
1-08	Motor Control Bandwidth
1-1*	**Motor Selection**
1-10	Motor Construction
1-14	Damping Gain
1-15	Low Speed Filter Time Const.
1-16	High Speed Filter Time Const.
1-17	Voltage filter time const.
1-2*	**Motor Data**
1-20	Motor Power
1-22	Motor Voltage
1-23	Motor Frequency
1-24	Motor Current
1-25	Motor Nominal Speed
1-26	Motor Cont. Rated Torque
1-29	Automatic Motor Adaption (AMA)
1-3*	**Adv. Motor Data**
1-30	Stator Resistance (Rs)
1-31	Rotor Resistance (Rr)
1-33	Stator Leakage Reactance (X1)
1-35	Main Reactance (Xh)
1-37	d-axis Inductance (Ld)
1-38	q-axis Inductance (Lq)
1-39	Motor Poles
1-4*	**Adv. Motor Data II**
1-40	Back EMF at 1000 RPM
1-42	Motor Cable Length
1-43	Motor Cable Length Feet
1-44	d-axis Inductance Sat. (LdSat)
1-45	q-axis Inductance Sat. (LqSat)
1-46	Position Detection Gain
1-48	Current at Min Inductance for d-axis
1-49	Current at Min Inductance for q-axis
1-5*	**Load Indep. Setting**
1-50	Motor Magnetisation at Zero Speed
1-52	Min Speed Normal Magnetising [Hz]
1-55	U/f Characteristic - U
1-56	U/f Characteristic - F
1-6*	**Load Depen. Setting**
1-60	Low Speed Load Compensation
1-61	High Speed Load Compensation
1-62	Slip Compensation
1-63	Slip Compensation Time Constant
1-64	Resonance Dampening
1-65	Resonance Dampening Time Constant
1-66	Min. Current at Low Speed
1-7*	**Start Adjustments**
1-70	Start Mode
1-71	Start Delay
1-72	Start Function
1-73	Flying Start
1-8*	**Stop Adjustments**
1-80	Function at Stop
1-82	Min Speed for Function at Stop [Hz]
1-88	AC Brake Gain
1-9*	**Motor Temperature**
1-90	Motor Thermal Protection
1-93	Thermistor Source
2-**	**Brakes**
2-0*	**DC-Brake**
2-00	DC Hold/Motor Preheat Current
2-01	DC Brake Current
2-02	DC Braking Time
2-04	DC Brake Cut In Speed
2-06	Parking Current
2-07	Parking Time
2-1*	**Brake Energy Funct.**
2-10	Brake Function
2-16	AC Brake, Max current
2-17	Over-voltage Control
2-19	Over-voltage Gain
3-**	**Reference / Ramps**
3-0*	**Reference Limits**
3-02	Minimum Reference
3-03	Maximum Reference
3-1*	**References**
3-10	Preset Reference
3-11	Jog Speed [Hz]
3-14	Preset Relative Reference
3-15	Reference 1 Source
3-16	Reference 2 Source
3-17	Reference 3 Source
3-4*	**Ramp 1**
3-41	Ramp 1 Ramp Up Time
3-42	Ramp 1 Ramp Down Time
3-5*	**Ramp 2**
3-51	Ramp 2 Ramp Up Time
3-52	Ramp 2 Ramp Down Time
3-8*	**Other Ramps**
3-80	Jog Ramp Time
3-81	Quick Stop Ramp Time
4-**	**Limits / Warnings**
4-1*	**Motor Limits**
4-10	Motor Speed Direction
4-12	Motor Speed Low Limit [Hz]
4-14	Motor Speed High Limit [Hz]
4-18	Current Limit
4-19	Max Output Frequency
4-4*	**Adj. Warnings 2**
4-40	Warning Freq. Low
4-41	Warning Freq. High
4-5*	**Adj. Warnings**
4-50	Warning Current Low
4-51	Warning Current High
4-54	Warning Reference Low
4-55	Warning Reference High
4-56	Warning Feedback Low
4-57	Warning Feedback High
4-58	Missing Motor Phase Function
4-6*	**Speed Bypass**
4-61	Bypass Speed From [Hz]
4-63	Bypass Speed To [Hz]
4-64	Semi-Auto Bypass Set-up
5-**	**Digital In/Out**
5-0*	**Digital I/O mode**
5-00	Digital Input Mode
5-03	Digital Input 29 Mode
5-1*	**Digital Inputs**
5-10	Terminal 18 Digital Input
5-11	Terminal 19 Digital Input
5-12	Terminal 27 Digital Input
5-13	Terminal 29 Digital Input
5-3*	**Digital Outputs**
5-34	On Delay, Digital Output
5-35	Off Delay, Digital Output
5-4*	**Relays**
5-40	Function Relay
5-41	On Delay, Relay
5-42	Off Delay, Relay
5-5*	**Pulse Input**
5-50	Term. 29 Low Frequency
5-51	Term. 29 High Frequency
5-52	Term. 29 Low Ref./Feedb. Value
5-53	Term. 29 High Ref./Feedb. Value
5-9*	**Bus Controlled**
5-90	Digital & Relay Bus Control
6-**	**Analog In/Out**
6-0*	**Analog I/O Mode**
6-00	Live Zero Timeout Time
6-01	Live Zero Timeout Function
6-02	Fire Mode Live Zero Timeout Function
6-1*	**Analog Input 53**
6-10	Terminal 53 Low Voltage
6-11	Terminal 53 High Voltage
6-12	Terminal 53 Low Current
6-13	Terminal 53 High Current
6-14	Terminal 53 Low Ref./Feedb. Value
6-15	Terminal 53 High Ref./Feedb. Value
6-16	Terminal 53 Filter Time Constant
6-19	Terminal 53 mode
6-2*	**Analog Input 54**
6-20	Terminal 54 Low Voltage
6-21	Terminal 54 High Voltage
6-22	Terminal 54 Low Current
6-23	Terminal 54 High Current
6-24	Terminal 54 Low Ref./Feedb. Value
6-25	Terminal 54 High Ref./Feedb. Value
6-26	Terminal 54 Filter Time Constant
6-29	Terminal 54 mode
6-7*	**Analog/Digital Output 45**
6-70	Terminal 45 Mode
6-71	Terminal 45 Analog Output
6-72	Terminal 45 Digital Output
6-73	Terminal 45 Output Min Scale
6-74	Terminal 45 Output Max Scale
6-76	Terminal 45 Output Bus Control
6-9*	**Analog/Digital Output 42**
6-90	Terminal 42 Mode
6-91	Terminal 42 Analog Output
6-92	Terminal 42 Digital Output
6-93	Terminal 42 Output Min Scale
6-94	Terminal 42 Output Max Scale
6-96	Terminal 42 Output Bus Control
6-98	Drive Type
8-**	**Comm. and Options**
8-0*	**General Settings**
8-01	Control Site
8-02	Control Source
8-03	Control Timeout Time
8-04	Control Timeout Function
8-3*	**FC Port Settings**
8-30	Protocol
8-31	Address
8-32	Baud Rate
8-33	Parity / Stop Bits
8-35	Minimum Response Delay
8-36	Maximum Response Delay
8-37	Maximum Inter-char delay
8-4*	**FC MC protocol set**
8-42	PCD Write Configuration
8-43	PCD Read Configuration
8-5*	**Digital/Bus**
8-50	Coasting Select
8-51	Quick Stop Select
8-52	DC Brake Select
8-53	Start Select
8-54	Reversing Select
8-55	Set-up Select
8-56	Preset Reference Select
8-7*	**BACnet**
8-70	BACnet Device Instance
8-72	MS/TP Max Masters
8-73	MS/TP Max Info Frames
8-74	"I am" Service
8-75	Intialisation Password
8-79	Protocol Firmware version
8-8*	**FC Port Diagnostics**
8-80	Bus Message Count
8-81	Bus Error Count
8-82	Slave Messages Rcvd
8-83	Slave Error Count
8-84	Slave Messages Sent
8-85	Slave Timeout Errors
8-88	Reset FC port Diagnostics
8-9*	**Bus Feedback**
8-94	Bus Feedback 1
8-95	Bus Feedback 2
13-**	**Smart Logic**
13-0*	**SLC Settings**
13-00	SL Controller Mode
13-01	Start Event
13-02	Stop Event
13-03	Reset SLC
13-1*	**Comparators**
13-10	Comparator Operand
13-11	Comparator Operator
13-12	Comparator Value
13-2*	**Timers**
13-20	SL Controller Timer
13-4*	**Logic Rules**
13-40	Logic Rule Boolean 1
13-41	Logic Rule Operator 1
13-42	Logic Rule Boolean 2
13-43	Logic Rule Operator 2
13-44	Logic Rule Boolean 3
13-5*	**States**
13-51	SL Controller Event
13-52	SL Controller Action
14-**	**Special Functions**
14-0*	**Inverter Switching**
14-01	Switching Frequency
14-03	Overmodulation
14-07	Dead Time Compensation Level
14-08	Damping Gain Factor
14-09	Dead Time Bias Current Level
14-1*	**Mains Failure**
14-10	Mains Failure
14-11	Mains Fault Voltage Level
14-12	Response to Mains Imbalance
14-15	Kin. Back-up Trip Recovery Level
14-2*	**Reset Functions**
14-20	Reset Mode
14-21	Automatic Restart Time
14-22	Operation Mode
14-23	Typecode Setting
14-27	Action At Inverter Fault
14-28	Production Settings
14-29	Service Code
14-3*	**Current Limit Ctrl.**
14-30	Current Lim Ctrl, Proportional Gain
14-31	Current Lim Ctrl, Integration Time
14-32	Current Lim Ctrl, Filter Time

e30bu689.10

14-4*	**Energy Optimising**
14-40	VT Level
14-41	AEO Minimum Magnetisation
14-44	d-axis current optimization for IPM
14-5*	**Environment**
14-50	RFI Filter
14-51	DC-Link Voltage Compensation
14-52	Fan Control
14-53	Fan Monitor
14-55	Output Filter
14-6*	**Auto Derate**
14-61	Function at Inverter Overload
14-63	Min Switch Frequency
14-64	Dead Time Compensation Zero Current Level
14-65	Speed Derate Dead Time Compensation
14-9*	**Fault Settings**
14-90	Fault Level
15-**	**Drive Information**
15-0*	**Operating Data**
15-00	Operating hours
15-01	Running Hours
15-02	kWh Counter
15-03	Power Up's
15-04	Over Temp's
15-05	Over Volt's
15-06	Reset kWh Counter
15-07	Reset Running Hours Counter
15-3*	**Alarm Log**
15-30	Alarm Log: Error Code
15-31	InternalFaultReason
15-32	Alarm Log: Time
15-4*	**Drive Identification**
15-40	FC Type
15-41	Power Section
15-42	Voltage
15-43	Software Version
15-44	Ordered TypeCode
15-45	Actual Typecode String
15-46	Drive Ordering No
15-48	LCP Id No
15-49	SW ID Control Card
15-50	SW ID Power Card
15-51	Drive Serial Number
15-52	OEM Information
15-53	Power Card Serial Number
15-57	File Version
15-59	Filename
15-9*	**Parameter Info**
15-92	Defined Parameters
15-97	Application Type
15-98	Drive Identification
16-**	**Data Readouts**
16-0*	**General Status**
16-00	Control Word
16-01	Reference [Unit]
16-02	Reference [%]
16-03	Status Word
16-05	Main Actual Value [%]
16-09	Custom Readout
16-1*	**Motor Status**
16-10	Power [kW]
16-11	Power [hp]
16-12	Motor Voltage
16-13	Frequency
16-14	Motor current
16-15	Frequency [%]
16-16	Torque [Nm]
16-17	Speed [RPM]
16-18	Motor Thermal
16-22	Torque [%]
16-26	Power Filtered [kW]
16-27	Power Filtered [hp]
16-3*	**Drive Status**
16-30	DC Link Voltage
16-34	Heatsink Temp.
16-35	Inverter Thermal
16-36	Inv. Nom. Current
16-37	Inv. Max. Current
16-38	SL Controller State
16-5*	**Ref. & Feedb.**
16-50	External Reference
16-52	Feedback[Unit]
16-54	Feedback 1 [Unit]
16-55	Feedback 2 [Unit]
16-6*	**Inputs & Outputs**
16-60	Digital Input
16-61	Terminal 53 Setting
16-62	Analog input 53
16-63	Terminal 54 Setting
16-64	Analog input 54
16-65	Analog output 42 [mA]
16-66	Digital Output
16-67	Pulse input 29 [Hz]
16-71	Relay output
16-72	Counter A
16-73	Counter B
16-79	Analog output 45 [mA]
16-8*	**Fieldbus & FC Port**
16-86	FC Port REF 1
16-9*	**Diagnosis Readouts**
16-90	Alarm Word
16-91	Alarm Word 2
16-92	Warning Word
16-93	Warning Word 2
16-94	Ext. Status Word
16-95	Ext. Status Word 2
16-97	Alarm Word 3
16-98	Warning Word 3
18-**	**Info & Readouts**
18-1*	**Fire Mode Log**
18-10	FireMode Log:Event
18-5*	**Ref. & Feedb.**
18-50	Sensorless Readout [unit]
20-**	**Drive Closed Loop**
20-0*	**Feedback**
20-00	Feedback 1 Source
20-01	Feedback 1 Conversion
20-03	Feedback 2 Source
20-04	Feedback 2 Conversion
20-12	Reference/Feedback Unit
20-2*	**Feedback/Setpoint**
20-20	Feedback Function
20-21	Setpoint 1
20-6*	**Sensorless**
20-60	Sensorless Unit
20-69	Sensorless Information
20-8*	**PI Basic Settings**
20-81	PI Normal/ Inverse Control
20-83	PI Start Speed [Hz]
20-84	On Reference Bandwidth
20-9*	**PI Controller**
20-91	PI Anti Windup
20-93	PI Proportional Gain
20-94	PI Integral Time
20-97	PI Feed Forward Factor
22-**	**Appl. Functions**
22-0*	**Miscellaneous**
22-01	Power Filter Time
22-02	Sleepmode CL Control Mode
22-2*	**No-Flow Detection**
22-23	No-Flow Function
22-24	No-Flow Delay
22-3*	**No-Flow Power Tuning**
22-30	No-Flow Power
22-31	Power Correction Factor
22-33	Low Speed [Hz]
22-34	Low Speed Power [kW]
22-37	High Speed [Hz]
22-38	High Speed Power [kW]
22-4*	**Sleep Mode**
22-40	Minimum Run Time
22-41	Minimum Sleep Time
22-43	Wake-Up Speed [Hz]
22-44	Wake-Up Ref./FB Diff
22-45	Setpoint Boost
22-46	Maximum Boost Time
22-47	Sleep Speed [Hz]
22-48	Sleep Delay Time
22-49	Wake-Up Delay Time
22-6*	**Broken Belt Detection**
22-60	Broken Belt Function
22-61	Broken Belt Torque
22-62	Broken Belt Delay
22-8*	**Flow Compensation**
22-80	Flow Compensation
22-81	Square-linear Curve Approximation
22-82	Work Point Calculation
22-84	Speed at No-Flow [Hz]
22-86	Speed at Design Point [Hz]
22-87	Pressure at No-Flow Speed
22-88	Pressure at Rated Speed
22-89	Flow at Design Point
22-90	Flow at Rated Speed
24-**	**Appl. Functions 2**
24-0*	**Fire Mode**
24-00	FM Function
24-01	Fire Mode Configuration
24-03	Fire Mode Min Reference
24-04	Fire Mode Max Reference
24-05	FM Preset Reference
24-06	Fire Mode Reference Source
24-07	Fire Mode Feedback Source
24-08	Mul FM Preset Reference
24-09	FM Alarm Handling
24-1*	**Drive Bypass**
24-10	Drive Bypass Function
24-11	Drive Bypass Delay Time
30-**	**Special Features**
30-2*	**Adv. Start Adjust**
30-22	Locked Rotor Protection
30-23	Locked Rotor Detection Time [s]
30-5*	**Unit Configuration**
30-58	LockPassword

e30bu690.10

5 Warnings and Alarms

5.1 List of Warnings and Alarms

Table 19: Warnings and Alarms

Fault number	Alarm/ warning bit number	Fault text	Warning	Alarm	Trip locked	Cause of problem
2	16	Live zero error	X	X	–	Signal on terminal 53 or 54 is less than 50% of the value set in *parameter 6-10 Terminal 53 Low Voltage*, *parameter 6-12 Terminal 53 Low Current*, *parameter 6-20 Terminal 54 Low Voltage*, or *parameter 6-22 Terminal 54 Low Current*. See also *parameter group 6-0* Analog I/O Mode*.
4	14	Mains ph. loss	X	X	X	Missing phase on the supply side or too high voltage imbalance. Check the supply voltage. See *parameter 14-12 Function at Mains Imbalance*.
7	11	DC over volt	X	X	–	DC-link voltage exceeds the limit.
8	10	DC under volt	X	X	–	DC-link voltage drops below voltage warning low-limit.
9	9	Inverter overload	X	X	–	More than 100% load for a long time.
10	8	Motor ETR over	X	X	–	Motor is too hot due to more than 100% load for a long time. See *parameter 1-90 Motor Thermal Protection*.
11	7	Motor th over	X	X	–	Thermistor or thermistor connection is disconnected. See *parameter 1-90 Motor Thermal Protection*.
13	5	Over Current	X	X	X	Inverter peak current limit is exceeded.
14	2	Earth Fault	–	X	X	Discharge from output phases to ground.
16	12	Short Circuit	–	X	X	Short circuit in motor or on motor terminals.
17	4	Ctrl. word TO	X	X	–	No communication to drive. See *parameter group 8-0* General Settings*.
24	50	Fan Fault	X	X	–	The heat sink cooling fan is not working (only on 400 V, 30–90 kW units).
30	19	U phase loss	–	X	X	Motor phase U is missing. Check the phase. See *parameter 4-58 Missing Motor Phase Function*.
31	20	V phase loss	–	X	X	Motor phase V is missing. Check the phase. See *parameter 4-58 Missing Motor Phase Function*.
32	21	W phase loss	–	X	X	Motor phase W is missing. Check the phase. See *parameter 4-58 Missing Motor Phase Function*.
38	17	Internal fault	–	X	X	Contact the local Danfoss supplier.
44	28	Earth Fault	–	X	X	Discharge from output phases to ground, using the value of *parameter 15-31 InternalFaultReason* if possible.
46	33	Control Voltage Fault	–	X	X	Control voltage is low. Contact the local Danfoss supplier.

Fault number	Alarm/ warning bit number	Fault text	Warning	Alarm	Trip locked	Cause of problem
47	23	24 V supply low	X	X	X	24 V DC supply may be overloaded.
50	–	AMA calibration failed	–	X	–	Contact the local Danfoss supplier.
51	15	AMA Unom, Inom	–	X	–	The setting of motor voltage, motor current, and motor power is wrong. Check the settings.
52	–	AMA low Inom	–	X	–	The motor current is too low. Check the settings.
53	–	AMA big motor	–	X	–	The motor is too big to perform AMA.
54	–	AMA small mot	–	X	–	The motor is too small to perform AMA.
55	–	AMA par. range	–	X	–	The parameter values found from the motor are outside the acceptable range.
56	–	AMA user interrupt	–	X	–	The AMA has been interrupted by the user.
57	–	AMA timeout	–	X	–	Try to start the AMA again a number of times, until the AMA is carried out. **NOTICE** Repeated runs may heat the motor to a level where the resistance R_s and R_r are increased. In most cases, however, this is not critical.
58	–	AMA internal	X	X	–	Contact the local Danfoss supplier.
59	25	Current limit	X	–	–	The current is higher than the value in *parameter 4-18 Current Limit*.
60	44	External Interlock	–	X	–	External interlock has been activated. To resume normal operation, apply 24 V DC to the terminal programmed for external interlock and reset the drive (via serial communication, digital I/O, or by pressing [Reset] key on the LCP).
66	26	Heat sink Temperature Low	X	–	–	This warning is based on the temperature sensor in the IGBT module (on 400 V, 30–90 kW (40–125 hp) and 600 V units).
69	1	Pwr. Card Temp	X	X	X	The temperature sensor on the power card exceeds the upper or lower limits.
70	36	Illegal FC configuration	–	X	X	The control card and power card are not matched.
79	–	Illegal power section configuration	X	X	–	Internal fault. Contact the local Danfoss supplier.

Fault number	Alarm/ warning bit number	Fault text	Warning	Alarm	Trip locked	Cause of problem
80	29	Drive initialised	–	X	–	All parameter settings are initialized to default settings.
87	47	Auto DC Braking	X	–	–	The drive is auto DC braking.
95	40	Broken Belt	X	X	–	Torque is below the torque level set for no load, indicating a broken belt. See *parameter group 22-6* Broken Belt Detection*.
126	–	Motor Rotating	–	X	–	High back EMF voltage. Stop the rotor of the PM motor.
200	–	Fire Mode	X	–	–	Fire mode has been activated.
202	–	Fire Mode Limits Exceeded	X	–	–	Fire mode has suppressed 1 or more warranty voiding alarms.
250	–	New spare-part	–	X	X	The power or switch mode power supply has been exchanged (on 400 V, 30–90 kW (40–125 hp) and 600 V units). Contact the local Danfoss supplier.
251	–	New Type-code	–	X	X	The drive has a new type code (on 400 V, 30– 90 kW (40–125 hp) and 600 V units). Contact the local Danfoss supplier.

6 Specifications

6.1 Mains Supply

6.1.1 3x200–240 V AC

Table 20: 3x200–240 V AC, 0.25–7.5 kW (0.33–10 hp)

Drive	PK25	PK37	PK75	P1K5	P2K2	P3K7	P5K5	P7K5
Typical shaft output [kW]	0.25	0.37	0.75	1.5	2.2	3.7	5.5	7.5
Typical shaft output [hp]	0.33	0.5	1.0	2.0	3.0	5.0	7.5	10.0
Protection rating IP20	H1	H1	H1	H1	H2	H3	H4	H4
Maximum cable size in terminals (mains, motor) [m^2 (AWG)]	4 (10)	4 (10)	4 (10)	4 (10)	4 (10)	4 (10)	16 (6)	16 (6)
Output current - 40°C (104°F) ambient temperature								
Continuous (3x200–240 V) [A]	1.5	2.2	4.2	6.8	9.6	15.2	22.0	28.0
Intermittent (3x200–240 V) [A]	1.7	2.4	4.6	7.5	10.6	16.7	24.2	30.8
Maximum input current								
Continuous 3x200–240 V) [A]	1.1	1.6	2.8	5.6	8.6/7.2	14.1/12.0	21.0/18.0	28.3/24.0
Intermittent (3x200–240V) [A]	1.2	1.8	3.1	6.2	9.5/7.9	15.5/13.2	23.1/19.8	31.1/26.4
Maximum mains fuses	See 3.2.4.5 Recommendation of Fuses and Circuit Breakers.							
Estimated power loss [W], Best case/typical [1]	12/14	15/18	21/26	48/60	80/102	97/120	182/204	229/268
Weight enclosure protection rating IP20 [kg (lb)]	2.0 (4.4)	2.0 (4.4)	2.0 (4.4)	2.1 (4.6)	3.4 (7.5)	4.5 (9.9)	7.9 (17.4)	7.9 (17.4)
Efficiency [%], best case/typical [2]	97.0/96.5	97.3/96.8	98.0/97.6	97.6/97.0	97.1/96.3	97.9/97.4	97.3/97.0	98.5/97.1
Output current - 50°C (122°F) ambient temperature								
Continuous (3x200–240 V) [A]	1.5	1.9	3.5	6.8	9.6	13.0	19.8	23.0
Intermittent (3x200–240 V) [A]	1.7	2.1	3.9	7.5	10.6	14.3	21.8	25.3

[1] *Applies for dimensioning of drive cooling. If the switching frequency is higher than the default setting, the power losses may increase. LCP and typical control card power consumptions are included. For power loss data according to EN 50598-2, refer to Danfoss MyDrive® ecoSmart™ website.*

[2] *Efficiency measured at nominal current. For energy efficiency class, see 6.4.13 Ambient Conditions. For part load losses, see Danfoss MyDrive® ecoSmart™ website.*

Table 21: 3x200–240 V AC, 11–45 kW (15–60 hp)

Drive	P11K	P15K	P18K	P22K	P30K	P37K	P45K
Typical shaft output [kW]	11.0	15.0	18.5	22.0	30.0	37.0	45.0
Typical shaft output [hp]	15.0	20.0	25.0	30.0	40.0	50.0	60.0
Protection rating IP20	H5	H6	H6	H7	H7	H8	H8

Drive	P11K	P15K	P18K	P22K	P30K	P37K	P45K
Maximum cable size in terminals (mains, motor) [m^2 (AWG)]	16 (6)	35 (2)	35 (2)	50 (1)	50 (1)	95 (0)	120 (4/0)
Output current - 40°C (104°F) ambient temperature							
Continuous (3x200–240 V) [A]	42.0	59.4	74.8	88.0	115.0	143.0	170.0
Intermittent (3x200–240 V) [A]	46.2	65.3	82.3	96.8	126.5	157.3	187.0
Maximum input current							
Continuous 3x200–240 V) [A]	41.0/38.2	52.7	65.0	76.0	103.7	127.9	153.0
Intermittent (3x200–240V) [A]	45.1/42.0	58.0	71.5	83.7	114.1	140.7	168.3
Maximum mains fuses	See 3.2.4.5 Recommendation of Fuses and Circuit Breakers.						
Estimated power loss [W], Best case/typical [1]	369/386	512	697	879	1149	1390	1500
Weight enclosure protection rating IP20 [kg (lb)]	9.5 (20.9)	24.5 (54)	24.5 (54)	36.0 (79.4)	36.0 (79.4)	51.0 (112.4)	51.0 (112.4)
Efficiency [%], best case/typical [2]	97.2/97.1	97.0	97.1	96.8	97.1	97.1	97.3
Output current - 50°C (122°F) ambient temperature							
Continuous (3x200–240 V) [A]	33.0	41.6	52.4	61.6	80.5	100.1	119
Intermittent (3x200–240 V) [A]	36.3	45.8	57.6	67.8	88.6	110.1	130.9

[1] *Applies for dimensioning of drive cooling. If the switching frequency is higher than the default setting, the power losses may increase. LCP and typical control card power consumptions are included. For power loss data according to EN 50598-2, refer to Danfoss MyDrive® ecoSmart™ website.*

[2] *Efficiency measured at nominal current. For energy efficiency class, see 6.4.13 Ambient Conditions. For part load losses, see Danfoss MyDrive® ecoSmart™ website.*

6.1.2 3x380–480 V AC

Table 22: 3x380–480 V AC, 0.37–15 kW (0.5–20 hp), Enclosure Sizes H1–H4

Drive	PK37	PK75	P1K5	P2K2	P3K0	P4K0	P5K5	P7K5	P11K	P15K
Typical shaft output [kW]	0.37	0.75	1.5	2.2	3.0	4.0	5.5	7.5	11.0	15.0
Typical shaft output [hp]	0.5	1.0	2.0	3.0	4.0	5.0	7.5	10.0	15.0	20.0
Protection rating IP20	H1	H1	H1	H2	H2	H2	H3	H3	H4	H4
Maximum cable size in terminals (mains, motor) [mm^2 (AWG)]	4 (10)	4 (10)	4 (10)	4 (10)	4 (10)	4 (10)	4 (10)	4 (10)	16 (6)	16 (6)
Output current - 40°C (104°F) ambient temperature										
Continuous (3x380–440 V)[A]	1.2	2.2	3.7	5.3	7.2	9.0	12.0	15.5	23.0	31.0
Intermittent (3x380–440 V) [A]	1.3	2.4	4.1	5.8	7.9	9.9	13.2	17.1	25.3	34.0
Continuous (3x441–480 V) [A]	1.1	2.1	3.4	4.8	6.3	8.2	11.0	14.0	21.0	27.0
Intermittent (3x441–480 V) [A]	1.2	2.3	3.7	5.3	6.9	9.0	12.1	15.4	23.1	29.7
Maximum input current										

Drive	PK37	PK75	P1K5	P2K2	P3K0	P4K0	P5K5	P7K5	P11K	P15K
Continuous (3x380–440 V) [A]	1.2	2.1	3.5	4.7	6.3	8.3	11.2	15.1	22.1	29.9
Intermittent (3x380–440 V) [A]	1.3	2.3	3.9	5.2	6.9	9.1	12.3	16.6	24.3	32.9
Continuous (3x441–480 V) [A]	1.0	1.8	2.9	3.9	5.3	6.8	9.4	12.6	18.4	24.7
Intermittent (3x441–480 V) [A]	1.1	2.0	3.2	4.3	5.8	7.5	10.3	13.9	20.2	27.2
Maximum mains fuses	See 3.2.4.5 Recommendation of Fuses and Circuit Breakers.									
Estimated power loss [W], best case/typical [1]	13/15	16/21	46/57	46/58	66/83	95/118	104/131	159/198	248/274	353/379
Weight enclosure protection rating IP20 [kg (lb)]	2.0 (4.4)	2.0 (4.4)	2.1 (4.6)	3.3 (7.3)	3.3 (7.3)	3.4 (7.5)	4.3 (9.5)	4.5 (9.9)	7.9 (17.4)	7.9 (17.4)
Efficiency [%], best case/typical [2]	97.8/97.3	98.0/97.6	97.7/97.2	98.3/97.9	98.2/97.8	98.0/97.6	98.4/98.0	98.2/97.8	98.1/97.9	98.0/97.8
Output current - 50°C (122°F) ambient temperature										
Continuous (3x380–440 V) [A]	1.04	1.93	3.7	4.85	6.3	8.4	10.9	14.0	20.9	28.0
Intermittent (3x380–440 V) [A]	1.1	2.1	4.07	5.4	6.9	9.2	12.0	15.4	23.0	30.8
Continuous (3x441–480 V) [A]	1.0	1.8	3.4	4.4	5.5	7.5	10.0	12.6	19.1	24.0
Intermittent (3x441–480 V) [A]	1.1	2.0	3.7	4.8	6.1	8.3	11.0	13.9	21.0	26.4

[1] *Applies for dimensioning of drive cooling. If the switching frequency is higher than the default setting, the power losses may increase. LCP and typical control card power consumptions are included. For power loss data according to EN 50598-2, refer to Danfoss MyDrive® ecoSmart™ website.*

[2] *Typical: under rated condition. Best case: the optimal condition is adopt, such as the higher input voltage and lower switching frequency.*

Table 23: 3x380–480 V AC, 18.5–90 kW (25–125 hp), Enclosure Sizes H5–H8

Drive	P18K	P22K	P30K	P37K	P45K	P55K	P75K	P90K
Typical shaft output [kW]	18.5	22.0	30.0	37.0	45.0	55.0	75.0	90.0
Typical shaft output [hp]	25.0	30.0	40.0	50.0	60.0	70.0	100.0	125.0
Protection rating IP20	H5	H5	H6	H6	H6	H7	H7	H8
Maximum cable size in terminals (mains, motor) [mm^2 (AWG)]	16 (6)	16 (6)	35 (2)	35 (2)	35 (2)	50 (1)	95 (0)	120 (250MCM)
Output current-40°C (104°F) ambient temperature								
Continuous (3x380–440 V)[A]	37.0	42.5	61.0	73.0	90.0	106.0	147.0	177.0
Intermittent (3x380–440 V) [A]	40.7	46.8	67.1	80.3	99.0	116.0	161.0	194.0
Continuous (3x441–480 V) [A]	34.0	40.0	52.0	65.0	80.0	105.0	130.0	160.0
Intermittent (3x441–480 V) [A]	37.4	44.0	57.2	71.5	88.0	115.0	143.0	176.0
Maximum input current								
Continuous (3x380–440 V) [A]	35.2	41.5	57.0	70.0	84.0	103.0	140.0	166.0
Intermittent (3x380–440 V) [A]	38.7	45.7	62.7	77.0	92.4	113.0	154.0	182.0
Continuous (3x441–480 V) [A]	29.3	34.6	49.2	60.6	72.5	88.6	120.9	142.7

Drive	P18K	P22K	P30K	P37K	P45K	P55K	P75K	P90K
Intermittent (3x441–480 V) [A]	32.2	38.1	54.1	66.7	79.8	97.5	132.9	157.0
Maximum mains fuses	See 3.2.4.5 Recommendation of Fuses and Circuit Breakers.							
Estimated power loss [W], best case/typical [1]	412/456	475/523	733	922	1067	1133	1733	2141
Weight enclosure protection rating IP20 [kg (lb)]	9.5 (20.9)	9.5 (20.9)	24.5 (54)	24.5 (54)	24.5 (54)	36.0 (79.4)	36.0 (79.4)	51.0 (112.4)
Efficiency [%], best case/typical [2]	98.1/97.9	98.1/97.9	97.8	97.7	98	98.2	97.8	97.9
Output current - 50°C (122°F) ambient temperature								
Continuous (3x380–440 V) [A]	34.1	38.0	48.8	58.4	72.0	74.2	102.9	123.9
Intermittent (3x380–440 V) [A]	37.5	41.8	53.7	64.2	79.2	81.6	113.2	136.3
Continuous (3x441–480 V) [A]	31.3	35.0	41.6	52.0	64.0	73.5	91.0	112.0
Intermittent (3x441–480 V) [A]	34.4	38.5	45.8	57.2	70.4	80.9	100.1	123.2

[1] *Applies for dimensioning of drive cooling. If the switching frequency is higher than the default setting, the power losses may increase. LCP and typical control card power consumptions are included. For power loss data according to EN 50598-2, refer to Danfoss MyDrive® ecoSmart™ website.*

[2] *Efficiency measured at nominal current. For energy efficiency class, see 6.4.13 Ambient Conditions. For part load losses, see Danfoss MyDrive® ecoSmart™ website.*

Table 24: 3x380–480 V AC, 0.75–18.5 kW (1–25 hp), Enclosure Sizes I2–I4

Drive	PK75	P1K5	P2K2	P3K0	P4KO	P5K5	P7K5	P11K	P15K	P18K
Typical shaft output [kW]	0.75	1.5	2.2	3.0	4.0	5.5	7.5	11	15	18.5
Typical shaft output [hp]	1.0	2.0	3.0	4.0	5.0	7.5	10.0	15	20	25
Protection rating IP54	I2	I2	I2	I2	I2	I3	I3	I4	I4	I4
Maximum cable size in terminals (mains, motor) [mm^2 (AWG)]	4 (10)	4 (10)	4 (10)	4 (10)	4 (10)	4 (10)	4 (10)	16 (6)	16 (6)	16 (6)
Output current - 40°C (104°F) ambient temperature										
Continuous (3x380–440 V) [A]	2.2	3.7	5.3	7.2	9.0	12.0	15.5	23.0	31.0	37.0
Intermittent (3x380–440 V) [A]	2.4	4.1	5.8	7.9	9.9	13.2	17.1	25.3	34.0	40.7
Continuous (3x441–480 V) [A]	2.1	3.4	4.8	6.3	8.2	11.0	14.0	21.0	27.0	34.0
Intermittent (3x441–480 V) [A]	2.3	3.7	5.3	6.9	9.0	12.1	15.4	23.1	29.7	37.4
Maximum input current										
Continuous (3x380–440 V) [A]	2.1	3.5	4.7	6.3	8.3	11.2	15.1	22.1	29.9	35.2
Intermittent (3x380–440 V) [A]	2.3	3.9	5.2	6.9	9.1	12.3	16.6	24.3	32.9	38.7
Continuous (3x441–480 V) [A]	1.8	2.9	3.9	5.3	6.8	9.4	12.6	18.4	24.7	29.3
Intermittent (3x441–480 V) [A]	2.0	3.2	4.3	5.8	7.5	10.3	13.9	20.2	27.2	32.2
Maximum mains fuses	See 3.2.4.5 Recommendation of Fuses and Circuit Breakers.									
Estimated power loss [W], best case/typical [1]	21/16	46/57	46/58	66/83	95/118	104/131	159/198	248/274	353/379	412/456

Drive	PK75	P1K5	P2K2	P3K0	P4KO	P5K5	P7K5	P11K	P15K	P18K
Weight enclosure protection rating IP54 [kg (lb)]	5.3 (11.7)	5.3 (11.7)	5.3 (11.7)	5.3 (11.7)	5.3 (11.7)	7.2 (15.9)	7.2 (15.9)	13.8 (30.4)	13.8 (30.4)	13.8 (30.4)
Efficiency [%], best case/typical (2)	98.0/9 7.6	97.7/9 7.2	98.3/9 7.9	98.2/9 7.8	98.0/9 7.6	98.4/9 8.0	98.2/9 7.8	98.1/9 7.9	98.0/9 7.8	98.1/9 7.9
Output current - 50°C (122°F) ambient temperature										
Continuous (3x380–440 V) [A]	1.93	3.7	4.85	6.3	7.5	10.9	14.0	20.9	28.0	33.0
Intermittent (3x380–440 V) [A]	2.1	4.07	5.4	6.9	9.2	12.0	15.4	23.0	30.8	36.3
Continuous (3x441–480 V) [A]	1.8	3.4	4.4	5.5	6.8	10.0	12.6	19.1	24.0	30.0
Intermittent (3x441–480 V) [A]	2.0	3.7	4.8	6.1	8.3	11.0	13.9	21.0	26.4	33.0

[1] *Applies for dimensioning of drive cooling. If the switching frequency is higher than the default setting, the power losses may increase. LCP and typical control card power consumptions are included. For power loss data according to EN 50598-2, refer to Danfoss MyDrive® ecoSmart™ website.*

[2] *Efficiency measured at nominal current. For energy efficiency class, see 6.4.13 Ambient Conditions. For part load losses, see Danfoss MyDrive® ecoSmart™ website.*

Table 25: 3x380–480 V AC, 22–90 kW (30–125 hp), Enclosure Sizes I6–I8

Drive	P22K	P30K	P37K	P45K	P55K	P75K	P90K
Typical shaft output [kW]	22.0	30.0	37.0	45.0	55.0	75.0	90.0
Typical shaft output [hp]	30.0	40.0	50.0	60.0	70.0	100.0	125.0
Protection rating IP54	I6	I6	I6	I7	I7	I8	I8
Maximum cable size in terminals (mains, motor) [mm^2 (AWG)]	35 (2)	35 (2)	35 (2)	50 (1)	50 (1)	95 (3/0)	120 (4/0)
Output current - 40°C (104°F) ambient temperature							
Continuous (3x380–440 V) [A]	44.0	61.0	73.0	90.0	106.0	147.0	177.0
Intermittent (3x380–440 V) [A]	48.4	67.1	80.3	99.0	116.6	161.7	194.7
Continuous (3x441–480 V) [A]	40.0	52.0	65.0	80.0	105.0	130.0	160.0
Intermittent (3x441–480 V) [A]	44.0	57.2	71.5	88.0	115.5	143.0	176.0
Maximum input current							
Continuous (3x380–440 V) [A]	41.8	57.0	70.3	84.2	102.9	140.3	165.6
Intermittent (3x380–440 V) [A]	46.0	62.7	77.4	92.6	113.1	154.3	182.2
Continuous (3x441–480 V) [A]	36.0	49.2	60.6	72.5	88.6	120.9	142.7
Intermittent (3x441–480 V) [A]	39.6	54.1	66.7	79.8	97.5	132.9	157.0
Maximum mains fuses	See 3.2.4.5 Recommendation of Fuses and Circuit Breakers.						
Estimated power loss [W], best case/typical (1)	496	734	995	840	1099	1520	1781
Weight enclosure protection rating IP54 [kg (lb)]	27 (59.5)	27 (59.5)	27 (59.5)	45 (99.2)	45 (99.2)	65 (143.3)	65 (143.3)
Efficiency [%], best case/typical (2)	98.0	97.8	97.6	98.3	98.2	98.1	98.3
Output current - 50°C (122°F) ambient temperature							

Drive	P22K	P30K	P37K	P45K	P55K	P75K	P90K
Continuous (3x380–440 V) [A]	35.2	48.8	58.4	63.0	74.2	102.9	123.9
Intermittent (3x380–440 V) [A]	38.7	53.9	64.2	69.3	81.6	113.2	136.3
Continuous (3x441–480 V) [A]	32.0	41.6	52.0	56.0	73.5	91.0	112.0
Intermittent (3x441–480 V) [A]	35.2	45.8	57.2	61.6	80.9	100.1	123.2

[1] *Applies for dimensioning of drive cooling. If the switching frequency is higher than the default setting, the power losses may increase. LCP and typical control card power consumptions are included. For power loss data according to EN 50598-2, refer to Danfoss MyDrive® ecoSmart™ website.*

[2] *Efficiency measured at nominal current. For energy efficiency class, see 6.4.13 Ambient Conditions. For part load losses, see Danfoss MyDrive® ecoSmart™ website.*

6.1.3 3x525–600 V AC

Table 26: 3x525–600 V AC, 2.2–15 kW (3–20 hp), Enclosure Sizes H9–H10

Drive	P2K2	P3K0	P3K7	P5K5	P7K5	P11K	P15K
Typical shaft output [kW]	2.2	3.0	3.7	5.5	7.5	11.0	15.0
Typical shaft output [hp]	3.0	4.0	5.0	7.5	10.0	15.0	20.0
Protection rating IP20	H9	H9	H9	H9	H9	H10	H10
Maximum cable size in terminals (mains, motor) [mm^2 (AWG)]	4 (10)	4 (10)	4 (10)	4 (10)	4 (10)	10 (8)	10 (8)
Output current - 40°C (104°F) ambient temperature							
Continuous (3x525–550 V) [A]	4.1	5.2	6.4	9.5	11.5	19.0	23.0
Intermittent (3x525–550 V) [A]	4.5	5.7	7.0	10.5	12.7	20.9	25.3
Continuous (3x551–600 V) [A]	3.9	4.9	6.1	9.0	11.0	18.0	22.0
Intermittent (3x551–600 V) [A]	4.3	5.4	6.7	9.9	12.1	19.8	24.2
Maximum input current							
Continuous (3x525–550 V) [A]	3.7	5.1	5.0	8.7	11.9	16.5	22.5
Intermittent (3x525–550 V) [A]	4.1	5.6	6.5	9.6	13.1	18.2	24.8
Continuous (3x551–600 V) [A]	3.5	4.8	5.6	8.3	11.4	15.7	21.4
Intermittent (3x551–600 V) [A]	3.9	5.3	6.2	9.2	12.5	17.3	23.6
Maximum mains fuses	See 3.2.4.5 Recommendation of Fuses and Circuit Breakers.						
Estimated power loss [W], best case/typical (1)	65	90	110	132	180	216	294
Weight enclosure protection rating IP54 [kg (lb)]	6.6 (14.6)	6.6 (14.6)	6.6 (14.6)	6.6 (14.6)	6.6 (14.6)	11.5 (25.3)	11.5 (25.3)
Efficiency [%], best case/typical (2)	97.9	97	97.9	98.1	98.1	98.4	98.4
Output current - 50°C (122°F) ambient temperature							
Continuous (3x525–550 V) [A]	2.9	3.6	4.5	6.7	8.1	13.3	16.1
Intermittent (3x525–550 V) [A]	3.2	4.0	4.9	7.4	8.9	14.6	17.7

Drive	P2K2	P3K0	P3K7	P5K5	P7K5	P11K	P15K
Continuous (3x551–600 V) [A]	2.7	3.4	4.3	6.3	7.7	12.6	15.4
Intermittent (3x551–600 V) [A]	3.0	3.7	4.7	6.9	8.5	13.9	16.9

[1] *Applies for dimensioning of drive cooling. If the switching frequency is higher than the default setting, the power losses may increase. LCP and typical control card power consumptions are included. For power loss data according to EN 50598-2, refer to Danfoss MyDrive® ecoSmart™ website.*

[2] *Efficiency measured at nominal current. For energy efficiency class, see 6.4.13 Ambient Conditions. For part load losses, see Danfoss MyDrive® ecoSmart™ website.*

Table 27: 3x525–600 V AC, 18.5–90 kW (25–125 hp), Enclosure Sizes H6–H8

Drive	P18K	P22K	P30K	P37K	P45K	P55K	P75K	P90K
Typical shaft output [kW]	18.5	22.0	30.0	37	45.0	55.0	75.0	90.0
Typical shaft output [hp]	25.0	30.0	40.0	50.0	60.0	70.0	100.0	125.0
Protection rating IP20	H6	H6	H6	H7	H7	H7	H8	H8
Maximum cable size in terminals (mains, motor) [mm^2 (AWG)]	35 (2)	35 (2)	35 (2)	50 (1)	50 (1)	50 (1)	95 (0)	120 (4/0)
Output current - 40°C (104°F) ambient temperature								
Continuous (3x525–550 V) [A]	28.0	36.0	43.0	54.0	65.0	87.0	105.0	137.0
Intermittent (3x525–550 V) [A]	30.8	39.6	47.3	59.4	71.5	95.7	115.5	150.7
Continuous (3x551–600 V) [A]	27.0	34.0	41.0	52.0	62.0	83.0	100.0	131.0
Intermittent (3x551–600 V) [A]	29.7	37.4	45.1	57.2	68.2	91.3	110.0	144.1
Maximum input current								
Continuous (3x525–550 V) [A]	27.0	33.1	45.1	54.7	66.5	81.3	109.0	130.9
Intermittent (3x525–550 V) [A]	29.7	36.4	49.6	60.1	73.1	89.4	119.9	143.9
Continuous (3x551–600 V) [A]	25.7	31.5	42.9	52.0	63.3	77.4	103.8	124.5
Intermittent (3x551–600 V) [A]	28.3	34.6	47.2	57.2	69.6	85.1	114.2	137.0
Maximum mains fuses	See 3.2.4.5 Recommendation of Fuses and Circuit Breakers.							
Estimated power loss [W], best case/typical (1)	385	458	542	597	727	1092	1380	1658
Weight enclosure protection rating IP54 [kg (lb)]	24.5 (54)	24.5 (54)	24.5 (54)	36.0 (79.3)	36.0 (79.3)	36.0 (79.3)	51.0 (112.4)	51.0 (112.4)
Efficiency [%], best case/typical (2)	98.4	98.4	98.5	98.5	98.7	98.5	98.5	98.5
Output current - 50°C (122°F) ambient temperature								
Continuous (3x525–550 V) [A]	19.6	25.2	30.1	37.8	45.5	60.9	73.5	95.9
Intermittent (3x525–550 V) [A]	21.6	27.7	33.1	41.6	50.0	67.0	80.9	105.5
Continuous (3x551–600 V) [A]	18.9	23.8	28.7	36.4	43.3	58.1	70.0	91.7
Intermittent (3x551–600 V) [A]	20.8	26.2	31.6	40.0	47.7	63.9	77.0	100.9

[1] *Applies for dimensioning of drive cooling. If the switching frequency is higher than the default setting, the power losses may increase. LCP and typical control card power consumptions are included. For power loss data according to EN 50598-2, refer to Danfoss MyDrive® ecoSmart™ website.*

[2] *Efficiency measured at nominal current. For energy efficiency class, see 6.4.13 Ambient Conditions. For part load losses, see Danfoss MyDrive® ecoSmart™ website.*

6.2 EMC Emission Test Results

The following test results have been obtained using a system with a drive, a shielded control cable, a control box with potentiometer, and a shielded motor cable.

Table 28: EMC Emission Test Results

RFI filter type	Conduct emission. Maximum shielded cable length [m (ft)]						Radiated emission			
	Industrial environment									
EN 55011	Class A Group 2 Industrial environment		Class A Group 1 Industrial environment		Class B Housing, trades and light industries		Class A Group 1 Industrial environment		Class B Housing, trades and light industries	
EN/IEC 61800-3	Category C3 Second environment Industrial		Category C2 First environment Home and office		Category C1 First environment Home and office		Category C2 First environment Home and office		Category C1 First environment Home and office	
	Without external filter	With external filter	Without external filter	With external filter	Without external filter	With external filter	Without external filter	With external filter	Without external filter	With external filter
H4 RFI filter (EN55011 A1, EN/IEC61800-3 C2)										
0.25–11 kW (0.34–15 hp) 3x200–240 V IP20	–	–	25 (82)	50 (164)	–	20 (66)	Yes	Yes	–	No
0.37–22 kW (0.5–30 hp) 3x380–480 V IP20	–	–	25 (82)	50 (164)	–	20 (66)	Yes	Yes	–	No
H2 RFI filter (EN 55011 A2, EN/IEC 61800-3 C3)										
15–45 kW (20–60 hp) 3x200–240 V IP20	25 (82)	–	–	–	–	–	No	–	No	–
30–90 kW (40–120 hp) 3x380–480 V IP20	25 (82)	–	–	–	–	–	No	–	No	–
0.75–18.5 kW (1–25 hp) 3x380–480 V IP54	25 (82)	–	–	–	–	–	Yes	–	–	–

RFI filter type	Conduct emission. Maximum shielded cable length [m (ft)]						Radiated emission			
22–90 kW (30–120 hp) 3x380–480 V IP54	25 (82)	–	–	–	–	–	No	–	No	–
H3 RFI filter (EN55011 A1/B, EN/IEC 61800-3 C2/C1)										
15–45 kW (20–60 hp) 3x200–240 V IP20	–	–	50 (164)	–	20 (66)	–	Yes	–	No	–
30–90 kW (40–120 hp) 3x380–480 V IP20	–	–	50 (164)	–	20 (66)	–	Yes	–	No	–
0.75–18.5 kW (1–25 hp) 3x380–480 V IP54	–	–	25 (82)	–	10 (33)	–	Yes	–	–	–
22–90 kW (30–120 hp) 3x380–480 V IP54	–	–	25 (82)	–	10 (33)	–	Yes	–	No	–

6.3 Special Conditions

6.3.1 Derating for Ambient Temperature and Switching Frequency

Ensure that the ambient temperature measured over 24 hours is at least 5 °C (41 °F) lower than the maximum ambient temperature that is specified for the drive. If the drive is operated at a high ambient temperature, decrease the constant output current. For derating curve, see the VLT® HVAC Basic Drive FC 101 Design Guide.

6.3.2 Derating for Low Air Pressure and High Altitudes

The cooling capability of air is decreased at low air pressure. For altitudes above 2000 m (6562 ft), contact Danfoss regarding PELV. Below 1000 m (3281 ft) altitude, derating is not necessary. For altitudes above 1000 m (3281 ft), decrease the ambient temperature or the maximum output current. Decrease the output by 1% per 100 m (328 ft) altitude above 1000 m (3281 ft) or reduce the maximum ambient temperature by 1 °C (33.8 °F) per 200 m (656 ft).

6.4 General Technical Data

6.4.1 Protection and Features

- Electronic motor thermal protection against overload.
- Temperature monitoring of the heat sink ensures that the drive trips if there is overtemperature.
- The drive is protected against short circuits between motor terminals U, V, W.
- When a motor phase is missing, the drive trips and issues an alarm.
- When a mains phase is missing, the drive trips or issues a warning (depending on the load).
- Monitoring of the DC-link voltage ensures that the drive trips when the DC-link voltage is too low or too high.
- The drive is protected against ground faults on motor terminals U, V, W.

6.4.2 Mains Supply (L1, L2, L3)

Supply voltage	200–240 V ±10%
Supply voltage	380–480 V ±10%
Supply voltage	525–600 V ±10%
Supply frequency	50/60 Hz
Maximum imbalance temporary between mains phases	3.0% of rated supply voltage
True power factor (λ)	≥0.9 nominal at rated load
Displacement power factor (cosφ) near unity	(>0.98)
Switching on the input supply L1, L2, L3 (power-ups) enclosure sizes H1–H5, I2, I3, I4	Maximum 1 time/30 s
Switching on the input supply L1, L2, L3 (power-ups) enclosure sizes H6–H10, I6–I8	Maximum 1 time/minute
Environment according to EN 60664-1	Overvoltage category III/pollution degree 2

The unit is suitable for use on a circuit capable of delivering not more than 100000 A_{rms} symmetrical Amperes, 240/480 V maximum.

6.4.3 Motor Output (U, V, W)

Output voltage	0–100% of supply voltage
Output frequency	0–400 Hz
Switching on output	Unlimited
Ramp times	0.05–3600 s

6.4.4 Cable Length and Cross-section

Maximum motor cable length, shielded/armored (EMC-correct installation)	See 6.2 EMC Emission Test Results.
Maximum motor cable length, unshielded/unarmoured	50 m (164 ft)
Maximum cross-section to motor, mains	See 6.1.2 3x380–480 V AC for more information
Cross-section DC terminals for filter feedback on enclosure sizes H1–H3, I2, I3, I4	4 mm^2/11 AWG
Cross-section DC terminals for filter feedback on enclosure sizes H4–H5	16 mm^2/6 AWG
Maximum cross-section to control terminals, rigid wire	2.5 mm^2/14 AWG
Maximum cross-section to control terminals, flexible cable	2.5 mm^2/14 AWG

Minimum cross-section to control terminals	0.05 mm^2/30 AWG

6.4.5 Digital Inputs

Programmable digital inputs	4
Terminal number	18, 19, 27, 29
Logic	PNP or NPN
Voltage level	0–24 V DC
Voltage level, logic 0 PNP	<5 V DC
Voltage level, logic 1 PNP	>10 V DC
Voltage level, logic 0 NPN	>19 V DC
Voltage level, logic 1 NPN	<14 V DC
Maximum voltage on input	28 V DC
Input resistance, R_i	Approximately 4 kΩ
Digital input 29 as thermistor input	Fault: >2.9 kΩ and no fault: <800 Ω
Digital input 29 as pulse input	Maximum frequency 32 kHz push-pull-driven & 5 kHz (O.C.)

6.4.6 Analog Inputs

Number of analog inputs	2
Terminal number	53, 54
Terminal 53 mode	*Parameter 16-61 Terminal 53 Setting*: 1 = voltage, 0 = current
Terminal 54 mode	*Parameter 16-63 Terminal 54 Setting*: 1 = voltage, 0 = current
Voltage level	0–10 V
Input resistance, R_i	Approximately 10 kΩ
Maximum voltage	20 V
Current level	0/4–20 mA (scalable)
Input resistance, R_i	<500 Ω
Maximum current	29 mA
Resolution on analog input	10 bit

6.4.7 Analog Outputs

Number of programmable analog outputs	2
Terminal number	42, 45 [(1)]
Current range at analog output	0/4–20 mA
Maximum load to common at analog output	500 Ω
Maximum voltage at analog output	17 V
Accuracy on analog output	Maximum error: 0.4% of full scale
Resolution on analog output	10 bit

[1] *Terminals 42 and 45 can also be programmed as digital outputs.*

6.4.8 Digital Output

Number of digital outputs	4
Terminals 27 and 29	
Terminal number	27, 29 [1]
Voltage level at digital output	0–24 V
Maximum output current (sink and source)	40 mA
Terminals 42 and 45	
Terminal number	42, 45 [2]
Voltage level at digital output	17 V
Maximum output current at digital output	20 mA
Maximum load at digital output	1 kΩ

[1] *Terminals 27 and 29 can also be programmed as input.*

[2] *Terminals 42 and 45 can also be programmed as analog output.*

The digital outputs are galvanically isolated from the supply voltage (PELV) and other high-voltage terminals.

6.4.9 Control Card, RS485 Serial Communication

Terminal number	68 (P, TX+, RX+), 69 (N, TX-, RX-)
Terminal number	61 common for terminals 68 and 69

6.4.10 Control Card, 24 V DC Output

Terminal number	12
Maximum load	80 mA

6.4.11 Relay Output

Programmable relay outputs	2
Relay 01 and 02 (enclosure size H1–H5 & I2–I4)	01–03 (NC), 01–02 (NO), 04–06 (NC), 04–05 (NO)
Maximum terminal load (AC-1) [1] on 01–02/04–05 (NO) (resistive load)	250 V AC, 3 A
Maximum terminal load (AC-15) [1] on 01–02/04–05 (NO) (inductive load @ cosφ 0.4)	250 V AC, 0.2 A
Maximum terminal load (DC-1) [1] on 01–02/04–05 (NO) (resistive load)	30 V DC, 2 A
Maximum terminal load (DC-13) [1] on 01–02/04–05 (NO) (inductive load)	24 V DC, 0.1 A
Maximum terminal load (AC-1) [1] on 01–03/04–06 (NC) (resistive load)	250 V AC, 3 A
Maximum terminal load (AC-15) [1] on 01–03/04–06 (NC) (inductive load @ cosφ 0.4)	250 V AC, 0.2 A
Maximum terminal load (DC-1) [1] on 01–03/04–06 (NC) (resistive load)	30 V DC, 2 A
Minimum terminal load on 01–03 (NC), 01–02 (NO)	24 V DC 10 mA, 24 V AC 20 mA
Environment according to EN 60664-1	Overvoltage category III/pollution degree 2

[1] *IEC 60947 parts 4 and 5. Endurance of the relay varies with different load type, switching current, ambient temperature, driving configuration, working profile, and so forth. It is recommended to mount a snubber circuit when connecting inductive loads to the relays.*

Programmable relay outputs	
Relay 01 terminal number (enclosure size H9)	01–03 (NC), 01–02 (NO)
Maximum terminal load (AC-1) [1] on 01–03 (NC), 01–02 (NO) (resistive load)	240 V AC, 2 A
Maximum terminal load (AC-15) [1] (inductive load @ cosφ 0.4)	240 V AC, 0.2 A
Maximum terminal load (DC-1) [1] on 01–02 (NO), 01–03 (NC) (resistive load)	60 V DC, 1 A
Maximum terminal load (DC-13) [1] (inductive load)	24 V DC, 0.1 A
Relay 01 and 02 terminal number (enclosure size H6, H7, H8, H9 (relay 2 only), H10, and I6–I8)	01–03 (NC), 01–02 (NO), 04–06 (NC), 04– 05 (NO)
Maximum terminal load (AC-1) [1] on 04–05 (NO) (resistive load) [2] [3]	400 V AC, 2 A
Maximum terminal load (AC-15) [1] on 04–05 (NO) (inductive load @ cosφ 0.4)	240 V AC, 0.2 A
Maximum terminal load (DC-1) [1] on 04–05 (NO) (resistive load)	80 V DC, 2 A
Maximum terminal load (DC-13) [1] on 04–05 (NO) (inductive load)	24 V DC, 0.1 A
Maximum terminal load (AC-1) [1] on 04–06 (NC) (resistive load)	240 V AC, 2 A
Maximum terminal load (AC-15) [1] on 04–06 (NC) (inductive load @ cosφ 0.4)	240 V AC, 0.2 A
Maximum terminal load (DC-1) [1] on 04–06 (NC) (resistive load)	50 V DC, 2 A
Maximum terminal load (DC-13) [1] on 04–06 (NC) (inductive load)	24 V DC, 0.1 A
Minimum terminal load on 01–03 (NC), 01–02 (NO), 04–06 (NC), 04–05 (NO)	24 V DC 10 mA, 24 V AC 20 mA
Environment according to EN 60664-1	Overvoltage category III/pollution degree 2

[1] *IEC 60947 parts 4 and 5. Endurance of the relay varies with different load type, switching current, ambient temperature, driving configuration, working profile, and so forth. It is recommended to mount a snubber circuit when connecting inductive loads to the relays.*

[2] *Overvoltage Category II.*

[3] *UL applications 300 V AC 2 A.*

6.4.12 Control Card, 10 V DC Output

Terminal number	50
Output voltage	10.5 V ±0.5 V
Maximum load	25 mA

6.4.13 Ambient Conditions

Enclosure protection rating	IP20, IP54 (not for outdoor installation)
Enclosure kit available	IP21, TYPE 1
Vibration test	1.0 g
Maximum relative humidity	5–95% (IEC 60721-3-3; Class 3K3 (non-condensing)) during operation
Aggressive environment (IEC 60721-3-3), coated (standard) enclosure sizes H1–H5	Class 3C3
Aggressive environment (IEC 60721-3-3), non-coated enclosure sizes H6–H10	Class 3C2
Aggressive environment (IEC 60721-3-3), coated (optional) enclosure sizes H6–H10	Class 3C3

Aggressive environment (IEC 60721-3-3), non-coated enclosure sizes I2–I8	Class 3C2
Test method according to IEC 60068-2-43 H2S (10 days)	
Ambient temperature [1]	See maximum output current at 40/50 °C (104/122 °F) in 6.1.2 3x380–480 V AC.
Minimum ambient temperature during full-scale operation	0 °C (32 °F)
Minimum ambient temperature at reduced performance, enclosure sizes H1–H5 and I2–I4	-20 °C (-4 °F)
Minimum ambient temperature at reduced performance, enclosure sizes H6–H10 and I6–I8	-10 °C (14 °F)
Temperature during storage/transport	-30 to +65/70 °C (-22 to +149/158°F)
Maximum altitude above sea level without derating	1000 m (3281 ft)
Maximum altitude above sea level with derating	3000 m (9843 ft)
Derating for high altitude	See 6.3.2 Derating for Low Air Pressure and High Altitudes.
Safety standards	EN/IEC 61800-5-1, UL 508C
EMC standards, Emission	EN 61800-3, EN 61000-6-3/4, EN 55011, IEC 61800-3
EMC standards, Immunity	EN 61800-3, EN 61000-3-12, EN 61000-6-1/2, EN 61000-4-2, EN 61000-4-3, EN 61000-4-4, EN 61000-4-5, EN 61000-4-6
Energy efficiency class [2]	IE2

[1] *Refer to Special Conditions in the design guide for:*

- *Derating for high ambient temperature.*
- *Derating for high altitude.*

[2] *Determined according to EN 50598-2 at:*

- *Rated load.*
- *90% rated frequency.*
- *Switching frequency factory setting.*
- *Switching pattern factory setting.*

Index

V

W

ENGINEERING
TOMORROW

Danfoss A/S
Ulsnaes 1
DK-6300 Graasten
vlt-drives.danfoss.com