Contents

1 How to Read the Instruction Manual

1.1.1 Copyright, Limitation of Liability and Revision Rights

1.1.2 Available Literature for VLT® AQUA DriveFC 200

- VLT® AQUA Drive Instruction Manual MG.20.Mx.yy provides the neccessary information for getting the drive up and running.
- VLT® AQUA Drive High Power Instruction Manual MG.20.Px.yy provides the neccessary information for getting the HP drive up and running.
- VLT® AQUA Drive Design Guide MG.20.Nx.yy contains all the technical information about the drive and customer design and applications.
- VLT® AQUA Drive Programming Guide MN.20.Ox.yy provides information on how to program and includes complete parameter descriptions.
- VLT® AQUA Drive FC 200 Profibus MG.33.Cx.yy
- VLT® AQUA Drive FC 200 DeviceNet MG.33.Dx.yy
- Output Filters Design Guide MG.90.Nx.yy
- VLT® AQUA Drive FC 200 Cascade Controller MI.38.Cx.yy
- Application Note MN20A102: Submersible Pump Application
- Application Note MN20B102: Master/Follower Operation Application
- Application Note MN20F102: Drive Closed-loop and Sleep Mode
- Instruction MI.38.Bx.yy: Installation Instruction for Mounting Brackets Enclosure type A5, B1, B2, C1 and C2 IP21, IP55 or IP66
- Instruction MI.90.Lx.yy: Analog I/O Option MCB109
- Instruction MI.33.Hx.yy: Panel through mount kit

x = Revision number
yy = Language code

Danfoss technical literature is also available online at
www.danfoss.com/BusinessAreas/DrivesSolutions/Documentations/Technical+Documentation.htm.

1

1.1.3 Software Version and Approvals

VLT AQUA Low Harmonic Drive

Software version: 1.33

This manual can be used with all VLT AQUA Low Harmonic Drive adjustable frequency drives with software version 1.33.
The software version number can be found in parameter 15-43 on the drive LCP.

NOTE!
The VLT AQUA Low Harmonic Drive has two different LCPs, one for the adjustable frequency drive (to the right) and one for the active filter (to the left). Each LCP controls only the unit it is connected to and there is no communication between the two LCPs

1.1.4 Symbols

Symbols used in this Instruction Manual.

NOTE!
Indicates something to be noted by the reader.

Indicates a general warning.

Indicates a high-voltage warning.

* Indicates a default setting

2 Safety

2.1.1 Safety note

The voltage of the adjustable frequency drive is dangerous whenever connected to line power. Incorrect installation of the motor, adjustable frequency drive or serial communication bus may cause damage to the equipment, serious personal injury or death. Consequently, the instructions in this manual, as well as national and local rules and safety regulations, must be complied with.

Safety Regulations

1. The adjustable frequency drive must be disconnected from line power if repair work is to be carried out. Make sure that the line power supply has been disconnected and that the necessary time has passed before removing motor and line power plugs.
2. The [STOP/RESET] key on the control panel of the adjustable frequency drive does not disconnect the equipment from line power and is thus not to be used as a safety switch.
3. Correct protective grounding of the equipment must be established, the user must be protected against supply voltage, and the motor must be protected against overload in accordance with applicable national and local regulations.
4. The ground leakage currents are higher than 3.5 mA.
5. Protection against motor overload is set by par. 1-90 *Motor Thermal Protection*. If this function is desired, set par. 1-90 to data value [ETR trip] (default value) or data value [ETR warning]. Note: The function is initialized at 1.16 x rated motor current and rated motor frequency. For the North American market: The ETR functions provide class 20 motor overload protection in accordance with NEC.
6. Do not remove the plugs for the motor and line power supply while the adjustable frequency drive is connected to line power. Make sure that the line power supply has been disconnected and that the necessary time has passed before removing motor and line power plugs.
7. Please note that the adjustable frequency drive has more voltage inputs than L1, L2 and L3 when load sharing (linking of the DC intermediate circuit) and external 24 V DC have been installed. Make sure that all voltage inputs have been disconnected and that the necessary time has passed before commencing repair work.

Installation at High Altitudes

Installation at high altitude:
At altitudes above 9843 ft [3 km], please contact Danfoss Drives regarding PELV.

Warning against Unintended Start

1. The motor can be brought to a stop by means of digital commands, bus commands, references or a local stop, while the adjustable frequency drive is connected to line power. If personal safety considerations make it necessary to ensure that no unintended start occurs, these stop functions are not sufficient. 2. While parameters are being changed, the motor may start. Consequently, the stop key [RESET] must always be activated; following which data can be modified. 3. A motor that has been stopped may start if faults occur in the electronics of the adjustable frequency drive, or if a temporary overload or a fault in the supply line power or the motor connection ceases.

Warning:
Touching the electrical parts may be fatal - even after the equipment has been disconnected from line power.

Also make sure that other voltage inputs have been disconnected, such as external 24 V DC, load sharing (linkage of DC intermediate circuit), as well as the motor connection for kinetic backup.

2

2.1.2 General Warning

Warning:
Touching the electrical parts may be fatal - even after the equipment has been disconnected from line power.
Also make sure that other voltage inputs have been disconnected, (linkage of DC intermediate circuit), as well as the motor connection for kinetic backup.
Before touching any potentially live parts of the adjustable frequency drive, wait at least as follows:
380–480 V, 215–335 hp [160–250 kW], wait at least 20 minutes.
380–480 V, 450–950 hp [315–710 kW], wait at least 40 minutes.
Shorter time is allowed only if indicated on the nameplate for the specific unit. Be aware that there may be high voltage on the DC links even when the control card LEDs are turned off. A red LED is mounted on a circuit board inside both the drive and the active filter to indicate the DC bus voltages. The red LED will stay lit until the DC link is 50 VDC or lower.

Leakage Current
The ground leakage current from the adjustable frequency drive exceeds 3.5 mA. According to IEC 61800-5-1, a reinforced protective ground connection must be ensured by means of: a min. 0.015 in² [10 mm²] Cu or 0.025 in² [16 mm²] Al PE wire or an additional PE wire - with the same cable cross-section as the line power wiring - must be terminated separately.
Residual Current Device
This product can cause DC current in the protective conductor. Where a residual current device (RCD) is used for extra protection, only an RCD of Type B (time delayed) shall be used on the supply side of this product. See also RCD Application Note MN.90.GX.02.
Protective grounding of the adjustable frequency drive and the use of RCDs must always follow national and local regulations.

2.1.3 Before Commencing Repair Work

1. Disconnect the adjustable frequency drive from line power.
2. Disconnect DC bus terminals 88 and 89
3. Wait at least the time mentioned above in the section General Warning.
4. Remove motor cable

2.1.4 Special conditions

Electrical ratings:
The rating indicated on the nameplate of the adjustable frequency drive is based on a typical 3-phase line power supply within the specified voltage, current and temperature ranges, which are expected to be used in most applications.

The adjustable frequency drives also support other special applications, which affect the electrical ratings of the adjustable frequency drive. Special conditions that affect the electrical ratings might be:

- Single phase applications.
- High temperature applications which require derating of the electrical ratings
- Marine applications with more severe environmental conditions.

Consult the relevant clauses in these instructions and in the **Design Guide** for information about the electrical ratings.

Installation requirements:

The overall electrical safety of the adjustable frequency drive requires special installation considerations regarding:

- Fuses and circuit breakers for overcurrent and short-circuit protection
- Selection of power cables (line power, motor, brake, load sharing and relay)
- Grid configuration (IT,TN, grounded leg, etc.)
- Safety of low-voltage ports (PELV conditions).

Consult the relevant clauses in these instructions and in the **Design Guide** for information about the installation requirements.

2.1.5 Avoid unintended start

While the adjustable frequency drive is connected to line power, the motor can be started/stopped using digital commands, bus commands, references or via the Local Control Panel.

- Disconnect the adjustable frequency drive from line power whenever personal safety considerations make it necessary to avoid an unintended start.
- To avoid unintended start, always activate the [OFF] key before changing parameters.
- Unless terminal 37 is turned off, an electronic fault, temporary overload, a fault in the line power supply, or lost motor connection may cause a stopped motor to start.

2.1.6 Safe Stop Installation

To carry out an installation of a Category 0 Stop (EN60204) in conformity with Safety Category 3 (EN954-1), follow these instructions:

1. The bridge (jumper) between Terminal 37 and 24 V DC must be removed. Cutting or breaking the jumper is not sufficient. Remove it entirely to avoid short-circuiting. See jumper in figure.
2. Connect terminal 37 to 24 V DC by a short circuit-protected cable. The 24 V DC voltage supply must be interruptible by an EN954-1 category 3 circuit interrupt device. If the interrupt device and the adjustable frequency drive are placed in the same installation panel, you can use a non-shielded cable instead of a shielded one.

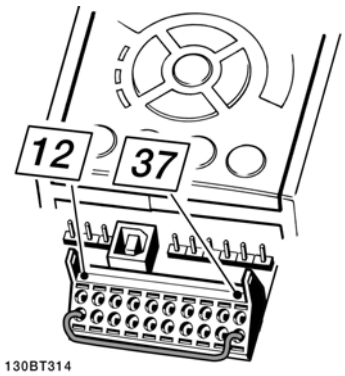

Figure 2.1: Bridge jumper between terminal 37 and 24 VDC

The figure below shows a Stopping Category 0 (EN 60204-1) with safety Category 3 (EN 954-1). The circuit interruption is caused by an opening door contact. The figure also shows how to connect a non-safety-related hardware coast.

2

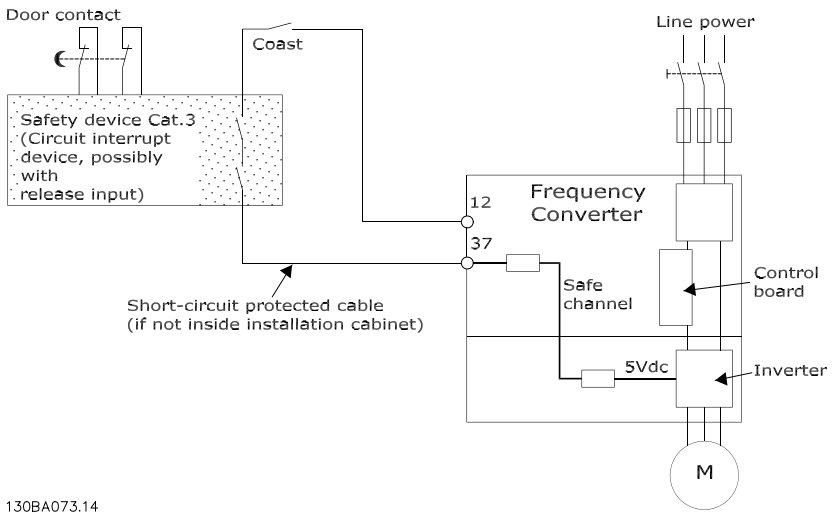

Figure 2.2: Figure of the essential aspects of an installation to achieve a Stopping Category 0 (EN 60204-1) with safety Category 3 (EN 954-1).

2.1.7 Safe Stop of the Adjustable Frequency Drive

For versions fitted with a Safe Stop terminal 37 input, the adjustable frequency drive can perform the safety function *Safe Torque Off* (As defined by draft CD IEC 61800-5-2) or *Stop Category 0* (as defined in EN 60204-1).

It is designed and approved suitable for the requirements of Safety Category 3 in EN 954-1. This functionality is called Safe Stop. Prior to integration and use of Safe Stop in an installation, a thorough risk analysis on the installation must be carried out in order to determine whether the Safe Stop functionality and safety category are appropriate and sufficient. In order to install and use the Safe Stop function in accordance with the requirements of Safety Category 3 in EN 954-1, the related information and instructions of the *Design Guide* must be followed. The information and instructions of the Instruction Manual are not sufficient for a correct and safe use of the safe stop functionality.

Prüf- und Zertifizierungsstelle
im BG-PRÜFZERT

BGIA
Berufsgenossenschaftliches Institut für Arbeitsschutz

Hauptverband der gewerblichen Berufsgenossenschaften

Translation
In any case, the German original shall prevail.

Type Test Certificate

05 06004
No. of certificate

Name and address of the holder of the certificate: (customer)	Danfoss Drives A/S, Ulnaes 1 DK-6300 Graasten, Dänemark
Name and address of the manufacturer:	Danfoss Drives A/S, Ulnaes 1 DK-6300 Graasten, Dänemark

Ref. of customer:	Ref. of Test and Certification Body: Apf/Köh VE-Nr. 2003 23220	Date of Issue: 13.04.2005

Product designation:	Frequency converter with integrated safety functions
Type:	VLT® Automation Drive FC 302
Intended purpose:	Implementation of safety function „Safe Stop"
Testing based on:	EN 954-1, 1997-03, DKE AK 226.03, 1998-06, EN ISO 13849-2; 2003-12, EN 61800-3, 2001-02, EN 61800-5-1, 2003-09,
Test certificate:	No.: 2003 23220 from 13.04.2005
Remarks:	The presented types of the frequency converter FC 302 meet the requirements laid down in the test bases. With correct wiring a category 3 according to DIN EN 954-1 is reached for the safety function.

The type tested complies with the provisions laid down in the directive 98/37/EC (Machinery).

Further conditions are laid down in the Rules of Procedure for Testing and Certification of April 2004.

130BA373.11

Head of certification body
(Prof. Dr. rer. nat. Dietmar Reinert)

Certification officer
(Dipl.-Ing. R. Apfeld)

PZB10E
01.05

Postal adress: 53754 Sankt Augustin
Office: Alte Heerstraße 111, 53757 Sankt Augustin
Phone: 0 22 41/2 31-02
Fax: 0 22 41/2 31-22 34

2

2.1.8 IT Line Power

IT line power

Do not connect adjustable frequency drives with RFI filters to line power supplies with a voltage between phase and ground of more than 440 V for 400 Vs and 760 V for 690 V drives.

For 400 V IT line power and delta ground (grounded leg), AC line voltage may exceed 440 V between phase and ground.

Par. 14-50 *RFI filter* can be used to disconnect the internal RFI capacitors from the RFI filter to ground. Par. 14-50 *RFI filter* on both the drive and the filter must be turned off.

2.1.9 Disposal Instructions

Equipment containing electrical components may not be disposed of together with domestic waste.

It must be separately collected with electrical and electronic waste according to local and currently valid legislation.

3 Introduction to the Low Harmonic Drive

3.1.1 Working Principle

The VLT Low Harmonic Drive is a VLT High Power adjustable frequency drive with an integrated active filter. An active filter is a device that actively monitors harmonic distortion levels and injects compensative harmonic current onto the line to cancel out the harmonics.

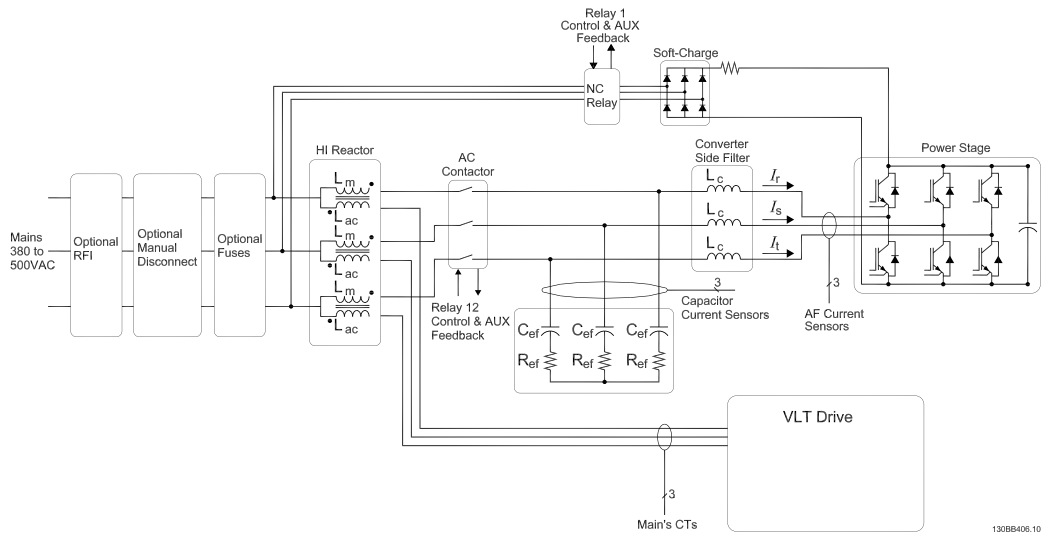

Figure 3.1: Basic layout for the Low Harmonic Drive

3.1.2 IEEE519 Compliance

Low harmonic drives are designed to draw an ideal sinusoidal current waveform from the supply grid with a power factor of 1. Where traditional non-linear load draws pulse-shaped currents, the low harmonic drive compensates for this via the parallel filter path which lowers the stress on the supply grid. The low harmonic drive meets the toughest harmonic standards and has a THiD of less then 5% at full load for <3% pre-distortion on a balanced three-phased grid. The unit is designed to meet IEEE519 recommendations for Isc/Il >20 for both uneven and even individual harmonic levels. The filter portion of a low harmonic drive has a progressive switching frequency which leads to a wide frequency spreads producing lower individual harmonic levels above the 50th.

3

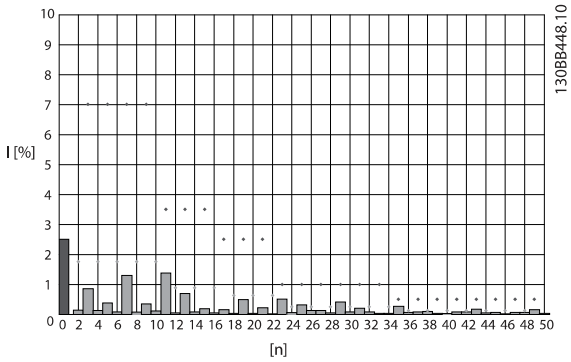

Figure 3.2: Typical harmonic frequency spectrum and THD value at the line power terminals of the drive
n = harmonic order
◇.....IEEE519 (Isc/IL>20) limits for individual harmonics

3.1.3 Ordering Form Type Code

It is possible to design a VLT Low Harmonic Drive according to the application requirements by using the ordering number system.

	1	2	3	4	5	6	7	8	9	10	11	12	13	14	15	16	17	18	19	20	21	22	23	24	25	26	27	28	29	30	31	32	33	34	35	36	37	38	39
	F	C	-		0		P				T		E			L			G	C		X	X	S	X	X	X	A		B		C						D	

130BB410.10

3

Product groups	1-3	
Adjustable frequency drive series	4-6	
Power rating	8-10	
Phases	11	
AC Line Voltage	12	
Enclosure	13-15	
Enclosure type		
Enclosure class		
Control supply voltage		
Hardware configuration		
RFI filter	16-17	
Brake	18	
Display (LCP)	19	
Coating PCB	20	
Line power option	21	
Adaptation A	22	
Adaptation B	23	
Software release	24-27	
Software language	28	
A options	29-30	
B options	31-32	
C0 options, MCO	33-34	
C1 options	**35**	
C option software	**36-37**	
D options	**38-39**	

To order a VLT Low Harmonic Drive, type the letter "L" in position 16 of the type code string. Not all choices/options are available for each adjustable frequency drive variant. To verify if the appropriate version is available, please consult the Drive Configurator on the Internet. For more information on the options available, please see the *Design Guide*.

4 How to Install

4.1 How to Get Started

4.1.1 About How to Install

This chapter covers mechanical and electrical installations to and from power terminals and control card terminals.
Electrical installation of *options* is described in the relevant Instruction Manual and Design Guide.

4.1.2 How to Get Started

The adjustable frequency drive is designed for quick installation and is EMC-compliant. Just follow the steps described below.

Read the safety instructions before installing the unit.
Failure to follow recommendations could result in death or serious injury.

Mechanical Installation

- Mechanical mounting

Electrical Installation

- Connection to Line and Protecting Ground
- Motor connection and cables
- Fuses and circuit breakers
- Control terminals - cables

Quick Setup

- Local Control Panel (LCP) of adjustable frequency drive
- Local Control Panel of filter
- Automatic Motor Adaptation, AMA
- Programming

Frame size is depending on enclosure type, power range and AC line voltage

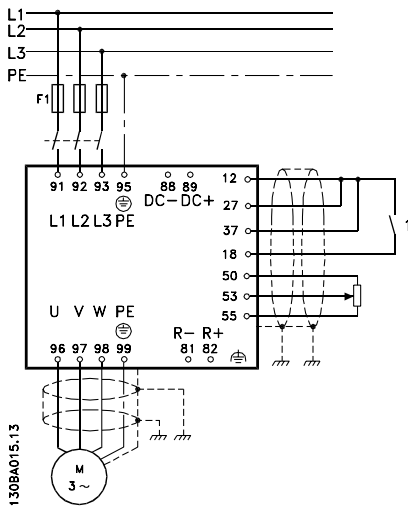

Figure 4.1: Diagram showing basic installation including line power, motor, start/stop key, and potentiometer for speed adjustment.

4.2 Pre-installation

4.2.1 Planning the Installation Site

NOTE!
Before performing the installation, it is important to plan the installation of the adjustable frequency drive. Neglecting this may result in extra work during and after installation.

4

Select the best possible operation site by considering the following (see details on the following pages and in the respective Design Guides):

- Ambient operating temperature
- Installation method
- How to cool the unit
- Position of the adjustable frequency drive.
- Cable routing
- Ensure the power source supplies the correct voltage and necessary current.
- Ensure that the motor current rating is within the maximum current from the adjustable frequency drive.
- If the adjustable frequency drive is without built-in fuses, ensure that the external fuses are rated correctly.

4.2.2 Receiving the Adjustable Frequency Drive

When receiving the adjustable frequency drive, make sure that the packaging is intact, and look for any damage that might have occurred to the unit during transport. If damage has occurred, immediately contact the shipping company to make a damage claim.

4.2.3 Transportation and Unpacking

Before unpacking the adjustable frequency drive, it is recommended to unload it as close as possible to the final installation site.
Remove the box and handle the adjustable frequency drive on the pallet, as long as possible.

4.2.4 Lifting

Always lift the adjustable frequency drive using the dedicated lifting holes. For all D and E frames, use a bar to avoid bending the lifting holes of the adjustable frequency drive.

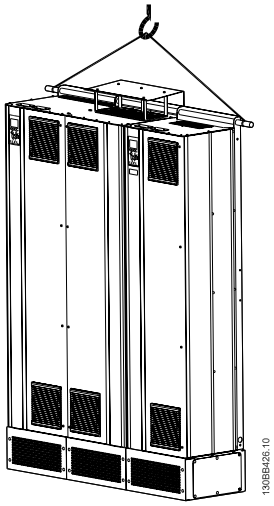

Figure 4.2: Recommended lifting method, frame sizes D and E.

The lifting bar must be able to handle the weight of the adjustable frequency drive. See *Mechanical Dimensions* for the weight of the different frame sizes. Maximum diameter for bar is 1 in [2.5 cm]. The angle from the top of the drive to the lifting cable should be 60° or greater.

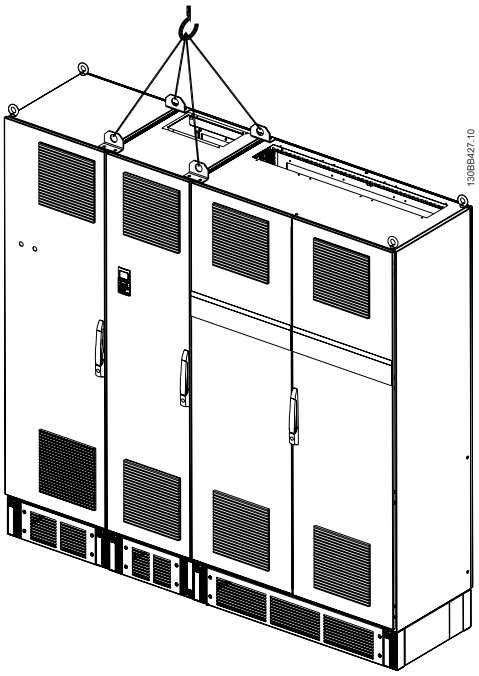

Figure 4.3: Recommended lifting method, frame size F - filter section.

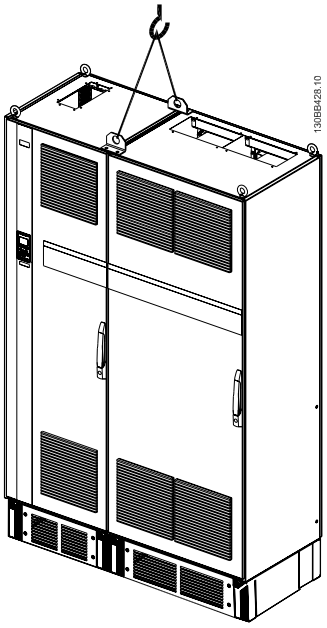

Figure 4.4: Recommended lifting method, frame size F - drive section.

NOTE!
Note the plinth is provided in the same packaging as the adjustable frequency drive but is not attached to frame size F during shipment. The plinth is required to allow airflow to the drive to provide proper cooling. The F frames should be positioned on top of the plinth in the final installation location. The angle from the top of the drive to the lifting cable should be 60° or greater.
In addition to the drawing above, a spreader bar is an acceptable way to lift the F frame.

NOTE!
The F size will be shipped as 2 pieces. Instructions on how to assemble the pieces can be found in the "Mechanical Installation" chapter.

4

4.2.5 Mechanical Dimensions

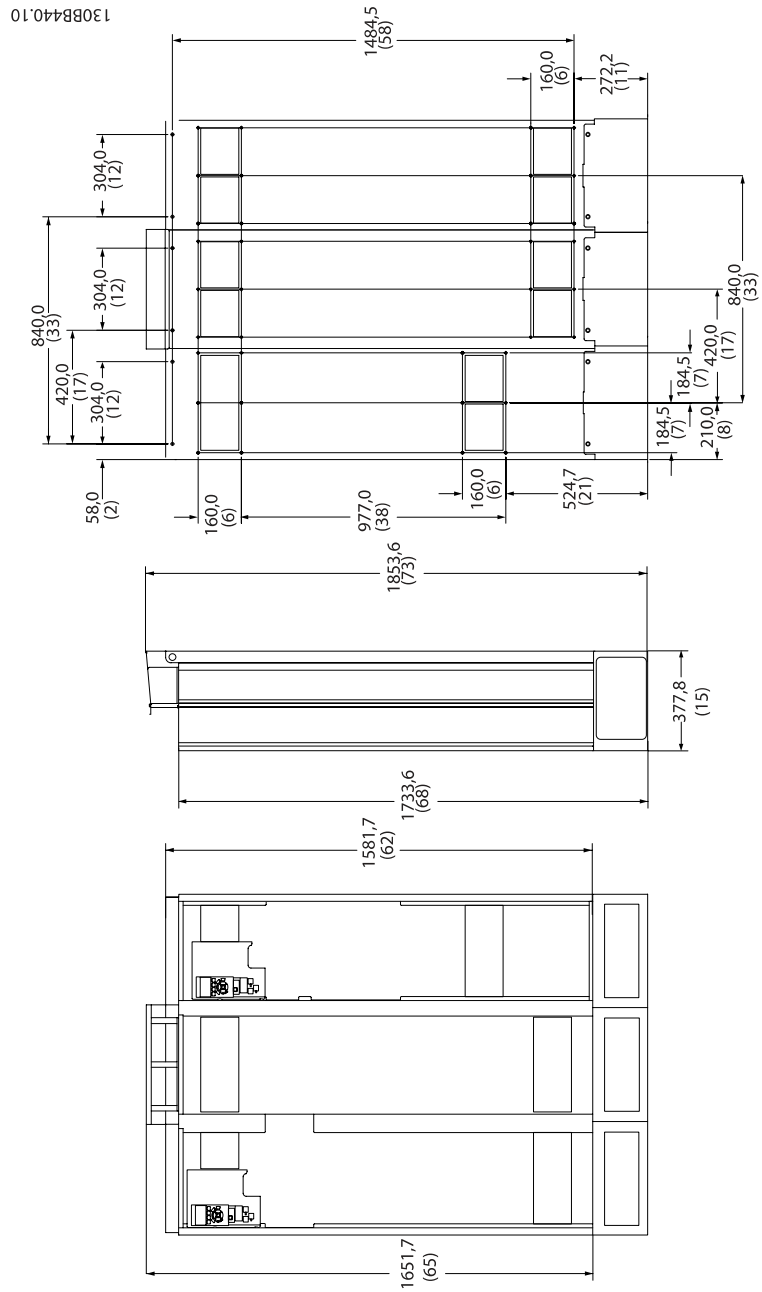

Figure 4.5: Frame size D11

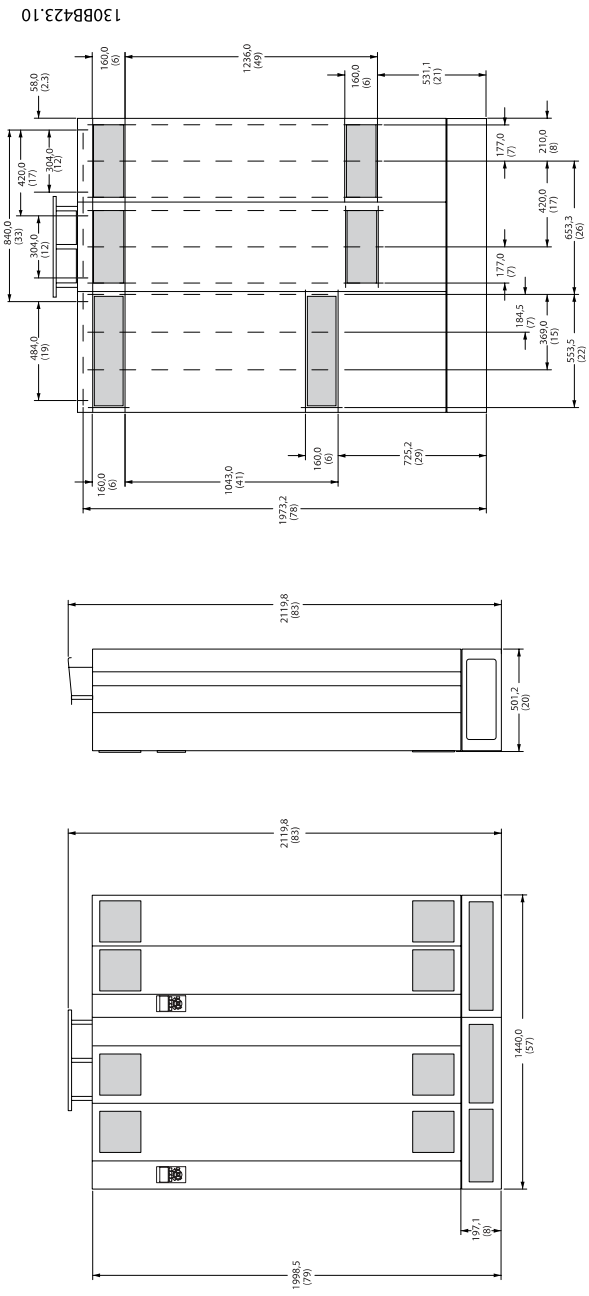

Figure 4.6: Frame size E7

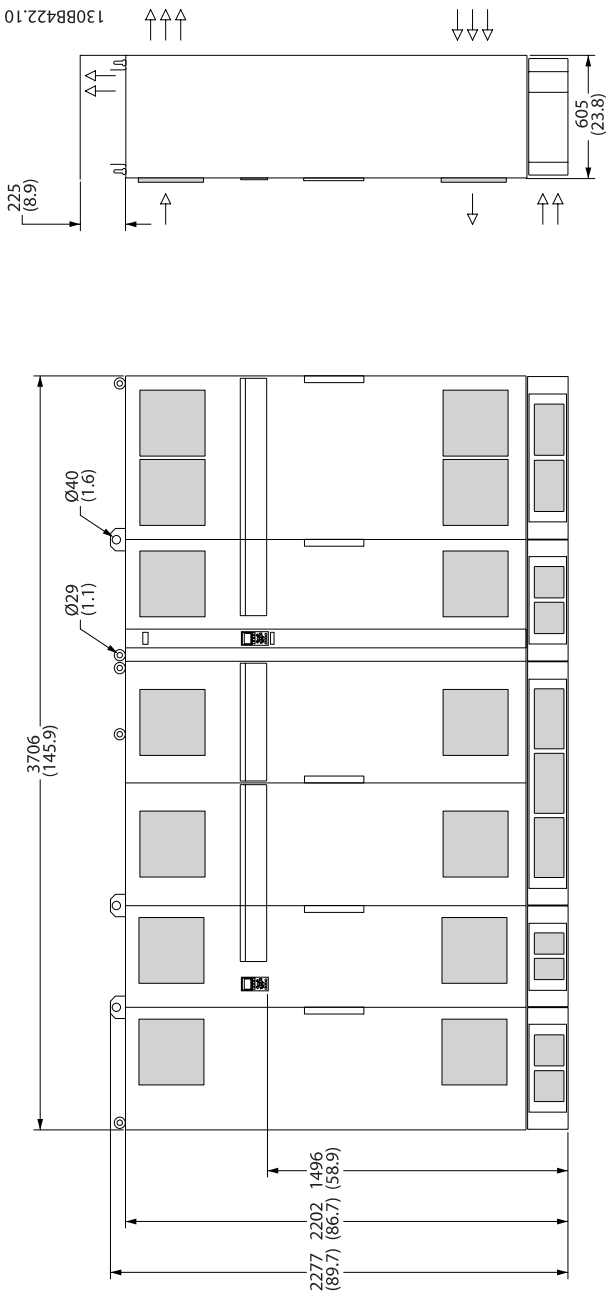

Figure 4.7: Frame size F17, front and side view

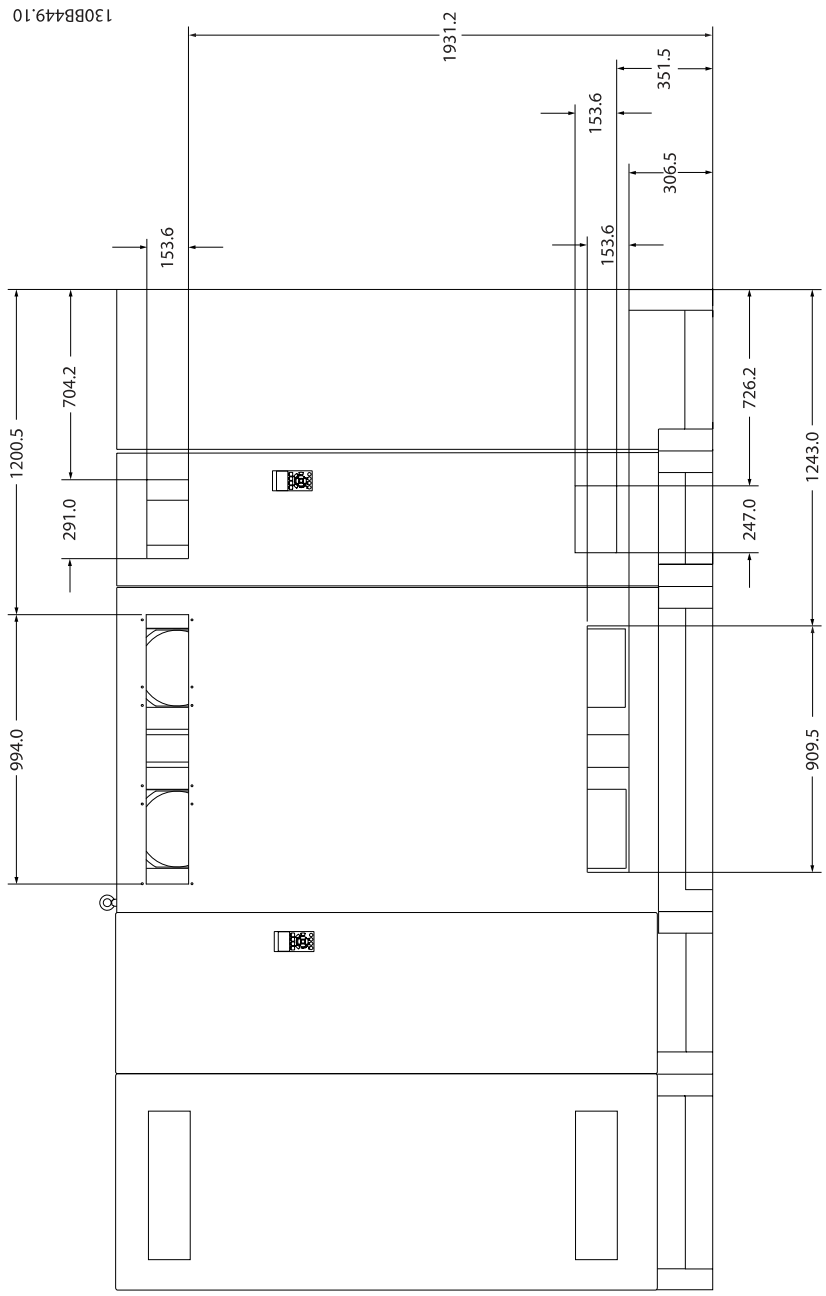

Figure 4.8: Frame size F17, back view

4

Mechanical Dimensions and Rated Power			
Frame size		**D11**	**E7**
			
Enclosure protection	IP	21/54*	21/54*
	NEMA	Type 1	Type 1
Normal overload rated power - 110% overload torque		250–350 HP [160–250 kW] at 400 V (380–480 V)	450–600 HP [315–450 kW] at 400 V (380–480 V)
Shipping Dimensions	Height	67.4 in [1712 mm]	76.5 in [1942 mm]
	Width	49.7 in [1261 mm]	56.7 in [1440 mm]
	Depth	40 in [1016 mm]	40 in [1016 mm]
Drive Dimensions	Height	68.9 in [1750 mm]	2000
	Width	49.6 in [1260 mm]	1440
	Depth	14.96 in [380 mm]	494
	Max Weight	895 lbs [406 kg]	1424 lbs [646 kg]

Frame size		F17
		
Enclosure protection	IP	21/54*
	NEMA	Type 1
Normal overload rated power - 110% overload torque		670–952 hp [500–710 kW] at 400 V (380–480 V)
Shipping Dimensions - filter section/ drive section	Height	2324/ 2324
	Width	2578/ 1569
	Depth	1130/ 1130
Drive Dimensions	Height	86.62 in [2200 mm]
	Width	145.7 in [3700 mm]
	Depth	23.62 in [600 mm]
	Max Weight	4410 lbs [2000 kg]

* Hybrid IP54 electronics, IP21 magnetics

4.3 Mechanical Installation

Preparation of the mechanical installation of the adjustable frequency drive must be done carefully to ensure proper results and to avoid additional work during installation. Start by taking a close look at the mechanical drawings at the end of this instruction manual to become familiar with the space demands.

4.3.1 Tools Needed

To perform the mechanical installation, the following tools are needed:

- Drill with 0.39 or 0.47 in [10 or 12 mm] drill.
- Tape measure
- Wrench with relevant metric sockets (7–17 mm)
- Extensions to wrench
- Sheet metal punch for conduits or cable connectors in IP 21/Nema 1 and IP 54 units
- Lifting bar to lift the unit (rod or tube max. Ø25 mm (1 inch), able to lift a minimum of 2204 lbs [1000 kg]).
- Crane or other lifting aid to place the adjustable frequency drive in position
- A Torx T50 tool is needed to install the E1 in IP21 and IP54 enclosure types.

4.3.2 General Considerations

Space

Ensure proper space above and below the adjustable frequency drive to allow airflow and cable access. In addition, space in front of the unit must be considered to allow the panel door to be opened.

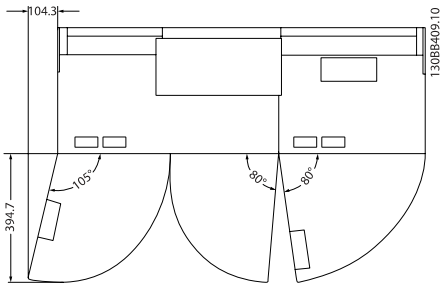

Figure 4.9: Space in front of IP21/IP54 enclosure type, frame size D11.

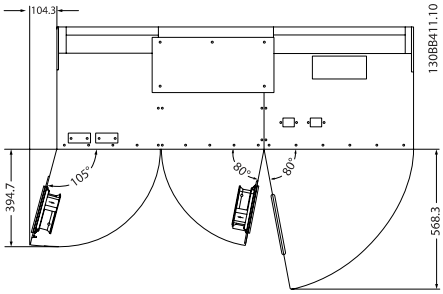

Figure 4.10: Space in front of IP21/IP54 enclosure type, frame size E7.

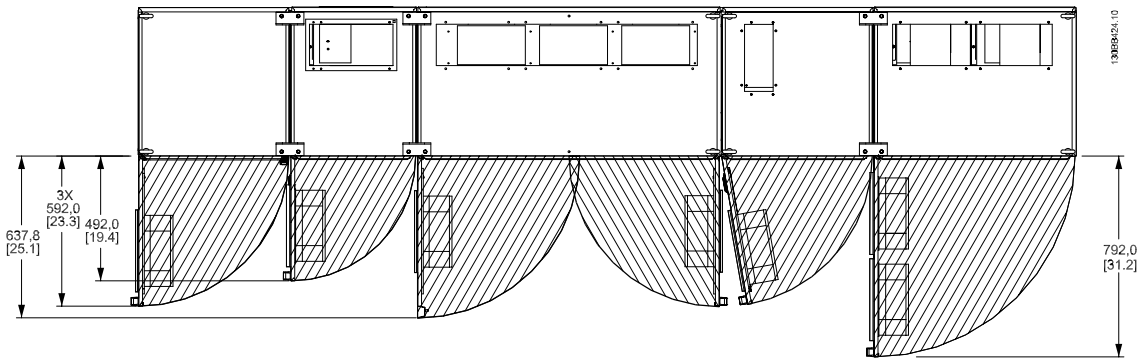

Figure 4.11: Space in front of IP21/IP54 enclosure type, frame size F17.

Wire access

Ensure that proper cable access is present including the necessary bending allowance.

NOTE!

All cable lugs/shoes must mount within the width of the terminal bus bar.

4.3.3 Assembly of F Frame Sections

Procedure to attach F frame drive and filter sections together

1. Position filter and drive sections in proximity to one another. The filter section will attach to the left side of the drive section.
2. Open the rectifier section door and remove the cover shielding the bus bars.

3. Apply included gasket to indicated surface on cabinet.

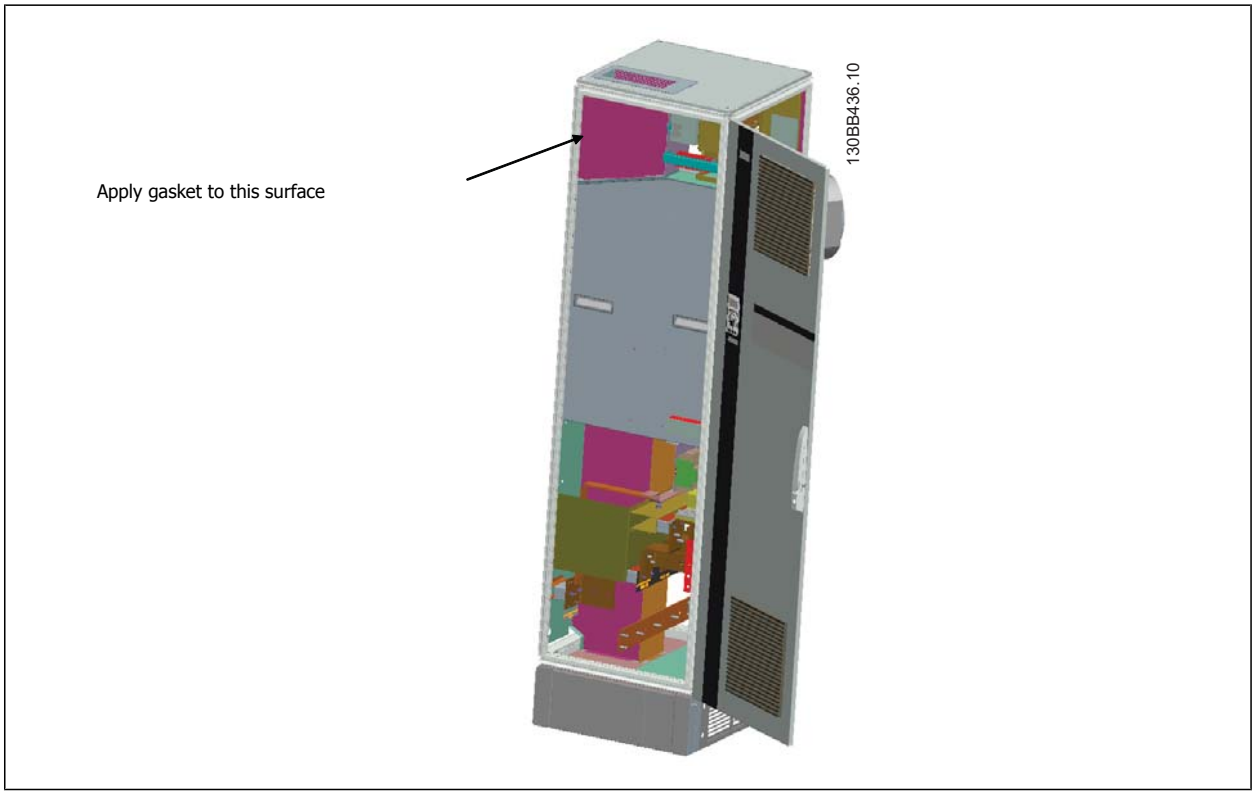

4. Open doors on LCL side of filter, right most cabinet, and remove indicated shields.

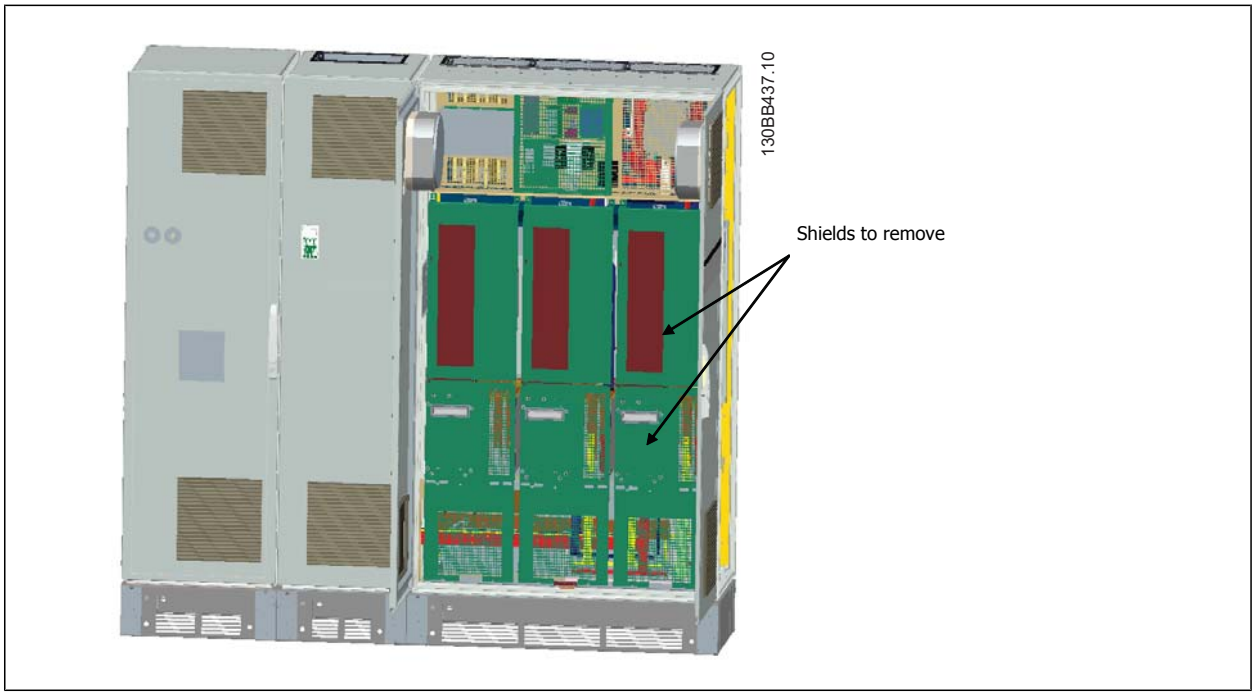

5. Remove indicated inductor module.

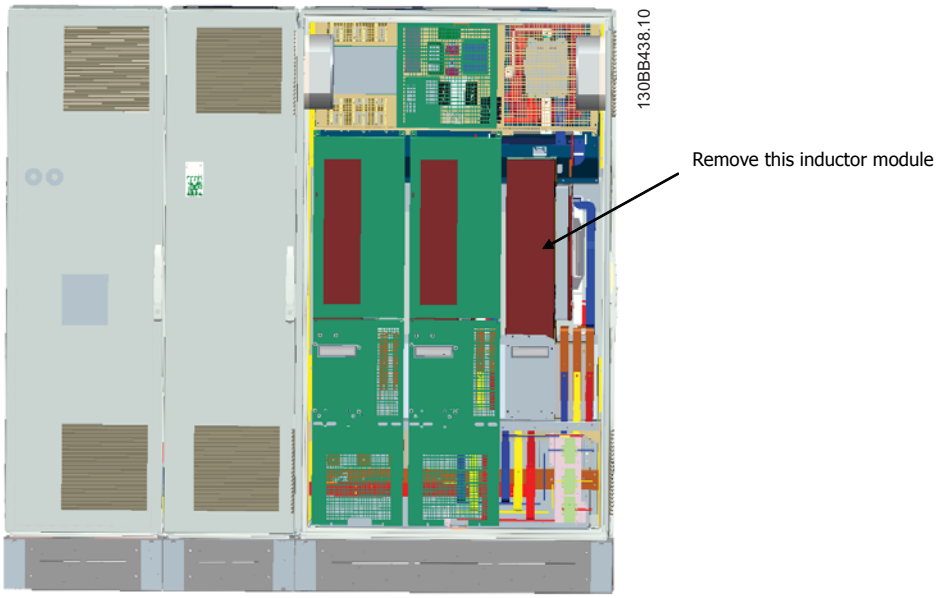

6. After the inductor module is removed, the filter and drive sections can be attached to one another. Four corner brackets and six side brackets will be required for this operation. They will be included in a bag with the appropriate screws. After the internal brackets are installed, the two top "L" shaped brackets will be installed to act as load points for moving the complete assembly.
7. Once all the brackets have been installed, the inductor module can be reassembled to its previous location.
8. Now the three line power bus bars, included in as a kit with the drive, can be attached from the filter section to the rectifier section.

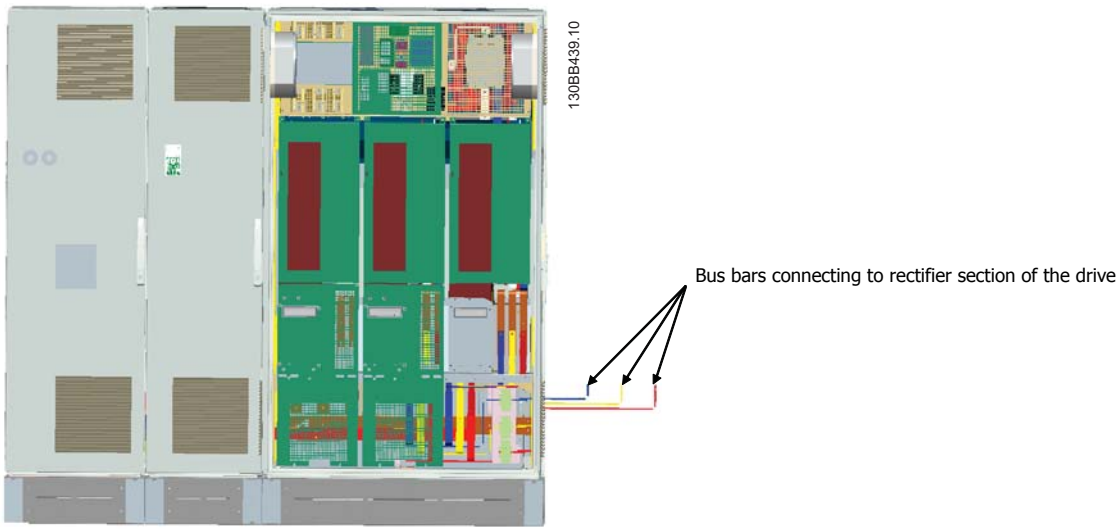

9. Once the line power bus bars are connected, the lower covers on both the LCL and rectifier sections can be reinstalled.
10. A control wire connection will need to be made between the filter section and the drive section. It will consist of two connectors which will plug into one another near the upper shelf of the LCL cabinet. See description below.
11. The doors can now be closed and locked. The drive is ready for operation.

4.3.4 Control Wire Connection between Drive and Filter

In order to make the filter start when the drive starts, the control cards of the different sections are connected. For D and E frames these connections and the corresponding programming of the drive are already made at the factory. After assembling the two sections of the F frame, the following connections must be made:

1. Connect terminal 20 on the filter control card to terminal 20 on the drive control card. For information on how to connect control wires, see the *Electrical Installation* chapter.
2. Connect terminal 18 on the filter to terminal 29 on the drive.
3. Set par. 502 *Terminal 29 Mode* on the drive LCP to [1], Output. See chapter *How to Operate the Low Harmonic Drive* for information on how to use the LCP.
4. Set par. 5-31, *Terminal 29 Digital Output* to [5] VLT Running.
5. Push the Auto ON button on the filter LCP

NOTE!
For D and E frames this procedure is not necessary upon reception of the unit. However, if a factory reset is performed, the unit must be reprogrammed as specified above.

4.3.5 Terminal Locations - Frame size D

Take the following terminal positions into consideration when you design for cable access.

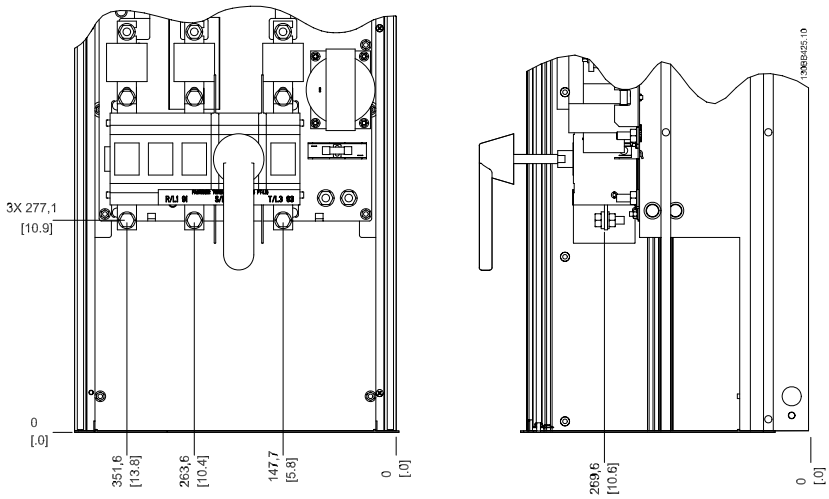

Figure 4.12: Terminal locations D6 - filter

Section shown

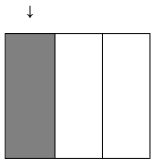

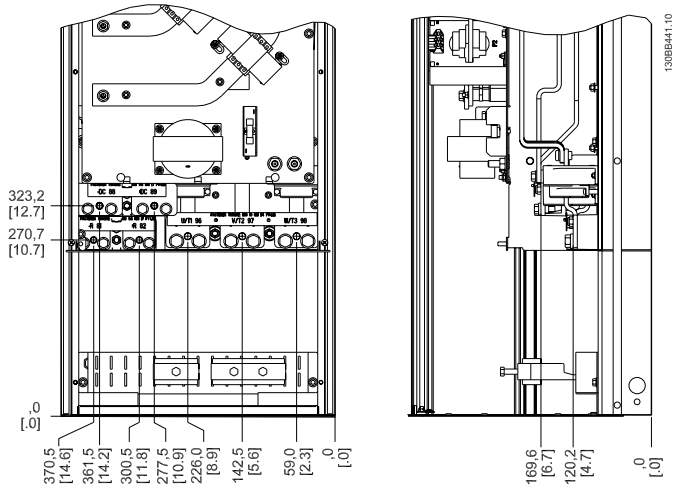

Figure 4.13: Terminal locations D6 - drive

Section shown

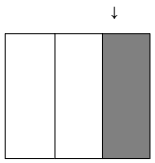

Be aware that the power cables are heavy and hard to bend. Give thought to the optimum position of the adjustable frequency drive for ensuring easy installation of the cables.

NOTE!

All D frames are available with standard input terminals or disconnect switch

4.3.6 Terminal Locations - Frame size E

Give thought to the following terminal positions when designing the cable access.

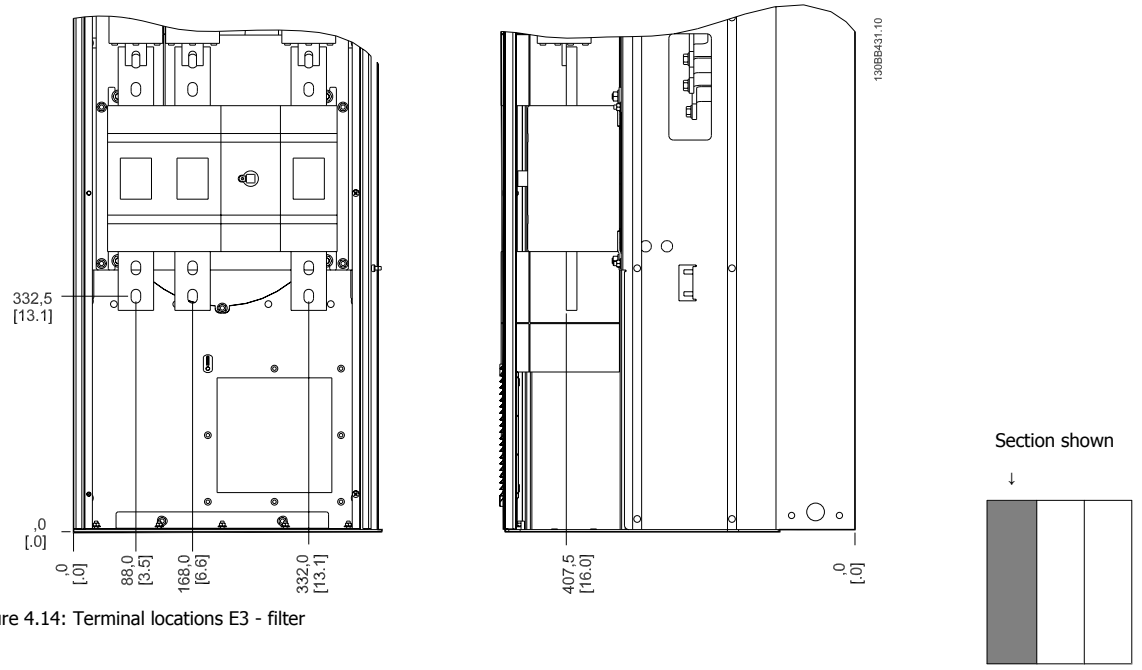

Figure 4.14: Terminal locations E3 - filter

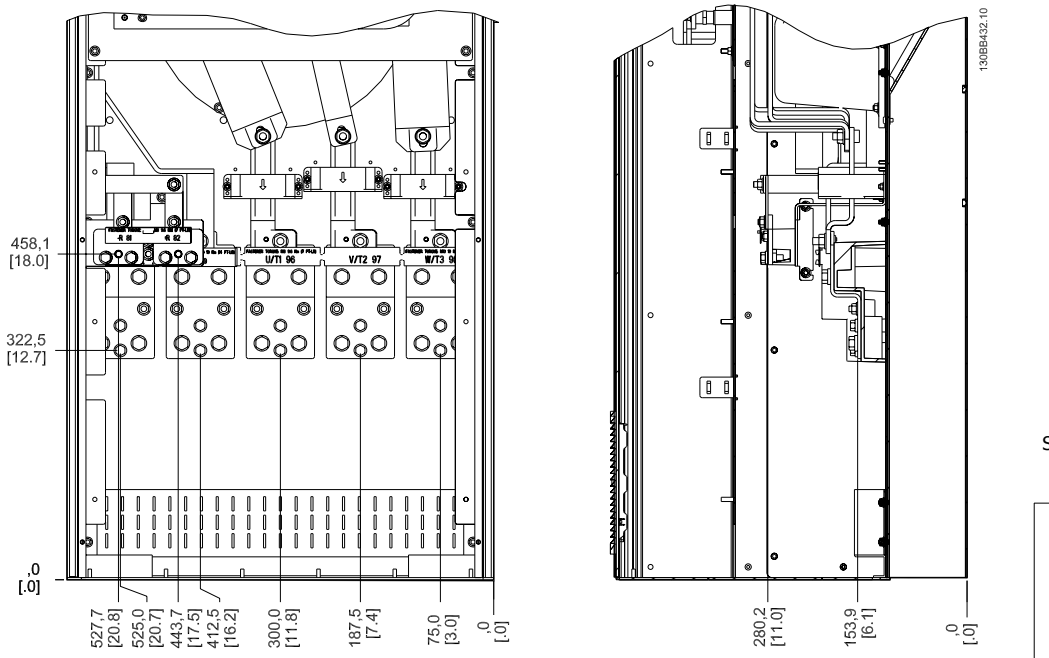

Figure 4.15: Terminal locations E6 - drive

Note that the power cables are heavy and difficult to bend. Give thought to the optimum position of the adjustable frequency drive for ensuring easy installation of the cables.

Each terminal allows for the use of up to 4 cables with cable lugs or the use of standard box lug. Ground is connected to relevant termination point in the drive.

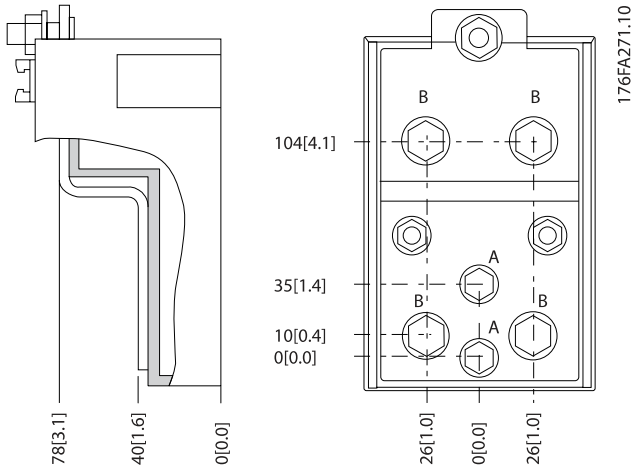

Figure 4.16: Terminal in details

NOTE!
Power connections can be made to positions A or B

4.3.7 Terminal Locations - Frame size F

Terminal locations - Filter

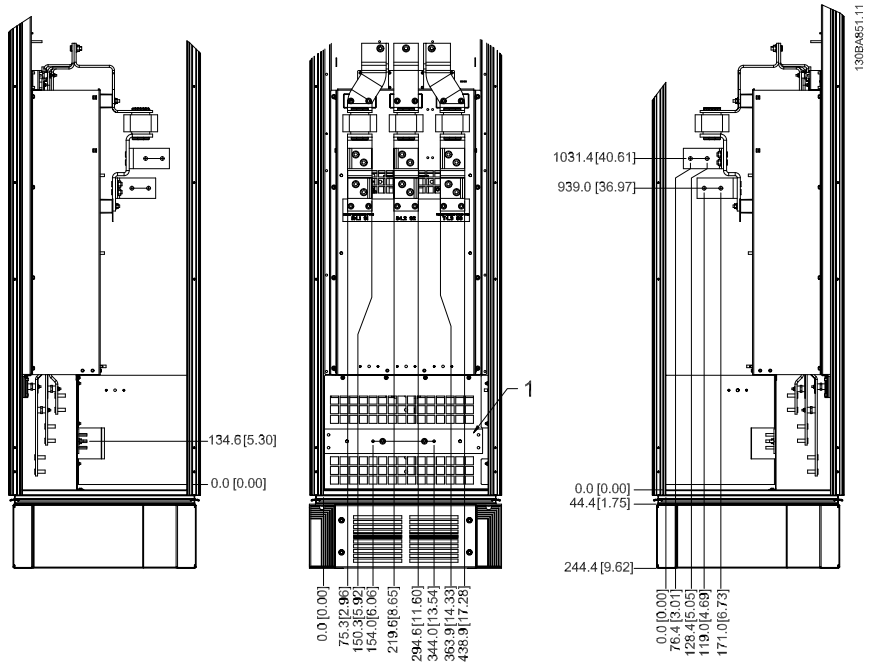

Figure 4.17: Terminal locations - Filter (left side, front and right side view). The connector plate is 1.65 in [42 mm] below .0 level.
1) Ground bar

Section shown
↓

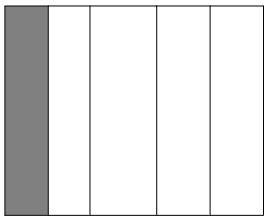

4

Terminal locations - Rectifier

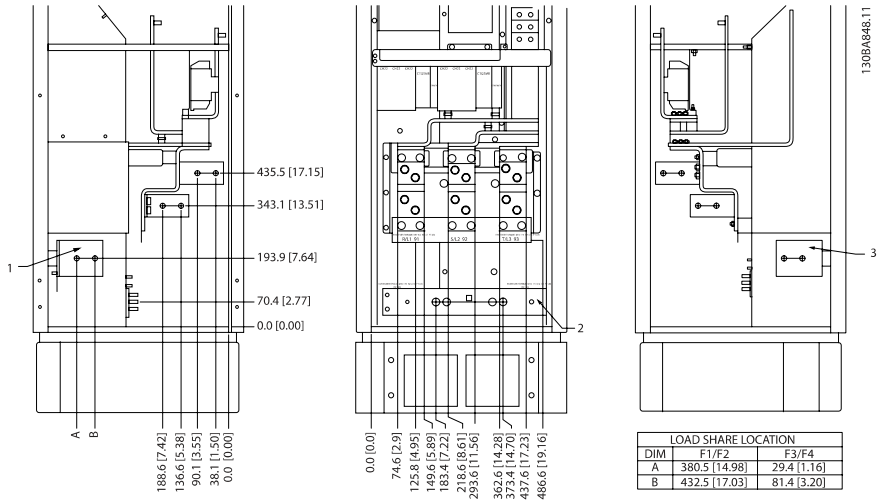

LOAD SHARE LOCATION		
DIM	F1/F2	F3/F4
A	380.5 [14.98]	29.4 [1.16]
B	432.5 [17.03]	81.4 [3.20]

Figure 4.18: Terminal locations - Rectifier (left side, front and right side view). The connector plate is 1.65 in [42 mm] below .0 level.

1) Load Share Terminal (-)

2) Ground bar

3) Load Share Terminal (+)

Section shown

↓

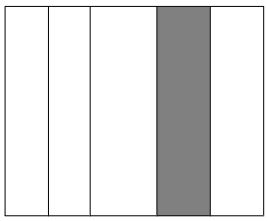

Terminal locations - Inverter

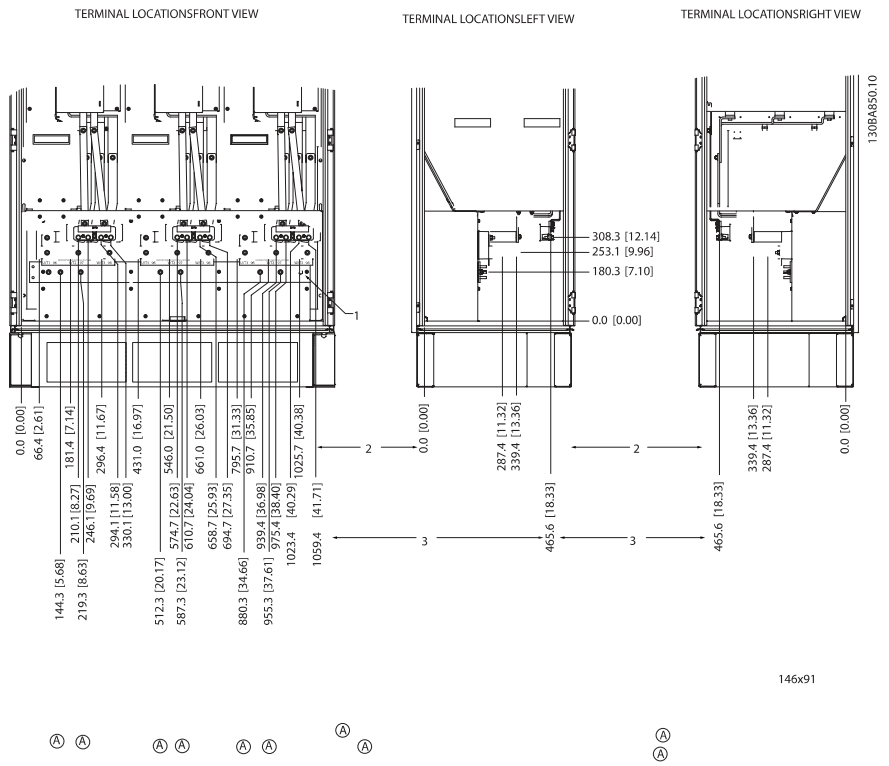

Figure 4.19: Terminal locations - Inverter Cabinet (front, left and right side view). The connector plate is 1.65 in [42 mm] below .0 level.

1) Ground bar
2) Motor terminals
3) Brake terminals

Section shown

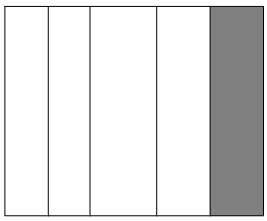

4.3.8 Cooling and Airflow

Cooling

Cooling can be obtained in different ways, by using the cooling ducts in the bottom and the top of the unit, by taking air in and out the back of the unit or by combining the cooling possibilities.

Back cooling

The backchannel air can also be ventilated in and out the back of a Rittal TS8 enclosure. This offers a solution where the backchannel could take air from outside the facility and return the heat losses outside the facility thus reducing air-conditioning requirements.

NOTE!
A door fan is required on the enclosure to remove the heat losses not contained in the backchannel of the drive and any additional losses generated from other components installed inside the enclosure. The total required air flow must be calculated so that the appropriate fans can be selected. Some enclosure manufacturers offer software for performing the calculations (i.e., Rittal Therm software).

Airflow
The necessary airflow over the heatsink must be ensured. The flow rate is shown below.

Enclosure protection	Frame size	Door fan(s) / Top fan airflow Total airflow of multiple fans	Heatsink fan(s) Total airflow of multiple fans
IP21 / NEMA 1	D11	510 m^3/h (300 cfm)	2295 m^3/h (1350 cfm)
IP54 / NEMA 12	E7 P315	680 m^3/h (400 cfm)	2635 m^3/h (1550 cfm)
	E7 P355-P450	680 m^3/h (400 cfm)	2975 m^3/h (1750 cfm)
IP21 / NEMA 1	F17	4900 m^3/h (2884 cfm)	6895 m^3/h (4060 cfm)

Table 4.1: Heatsink Air Flow

NOTE!
For the drive section, the fan runs for the following reasons:

1. AMA
2. DC Hold
3. Pre-Mag
4. DC Brake
5. 60% of nominal current is exceeded
6. Specific heatsink temperature exceeded (power size dependent)
7. Specific Power Card ambient temperature exceeded (power size-dependent)
8. Specific Control Card ambient temperature exceeded

Once the fan is started, it will run for a minimum of 10 minutes.

NOTE!
For the active filter, the fan runs for the following reasons:

1. Active filter running
2. Active filter not running, but line power current exceeding limit (power size dependent)
3. Specific heatsink temperature exceeded (power size dependent)
4. Specific Power Card ambient temperature exceeded (power size-dependent)
5. Specific Control Card ambient temperature exceeded

Once the fan is started, it will run for a minimum of 10 minutes.

External ducts

If additional duct work is added externally to the Rittal cabinet, the pressure drop in the ducting must be calculated. Use the charts below to derate the adjustable frequency drive according to the pressure drop.

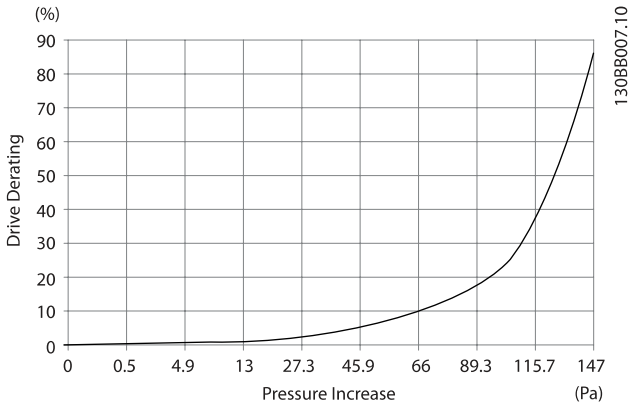

Figure 4.20: D frame Derating vs. Pressure Change

Drive air flow: 450 cfm (765 m^3/h)

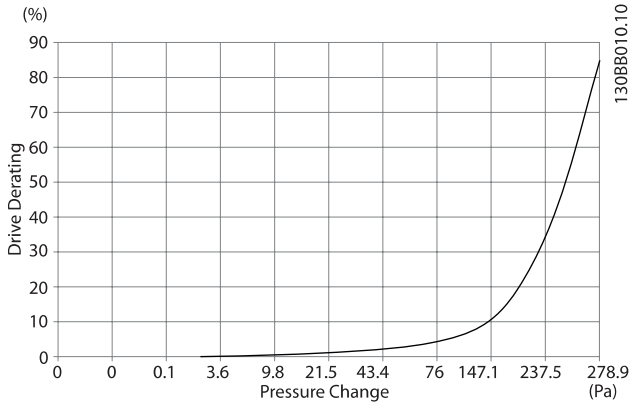

Figure 4.21: E frame Derating vs. Pressure Change (Small Fan), P315

Drive air flow: 650 cfm (1105 m^3/h)

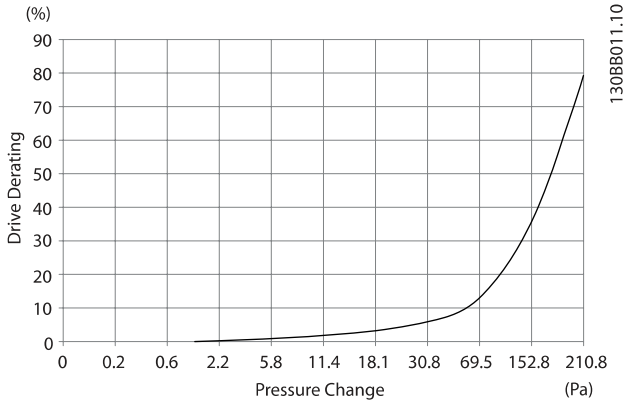

Figure 4.22: E frame Derating vs. Pressure Change (Large Fan) P355-P450

Drive air flow: 850 cfm (1445 m^3/h)

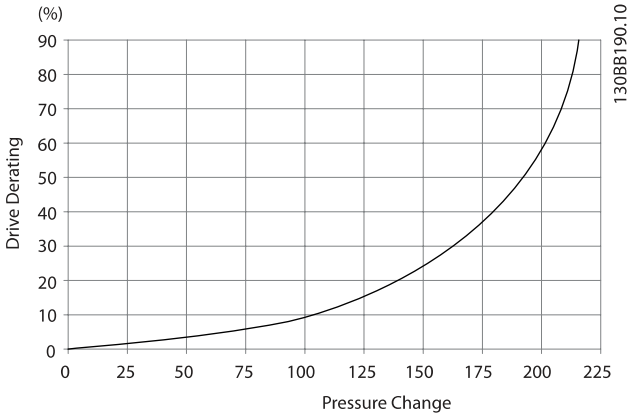

Figure 4.23: F frame Derating vs. Pressure Change

Drive air flow: 580 cfm (985 m^3/h)

4.3.9 Connector/Conduit Entry - IP21 (NEMA 1) and IP54 (NEMA12)

Cables are connected through the gland plate from the bottom. Remove the plate and plan where to place the entry for the connectors or conduits. Prepare holes in the marked area on the drawing.

NOTE!
The connector plate must be fitted to the adjustable frequency drive to ensure the specified protection degree, as well as ensuring proper cooling of the unit. If the connector plate is not mounted, the adjustable frequency drive may trip on Alarm 69, Pwr. Card Temp

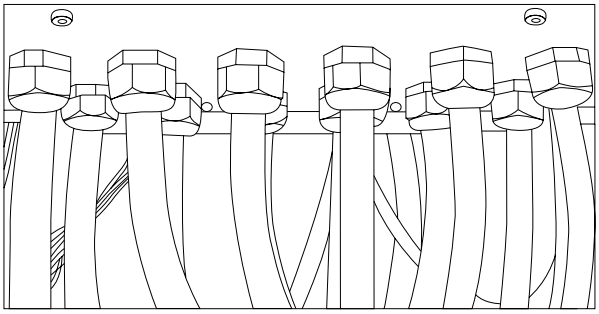

Figure 4.24: Example of proper installation of the gland plate.

Frame size D11

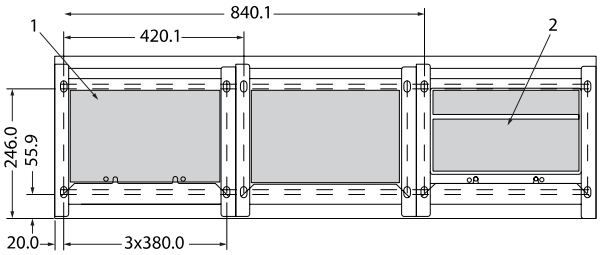

Frame size E7

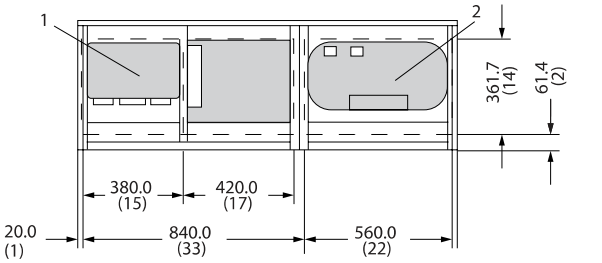

Cable entries viewed from the bottom of the adjustable frequency drive

1) Line cable connection

2) Motor cable connection

Frame size F17

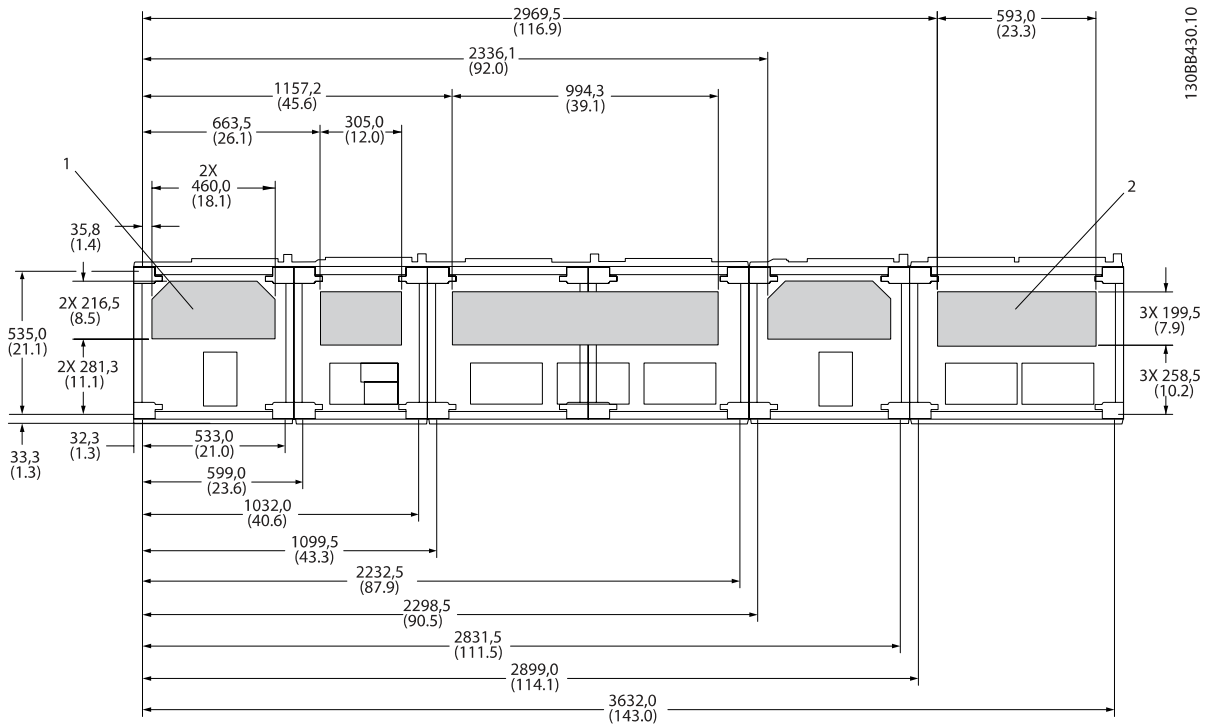

F17: Cable entries viewed from the bottom of the adjustable frequency drive

1) Line cable connection

2) Motor cable connection

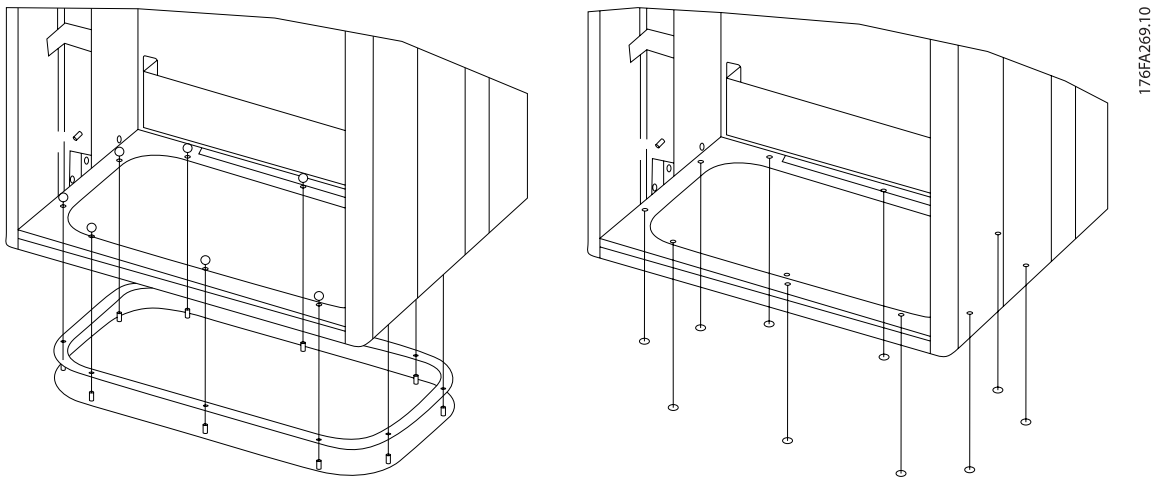

Figure 4.25: Mounting of bottom plate, E7

The bottom plate of the E frame can be mounted from either inside or outside of the enclosure, allowing flexibility in the installation process, i.e., if mounted from the bottom the connectors and cables can be mounted before the adjustable frequency drive is placed on the pedestal.

4.3.10 IP21 Drip Shield Installation (Frame size D)

To comply with the IP21 rating, a separate drip shield is to be installed as explained below:

- Remove the two front screws.
- Insert the drip shield and replace the screws.
- Torque the screws to 5.6 Nm (50 in-lbs).

NOTE!
Drip shield is necessary on both filter and drive section.

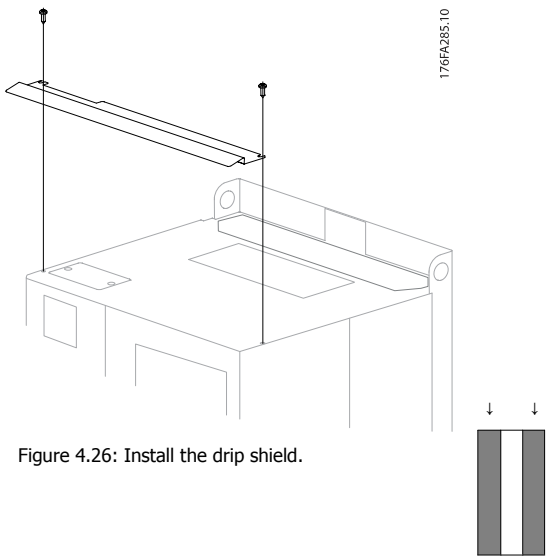

Figure 4.26: Install the drip shield.

4.4 Field Installation of Options

4.4.1 Installation of Input Plate Options

This section is for the field installation of input option kits available for adjustable frequency drives in all D and E frames.
Do not attempt to remove RFI filters from input plates. Damage may occur to RFI filters if they are removed from the input plate.

NOTE!
Where RFI filters are available, there are two different types of RFI filters depending on the input plate combination and the RFI filters interchangeable. Field installable kits in certain cases are the same for all voltages.

	380–480 V 380–500 V	Fuses	Disconnect Fuses	RFI	RFI Fuses	RFI Disconnect Fuses
D11		176F8443	176F8441	176F8445	176F8449	176F8447
E7	FC 102/ 202: 450 hp [315 kW] FC 302: 335 hp [250 kW]	176F0253	176F0255	176F0257	176F0258	176F0260
	FC 102/ 202: 500–600 hp [355–450 kW] FC 302: 450–550 hp [315–400 kW]	176F0254	176F0256	176F0257	176F0259	176F0262

NOTE!
For further information, please see the Instruction Sheet, *175R5795*

4.4.2 Installation of Line Power Shield for Adjustable Frequency Drives

The line power shield is for installation with D and E frames and satisfy BG-4 requirements.

Ordering numbers:
D frames: 176F0799
E frames: 176F1851

NOTE!
For further information, please see the Instruction Sheet, *175R5923*

4.5 Frame size F Panel Options

Space Heaters and Thermostat

Mounted on the cabinet interior of frame size F adjustable frequency drives, space heaters controlled via automatic thermostat help control humidity inside the enclosure, extending the lifetime of drive components in damp environments. The thermostat default settings turn on the heaters at 10°C (50°F) and turn them off at 15.6°C (60°F).

Cabinet Light with Power Outlet

A light mounted on the cabinet interior of frame size F adjustable frequency drives increase visibility during servicing and maintenance. The housing light includes a power outlet for temporarily powering tools or other devices, available in two voltages:

- 230 V, 50 Hz, 2.5 A, CE/ENEC
- 120 V, 60 Hz, 5 A, UL/cUL

Transformer Tap Set-up

If the Cabinet Light & Outlet and/or the Space Heaters & Thermostat are installed Transformer T1 requires it taps to be set to the proper input voltage. A 380–480/500 V380–480 V drive will initially be set to the 525 V tap and a 525–690 V drive will be set to the 690 V tap to insure no overvoltage of secondary equipment occurs if the tap is not changed prior to power being applied. See the table below to set the proper tap at terminal T1 located in the rectifier cabinet. For location in the drive, see figure of rectifier in the *Power Connections* section.

Input Voltage Range	Tap to Select
380–440 V	400V
441–490 V	460V

NAMUR Terminals

NAMUR is an international association of automation technology users in process industries, primarily in the chemical and pharmaceutical industries, in Germany. Selection of this option provides terminals organized and labeled to the specifications of the NAMUR standard for drive input and output terminals. This requires MCB 112 PTC Thermistor Card and MCB 113 Extended Relay Card.

RCD (Residual Current Device)

Uses the core balance method to monitor ground fault currents in grounded and high-resistance grounded systems (TN and TT systems in IEC terminology). There is a pre-warning (50% of main alarm setpoint) and a main alarm setpoint. Associated with each setpoint is an SPDT alarm relay for external use. Requires an external "window-type" current transformer (supplied and installed by customer).

- Integrated into the drive's safe-stop circuit
- IEC 60755 Type B device monitors AC, pulsed DC, and pure DC ground fault currents
- LED bar graph indicator of the ground fault current level from 10–100% of the setpoint
- Fault memory
- TEST / RESET button

Insulation Resistance Monitor (IRM)

Monitors the insulation resistance in ungrounded systems (IT systems in IEC terminology) between the system phase conductors and ground. There is an ohmic pre-warning and a main alarm setpoint for the insulation level. Associated with each setpoint is an SPDT alarm relay for external use. Note: only one insulation resistance monitor can be connected to each ungrounded (IT) system.

- Integrated into the drive's safe-stop circuit
- LCD display of the ohmic value of the insulation resistance
- Fault Memory
- INFO, TEST, and RESET buttons

IEC Emergency Stop with Pilz Safety Relay

Includes a redundant 4-wire emergency stop pushbutton mounted on the front of the enclosure and a Pilz relay that monitors it in conjunction with the drive's safe stop circuit and the line power contactor located in the options cabinet.

Manual Motor Starters

Provide 3-phase power for electric blowers often required for larger motors. Power for the starters is provided from the load side of any supplied contactor, circuit breaker, or disconnect switch. Power is fused before each motor starter, and is off when the incoming power to the drive is off. Up to two starters are allowed (one if a 30 A, fuse-protected circuit is ordered). Integrated into the drive's safe-stop circuit.

Unit features include:

- Operation switch (on/off)
- Short-circuit and overload protection with test function
- Manual reset function

30 Ampere, Fuse-protected Terminals

- 3-phase power matching incoming AC line voltage for powering auxiliary customer equipment
- Not available if two manual motor starters are selected
- Terminals are off when the incoming power to the drive is off
- Power for the fused protected terminals will be provided from the load side of any supplied contactor, circuit breaker, or disconnect switch.

24 VDC Power Supply

- 5 amp, 120 W, 24 VDC
- Protected against output overcurrent, overload, short circuits, and overtemperature
- For powering customer-supplied accessory devices such as sensors, PLC I/O, contactors, temperature probes, LEDs, and/or other electronic hardware
- Diagnostics include a dry DC-ok contact, a green DC-ok LED, and a red overload LED

External Temperature Monitoring

Designed for monitoring temperatures of external system components, such as the motor windings and/or bearings. Includes eight universal input modules plus two dedicated thermistor input modules. All ten modules are integrated into the drive's safe stop circuit and can be monitored via a serial communication bus network (requires the purchase of a separate module/bus coupler).

Universal inputs (8)

Signal types:

- RTD inputs (including Pt100), 3-wire or 4-wire
- Thermocouple
- Analog current or analog voltage

Additional features:

- One universal output, configurable for analog voltage or analog current
- Two output relays (N.O.)
- Dual-line LC display and LED diagnostics
- Sensor lead wire break, short-circuit, and incorrect polarity detection
- Interface set-up software

Dedicated thermistor inputs (2)

Features:

- Each module is capable of monitoring up to six thermistors in a series
- Fault diagnostics for wire breakage or short-circuits of sensor leads
- ATEX/UL/CSA certification
- A third thermistor input can be provided by the PTC thermistor option card MCB 112, if necessary.

4.6 Electrical Installation

4.6.1 Power Connections

Cabling and Fusing

NOTE!

Cables General

All cabling must comply with national and local regulations on cable cross-sections and ambient temperature. UL applications require 167°F [75°C] copper conductors. 167°F [75°C] and 194°F [90°C] copper conductors are thermally acceptable for the adjustable frequency drive to use in non-UL applications.

The power cable connections are situated as shown below. Dimensioning of cable cross-section must be done in accordance with the current ratings and local legislation. See the *Specifications section* for details.

For protection of the adjustable frequency drive, the recommended fuses must be used or the unit must be with built-in fuses. Recommended fuses can be seen in the tables of the fuse section. Always ensure that proper fusing is done according to local regulations.

The AC line input connections are fitted to the line power switch if this is included.

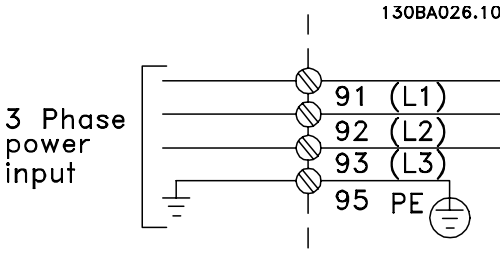

NOTE!

To comply with EMC emission specifications, shielded/armored cables are recommended. If a non-shielded/unarmored cable is used, see section *Power and Control Wiring for Non-shielded Cables*.

See section General Specifications for correct dimensioning of motor cable cross-section and length.

Shielding of cables:

Avoid installation with twisted shield ends (pigtails). They spoil the shielding effect at higher frequencies. If it is necessary to break the shield to install a motor isolator or motor contactor, the shield must be continued at the lowest possible HF impedance.

Connect the motor cable shield to both the de-coupling plate of the adjustable frequency drive and to the metal housing of the motor.

Make the shield connections with the largest possible surface area (cable clamp). This is done by using the supplied installation devices within the adjustable frequency drive.

Cable-length and cross-section:

The adjustable frequency drive has been EMC tested with a given length of cable. Keep the motor cable as short as possible to reduce the noise level and leakage currents.

Switching frequency:

When adjustable frequency drives are used together with sine-wave filters to reduce the acoustic noise from a motor, the switching frequency must be set according to the instructions in par. 14-01 *Switching Frequency*.

Term. no.	96	97	98	99	
	U	V	W	PE[1)]	Motor voltage 0–100% of AC line voltage. 3 wires out of motor
	U1 W2	V1 U2	W1 V2	PE[1)]	Delta-connected 6 wires out of motor
	U1	V1	W1	PE[1)]	Star-connected U2, V2, W2 U2, V2 and W2 to be interconnected separately.

1)Protected Ground Connection

NOTE!

In motors without phase insulation paper or other insulation reinforcement suitable for operation with voltage supply (such as a adjustable frequency drive), fit a sine-wave filter on the output of the adjustable frequency drive.

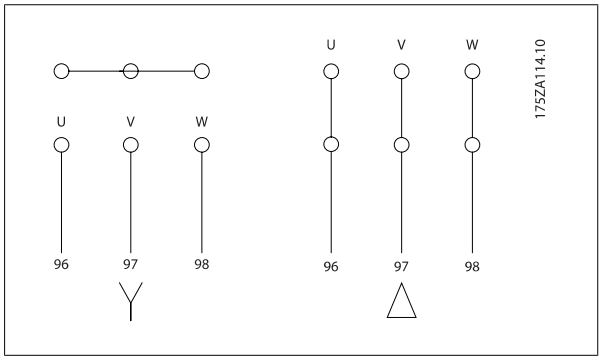

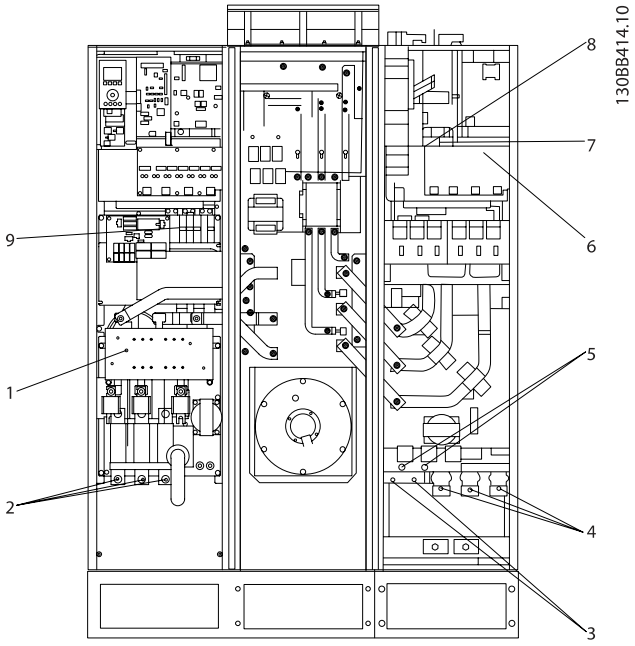

Figure 4.27: Frame size D11

1) RFI
2) Line
   R S T
   L1 L2 L3
3) Brake option
   -R +R
   81 82
4) Motor
   U V W
   96 97 98
   T1 T2 T3
5) Load sharing option
   -DC +DC
   88 89
6) AUX Fan
   100 101 102 103
   L1 L2 L1 L2
7) Temp Switch
   106 104 105
8) AUX Relay
   01 02 03
   04 05 06
9) Fan/SMPS fuse

4

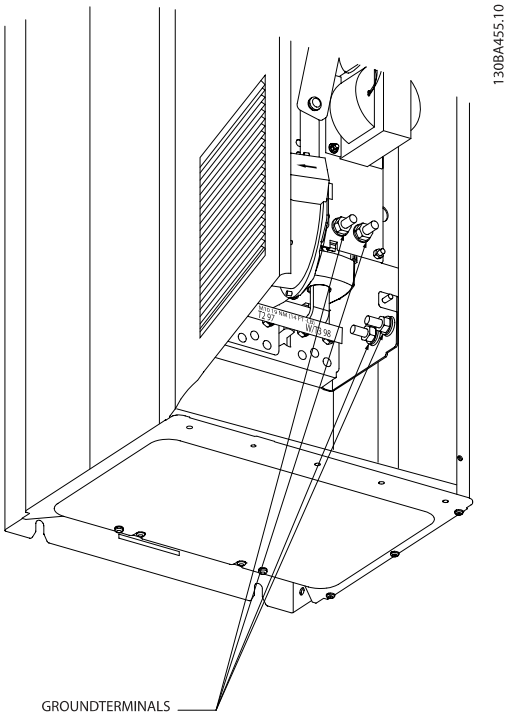

Figure 4.28: Position of ground terminals (drive section)

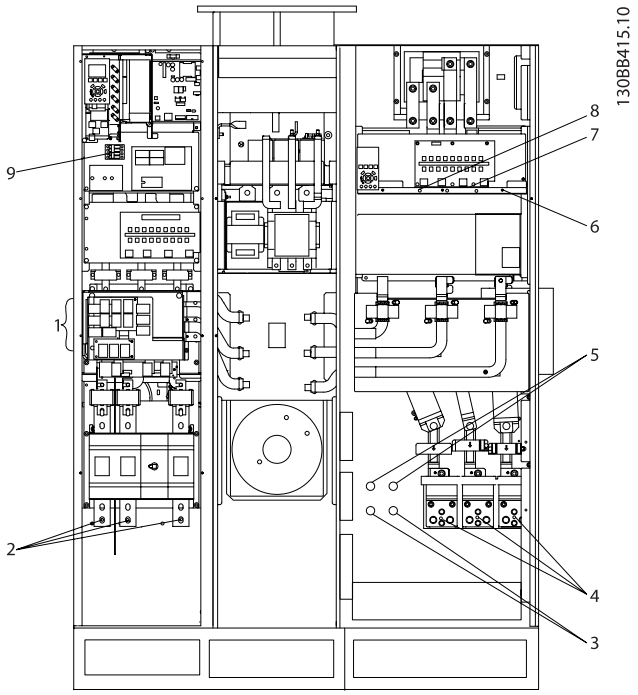

Figure 4.29: Frame size E7

1) RFI
2) Line

R	S	T
L1	L2	L3

3) Brake option

-R	+R
81	82

4) Motor

U	V	W
96	97	98
T1	T2	T3

5) Load sharing option

-DC	+DC
88	89

6) AUX Fan

100	101	102	103
L1	L2	L1	L2

7) Temp Switch

106	104	105

8) AUX Relay

01	02	03
04	05	06

9) Fan/SMPS fuse

4

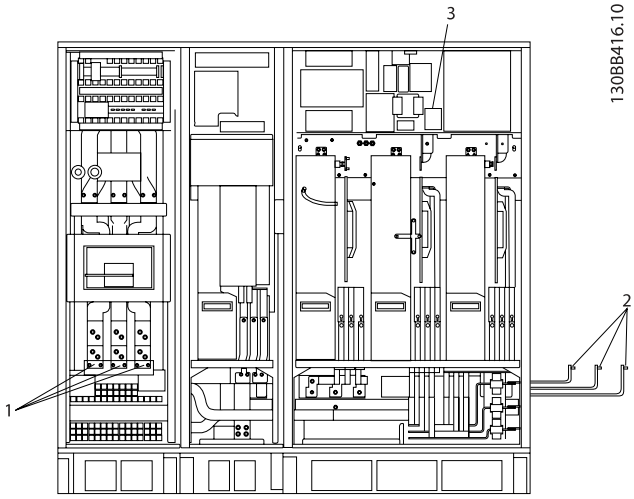

Figure 4.30: Active Filter, frame size F17

Section shown

↓

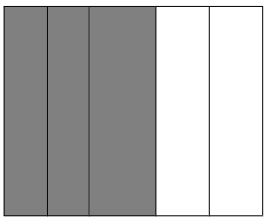

1) Line
R S T

L1 L2 L3

2) Bus bars to rectifier section of drive

3) Fuse block

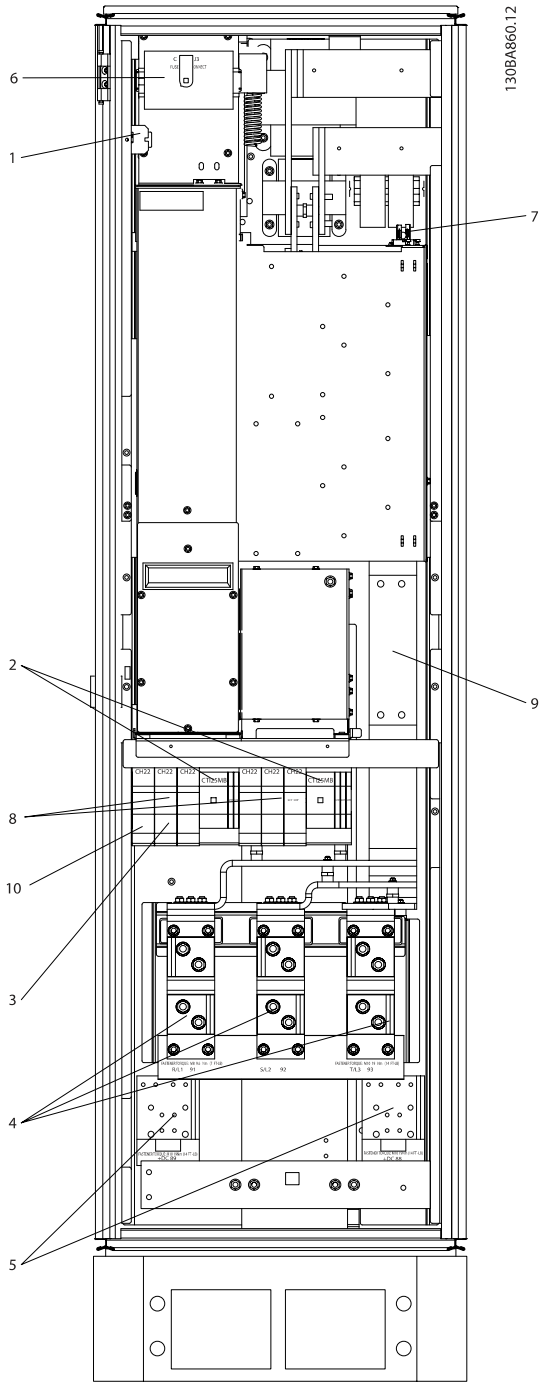

Figure 4.31: Rectifier Cabinet, frame size F17

Section shown

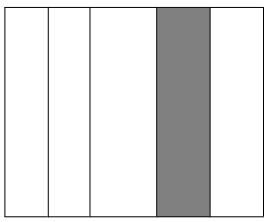

1) 24 V DC, 5 A
   T1 Output Taps
   Temp Switch
   106 104 105
2) Manual Motor Starters
3) 30 A Fuse Protected Power Terminals
4) Connection point to filter
   R S T
   L1 L2 L3
5) Load sharing
   -DC +DC
   88 89
6) Control Transformer Fuses (2 or 4 pieces). See fuse tables for part numbers
7) SMPS Fuse. See fuse tables for part numbers
8) Manual Motor Controller fuses (3 or 6 pieces). See fuse tables for part numbers
9) Line Fuses, F1 and F2 frame (3 pieces). See fuse tables for part numbers
10) 30 Amp Fuse Protected Power fuses

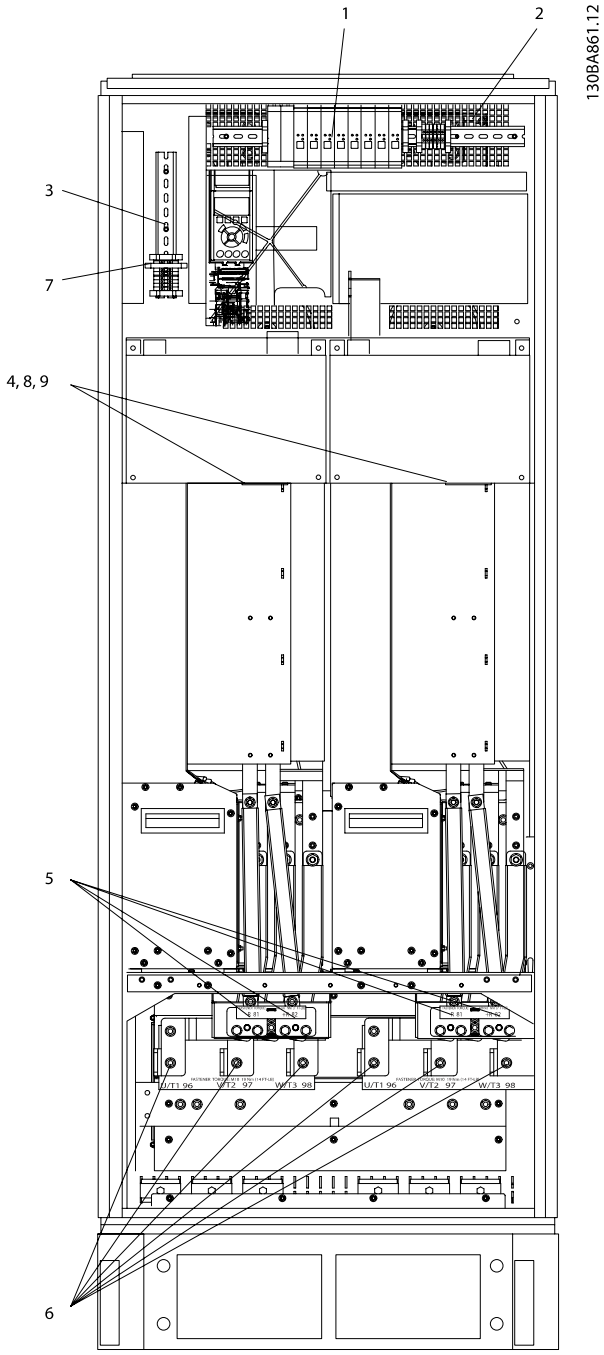

Figure 4.32: Inverter Cabinet, frame size F17

Section shown

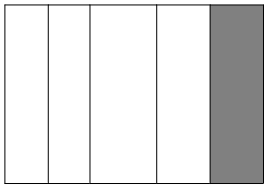

1) External Temperature Monitoring
2) AUX Relay
   01 02 03
   04 05 06
3) NAMUR
4) AUX Fan
   100 101 102 103
   L1 L2 L1 L2
5) Brake
   -R +R
   81 82
6) Motor
   U V W
   96 97 98
   T1 T2 T3
7) NAMUR Fuse. See fuse tables for part numbers
8) Fan Fuses. See fuse tables for part numbers
9) SMPS Fuses. See fuse tables for part numbers

4.6.2 Grounding

The following basic issues need to be considered when installing an adjustable frequency drive, so as to obtain electromagnetic compatibility (EMC).

- Safety grounding: Please note that the adjustable frequency drive has a high leakage current and must be grounded appropriately for safety reasons. Always follow local safety regulations.
- High-frequency grounding: Keep the ground wire connections as short as possible.

Connect the different ground systems at the lowest possible conductor impedance. The lowest possible conductor impedance is obtained by keeping the conductor as short as possible and by using the greatest possible surface area.
The metal cabinets of the different devices are mounted on the cabinet rear plate using the lowest possible HF impedance. This prevents having different HF voltages for the individual devices and prevents the risk of radio interference currents running in connection cables that may be used between the devices, as radio interference is reduced.
In order to obtain a low HF impedance, use the fastening bolts of the devices as HF connections to the rear plate. It is necessary to remove insulating paint and the like from the fastening points.

4.6.3 Extra Protection (RCD)

ELCB relays, multiple protective grounding or grounding can be used as extra protection, provided that local safety regulations are complied with.

In the case of a ground fault, a DC component may develop in the fault current.

If ELCB relays are used, local regulations must be observed. Relays must be suitable for protection of 3-phase equipment with a bridge rectifier and for a brief discharge on power-up.

See also the section *Special Conditions* in the Design Guide.

4.6.4 RFI Switch

Line power supply isolated from ground

If the adjustable frequency drive is supplied from an isolated line power source (IT line power, floating delta and grounded delta) or TT/TN-S line power with grounded leg, the RFI switch is recommended to be turned off (OFF) [1] via par. 14-50 *RFI Filter* on the drive and par. 14-50 *RFI Filter* on the filter. For further reference, see IEC 364-3. If optimum EMC performance is needed, parallel motors are connected or the motor cable length is above 82 ft [25 m], it is recommended to set par. 14-50 *RFI Filter* to [ON].

[1] Not available for 525–600/690 V adjustable frequency drives in frame sizes D, E and F.

In OFF, the internal RFI capacities (filter capacitors) between the chassis and the intermediate circuit are cut off to avoid damage to the intermediate circuit and to reduce the ground capacity currents (according to IEC 61800-3).

Please also refer to the application note *VLT on IT line power, MN.90.CX.02.* It is important to use isolation monitors that are capable for use together with power electronics (IEC 61557-8).

4.6.5 Torque

When tightening all electrical connections, it is very important to tighten with the correct torque. Too low or too high torque results in a bad electrical connection. Use a torque wrench to ensure correct torque.

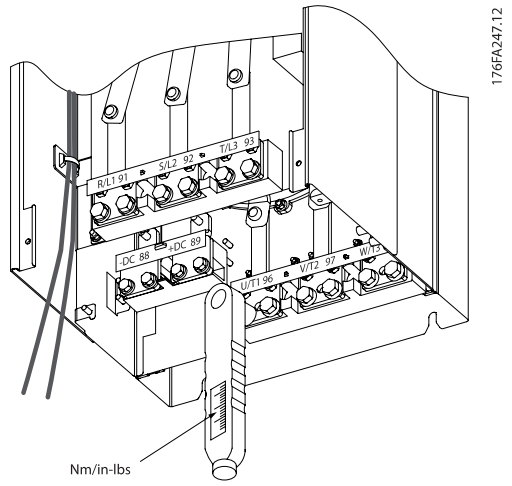

Figure 4.33: Always use a torque wrench to tighten the bolts.

Frame size	Terminal	Torque	Bolt size
D	Line power Motor	19–40 Nm (168–354 in-lbs)	M10
	Load sharing Brake	8.5–20.5 Nm (75–181 in-lbs)	M8
E	Line power Motor Load sharing	19–40 Nm (168–354 in-lbs)	M10
	Brake	8.5–20.5 Nm (75–181 in-lbs)	M8
F	Line power Motor	19–40 Nm (168–354 in-lbs)	M10
	Load sharing	19–40 Nm (168–354 in-lbs)	M10
	Brake	8.5–20.5 Nm (75–181 in-lbs)	M8
	Regen	8.5–20.5 Nm (75–181 in-lbs)	M8

Table 4.2: Torque for terminals

4.6.6 Shielded Cables

It is important that shielded and armored cables are connected properly to ensure high EMC immunity and low emissions.

Connection can be made using either cable connectors or clamps:

- EMC cable connectors: Generally available cable connectors can be used to ensure an optimum EMC connection.
- EMC cable clamp: Clamps allowing for easy connection are supplied with the adjustable frequency drive.

4.6.7 Motor Cable

The motor must be connected to terminals U/T1/96, V/T2/97, W/T3/98 located on the far right of the unit. Ground to terminal 99. All types of three-phase asynchronous standard motors can be used with an adjustable frequency drive unit. The factory setting is for clockwise rotation with the adjustable frequency drive output connected as follows:

Terminal No.	Function
96, 97, 98, 99	Line power U/T1, V/T2, W/T3 Ground

- Terminal U/T1/96 connected to U-phase
- Terminal V/T2/97 connected to V-phase
- Terminal W/T3/98 connected to W-phase

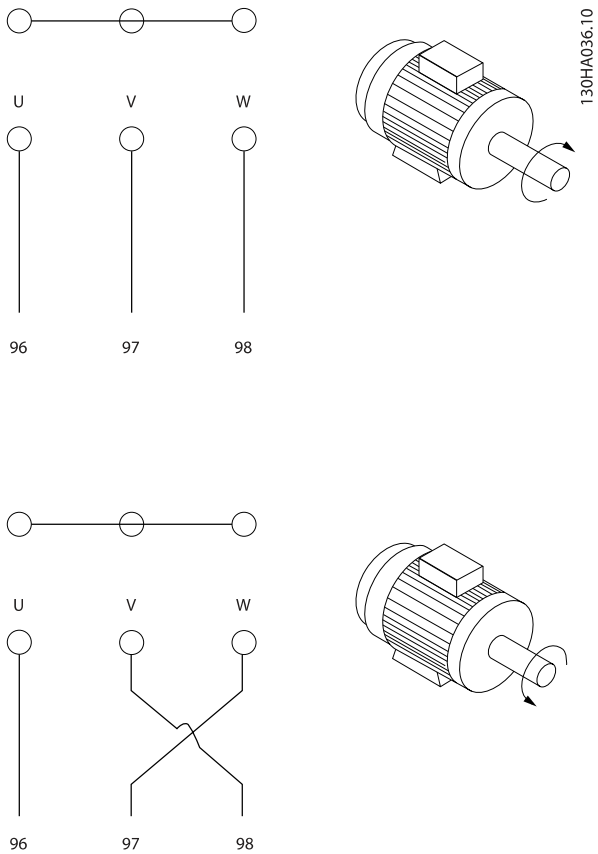

The direction of rotation can be changed by switching two phases in the motor cable or by changing the setting of par. 4-10 *Motor Speed Direction*. Motor rotation check can be performed using par. 1-28 *Motor Rotation Check* and following the steps shown in the display.

F frame Requirements

Motor phase cable quantities must be multiples of 2, resulting in 2, 4, 6, or 8 (1 cable is not allowed) to obtain equal amount of wires attached to both inverter module terminals. The cables are required to be equal length within 10% between the inverter module terminals and the first common point of a phase. The recommended common point is the motor terminals.

Output junction box requirements: The length, a minimum of 8 ft [2.5 m], and quantity of cables must be equal from each inverter module to the common terminal in the junction box.

NOTE!
If a retrofit application requires unequal amount of wires per phase, please consult the factory for requirements and documentation or use the top/bottom entry side cabinet option, instruction 177R0097.

4.6.8 Brake Cable Drives with Factory Installed Brake Chopper Option

(Only standard with letter B in position 18 of typecode).

The connection cable to the brake resistor must be shielded and the max. length from the adjustable frequency drive to the DC bar is limited to 82 feet [25 m].

Terminal No.	Function
81, 82	Brake resistor terminals

The connection cable to the brake resistor must be shielded. Connect the shield by means of cable clamps to the conductive backplate at the adjustable frequency drive and to the metal cabinet of the brake resistor.
Size the brake cable cross-section to match the brake torque. See also *Brake Instructions, MI.90.Fx.yy* and *MI.50.Sx.yy* for further information regarding safe installation.

Please note that voltages up to 790 VDC, depending on the supply voltage, may occur on the terminals.

F Frame Requirements

The brake resistor(s) must be connected to the brake terminals in each inverter module.

4.6.9 Brake Resistor Temperature Switch

Frame size D-E-F
Torque: 0.5-0.6 Nm (5 in-lbs)
Screw size: M3

This input can be used to monitor the temperature of an externally connected brake resistor. If the connection between 104 and 106 is removed, the adjustable frequency drive will trip on warning/alarm 27, "Brake IGBT".
A KLIXON switch must be installed that is `normally closed' in series with the existing connection on either 106 or 104. Any connection to this terminal must be double insulated to high voltage to maintain PELV.
Normally closed: 104-106 (factory installed jumper).

Terminal No.	Function
106, 104, 105	Brake resistor temperature switch.

If the temperature of the brake resistor gets too high and the thermal switch drops out, the adjustable frequency drive will stop braking. The motor will start coasting.

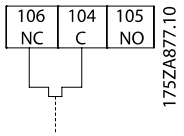

4.6.10 Load Sharing

Terminal No.	Function
88, 89	Load sharing

The connection cable must be shielded and the max. length from the adjustable frequency drive to the DC bar is limited to 82 ft [25 m].
Load sharing enables the linking of the DC intermediate circuits of several adjustable frequency drives.

Please note that voltages up to 1099 V DC may occur on the terminals.
Load sharing calls for extra equipment and safety considerations. For further information, see load sharing Instructions MI.50.NX.YY.

Please note that a line power disconnect may not isolate the adjustable frequency drive due to DC link connection

4.6.11 AC line input connections

Line power must be connected to terminals 91, 92 and 93 located on the far left of the unit. Ground is connected to the terminal to the right of terminal 93.

Terminal No.	Function
91, 92, 93	Line power R/L1, S/L2, T/L3
94	Ground

NOTE!
Check the nameplate to ensure that the AC line voltage of the adjustable frequency drive matches the power supply of your plant.

Ensure that the power supply can supply the necessary current to the adjustable frequency drive.

If the unit is without built-in fuses, ensure that the appropriate fuses have the correct current rating.

4.6.12 External Fan Supply

Frame size D-E-F
If the adjustable frequency drive is supplied by DC or if the fan must run independently of the power supply, an external power supply can be applied. The connection is made on the power card.

Terminal No.	Function
100, 101	Auxiliary supply S, T
102, 103	Internal supply S, T

The connector located on the power card provides the AC line voltage connection for the cooling fans. The fans are factory-equipped to be supplied from a common AC line (jumpers between 100-102 and 101-103). If an external supply is needed, the jumpers are removed and the supply is connected to terminals 100 and 101. A 5 Amp fuse should be used for protection. In UL applications, this should be a LittleFuse KLK-5 or equivalent.

4.6.13 Power and Control Wiring for Non-shielded Cables

Induced Voltage!
Run motor cables from multiple drives separately. Induced voltage from output motor cables run together can charge equipment capacitors even with the equipment turned off and locked out. Failure to run output cables separately could result in death or serious injury.

Run drive input power, motor wiring, and control wiring in three separate metallic conduits or raceways for high frequency noise isolation. Failure to isolate power, motor, and control wiring could result in less than optimum controller and associated equipment performance.

Because the power wiring carries high frequency electrical pulses, it is important that input power and motor power are run in separate conduit. If the incoming power wiring is run in the same conduit as the motor wiring, these pulses can couple electrical noise back onto the building power grid. Control wiring should always be isolated from the high voltage power wiring.
When shielded/armored cable is not used, at least three separate conduits must be connected to the panel option (see figure below).

- Power wiring into the enclosure
- Power wiring from the enclosure to the motor
- Control wiring

4.6.14 Fuses

Branch circuit protection:

In order to protect the installation against electrical and fire hazard, all branch circuits in an installation, switch gear, machines, etc., must be short-circuited and overcurrent protected according to national/international regulations.

Short-circuit protection:

The adjustable frequency drive must be protected against short-circuit to avoid electrical or fire hazard. Danfoss recommends using the fuses mentioned below to protect service personnel and equipment in case of an internal failure in the drive. The adjustable frequency drive provides full short-circuit protection in case of a short-circuit on the motor output.

Overcurrent protection

Provide overload protection to avoid fire hazard due to overheating of the cables in the installation. The adjustable frequency drive is equipped with internal overcurrent protection that can be used for upstream overload protection (UL applications excluded). See par. F-43 *Current Limit*. Moreover, fuses or circuit breakers can be used to provide the overcurrent protection in the installation. Overcurrent protection must always be carried out according to national regulations.

Non-UL compliance

If UL/cUL is not to be complied with, we recommend using the following fuses, which will ensure compliance with EN50178:

P160 - P250	380–480 V	type gG
P315 - P450	380–480 V	type gR

UL Compliance

380–480 V, frame sizes D, E and F

The fuses below are suitable for use on a circuit capable of delivering 100,000 Arms (symmetrical), 240 V, or 480 V, or 500 V, or 600 V depending on the drive voltage rating. With the proper fusing, the drive Short Circuit Current Rating (SCCR) is 100,000 Arms.

Size/ Type	Bussmann E1958 JFHR2**	Bussmann E4273 T/JDDZ**	SIBA E180276 JFHR2	LittelFuse E71611 JFHR2**	Ferraz-Shawmut E60314 JFHR2**	Bussmann E4274 H/JDDZ**	Bussmann E125085 JFHR2*	Internal Option Bussmann
P160	FWH-400	JJS-400	2061032.40	L50S-400	A50-P400	NOS-400	170M4012	170M4016
P200	FWH-500	JJS-500	2061032.50	L50S-500	A50-P500	NOS-500	170M4014	170M4016
P250	FWH-600	JJS-600	2062032.63	L50S-600	A50-P600	NOS-600	170M4016	170M4016

Table 4.3: Frame size D, Line fuses, 380–480 V

Size/Type	Bussmann PN*	Rating	Ferraz	Siba
P315	170M4017	700 A, 700 V	6.9URD31D08A0700	20 610 32.700
P355	170M6013	900 A, 700 V	6.9URD33D08A0900	20 630 32.900
P400	170M6013	900 A, 700 V	6.9URD33D08A0900	20 630 32.900
P450	170M6013	900 A, 700 V	6.9URD33D08A0900	20 630 32.900

Table 4.4: Frame size E, Line fuses, 380–480 V

Size/Type	Bussmann PN*	Rating	Siba	Internal Bussmann Option
P500	170M7081	1600 A, 700 V	20 695 32.1600	170M7082
P560	170M7081	1600 A, 700 V	20 695 32.1600	170M7082
P630	170M7082	2000 A, 700 V	20 695 32.2000	170M7082
P710	170M7082	2000 A, 700 V	20 695 32.2000	170M7082

Table 4.5: Frame size F, Line fuses, 380–480 V

Size/Type	Bussmann PN*	Rating	Siba
P500	170M8611	1100 A, 1000 V	20 781 32.1000
P560	170M8611	1100 A, 1000 V	20 781 32.1000
P630	170M6467	1400 A, 700 V	20 681 32.1400
P710	170M6467	1400 A, 700 V	20 681 32.1400

Table 4.6: Frame size F, Inverter module DC Link Fuses, 380–480 V

*170M fuses from Bussmann shown use the -/80 visual indicator; -TN/80 Type T, -/110 or TN/110 Type T indicator fuses of the same size and amperage may be substituted for external use

**Any minimum 500 V UL listed fuse with associated current rating may be used to meet UL requirements.

Supplementary fuses

Frame size	Bussmann PN*	Rating
D, E and F	KTK-4	4 A, 600 V

Table 4.7: SMPS Fuse

Size/Type	Bussmann PN*	LittelFuse	Rating
P160-P315, 380–480 V	KTK-4		4 A, 600 V
P355-P710, 380–480 V		KLK-15	15A, 600 V

Table 4.8: Fan Fuses

Size/Type		Bussmann PN*	Rating	Alternative Fuses
P500-P710, 380–480 V	2.5–4.0 A	LPJ-6 SP or SPI	6 A, 600 V	Any listed Class J Dual Element, Time Delay, 6 A
P500-P710, 380–480 V	4.0–6.3 A	LPJ-10 SP or SPI	10 A, 600 V	Any listed Class J Dual Element, Time Delay, 10 A
P500-P710, 380–480 V	6.3–10 A	LPJ-15 SP or SPI	15 A, 600 V	Any listed Class J Dual Element, Time Delay, 15 A
P500-P710, 380–480 V	10–16 A	LPJ-25 SP or SPI	25 A, 600 V	Any listed Class J Dual Element, Time Delay, 25 A

Table 4.9: Manual Motor Controller Fuses

Frame size	Bussmann PN*	Rating	Alternative Fuses
F	LPJ-30 SP or SPI	30 A, 600 V	Any listed Class J Dual Element, Time Delay, 30 A

Table 4.10: 30 A Fuse Protected Terminal Fuse

Frame size	Bussmann PN*	Rating	Alternative Fuses
D	LP-CC-8/10	0.8 A, 600 V	Any listed Class CC, 0.8 A
E	LP-CC-1 1/2	1.5 A, 600 V	Any listed Class CC, 1.5 A
F	LPJ-6 SP or SPI	6 A, 600 V	Any listed Class J Dual Element, Time Delay, 6 A

Table 4.11: Control Transformer Fuse

Frame size	Bussmann PN*	Rating
F	GMC-800MA	800 mA, 250 V

Table 4.12: NAMUR Fuse

Frame size	Bussmann PN*	Rating	Alternative Fuses
F	LP-CC-6	6 A, 600 V	Any listed Class CC, 6 A

Table 4.13: Safety Relay Coil Fuse with PILS Relay

4.6.15 Line Power Disconnectors - Frame Size D, E and F

Frame size	Power & Voltage	Type
D	P160-P250 380–480 V	OT400U12-91
E	P315 380–480 V	ABB OETL-NF600A
E	P355-P450 380–480 V	ABB OETL-NF800A
F	P500 380–480 V	Merlin Gerin NPJF36000S12AAYP
F	P560-P710 380–480 V	Merlin Gerin NRK36000S20AAYP

4.6.16 F Frame circuit breakers

Frame size	Power & Voltage	Type
F	P500 380–480 V	Merlin Gerin NPJF36120U31AABSCYP
F	P560-P710 380–480 V	Merlin Gerin NRJF36200U31AABSCYP

4.6.17 F Frame Line Power Contactors

Frame size	Power & Voltage	Type
F	P500-P560 380–480 V	Eaton XTCE650N22A
F	P 630-P710 380–480 V	Eaton XTCEC14P22B

4.6.18 Motor Insulation

For motor cable lengths ≤ than the maximum cable length listed in the General Specifications tables, the following motor insulation ratings are recommended because the peak voltage can be up to twice the DC link voltage, 2.8 times the AC line voltage due to transmission line effects in the motor cable. If a motor has lower insulation rating, it is recommended to use a du/dt or sine-wave filter.

Nominal AC Line Voltage	Motor Insulation
$U_N \leq 420$ V	Standard U_{LL} = 1300 V
420 V < $U_N \leq 500$ V	Reinforced U_{LL} = 1600 V

4.6.19 Motor Bearing Currents

It is generally recommended that motors of a rating 150 hp [110 kW] or higher operating via adjustable frequency drives should have NDE (Non-Drive End) insulated bearings installed to eliminate circulating bearing currents due to the physical size of the motor. To minimize DE (Drive End) bearing and shaft currents proper grounding of the drive, motor, driven machine, and motor to the driven machine is required. Although failure due to bearing currents is low and very dependent on many different items, for security of operation the following are mitigation strategies which can be implemented.

Standard Mitigation Strategies:

1. Use an insulated bearing
2. Apply rigorous installation procedures

   Ensure the motor and load motor are aligned

   Strictly follow the EMC Installation guideline

   Reinforce the PE so the high frequency impedance is lower in the PE than the input power leads.

   Provide a good high frequency connection between the motor and the adjustable frequency drive for instance by shielded cable which has a 360° connection in the motor and the adjustable frequency drive

   Make sure that the impedance from adjustable frequency drive to building ground is lower that the grounding impedance of the machine. This can be difficult for pumps- Make a direct ground connection between the motor and load motor.
3. Apply conductive lubrication
4. Try to ensure the line voltage is balanced to ground. This can be difficult for IT, TT, TN-CS or Grounded leg systems
5. Use an insulated bearing as recommended by the motor manufacturer (note: Motors from reputable manufacturers will typically have these fitted as standard in motors of this size)

If found to be necessary and after consultation with Danfoss:

6. Lower the IGBT switching frequency
7. Modify the inverter waveform, 60° AVM vs. SFAVM
8. Install a shaft grounding system or use an isolating coupling between motor and load
9. Use minimum speed settings, if possible.
10. Use a dU/dt or sinus filter

4.6.20 Control Cable Routing

Tie down all control wires to the designated control cable routing as shown in the picture. Remember to connect the shields in a proper way to ensure optimum electrical immunity.

Serial communication bus connection

Connections are made to the relevant options on the control card. For details, see the relevant serial communication bus instruction. The cable must be placed in the provided path inside the adjustable frequency drive and tied down together with other control wires (see pictures).

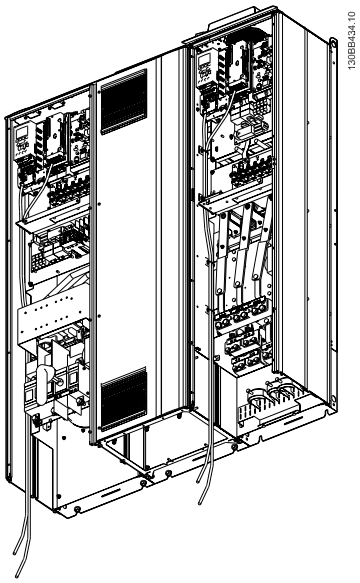

Control card wiring path for the D11

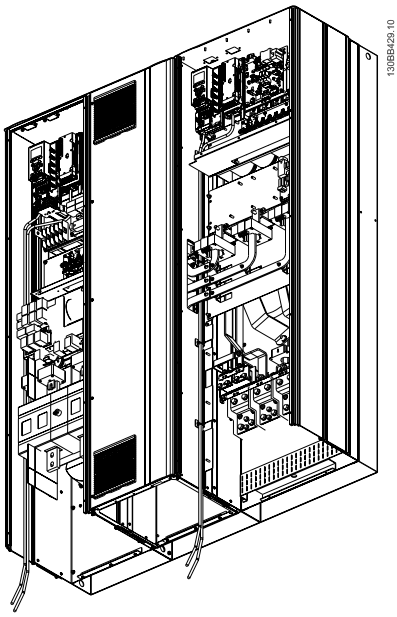

Control card wiring path for the E7

4.6.21 Access to Control Terminals

All terminals to the control cables are located beneath the LCP (both filter and drive LCP). They are accessed by opening the door of the unit.

4.6.22 Electrical Installation, Control Terminals

To connect the cable to the terminal:

1. Strip insulation by about 0.34–0.39 in [9–10 mm]
2. Insert a screwdriver[1)] in the square hole.
3. Insert the cable in the adjacent circular hole.
4. Remove the screwdriver. The cable is now mounted in the terminal.

To remove the cable from the terminal:

1. Insert a screwdriver[1)] in the square hole.
2. Pull out the cable.

[1)] Max. 0.015 x 0.1 in. [0.4 x 2.5 mm]

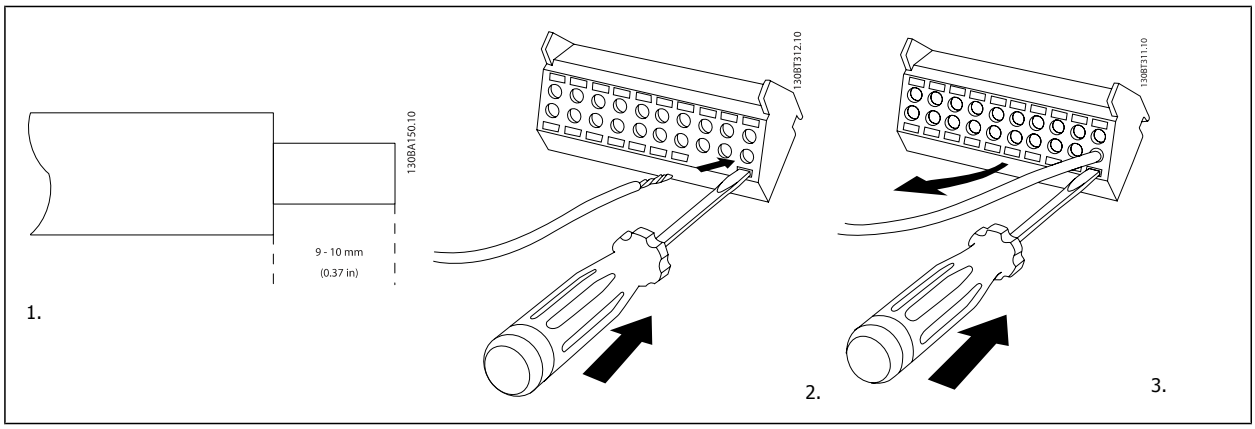

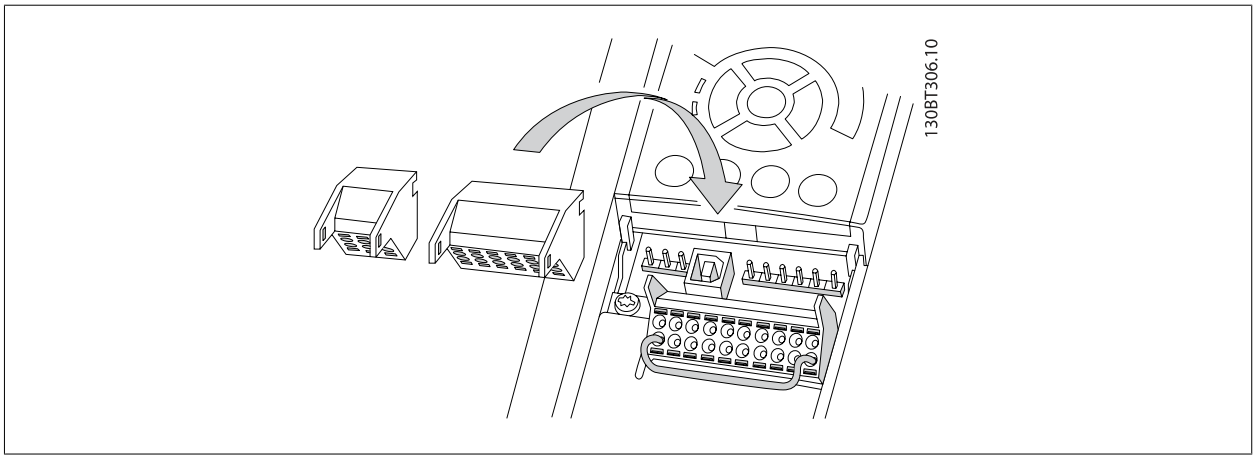

4.7 Connection Examples for Control of Motor with External Signal Provider

NOTE!
The following examples refer only to the drive control card (right LCP), *not* the filter.

4.7.1 Start/Stop

Terminal 18 = par. 5-10 *Terminal 18 Digital Input* [8] *Start*
Terminal 27 = par. 5-12 *Terminal 27 Digital Input* [0] *No operation* (Default *coast inverse*)

Terminal 37 = Safe stop

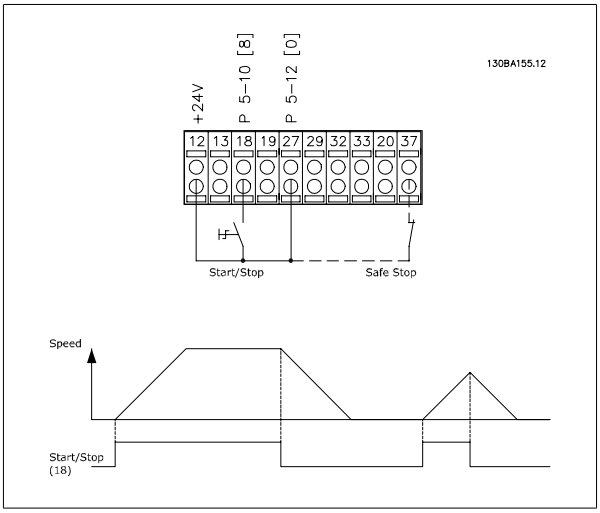

4.7.2 Pulse Start/Stop

Terminal 18 = par. 5-10 *Terminal 18 Digital Input* [9] *Latched start*
Terminal 27= par. 5-12 *Terminal 27 Digital Input* [6] *Stop inverse*

Terminal 37 = Safe stop

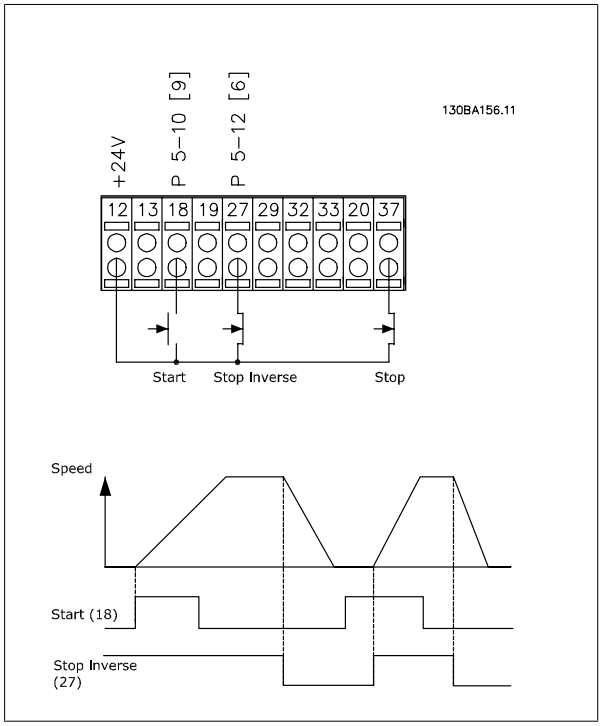

4.7.3 Speed Up/Down

Terminals 29/32 = Speed up/down:

Terminal 18 = par. 5-10 *Terminal 18 Digital Input* Start [9] (default)

Terminal 27 = par. 5-12 *Terminal 27 Digital Input* Freeze reference [19]

Terminal 29 = par. 5-13 *Terminal 29 Digital Input* Speed up [21]

Terminal 32 = par. 5-14 *Terminal 32 Digital Input* Slow [22]

NOTE: Terminal 29 only in FC x02 (x=series type).

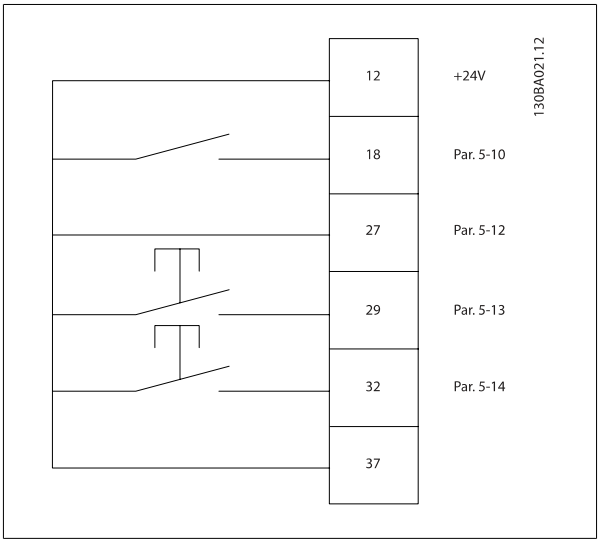

4.7.4 Potentiometer Reference

Voltage reference via a potentiometer:

Reference Source 1 = [1] *Analog input 53* (default)

Terminal 53, Low Voltage = 0 Volt

Terminal 53, High Voltage = 10 Volt

Terminal 53, Low Ref./Feedback = 0 RPM

Terminal 53, High Ref./Feedback = 1,500 RPM

Switch S201 = OFF (U)

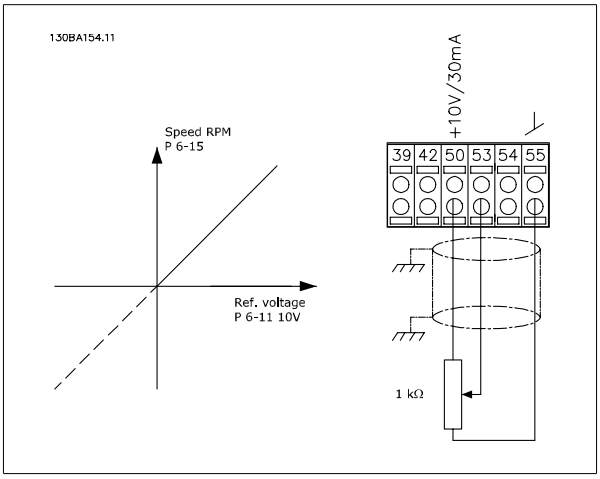

4

4.8 Electrical Installation - additional

4.8.1 Electrical Installation, Control Cables

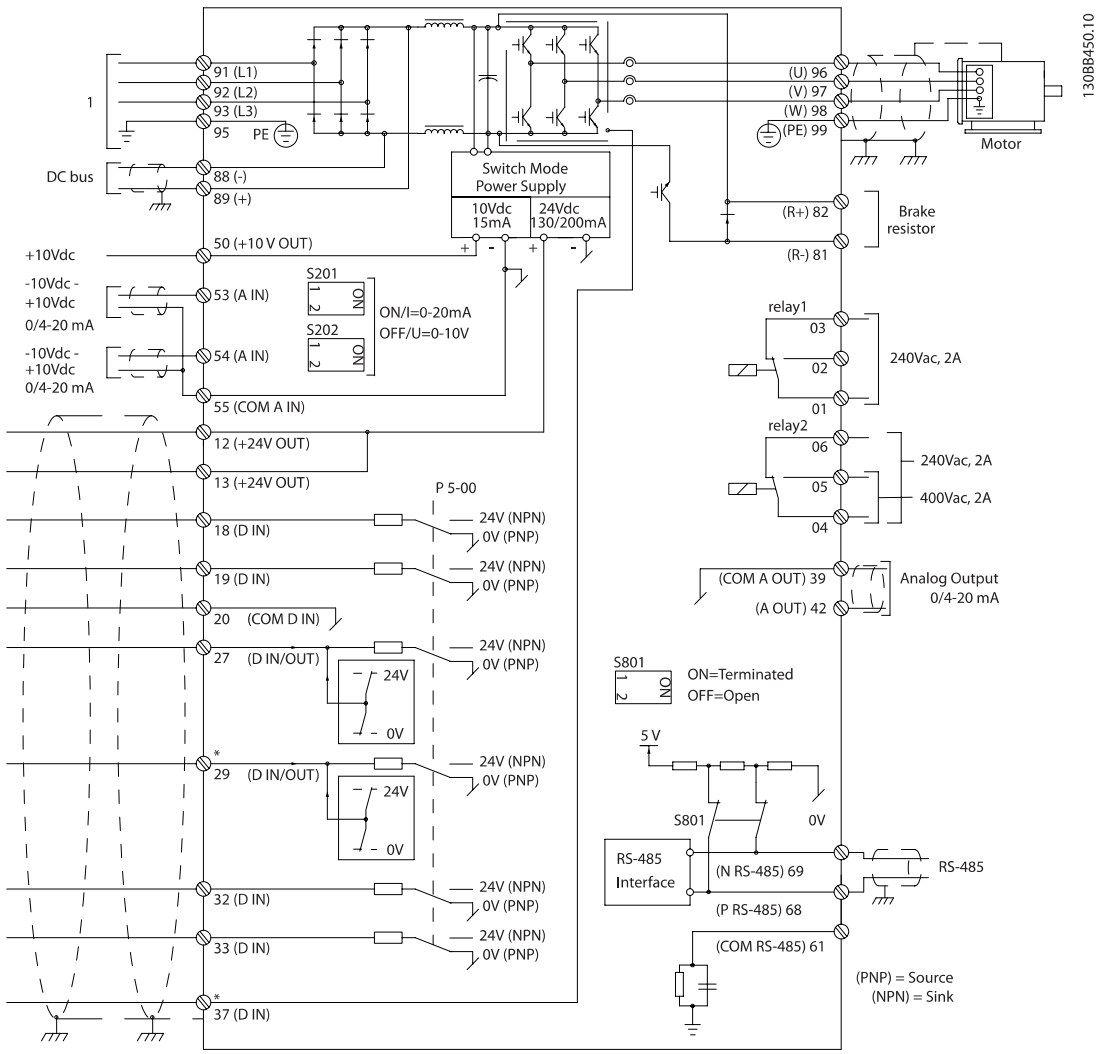

Figure 4.34: Diagram showing all electrical terminals without options.
1:Connection to filter
Terminal 37 is the input to be used for Safe Stop. For instructions on safe stop installation, refer to the section *Safe Stop Installation* in the adjustable frequency drive Design Guide. See also sections Safe Stop and Safe Stop Installation.

In rare cases, very long control cables and analog signals may, depending on installation, result in 50/60 Hz ground loops due to noise from line power supply cables.

If this occurs, it may be necessary to break the shield or insert a 100 nF capacitor between shield and chassis.

The digital and analog inputs and outputs must be connected separately to the control cards of the unit (both filter and drive, terminal 20, 55, 39) to avoid ground currents from both groups to affect other groups. For example, switching on the digital input may disturb the analog input signal.

Input polarity of control terminals

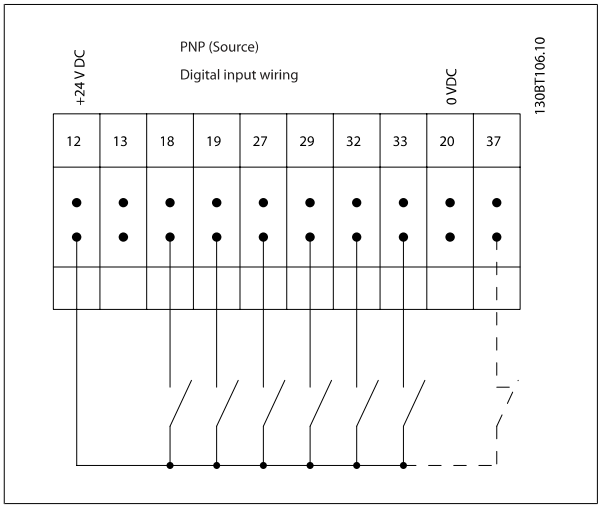

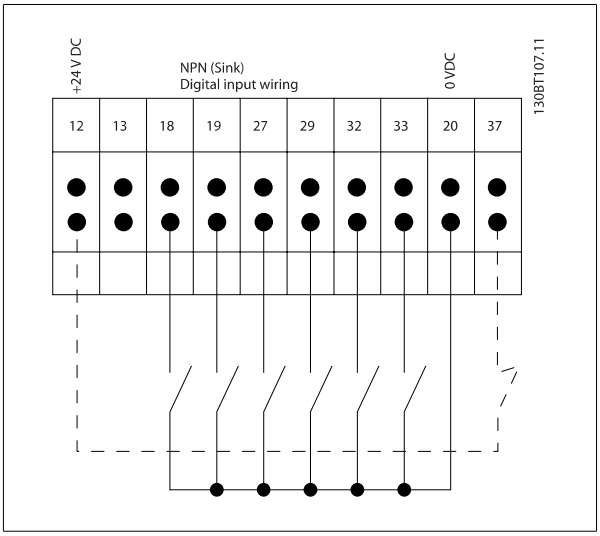

NOTE!
To comply with EMC emission specifications, shielded/armored cables are recommended. If a non-shielded/unarmored cable is used, see section *Power and Control Wiring for Non-shielded cables*. If non-shielded control cables are used, it is recommended to use ferrite cores to improve EMC performance.

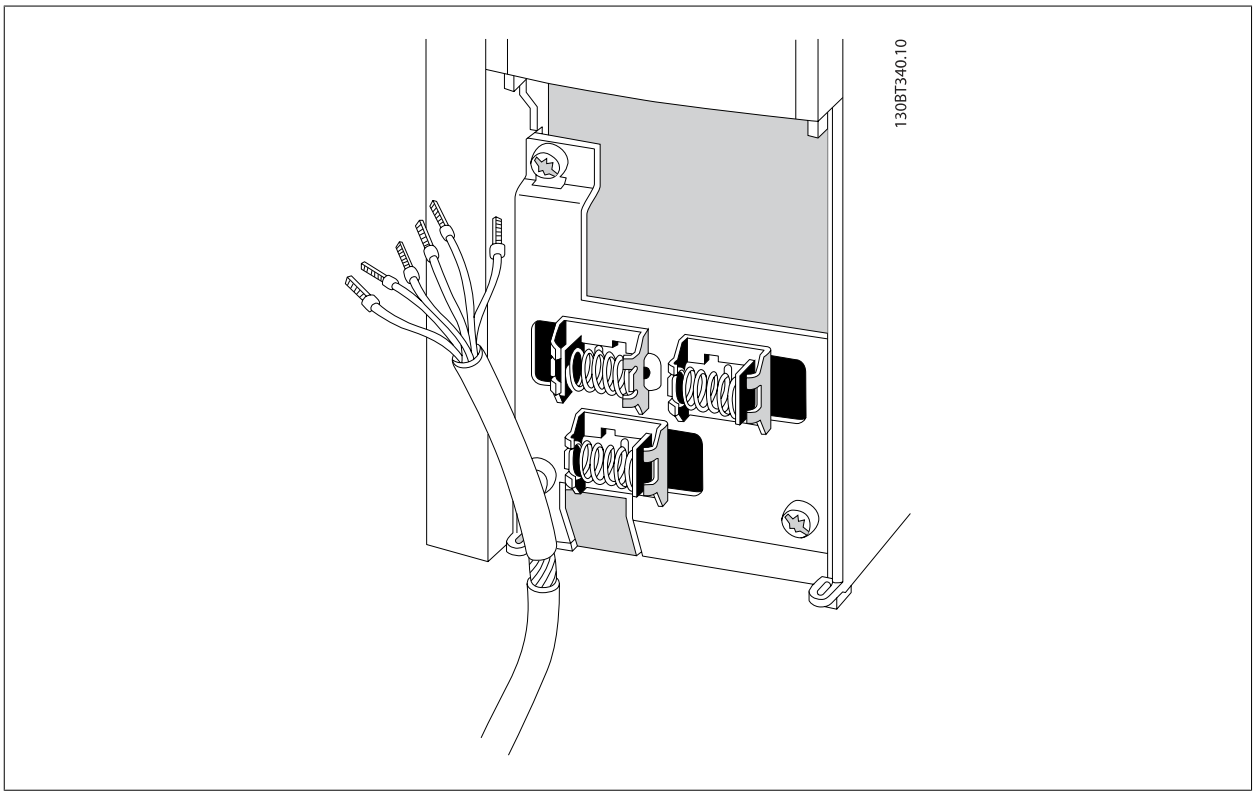

Connect the wires as described in the Instruction Manual for the adjustable frequency drive. Remember to connect the shields in a proper way to ensure optimum electrical immunity.

4.8.2 Switches S201, S202, and S801

Switches S201 (A53) and S202 (A54) are used to select a current (0-20 mA) or a voltage (-10 to 10 V) configuration for the analog input terminals 53 and 54, respectively.

Switch S801 (BUS TER.) can be used to enable termination on the RS-485 port (terminals 68 and 69).

See drawing *Diagram showing all electrical terminals* in section *Electrical Installation.*

Default setting:

S201 (A53) = OFF (voltage input)

S202 (A54) = OFF (voltage input)

S801 (Bus termination) = OFF

NOTE!
When changing the function of S201, S202 or S801, be careful not to force the switch over. It is recommended to remove the LCP fixture (cradle) when operating the switches. The switches must not be operated while the adjustable frequency drive is powered.

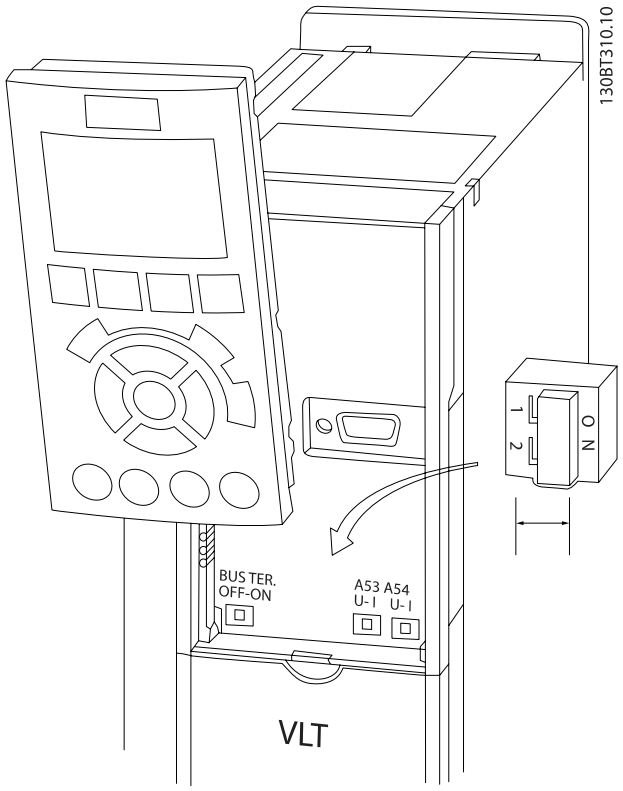

4.9 Final Set-up and Test

To test the set-up and ensure that the adjustable frequency drive is running, follow these steps.

Step 1. Locate the motor nameplate

NOTE!
The motor is either star- (Y) or delta-connected (Δ). This information is located on the motor nameplate data.

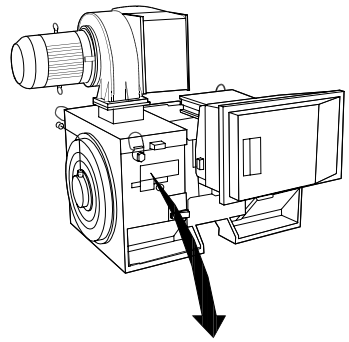

THREE PHASE INDUCTION MOTOR

MOD MCV 315E	Nr. 135189 12 04				IL/IN 6.5	
kW 400	PRIMARY				SF 1.15	
HP 536	V 690	A 410.6	CONN Y		COSf 0.85	40
mm 1481	V	A	CONN		AMB 40	°C
Hz 50	V	A	CONN		ALT 1000	m
DESIGN N	SECONDARY				RISE 80	°C
DUTY S1	V	A	CONN		ENCLOSURE IP23	
INSUL I	EFFICIENCY %	95.8%	100%	95.8%	75%	WEIGHT 1.83 ton

⚠ CAUTION

130BA767.10

Step 2. Enter the motor nameplate data in this parameter list.
To access this list, first press the [QUICK MENU] key, then select "Q2 Quick Set-up".

1.	Par. P-07 *Motor Power [kW]* Par. P-02 *Motor Power [HP]*
2.	Par. F-05 *Motor Rated Voltage*
3.	Par. F-04 *Base Frequency*
4.	Par. P-03 *Motor Current*
5.	Par. P-06 *Base Speed*

Step 3. Activate the Automatic Motor Adaptation (AMA)

Performing an AMA will ensure optimum performance. The AMA measures the values from the motor model equivalent diagram.

1. Connect terminal 37 to terminal 12 (if terminal 37 is available).
2. Connect terminal 27 to terminal 12 or set par. E-03 *Terminal 27 Digital Input* to 'No function' (par. E-03 *Terminal 27 Digital Input* [0])
3. Activate the AMA par. P-04 *Auto Tune*.
4. Choose between complete or reduced AMA. If a sine-wave filter is mounted, run only the reduced AMA, or remove the sine-wave filter during the AMA procedure.
5. Press the [OK] key. The display shows "Press [Hand on] to start".
6. Press the [Hand on] key. A progress bar indicates if the AMA is in progress.

Stop the AMA during operation

1. Press the [OFF] key - the adjustable frequency drive enters into alarm mode and the display shows that the AMA was terminated by the user.

Successful AMA

1. The display shows "Press [OK] to finish AMA".
2. Press the [OK] key to exit the AMA state.

Unsuccessful AMA

1. The adjustable frequency drive enters into alarm mode. A description of the alarm can be found in the *Warnings and Alarms* chapter.
2. "Report Value" in the [Alarm Log] shows the last measuring sequence carried out by the AMA before the adjustable frequency drive entered alarm mode. This number along with the description of the alarm will assist you in troubleshooting. If you contact Danfoss for service, make sure to mention the number and alarm description.

NOTE!
Unsuccessful AMA is often caused by incorrectly registered motor nameplate data or a too big difference between the motor power size and the adjustable frequency drive power size.

Step 4. Set speed limit and ramp time

Par. F-52 *Minimum Reference*
Par. F-53 *Maximum Reference*

Table 4.14: Set up the desired limits for speed and ramp time.

Par. F-18 *Motor Speed Low Limit [RPM]* or par. F-16 *Motor Speed Low Limit [Hz]*
Par. F-17 *Motor Speed High Limit [RPM]* or par. F-15 *Motor Speed High Limit [Hz]*

Par. F-07 *Accel Time 1*
Par. F-08 *Decel Time 1*

4.10 Additional Connections

4.10.1 Mechanical Brake Control

In hoisting/lowering applications, it is necessary to be able to control an electro-mechanical brake:

- Control the brake using any relay output or digital output (terminal 27 or 29).
- Keep the output closed (voltage-free) as long as the adjustable frequency drive is unable to 'support' the motor, such as when the load is too heavy, for example.
- Select *Mechanical brake control* [32] in par. 5-4* for applications with an electro-mechanical brake.
- The brake is released when the motor current exceeds the preset value in par. B-20 *Release Brake Current*.
- The brake is engaged when the output frequency is less than the frequency set in par. B-21 *Activate Brake Speed [RPM]*or par. B-22 *Activate Brake Speed [Hz]*, and only if the adjustable frequency drive carries out a stop command.

If the adjustable frequency drive is in alarm mode or in an overvoltage situation, the mechanical brake immediately cuts in.

4.10.2 Parallel Connection of Motors

The adjustable frequency drive can control several parallel-connected motors. The total current consumption of the motors must not exceed the rated output current $I_{M,N}$ for the adjustable frequency drive.

NOTE!
Installation with cables connected in a common joint, as in the figure below, is only recommended for short cable lengths.

NOTE!
When motors are connected in parallel, par. 1-29 *Automatic Motor Adaptation (AMA)* cannot be used.

NOTE!
The electronic thermal relay (ETR) of the adjustable frequency drive cannot be used as motor protection for the individual motor in systems with parallel-connected motors. Provide further motor protection with, for example, thermistors in each motor or individual thermal relays (circuit breakers are not suitable for protection).

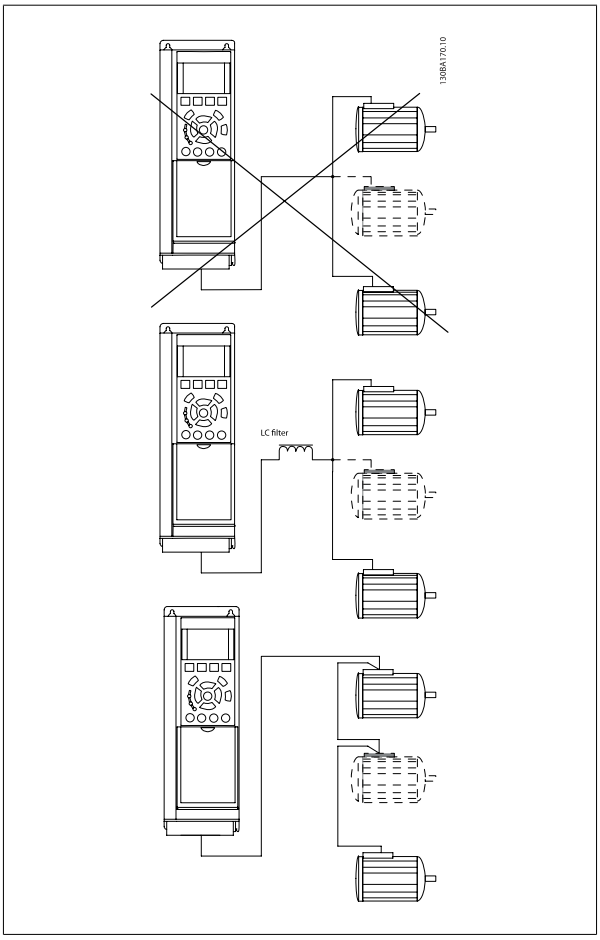

Problems may arise at start and at low RPM values if motor sizes are widely different because small motors' relatively high ohmic resistance in the stator calls for a higher voltage at start and at low RPM values.

4.10.3 Motor Thermal Protection

The electronic thermal relay in the adjustable frequency drive has received UL-approval for single motor protection, when par. 1-90 *Motor Thermal Protection*is set for *ETR Trip* and par. 1-24 *Motor Current* is set to the rated motor current (see motor nameplate).
For thermal motor protection, it is also possible to use the MCB 112 PTC thermistor card option. This card provides an ATEX certificate to protect motors in explosion hazard areas, Zone 1/21 and Zone 2/22. Please refer to the *Design Guide* for further information.

5 How to Operate the Low Harmonic Drive

5.1 Ways of Operation

5.1.1 Ways of operation

The low harmonic drive can be operated in 2 ways:

1. Graphical Local Control Panel (GLCP)
2. RS-485 serial communication or USB, both for PC connection

5.1.2 How to operate the Graphical LCP (GLCP)

The low harmonic drive is equipped with two LCPs, one on the adjustable frequency drive section (to the right) of the drive and one on the active filter section (to the left). The filter LCP is operated the same way as the adjustable frequency drive LCP. Each LCP controls only the unit it is connected to and there is no communication between the two LCPs.

NOTE!
The active filter should be in auto mode, i.e., the [Auto On] button must be pressed on the filter LCP

The following instructions are valid for the GLCP (LCP 102).

The GLCP is divided into four functional groups:

1. Graphical display with Status lines.
2. Menu keys and LEDs - selecting mode, changing parameters and switching between display functions.
3. Navigation keys and LEDs (LEDs).
4. Operation keys and LEDs.

Graphical display:
The LCD display is back lit with a total of 6 alpha-numeric lines. All data is displayed on the LCP, which can show up to five operating variables while in [Status] mode. The picture below shows an example of the drive LCP. The filter LCP looks identical but displays information related to the filter operation.

Display lines:

a. **Status line:** Status messages displaying icons and graphics.

b. **Line 1-2:** Operator data lines displaying data and variables defined or chosen by the user. By pressing the [Status] key, up to one extra line can be added.

c. **Status line:** Status messages displaying text.

The display is divided into 3 sections:

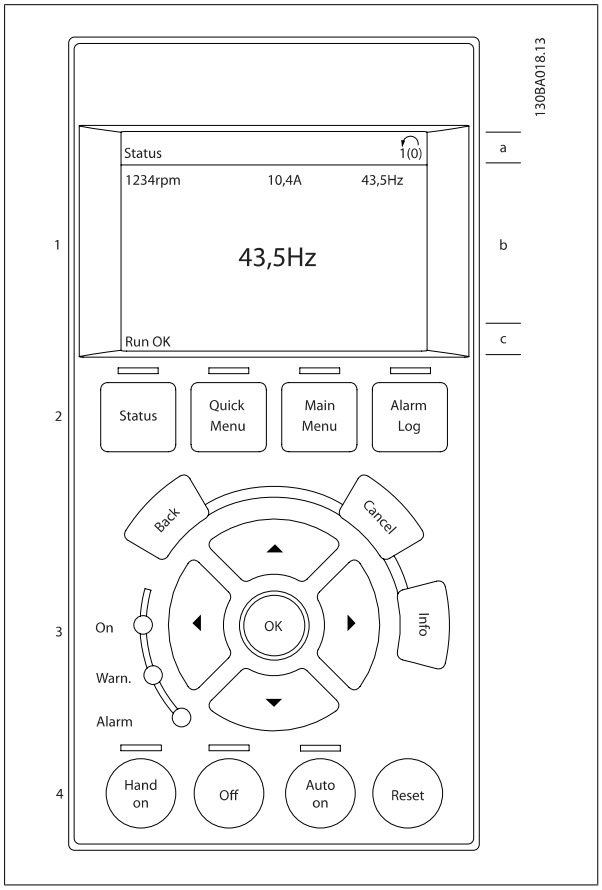

Top section (a)

shows the status when in status mode, or up to two variables when not in status mode and in the case of an alarm/warning.

The number of the Active Set-up (selected as the Active Set-up in par. 0-10) is shown. When programming in another set-up than the Active Set-up, the number of the set-up being programmed appears to the right in brackets.

Middle section (b)

shows up to 5 variables with related unit, regardless of status. In the case of an alarm/warning, the warning is shown instead of the variables.

It is possible to toggle between three status read-out displays by pressing the [Status] key.
Operating variables with different formatting are shown in each status screen - see below.

Several values or measurements can be linked to each of the displayed operating variables. The values/measurements to be displayed can be defined via par. 0-20, 0-21, 0-22, 0-23, and 0-24, which can be accessed via [QUICK MENU], "Q3 Function Set-ups", "Q3-1 General Settings", "Q3-11 Display Settings".

Each value / measurement readout parameter selected in par. 0-20 to par. 0-24 has its own scale and number of digits after a possible decimal point. Larger numeric values are displayed with few digits after the decimal point.
Ex.: Current readout
5.25 A; 15.2 A 105 A.

Status display I

This readout state is standard after startup or initialization.

Use [INFO] to obtain information about the value/measurement linked to the displayed operating variables (1.1, 1.2, 1.3, 2, and 3).

See the operating variables shown in the display in this figure. 1.1, 1.2 and 1.3 are shown in small size. 2 and 3 are shown in medium size.

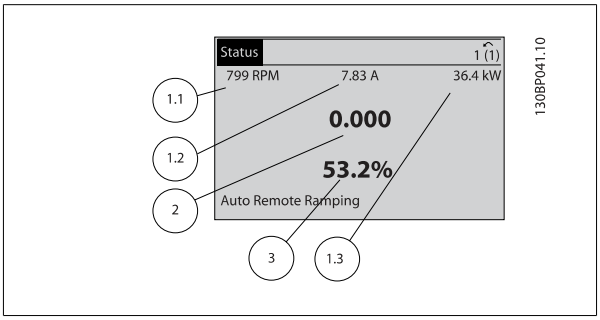

Status display II

See the operating variables (1.1, 1.2, 1.3, and 2) shown in the display in this figure.

In the example, Speed, Motor current, Motor power and Frequency are selected as variables in the first and second lines.

1.1, 1.2 and 1.3 are shown in small size. 2 is shown in large size.

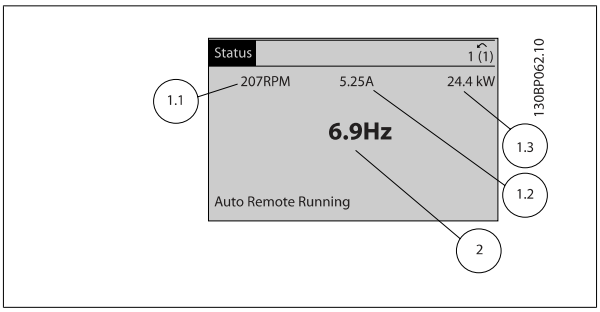

Status display III:

This state displays the event and action of the Smart Logic Control. For further information, see the section *Smart Logic Control*.

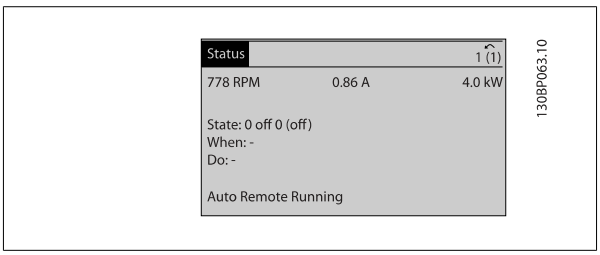

NOTE!

Status display III is not available on the filter LCP

Bottom section

always shows the state of the adjustable frequency drive in status mode.

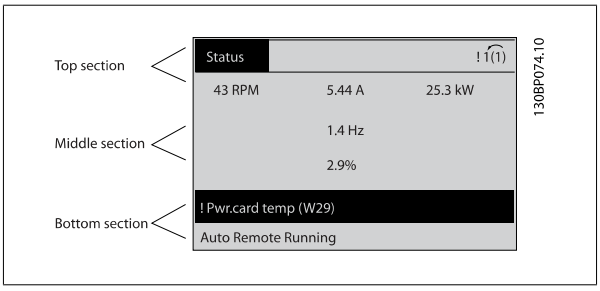

Display contrast adjustment

Press [status] and [▲] for darker display

Press [status] and [▼] for brighter display

LEDs:

If certain threshold values are exceeded, the alarm and/or warning LED lights up. A status and alarm text appear on the control panel.

The On LED is activated when the adjustable frequency drive receives power from AC line voltage, a DC bus terminal, or an external 24 V supply. At the same time, the back light is on.

- Green LED/On: Control section is working.
- Yellow LED/Warn.: Indicates a warning.
- Flashing Red LED/Alarm: Indicates an alarm.

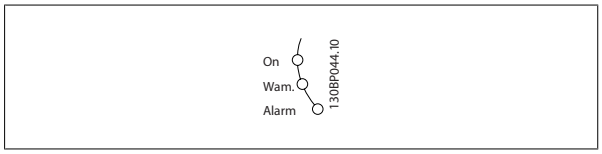

GLCP keys

Menu keys

The menu keys are divided into functions. The keys below the display and LEDs are used for parameter set-up, including choice of display indication during normal operation.

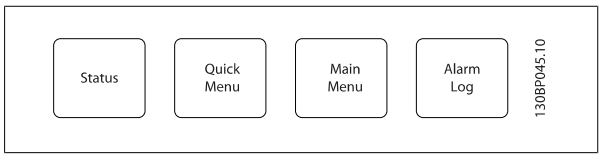

5

[Status]

Indicates the status of the adjustable frequency drive (and/or the motor) or the filter respectively. On the drive LCP, 3 different readouts can be chosen by pressing the [Status] key:

5 line readouts, 4 line readouts or Smart Logic Control.

Smart Logic Control is not available for the filter.

Use **[Status]** for selecting the mode of display or for changing back to display mode from either the quick menu mode, main menu mode or alarm mode. Also use the [Status] key to toggle single or double readout mode.

[Quick Menu]

Allows quick set-up of the adjustable frequency drive or the filter. **The most common functions can be programmed here.**

The [Quick Menu] consists of:

- **Q1: My Personal Menu**
- **Q2: Quick Set-up**
- **Q3: Function Set-ups (drive LCP only)**
- **Q5: Changes Made**
- **Q6: Loggings**

The Function set-up provides quick and easy access to all parameters required for the majority of water and wastewater applications including variable torque, constant torque, pumps, dosing pumps, well pumps, booster pumps, mixer pumps, aeration blowers and other pump and fan applications. Among other features, it also includes parameters for selecting which variables to display on the LCP, digital preset speeds, scaling of analog references, closed-loop single zone and multi-zone applications and specific functions related to water and wastewater applications.

Since the active filter is an integrated part of the low harmonic drive, only a minimum of programming is necessary. The filter LCP is mainly used to display information about filter operation such as THD of voltage or current, corrected current, injected current or Cos ϕ and True Power Factor.

The Quick Menu parameters can be accessed immediately unless a password has been created via par. 0-60, 0-61, 0-65 or 0-66.

It is possible to switch directly between Quick Menu mode and Main Menu mode.

[Main Menu]

is used for programming all parameters.

The Main Menu parameters can be accessed immediately unless a password has been created via par. 0-60, 0-61, 0-65 or 0-66. For the majority of water and wastewater applications it is not necessary to access the main menu parameters, but instead the quick menu, quick set-up and function set-ups provide the simplest and quickest access to the typical required parameters.

It is possible to switch directly between Main Menu mode and Quick Menu mode.

Parameter shortcut can be carried out by pressing down the **[Main Menu]** key for 3 seconds. The parameter shortcut allows direct access to any parameter.

[Alarm Log]

displays an alarm list of the five latest alarms (numbered A1-A5). To obtain additional details about an alarm, use the arrow keys to navigate to the alarm number and press [OK]. Information is displayed about the condition of the adjustable frequency drive or filter before it enters alarm mode.

[Back]

reverts to the previous step or layer in the navigation structure.

[Cancel]

the last change or command will be canceled as long as the display has not been changed.

[Info]

displays information about a command, parameter, or function in any display window. [Info] provides detailed information when needed.
Exit Info mode by pressing either [Info], [Back], or [Cancel].

5

Navigation keys

The four navigation arrows are used to navigate between the different choices available in **[Quick Menu]**, **[Main Menu]** and **[Alarm Log]**. Use the keys to move the cursor.

[OK]

is used for choosing a parameter marked by the cursor and for enabling the change of a parameter.

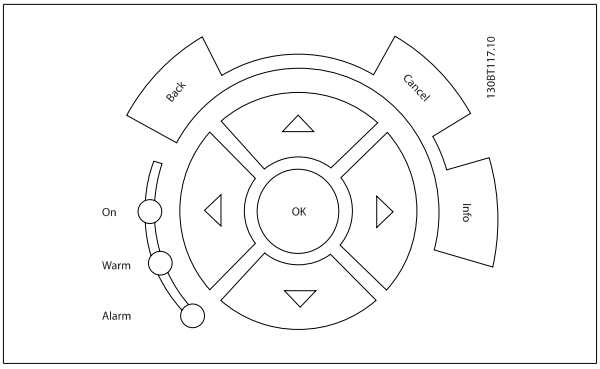

Operation keys

for local control are found at the bottom of the control panel.

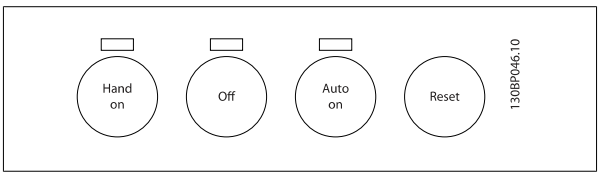

[Hand on]

enables control of the adjustable frequency drive via the GLCP. [Hand on] also starts the motor, and makes it possible to give the motor speed reference using the arrow keys. The key can be *Enabled* [1] or *Disabled* [0] via par. *0-40 [Hand on] Key on LCP.*

The following control signals will still be active when [Hand on] is activated:

- [Hand on] - [Off] - [Auto on]
- Reset
- Coasting stop inverse (motor coasting to stop)
- Reversing
- Set-up select lsb - Set-up select msb
- Stop command from serial communication
- Quick stop
- DC brake

NOTE!
External stop signals activated by means of control signals or a serial bus will override a "start" command via the LCP.

[Off]
stops the connected motor (when pressed on the drive LCP) or the filter (when pressed on the filter LCP). The key can be *Enabled* [1] or *Disabled* [0] via par. *0-41 [Off] key on LCP.* If no external stop function is selected and the [Off] key is inactive, the motor can only be stopped by disconnecting the line power supply.

[Auto on]
enables the adjustable frequency drive to be controlled via the control terminals and/or serial communication. When a start signal is applied on the control terminals and/or the bus, the adjustable frequency drive will start. The key can be *Enabled* [1] or *Disabled* [0] via par. *0-42 [Auto on] key on LCP.*

NOTE!
[Auto on] must be pressed on the filter LCP.

NOTE!
An active HAND-OFF-AUTO signal via the digital inputs has higher priority than the control keys [Hand on] – [Auto on].

[Reset]
is used for resetting the adjustable frequency drive or filter after an alarm (trip). The key can be *Enabled* [1] or *Disabled* [0] via par. 0-43 *Reset Keys on LCP*.

The parameter shortcut
can be carried out by holding down the [Main Menu] key for 3 seconds. The parameter shortcut allows direct access to any parameter.

5.1.3 Changing Data

1. Press the [Quick Menu] or [Main Menu] key.
2. Use [▲] and [▼] keys to find parameter group to edit.
3. Press the [OK] key.
4. Use [▲] and [▼] keys to find parameter to edit.
5. Press the [OK] key.
6. Use the [▲] and [▼] keys to select the correct parameter setting. Or, to move to digits within a number, use the keys. The cursor indicates the digit selected to be changed. The [▲] key increases the value, the [▼] key decreases the value.
7. Press the [Cancel] key to disregard the change, or press the [OK] key to accept the change and enter the new setting.

5.1.4 Changing a text value

If the selected parameter is a text value, it can be changed by using the up/down navigation keys.
The up key increases the value, and the down key decreases the value. Place the cursor on the value to be saved and press [OK].

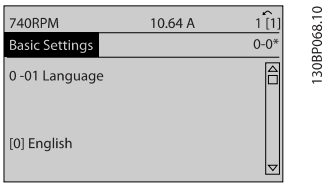

Figure 5.1: Display example.

5.1.5 Changing a group of numeric data values

If the chosen parameter represents a numeric data value, change the chosen data value by means of the [◄] and [►] navigation keys as well as the up/down [▲] [▼] navigation keys. Use the ◄] and [►] navigation keys to move the cursor horizontally.

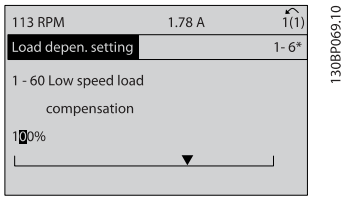

Figure 5.2: Display example.

Use the up/down navigation keys to change the data value. The up key increases the data value, while the down key reduces it. Place the cursor on the value to be saved and press [OK].

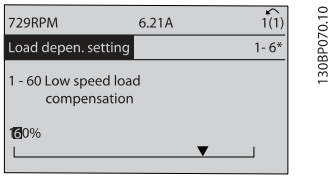

Figure 5.3: Display example.

5.1.6 Changing of data value, Step-by-Step

Certain parameters can be changed step-by-step or by an infinite number of variables. This applies to par. 1-20 *Motor Power [kW]*, par. 1-22 *Motor Voltage* and par. 1-23 *Motor Frequency*.
The parameters are changed both as a group of numeric data values, and as numeric data values using an infinite number of variables.

5.1.7 Readout and programming of indexed parameters

Parameters are indexed when placed in a rolling stack.
Par. 15-30 *Fault Log: Error Code* to par. 15-32 *Fault Log: Time* contain a fault log which can be read out. Choose a parameter, press [OK], and use the up/down navigation keys to scroll through the value log.

Use par. 3-10 *Preset Reference* as another example:
Choose the parameter, press [OK], and use the up/down navigation keys to scroll through the indexed values. To change the parameter value, select the indexed value and press [OK]. Change the value by using the up/down keys. Press [OK] to accept the new setting. Press [Cancel] to abort. Press [Back] to leave the parameter.

5.1.8 Tips and tricks

*	For the majority of water and wastewater applications, the Quick Menu, Quick Set-up and Function Set-ups provide the simplest and quickest access to all of the typical parameters required.
*	Whenever possible, performing an AMA will ensure best shaft performance.
*	Display contrast can be adjusted by pressing [Status] and [▲] for a darker display, or by pressing [Status] and [▼] for a brighter display.
*	Under [Quick Menu] and [Changes Made], all the parameters that have been changed from the factory settings are displayed.
*	Press and hold the [Main Menu] key for 3 seconds to access any parameter.
*	For service purposes, it is recommended to copy all parameters to the LCP, see par 0-50 for further information.

Table 5.1: Tips and tricks

5.1.9 Quick Transfer of Parameter Settings When Using GLCP

Once the set-up of an adjustable frequency drive is complete, it is recommended to store (backup) the parameter settings in the GLCP or on a PC via MCT 10 Set-up Software Tool.

Stop the motor before performing any of these operations,.

Data storage in LCP:

1. Go to par. 0-50 *LCP Copy*
2. Press the [OK] key
3. Select "All to LCP"
4. Press the [OK] key

All parameter settings are now stored in the GLCP indicated by the progress bar. When 100% is reached, press [OK].

The GLCP can now be connected to another adjustable frequency drive and the parameter settings copied to this adjustable frequency drive.

Data transfer from LCP to adjustable frequency drive:

1. Go to par. 0-50 *LCP Copy*
2. Press the [OK] key
3. Select "All from LCP"
4. Press the [OK] key

The parameter settings stored in the GLCP are now transferred to the adjustable frequency drive indicated by the progress bar. When 100% is reached, press [OK].

5.1.10 Initialization to Default Settings

There are two ways to initialize the adjustable frequency drive to default: Recommended initialization and manual initialization.
Please be aware that they have different impacts according to the below description.

Recommended initialization (via par. 14-22 *Operation Mode*)

1. Select par. 14-22 *Operation Mode*
2. Press [OK]
3. Select "Initialization" (for NLCP select "2")
4. Press [OK]
5. Disconnect the power from the unit and wait for the display to turn off.
6. Reconnecting the power resets the adjustable frequency drive. Note that first start-up takes a few more seconds
7. Press [Reset]

Par. 14-22 *Operation Mode* initializes all except:
Par. 14-50 *RFI filter*
Par. O-30 *Protocol*
Par. O-31 *Address*
Par. 8-32 *FC Port Baud Rate*
Par. 8-35 *Minimum Response Delay*
Par. O-36 *Max Response Delay*
Par. 8-37 *Max Inter-Char Delay*
Par. 15-00 *Operating Hours* to par. 15-05 *Overvolts*
Par. 15-20 *Historic Log: Event* to par. 15-22 *Historic Log: Time*
Par. 15-30 *Fault Log: Error Code* to par. 15-32 *Fault Log: Time*

NOTE!
Parameters selected in par. 0-25 *My Personal Menu* will remain present with the default factory setting.

Manual initialization

NOTE!
When carrying out manual initializationrestore, serial communication, RFI filter settings and fault log settings are reset.
Removes parameters selected in par. 0-25 *My Personal Menu*.

1. Disconnect from the line power and wait until the display turns off.

2a. Press [Status] - [Main Menu] - [OK] at the same time while powering up the Graphical LCP (GLCP)

2b. Press [Menu] while powering up for LCP 101, Numerical Display

3. Release the keys after 5 s

4. The adjustable frequency drive is now programmed according to default settings

This parameter initializes all except:
Par. 15-00 *Operating Hours*
Par. 15-03 *Power-ups*
Par. 15-04 *Overtemps*
Par. 15-05 *Overvolts*

5.1.11 RS-485 Bus Connection

Both filter portion and adjustable frequency drive can be connected to a controller (or master) together with other loads using the RS-485 standard interface. Terminal 68 is connected to the P signal (TX+, RX+), while terminal 69 is connected to the N signal (TX-,RX-).

Always use parallel connections for the low harmonic drive to ensure that both filter and drive part are connected..

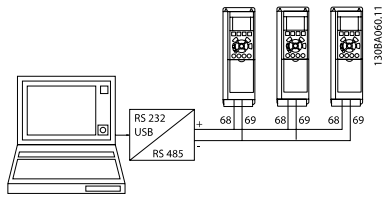

Figure 5.4: Connection example.

In order to avoid potential equalizing currents in the shield, ground the cable shield via terminal 61, which is connected to the frame via an RC link.

5

Bus termination

The RS-485 bus must be terminated by a resistor network at both ends. If the drive is the first or the last device in the RS-485 loop, set the switch S801 on the control card to ON.

For more information, see the paragraph *Switches S201, S202, and S801*.

5.1.12 How to connect a PC to the adjustable frequency drive

To control or program the adjustable frequency drive (and the filter part) from a PC, install the PC-based configuration tool MCT 10.

The PC is connected via a standard (host/device) USB cable to both devices, or via the RS-485 interface as shown in the *Design Guide, chapter How to Install > Installation of misc. connections*.

NOTE!

The USB connection is galvanically isolated from the supply voltage (PELV) and other high-voltage terminals. The USB connection is connected to protection ground on the adjustable frequency drive. Use only an isolated laptop as PC connection to the USB connector on the adjustable frequency drive.

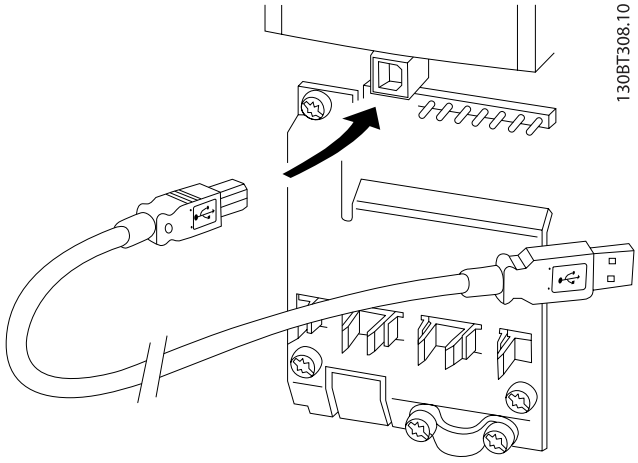

Figure 5.5: For control cable connections, see section on *Control Terminals*.

5.1.13 PC software tools

PC-based Configuration Tool MCT 10

The low harmonic drive is equipped with two serial communication ports. Danfoss provides a PC tool for communication between PC and adjustable frequency drive, PC-based Configuration Tool MCT 10. Please check the section on *Available Literature* for detailed information on this tool.

MCT 10 set-up software

MCT 10 has been designed as an easy to use interactive tool for setting parameters in our adjustable frequency drives. The software can be downloaded from the Danfoss internet site *http://www.*Danfoss*.com/BusinessAreas/DrivesSolutions/Softwaredownload/DDPC+Software+Program.htm*.
The MCT 10 set-up software will be useful for:

- Planning a communication network off-line. MCT 10 contains a complete adjustable frequency drive database
- Commissioning adjustable frequency drives on-line.
- Saving settings for all adjustable frequency drives.
- Replacing an adjustable frequency drive in a network.
- Simple and accurate documentation of adjustable frequency drive settings after commissioning.
- Expanding an existing network
- Adjustable frequency drives developed in the future will be fully supported.

MCT 10 set-up software supports Profibus DP-V1 via a master class 2 connection. This makes it possible to access on-line read/write parameters in an adjustable frequency drive via the Profibus network. This will eliminate the need for an extra communication network.

Save adjustable frequency drive settings:

1. Connect a PC to the unit via USB com port. (NOTE: Use a PC, which is isolated from the line power, in conjunction with the USB port. Failure to do so may damage equipment.)
2. Open MCT 10 Set-up Software
3. Choose "Read from drive"
4. Choose "Save as"

All parameters are now stored on the PC.

Load adjustable frequency drive settings:

1. Connect a PC to the adjustable frequency drive via the USB com port
2. Open MCT 10 Set-up software
3. Choose "Open"– stored files will be shown.
4. Open the appropriate file
5. Choose "Write to drive"

All parameter settings are now transferred to the adjustable frequency drive.

A separate manual for MCT 10 Set-up Software is available*: MG.10.Rx.yy*.

The MCT 10 Set-up software modules

The following modules are included in the software package:

	MCT Set-up 10 Software Setting parameters Copy to and from adjustable frequency drives Documentation and print out of parameter settings incl. diagrams
	Ext. user interface Preventive Maintenance Schedule Clock settings Timed Action Programming Smart Logic Controller Set-up

5

Ordering number:

Please order the CD containing MCT 10 Set-up Software using code number 130B1000.

MCT 10 can also be downloaded from the Danfoss website: *WWW.DANFOSS.COM, Business Area: Motion Controls*.

6 How to Program the Low Harmonic Drive

6.1 How to Program the Adjustable Frequency Drive

6.1.1 Parameter Set-up

Overview of parameter groups

Group	Title	Function
0-	Operation/Display	Parameters related to the fundamental functions of the adjustable frequency drive, function of the LCP buttons and configuration of the LCP display.
1-	Load/Motor	Parameter group for motor settings.
2-	Brakes	Parameter group for setting brake features in the adjustable frequency drive.
3-	Reference / Ramps	Parameters for reference handling, defining limitations, and configuring the reaction of the adjustable frequency drive to changes.
4-	Limits / Warnings	Parameter group for configuring limits and warnings.
5-	Digital In/Out	Parameter group for configuring the digital inputs and outputs.
6-	Analog In/Out	Parameter group for configuring the analog inputs and outputs.
8-	Communication and Options	Parameter group for configuring communications and options.
9-	Profibus	Parameter group for Profibus-specific parameters.
10-	DeviceNet Serial Communication Bus	Parameter group for DeviceNet-specific parameters.
13-	Smart Logic	Parameter group for Smart Logic Control
14-	Special Functions	Parameter group for configuring special adjustable frequency drive functions.
15-	Drive Information	Parameter group containing adjustable frequency drive information such as operating data, hardware configuration and software versions.
16-	Data Readouts	Parameter group for data readouts, such as current references, voltages, control, alarm, warning and status words.
18-	Info and Readouts	This parameter group contains the last 10 Preventive Maintenance logs.
20-	Drive Closed-loop	This parameter group is used for configuring the closed-loop PID controller that controls the output frequency of the unit.
21-	Extended Closed-loop	Parameters for configuring the three extended closed-loop PID controllers.
22-	Application Functions	These parameters monitor water applications.
23-	Time-based Functions	These parameters are for actions to be performed on a daily or weekly basis, such as different references for working hours/non-working hours.
25-	Basic Cascade Controller Functions	Parameters for configuring the basic cascade controller for sequence control of multiple pumps.
26-	Analog I/0 Option MCB 109	Parameters for configuring the Analog I/0 Option MCB 109.
27-	Extended Cascade Control	Parameters for configuring the extended cascade control.
29-	Water Application Functions	Parameters for setting water specific functions.
31-	Bypass Option	Parameters for configuring the bypass option

Table 6.1: Parameter Groups

Parameter descriptions and selections are displayed on the Graphic LCP or Numeric LCP in the display area (See Section 5 for details.) Access the parameters by pressing the [Quick Menu] or [Main Menu] key on the control panel. The quick menu is used primarily for commissioning the unit at start-up by providing those parameters necessary to start operation. The main menu provides access to all the parameters for detailed application programming.

All digital input/output and analog input/output terminals are multifunctional. All terminals have factory default functions suitable for the majority of water applications but if other special functions are required, they must be programmed in parameter group 5 or 6.

6.1.2 Quick Menu Mode

The GLCP provides access to all parameters listed under the Quick Menus. To set parameters using the [Quick Menu] button:

Pressing [Quick Menu] the list indicates the different areas contained in the quick menu.

Efficient parameter set-up for water applications

The parameters can easily be set up for the vast majority of the water and wastewater applications only by using the **[Quick Menu]**.

The best way to set parameters using the [Quick Menu] is by following the steps below:

1. Press [Quick Set-up] for selecting basic motor settings, ramp times, etc.
2. Press [Function Set-ups] for setting up the required functionality of the adjustable frequency drive - if not already covered by the settings in [Quick Set-up].
3. Choose between *General Settings, Open-loop Settings* and *Closed-loop Settings*.

It is recommended to do the set-up in the order listed.

6

Figure 6.1: Quick Menu view.

Par.	Designation	[Units]
0-01	Language	
1-20	Motor Power	[kW]
1-22	Motor Voltage	[V]
1-23	Motor Frequency	[Hz]
1-24	Motor Current	[A]
1-25	Motor Nominal Speed	[RPM]
3-41	Ramp 1 Ramp-up Time	[s]
3-42	Ramp 1 Ramp-down Time	[s]
4-11	Motor Speed Low Limit	[RPM]
4-13	Motor Speed High Limit	[RPM]
1-29	Automatic Motor Adaptation (AMA)	

Table 6.2: Quick Set-up parameters. Please see section *Commonly Used Parameters - Explanations*

If *No Operation* is selected in terminal 27, no connection to +24 V on terminal 27 is necessary to enable start.
If *Coast Inverse* (factory default value) is selected in Terminal 27, a connection to +24V is necessary to enable start.

NOTE!
For detailed parameter descriptions, please see the following section on *Commonly Used Parameters - Explanations*.

6.1.3 Q1 My Personal Menu

Parameters defined by the user can be stored in Q1 My Personal Menu.

Select *My Personal Menu* to display only the parameters, which have been pre-selected and programmed as personal parameters. For example, a pump or equipment OEM may have pre-programmed these to be in My Personal Menu during factory commissioning to make on-site commissioning / fine tuning simpler. These parameters are selected in par. 0-25 *My Personal Menu*. Up to 20 different parameters can be defined in this menu.

Q1 My Personal Menu
20-21 Setpoint 1
20-93 PID Proportional Gain
20-94 PID Integral Time

6.1.4 Q2 Quick Set-up

The parameters in Q2 Quick Set-up are the basic parameters which are always needed to set up the adjustable frequency drive for operation.

Q2 Quick Set-up	
Parameter number and name	**Unit**
0-01 Language	
1-20 Motor Power	kW
1-22 Motor Voltage	V
1-23 Motor Frequency	Hz
1-24 Motor Current	A
1-25 Motor Nominal Speed	RPM
3-41 Ramp 1 Ramp-up Time	s
3-42 Ramp 1 Ramp-down Time	s
4-11 Motor Speed Low Limit	RPM
4-13 Motor Speed High Limit	RPM
1-29 Automatic Motor Adaptation (AMA)	

6.1.5 Q3 Function Set-ups

The function set-up provides quick and easy access to all parameters required for the majority of water and wastewater applications including variable torque, constant torque, pumps, dosing pumps, well pumps, booster pumps, mixer pumps, aeration blowers and other pump and fan applications. Among other features, it also includes parameters for selecting which variables to display on the LCP, digital preset speeds, scaling of analog references, closed-loop single zone and multi-zone applications and specific functions related to water and wastewater applications.

How to access the Function Set-up - example:

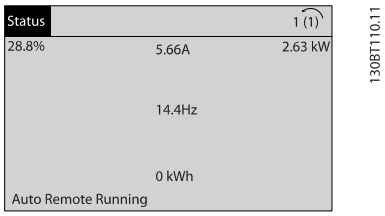

Figure 6.2: Step 1: Turn on the adjustable frequency drive (On LED lights)

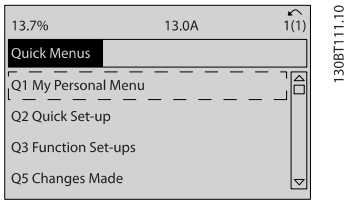

Figure 6.3: Step 2: Press the [Quick Menus] button (quick menu choices appear).

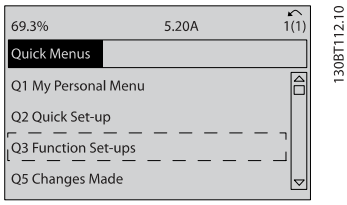

Figure 6.4: Step 3: Use the up/down navigation keys to scroll down to Function Set-ups. Press [OK].

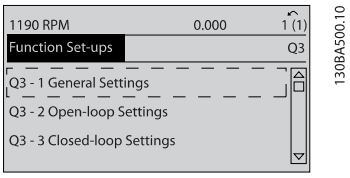

Figure 6.5: Step 4: Function Set-up choices appear. Choose 03-1 *General Settings*. Press [OK].

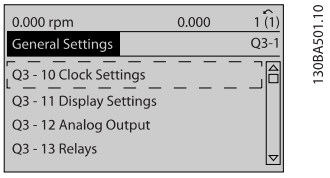

Figure 6.6: Step 5: Use the up/down navigation keys to scroll down to, e.g., 03-12 *Analog Outputs*. Press [OK].

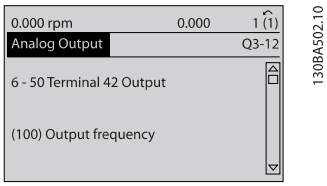

Figure 6.7: Step 6: Choose parameter 6-50 *Terminal 42 Output*. Press [OK].

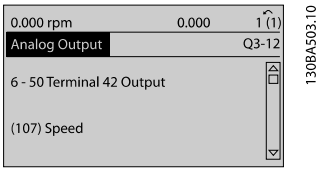

Figure 6.8: Step 7: Use the up/down navigation keys to select between the different choices. Press [OK].

The Function Set-up parameters are grouped in the following way:

Q3-1 General Settings			
Q3-10 Clock Settings	**Q3-11 Display Settings**	**Q3-12 Analog Output**	**Q3-13 Relays**
0-70 Set Date and Time	0-20 Display Line 1.1 Small	6-50 Terminal 42 Output	Relay 1 ⇒ 5-40 Function Relay
0-71 Date Format	0-21 Display Line 1.2 Small	6-51 Terminal 42 Output Min Scale	Relay 2 ⇒ 5-40 Function Relay
0-72 Time Format	0-22 Display Line 1.3 Small	6-52 Terminal 42 Output Max Scale	Option relay 7 ⇒ 5-40 Function Relay
0-74 DST/Summertime	0-23 Display Line 2 Large		Option relay 8 ⇒ 5-40 Function Relay
0-76 DST/Summertime Start	0-24 Display Line 3 Large		Option relay 9 ⇒ 5-40 Function Relay
0-77 DST/Summertime End	0-37 Display Text 1		
	0-38 Display Text 2		
	0-39 Display Text 3		

Q3-2 Open-loop Settings	
Q3-20 Digital Reference	**Q3-21 Analog Reference**
3-02 Minimum Reference	3-02 Minimum Reference
3-03 Maximum Reference	3-03 Maximum Reference
3-10 Preset Reference	6-10 Terminal 53 Low Voltage
5-13 Terminal 29 Digital Input	6-11 Terminal 53 High Voltage
5-14 Terminal 32 Digital Input	6-14 Terminal 53 Low Ref/Feedb. Value
5-15 Terminal 33 Digital Input	6-15 Terminal 53 High Ref/Feedb. Value

Q3-3 Closed-loop Settings	
Q3-30 Feedback Settings	**Q3-31 PID Settings**
1-00 Configuration Mode	20-81 PID Normal/Inverse Control
20-12 Reference/Feedb.Unit	20-82 PID Start Speed [RPM]
3-02 Minimum Reference	20-21 Setpoint 1
3-03 Maximum Reference	20-93 PID Proportional Gain
6-20 Terminal 54 Low Voltage	20-94 PID Integral Time
6-21 Terminal 54 High Voltage	
6-24 Terminal 54 Low Ref/Feedb Value	
6-25 Terminal 54 High Ref/Feedb Value	
6-00 Live Zero Timeout Time	
6-01 Live Zero Timeout Function	

6

6.1.6 Q5 Changes Made

Q5 Changes Made can be used for fault finding.

Select *Changes made* to get information about:

- The last 10 changes. Use the up/down navigation keys to scroll between the last 10 changed parameters.
- The changes made since default setting.

Select *Loggings* to get information about the display line readouts. The information is shown in graphs.
Only display parameters selected in par. 0-20 and par. 0-24 can be viewed. It is possible to store up to 120 samples in the memory for later reference.

Please notice that the parameters listed in the below tables for Q5 only serve as examples since they will vary depending on the programming of the particular adjustable frequency drive.

Q5-1 Last 10 Changes
20-94 PID Integral Time
20-93 PID Proportional Gain

Q5-2 Since Factory Setting
20-93 PID Proportional Gain
20-94 PID Integral Time

Q5-3 Input Assignments
Analog Input 53
Analog Input 54

6.1.7 Q6 Loggings

Q6 Loggings can be used for fault finding.

Please notice that the parameters listed in the table for Q6 below only serve as examples since they will vary depending on the programming of the particular adjustable frequency drive.

Q6 Loggings
Reference
Analog Input 53
Motor Current
Frequency
Feedback
Energy Log
Trending Cont Bin
Trending Timed Bin
Trending Comparison

6.1.8 Main Menu Mode

Both the GLCP and NLCP provide access to the main menu mode. Select main menu mode by pressing the [Main Menu] key. Figure 6.2 shows the resulting read-out, which appears on the display of the GLCP.
Lines 2 through 5 on the display show a list of parameter groups which can be chosen by toggling the up and down buttons.

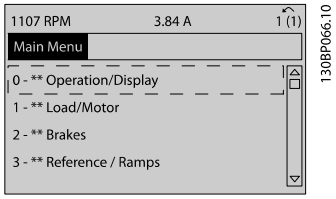

Figure 6.9: Display example.

Each parameter has a name and number which remain the same regardless of the programming mode. In main menu mode, the parameters are divided into groups. The first digit of the parameter number (from the left) indicates the parameter group number.

All parameters can be changed in the Main Menu. The configuration of the unit (par. 1-00 *Configuration Mode*) will determine other parameters available for programming. For example, selecting Closed-loop enables additional parameters related to closed-loop operation. Option cards added to the unit enable additional parameters associated with the option device.

6.1.9 Parameter Selection

In main menu mode, the parameters are divided into groups. Select a parameter group using the navigation keys.
The following parameter groups are accessible:

Group no.	Parameter group:
0	Operation/Display
1	Load/Motor
2	Brakes
3	References/Ramps
4	Limits/Warnings
5	Digital In/Out
6	Analog In/Out
8	Comm. and Options
9	Profibus
10	CAN Fieldbus
11	LonWorks
13	Smart Logic
14	Special Functions
15	Drive Information
16	Data Readouts
18	Data Readouts 2
20	Drive Closed-loop
21	Ext. Closed-loop
22	Application Functions
23	Time-based Functions
24	Fire Mode
25	Cascade Controller
26	Analog I/O Option MCB 109

Table 6.3: Parameter groups.

After selecting a parameter group, choose a parameter by means of the navigation keys.
The middle section on the GLCP display shows the parameter number and name, as well as the selected parameter value.

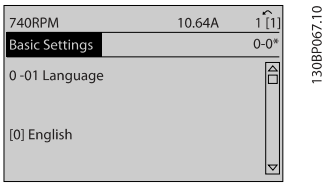

Figure 6.10: Display example.

6.2 How to Program the Active Filter

The factory settings for the filter part of the Low Harmonic Drive are chosen for optimal operation with a minimum of additional programming. All CT-values, as well as frequency, voltage levels and other values directly linked to the drive configuration are pre-set.

It is not recommended to change any other parameters influencing the filter operation. However, the selection of readouts and what information to be displayed on the LCP status lines can be made to fit individual preferences.

To set up the filter, two steps are necessary:

- Change the nominal voltage in par. 300-10
- Make sure the filter is in auto mode (press the Auto On button on the LCP)

Overview of parameter groups for the filter part

Group	Title	Function
0-	Operation/Display	Parameters related to the fundamental functions of the filter, function of the LCP buttons and configuration of the LCP display.
5-	Digital In/Out	Parameter group for configuring the digital inputs and outputs.
8-	Communication and Options	Parameter group for configuring communications and options.
14-	Special Functions	Parameter group for configuring special functions.
15-	Unit Information	Parameter group containing active filter information such as operating data, hardware configuration and software versions.
16-	Data Readouts	Parameter group for data readouts, such as current references, voltages, control, alarm, warning and status words.
300-	AF Settings	Parameter group for setting the active filter. Apart from par. 300-10, *Active Filter Nominal Voltage*, it is not recommended to change the settings of this parameter group
301-	AF Readouts	Parameter group for the filter readouts.

Table 6.4: Parameter groups

A list of all parameters accessible from the filter LCP can be found in the section *Parameter Options - Filter*. A more detailed description of the active filter parameters can be found in the VLT Active Filter AAF005 Manual, *MG90VXYY*

6.2.1 Using the Low Harmonic Drive in NPN Mode

The default setting for par. 5-00, *Digital I/O Mode* is PNP mode. If NPN mode is desired, it is necessary to change the wiring in the filter part of the Low Harmonic Drive. Before changing the setting in par. 5-00 to NPN mode, the wire connected to 24 V (control terminal 12 or 13) must be changed to terminal 20 (ground).

6.3 VLT AQUA Drive - Description of Common Parameters

6.3.1 Main Menu

The main menu includes all available parameters in the VLT® AQUA Drive FC 200 adjustable frequency drive.
All parameters are grouped logically with a group name indicating the function of the parameter group.
All parameters are listed by name and number in the section *Parameter Options* in this Instruction Manual.

All parameters included in the quick menus (Q1, Q2, Q3, Q5 and Q6) can be found in the following.

Some of the most commonly used parameters for VLT® AQUA Drive applications are also explained in the following section.

For a detailed explanation of all parameters, please refer to the VLT® AQUA Drive Programming Guide MG.20.OX.YY which is available at www.danfoss.com or by ordering it from the local Danfoss office.

6.3.2 0-** Operation / Display

Parameters related to the fundamental functions of the adjustable frequency drive, function of the LCP buttons and configuration of the LCP display.

0-01 Language		
Option:		**Function:**
		Defines the language to be used in the display. The adjustable frequency drive can be delivered with 4 different language packages. English and German are included in all packages. English cannot be erased or manipulated.
[0] *	English	Part of Language packages 1 - 4
[1]	German	Part of Language packages 1 - 4
[2]	French	Part of Language package 1
[3]	Danish	Part of Language package 1
[4]	Spanish	Part of Language package 1
[5]	Italian	Part of Language package 1
[6]	Swedish	Part of Language package 1
[7]	Dutch	Part of Language package 1
[10]	Chinese	Language package 2
[20]	Finnish	Part of Language package 1
[22]	English US	Part of Language package 4
[27]	Greek	Part of Language package 4
[28]	Portuguese	Part of Language package 4
[36]	Slovenian	Part of Language package 3
[39]	Korean	Part of Language package 2
[40]	Japanese	Part of Language package 2
[41]	Turkish	Part of Language package 4
[42]	Traditional Chinese	Part of Language package 2
[43]	Bulgarian	Part of Language package 3
[44]	Serbian	Part of Language package 3
[45]	Romanian	Part of Language package 3

[46]	Hungarian	Part of Language package 3
[47]	Czech	Part of Language package 3
[48]	Polish	Part of Language package 4
[49]	Russian	Part of Language package 3
[50]	Thai	Part of Language package 2
[51]	Bahasa Indonesian	Part of Language package 2

0-20 Display Line 1.1 Small

Option:		**Function:**
		Select a variable for display in line 1, left position.
[0]	None	No display value selected
[37]	Display Text 1	Present control word
[38]	Display Text 2	Enables an individual text string to be written, for display in the LCP or to be read via serial communication.
[39]	Display Text 3	Enables an individual text string to be written, for display in the LCP or to be read via serial communication.
[89]	Date and Time Readout	Displays the current date and time.
[953]	Profibus Warning Word	Displays Profibus communication warnings.
[1005]	Readout Transmit Error Counter	View the number of CAN control transmission errors since the last power-up.
[1006]	Readout Receive Error Counter	View the number of CAN control receipt errors since the last power-up.
[1007]	Readout Bus-off Counter	View the number of Bus Off events since the last power-up.
[1013]	Warning Parameter	View a DeviceNet-specific warning word. One separate bit is assigned to every warning.
[1115]	LON Warning Word	Shows the LON-specific warnings.
[1117]	XIF Revision	Shows the version of the external interface file of the Neuron C chip on the LON option.
[1118]	LON Works Revision	Shows the software version of the application program of the Neuron C chip on the LON option.
[1500]	Operating Hours	View the number of running hours of the adjustable frequency drive.
[1501]	Running Hours	View the number of running hours of the motor.
[1502]	kWh Counter	View the line power consumption in kWh.
[1600]	Control Word	View the control word sent from the adjustable frequency drive via the serial communication port in hex code.
[1601] *	Reference [Unit]	Total reference (sum of digital/analog/preset/bus/freeze ref./catch up and slow-down) in selected unit.
[1602]	Reference %	Total reference (sum of digital/analog/preset/bus/freeze ref./catch up and slow-down) in percent.
[1603]	Status Word	Present status word
[1605]	Main Actual Value [%]	One or more warnings in a Hex code
[1609]	Custom Readout	View the user-defined readouts as defined in par. 0-30, 0-31 and 0-32.
[1610]	Power [kW]	Actual power consumed by the motor in kW.
[1611]	Power [hp]	Actual power consumed by the motor in HP.
[1612]	Motor Voltage	Voltage supplied to the motor.
[1613]	Motor Frequency	Motor frequency, i.e., the output frequency of the adjustable frequency drive in Hz.
[1614]	Motor Current	Phase current of the motor measured as effective value.
[1615]	Frequency [%]	Motor frequency, i.e., the output frequency from the adjustable frequency drive in percent.
[1616]	Torque [Nm]	Present motor load as a percentage of the rated motor torque.
[1617]	Speed [RPM]	Speed in RPM (revolutions per minute), i.e., the motor shaft speed in closed-loop based on the entered motor nameplate data, the output frequency and the load on the adjustable frequency drive.

[1618]	Motor Thermal	Thermal load on the motor, calculated by the ETR function. See also parameter group 1-9* Motor Temperature.
[1622]	Torque [%]	Shows the actual torque produced, in percentage.
[1630]	DC Link Voltage	Intermediate circuit voltage in the adjustable frequency drive.
[1632]	BrakeEnergy/s	Present braking energy transferred to an external brake resistor. Stated as an instantaneous value.
[1633]	BrakeEnergy/2 min	Braking energy transferred to an external brake resistor. The mean power is calculated continuously for the most recent 120 seconds.
[1634]	Heatsink Temp.	Present heatsink temperature of the adjustable frequency drive. The cut-out limit is 203° ± 9°F [95° ± 5°C]; cutting back in occurs at 158° ± 9°F [70° ± 5°C].
[1635]	Thermal Drive Load	Percentage load of the inverters
[1636]	Inv. Nom. Current	Nominal current of the adjustable frequency drive
[1637]	Inv. Max. Current	Maximum current of the adjustable frequency drive
[1638]	SL Control State	State of the event executed by the control
[1639]	Control Card Temp.	Temperature of the control card.
[1650]	External Reference	Sum of the external reference as a percentage, i.e., the sum of analog/pulse/bus.
[1652]	Feedback [Unit]	Signal value in units from the programmed digital input(s).
[1653]	DigiPot Reference	View the contribution of the digital potentiometer to the actual reference Feedback.
[1654]	Feedback 1 [Unit]	View the value of Feedback 1. See also par. 20-0*.
[1655]	Feedback 2 [Unit]	View the value of Feedback 2. See also par. 20-0*.
[1656]	Feedback 3 [Unit]	View the value of Feedback 3. See also par. 20-0*.
[1658]	PID Output [%]	Returns the drive closed-loop PID controller output value in percent.
[1659]	Adjusted Setpoint	Displays the actual operating setpoint after it is modified by flow compensation. See parameters 22-8*.
[1660]	Digital Input	Displays the status of the digital inputs. Signal low = 0; Signal high = 1. Regarding order, see par. 16-60. Bit 0 is at the extreme right.
[1661]	Terminal 53 Switch Setting	Setting of input terminal 53. Current = 0; Voltage = 1.
[1662]	Analog Input 53	Actual value at input 53 either as a reference or protection value.
[1663]	Terminal 54 Switch Setting	Setting of input terminal 54. Current = 0; Voltage = 1.
[1664]	Analog Input 54	Actual value at input 54 either as reference or protection value.
[1665]	Analog Output 42 [mA]	Actual value at output 42 in mA. Use par. 6-50 to select the variable to be represented by output 42.
[1666]	Digital Output [bin]	Binary value of all digital outputs.
[1667]	Freq. Input #29 [Hz]	Actual value of the frequency applied at terminal 29 as a pulse input.
[1668]	Freq. Input #33 [Hz]	Actual value of the frequency applied at terminal 33 as a pulse input.
[1669]	Pulse Output #27 [Hz]	Actual value of pulses applied to terminal 27 in digital output mode.
[1670]	Pulse Output #29 [Hz]	Actual value of pulses applied to terminal 29 in digital output mode.
[1671]	Relay Output [bin]	View the setting of all relays.
[1672]	Counter A	View the present value of Counter A.
[1673]	Counter B	View the present value of Counter B.
[1675]	Analog input X30/11	Actual value of the signal on input X30/11 (General Purpose I/O Card. Option)
[1676]	Analog input X30/12	Actual value of the signal on input X30/12 (General Purpose I/O Card. Optional)
[1677]	Analog output X30/8 [mA]	Actual value at output X30/8 (General Purpose I/O Card. Optional) Use Par. 6-60 to select the variable to be shown.
[1680]	Serial com. bus CTW 1	Control word (CTW) received from the bus master.

[1682]	Serial com. bus REF 1	Main reference value sent with control word via the serial communications network, e.g., from the BMS, PLC or other master controller.
[1684]	Comm. Option STW	Extended serial communication option status word.
[1685]	ADF Port CTW 1	Control word (CTW) received from the bus master.
[1686]	AFD Port REF 1	Status word (STW) sent to the bus master.
[1690]	Alarm Word	One or more alarms in a Hex code (used for serial communications)
[1691]	Alarm Word 2	One or more alarms in a Hex code (used for serial communications)
[1692]	Warning Word	One or more warnings in a Hex code (used for serial communications)
[1693]	Warning Word 2	One or more warnings in a Hex code (used for serial communications)
[1694]	Ext. Status Word	One or more status conditions in a Hex code (used for serial communications)
[1695]	Ext. Status Word 2	One or more status conditions in a Hex code (used for serial communications)
[1696]	Maintenance Word	The bits reflect the status for the preventive maintenance events programmed in parameter group 23-1*
[1830]	Analog Input X42/1	Shows the value of the signal applied to terminal X42/1 on the Analog I/O card.
[1831]	Analog Input X42/3	Shows the value of the signal applied to terminal X42/3 on the Analog I/O card.
[1832]	Analog Input X42/5	Shows the value of the signal applied to terminal X42/5 on the Analog I/O card.
[1833]	Analog Out X42/7 [V]	Shows the value of the signal applied to terminal X42/7 on the Analog I/O card.
[1834]	Analog Out X42/9 [V]	Shows the value of the signal applied to terminal X42/9 on the Analog I/O card.
[1835]	Analog Out X42/11 [V]	Shows the value of the signal applied to terminal X42/11 on the Analog I/O card.
[2117]	Ext. 1 Reference [Unit]	The value of the reference for extended Closed-loop Controller 1
[2118]	Ext. 1 Feedback [Unit]	The value of the feedback signal for extended Closed-loop Controller 1
[2119]	Ext. 1 Output [%]	The value of the output from extended Closed-loop Controller 1
[2137]	Ext. 2 Reference [Unit]	The value of the reference for extended Closed-loop Controller 2
[2138]	Ext. 2 Feedback [Unit]	The value of the feedback signal for extended Closed-loop Controller 2
[2139]	Ext. 2 Output [%]	The value of the output from extended Closed-loop Controller 2
[2157]	Ext. 3 Reference [Unit]	The value of the reference for extended Closed-loop Controller 3
[2158]	Ext. 3 Feedback [Unit]	The value of the feedback signal for extended Closed-loop Controller 3
[2159]	Ext. Output [%]	The value of the output from extended Closed-loop Controller 3
[2230]	No-Flow Power	The calculated No-Flow Power for the actual operating speed
[2580]	Cascade Status	Status for the operation of the cascade controller
[2581]	Pump Status	Status for the operation of each individual pump controlled by the cascade controller
[2791]	Cascade Reference	Reference output for use with follower drives.
[2792]	% Of Total Capacity	Readout parameter to show the system operating point as a % capacity of total system capacity.
[2793]	Cascade Option Status	Readout parameter to show the status of the cascade system.

0-21 Display Line 1.2 Small

Option:		**Function:**
		Select a variable for display in line 1, middle position.
[1662] *	Analog input 53	The options are the same as those listed for par. 0-20 *Display Line 1.1 Small*.

0-22 Display Line 1.3 Small

Option:		**Function:**
		Select a variable for display in line 1, right position.
[1614] *	Motor Current	The options are the same as those listed for par. 0-20 *Display Line 1.1 Small*.

0-23 Display Line 2 Large

Option:		Function:
		Select a variable for display in line 2.
[1615] *	Frequency	The options are the same as those listed for par. 0-20 *Display Line 1.1 Small*

0-24 Display Line 3 Large

Option:		Function:
[1652] *	Feedback [Unit]	The options are the same as those listed for par. 0-20 *Display Line 1.1 Small*.
		Select a variable for display in line 2.

0-37 Display Text 1

Range:		Function:
0*	[0 - 0]	In this parameter, it is possible to write an individual text string for display in the LCP or to be read via serial communication. If it is to be displayed permanently, select Display Text 1 in par. 0-20 *Display Line 1.1 Small*, par. 0-21 *Display Line 1.2 Small*, par. 0-22 *Display Line 1.3 Small*, par. 0-23 *Display Line 2 Large* or par. 0-24 *Display Line 3 Large*. Use the ▲ or ▼ buttons on the LCP to change a character. Use the ◄ and ► buttons to move the cursor. When a character is highlighted by the cursor, it can be changed. Use the ▲ or ▼ buttons on the LCP to change a character. A character can be inserted by placing the cursor between two characters and pressing ▲ or ▼.

0-38 Display Text 2

Range:		Function:
0*	[0 - 0]	In this parameter, it is possible to write an individual text string for display in the LCP or to be read via serial communication. If to be displayed permanently select Display Text 2 in par. 0-20 *Display Line 1.1 Small*, par. 0-21 *Display Line 1.2 Small*, par. 0-22 *Display Line 1.3 Small*, par. 0-23 *Display Line 2 Large* or par. 0-24 *Display Line 3 Large*. Use the ▲ or ▼ buttons on the LCP to change a character. Use the ◄ and ► buttons to move the cursor. When a character is highlighted by the cursor, this character can be changed. A character can be inserted by placing the cursor between two characters and pressing ▲ or ▼.

0-39 Display Text 3

Range:		Function:
0*	[0 - 0]	In this parameter, it is possible to write an individual text string for display in the LCP or to be read via serial communication. If it is to be displayed permanently, select Display Text 3 in par. 0-20 *Display Line 1.1 Small*,par. 0-21 *Display Line 1.2 Small*, par. 0-22 *Display Line 1.3 Small*, par. 0-23 *Display Line 2 Large* or par. 0-24 *Display Line 3 Large*. Use the ▲ or ▼ buttons on the LCP to change a character. Use the ◄ and ► buttons to move the cursor. When a character is highlighted by the cursor, this character can be changed. A character can be inserted by placing the cursor between two characters and pressing ▲ or ▼.

0-70 Set Date and Time

Range:		Function:
2000-01-01 00:00 – 2099-12-01 23:59 *	[2000-01-01 00:00]	Sets the date and time of the internal clock. The format to be used is set in par. 0-71 and 0-72.

NOTE!
This parameter does not display the actual time. This can be read in par. 0-89. The clock will not begin counting until a setting different from default has been made.

6

0-71 Date Format		
Option:		**Function:**
[0] *	YYYY-MM-DD	Sets the date format to be used in the LCP.
[1]	DD-MM-YYYY	Sets the date format to be used in the LCP.
[2]	MM/DD/YYYY	Sets the date format to be used in the LCP.

0-72 Time Format		
Option:		**Function:**
		Sets the time format to be used in the LCP.
[0] *	24 h	
[1]	12 h	

0-74 DST/Summertime		
Option:		**Function:**
		Choose how Daylight Saving Time/Summertime should be handled. For manual DST/Summertime enter the start date and end date in par. 0-76 *DST/Summertime Start* and par. 0-77 *DST/Summertime End*.
[0] *	OFF	
[2]	Manual	

0-76 DST/Summertime Start		
Range:		**Function:**
Application dependent*	[Application dependant]	Sets the date and time when summertime/DST starts. The date is programmed in the format selected in par. 0-71 *Date Format*.

0-77 DST/Summertime End		
Range:		**Function:**
Application dependent*	[Application dependant]	Sets the date and time when summertime/DST ends. The date is programmed in the format selected in par. 0-71 *Date Format*.

6.3.3 General Settings, 1-0*

Define whether the adjustable frequency drive operates in open-loop or closed-loop.

1-00 Configuration Mode		
Option:		**Function:**
[0] *	Open-loop	Motor speed is determined by applying a speed reference or by setting desired speed when in Hand Mode. Open-loop is also used if the adjustable frequency drive is part of a closed-loop control system based on an external PID controller providing a speed reference signal as output.
[3]	Closed-loop	Motor speed will be determined by a reference from the built-in PID controller varying the motor speed as part of a closed-loop control process (e.g., constant pressure or flow). The PID controller must be configured in par. 20-** or via the function set-ups accessed by pressing the [Quick Menu] button.

NOTE!
This parameter cannot be changed when the motor is running.

NOTE!
When set for closed-loop, the commands reversing and start reversing will not reverse the direction of the motor.

1-20 Motor Power [kW]

Range:		Function:
Application dependent*	[Application dependant]	Enter the nominal motor power in kW according to the motor nameplate data. The default value corresponds to the nominal rated output of the unit. This parameter cannot be adjusted while the motor is running. Depending on the choices made in par. 0-03 *Regional Settings*, either par. 1-20 *Motor Power [kW]* or par. 1-21 *Motor Power [HP]* is made invisible.

1-22 Motor Voltage

Range:		Function:
Application dependent*	[Application dependant]	Enter the nominal motor voltage according to the motor nameplate data. The default value corresponds to the nominal rated output of the unit. This parameter cannot be adjusted while the motor is running.

1-23 Motor Frequency

Range:		Function:
Application dependent*	[20 - 1000 Hz]	Select the motor frequency value from the motor nameplate data.For 87 Hz operation with 230/400 V motors, set the nameplate data for 230 V/50 Hz. Adapt par. 4-13 *Motor Speed High Limit [RPM]* and par. 3-03 *Maximum Reference* to the 87 Hz application.

NOTE!
This parameter cannot be adjusted while the motor is running.

1-24 Motor Current

Range:		Function:
Application dependent*	[Application dependant]	Enter the nominal motor current value from the motor nameplate data. This data is used for calculating motor torque, motor thermal protection, etc.

NOTE!
This parameter cannot be adjusted while the motor is running.

1-25 Motor Nominal Speed

Range:		Function:
Application dependent*	[100 - 60000 RPM]	Enter the nominal motor speed value from the motor nameplate data. This data is used for calculating automatic motor compensations.

NOTE!
This parameter cannot be adjusted while the motor is running.

1-29 Automatic Motor Adaptation (AMA)

Option:		Function:
		The AMA function optimizes dynamic motor performance by automatically optimizing the advanced motor parameters par. 1-30 *Stator Resistance (Rs)* to par. 1-35 *Main Reactance (Xh)*) while the motor is stationary.
[0] *	Off	No function
[1]	Enable complete AMA	performs AMA of the stator resistance R_S, the rotor resistance R_r, the stator leakage reactance X_1, the rotor leakage reactance X_2 and the main reactance X_h.
[2]	Enable reduced AMA	Performs a reduced AMA of the stator resistance R_s in the system only. Select this option if an LC filter is used between the adjustable frequency drive and the motor.

Activate the AMA function by pressing [Hand on] after selecting [1] or [2]. See also the item *Automatic Motor Adaptation* in the Design Guide. After a normal sequence, the display will read: "Press [OK] to finish AMA". After pressing the [OK] key, the adjustable frequency drive is ready for operation.

NOTE:

- For the best adaptation of the adjustable frequency drive, run AMA on a cold motor
- AMA cannot be performed while the motor is running.

NOTE!
It is important to set motor par. 1-2* Motor Data correctly, since these form part of the AMA algorithm. An AMA must be performed to achieve optimum dynamic motor performance. It may take up to 10 min., depending on the motor power rating.

NOTE!
Avoid generating external torque during AMA.

NOTE!
If one of the settings in par. 1-2* Motor Data is changed, par. 1-30 *Stator Resistance (Rs)* to par. 1-39 *Motor Poles*, the advanced motor parameters, will return to the default setting.
This parameter cannot be adjusted while the motor is running.

NOTE!
Full AMA should be run without filter only while reduced AMA should be run with filter.

See section: *Application Examples > Automatic Motor Adaptation* in the Design Guide.

6.3.4 3-0* Reference Limits

Parameters for setting the reference unit, limits and ranges.

3-02 Minimum Reference

Range:		Function:
Application dependent*	[Application dependant]	Enter the Minimum Reference. The Minimum Reference is the lowest value obtainable by adding all references together. The Minimum Reference value and unit matches the configuration choice made in par. 1-00 *Configuration Mode* and par. 20-12 *Reference/Feedback Unit*, respectively. **NOTE!** This parameter is used in open-loop only.

3-03 Maximum Reference

Range:		Function:
Application dependent*	[Application dependant]	Enter the maximum acceptable value for the remote reference. The Maximum Reference value and unit matches the configuration choice made in par. 1-00 *Configuration Mode* and par. 20-12 *Reference/Feedback Unit*, respectively. **NOTE!** If operating with par. 1-00 *Configuration Mode* set for Closed-loop [3], par. 20-14 *Maximum Reference/Feedb.* must be used.

3-10 Preset Reference

Array [8]

Range:		Function:
0.00 %*	[-100.00 - 100.00 %]	

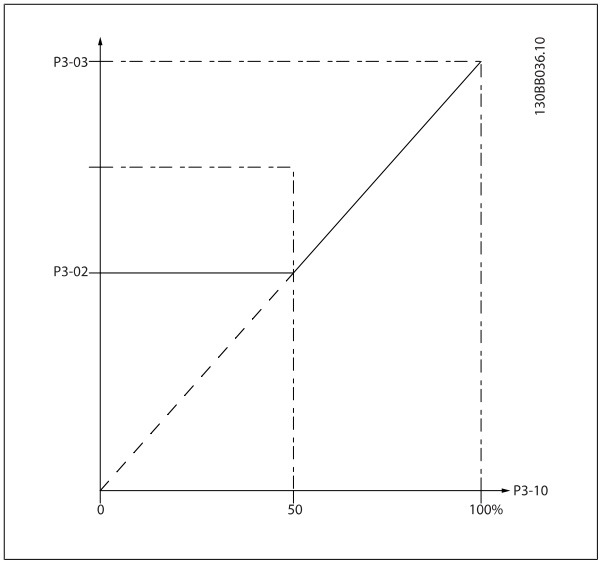

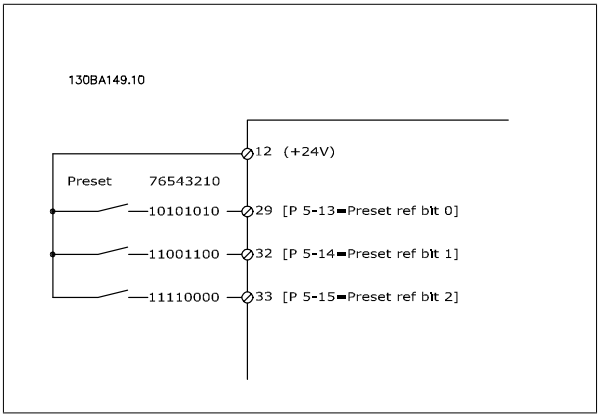

3-41 Ramp 1 Ramp-up Time

Range:		Function:
Application dependent*	[Application dependant]	Enter the ramp-up time, i.e., the acceleration time from 0 RPM to par. 1-25 *Motor Nominal Speed*. Choose a ramp-up time such that the output current does not exceed the current limit in par. 4-18 *Current Limit* during ramping. See ramp-down time in par. 3-42 *Ramp 1 Ramp-down Time*. $par.3-41 = \frac{tacc \times nnorm[par.1-25]}{ref[rpm]}[s]$

3-42 Ramp 1 Ramp-down Time

Range:		Function:
Application dependent*	[Application dependant]	Enter the ramp-down time, i.e., the deceleration time from par. 1-25 *Motor Nominal Speed* to 0 RPM. Choose a ramp-down time such that no overvoltage arises in the inverter due to regenerative operation of the motor, and such that the generated current does not exceed the current limit set in par. 4-18 *Current Limit*. See ramp-up time in par. 3-41 *Ramp 1 Ramp-up Time*. $par.3-42 = \frac{tdec \times nnorm[par.1-25]}{ref[rpm]}[s]$

6

3-84 Initial Ramp Time

Range:		Function:
0 s*	[0–60 s]	Enter the initial ramp-up time from zero speed to Motor Speed Low Limit, par. 4-11 or 4-12. Submersible deep well pumps can be damaged by running below minimum speed. A fast ramp time below minimum pump speed is recommended. This parameter may be applied as a fast ramp rate from zero speed to Motor Speed Low Limit.

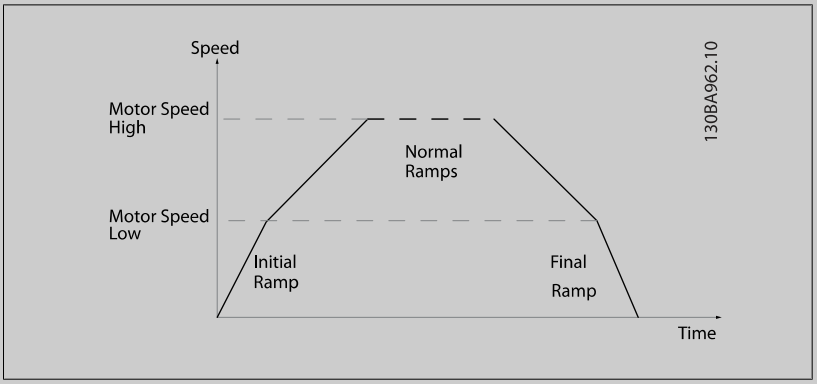

3-85 Check Valve Ramp Time

Range:		Function:
0 s*	[0–60 s]	In order to protect ball check valves in a stop situation, the check valve ramp can be utilized as a slow ramp rate from par. 4-11 *Motor Speed Low Limit [RPM]* or par. 4-12 *Motor Speed Low Limit [Hz]*, to Check Valve Ramp End Speed, set by the user in par. 3-86 or par. 3-87. When par. 3-85 is different from 0 seconds, the Check Valve Ramp Time is effectuated and will be used to ramp down the speed from Motor Speed Low Limit to the Check Valve End Speed in par. 3-86 or par. 3-87.

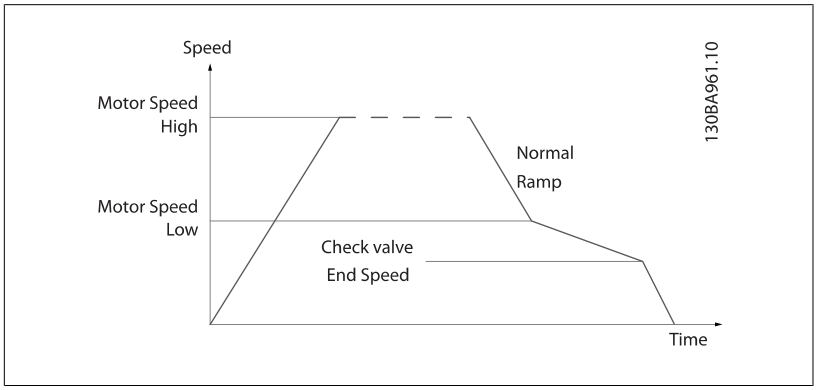

3-86 Check Valve Ramp End Speed [RPM]

Range:

0 [RPM]* [0 – Motor Speed Low Limit [RPM]]

Function:

Set the speed in [RPM] below Motor Speed Low Limit where the Check Valve is expected to be closed and the Check Valve no longer shall be active.

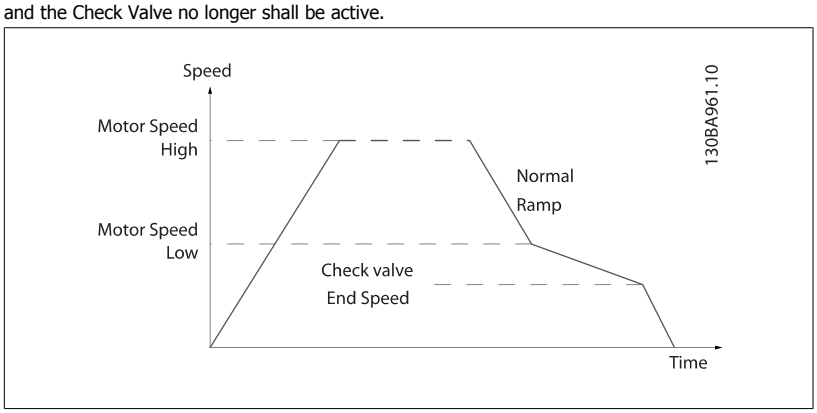

3-87 Check Valve Ramp End Speed [Hz]

Range:

0 [Hz]* [0 – Motor Speed Low Limit [Hz]]

Function:

Set the speed in [Hz] below Motor Speed Low Limit where the Check Valve Ramp will no longer be active.

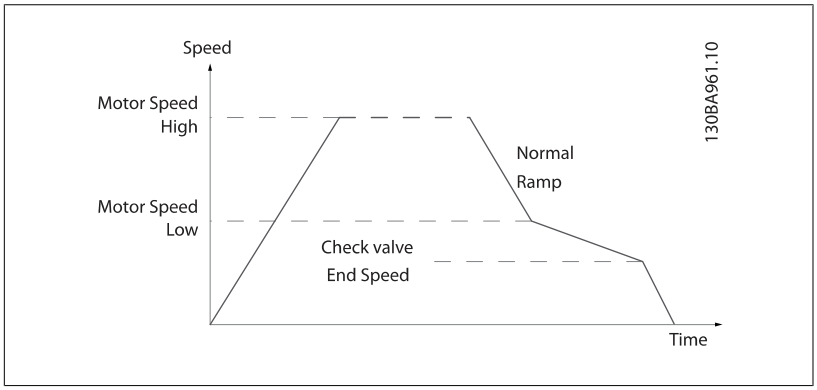

3-88 Final Ramp Time	
Range:	**Function:**
0 [s]* [0 – 60 [s]]	Enter the Final Ramp Time to be used when ramping down from Motor Speed Low Limit, par. 4-11 or 4-12, to zero speed. Submersible deep well pumps can be damaged by running below minimum speed. A fast ramp time below minimum pump speed is recommended. This parameter may be applied as a fast ramp rate from Motor Speed Low Limit to zero speed. 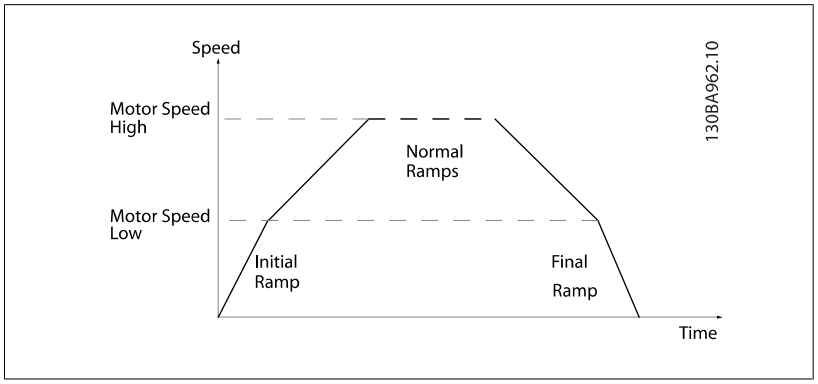

6.3.5 4-** Limits and Warnings

Parameter group for configuring limits and warnings.

4-11 Motor Speed Low Limit [RPM]	
Range:	**Function:**
Application dependent* [Application dependant]	Enter the minimum limit for motor speed. The Motor Speed Low Limit can be set to correspond to the manufacturer's recommended minimum motor speed. The Motor Speed Low Limit must not exceed the setting in par. 4-13 *Motor Speed High Limit [RPM]*.

4-13 Motor Speed High Limit [RPM]	
Range:	**Function:**
Application dependent* [Application dependant]	Enter the maximum limit for motor speed. The Motor Speed High Limit can be set to correspond to the manufacturer's maximum rated motor. The Motor Speed High Limit must exceed the setting in par. 4-11 *Motor Speed Low Limit [RPM]*. Only par. 4-11 *Motor Speed Low Limit [RPM]* or par. 4-12 *Motor Speed Low Limit [Hz]* will be displayed, depending on other parameters in the main menu, and depending on default settings dependant on global location.

NOTE!
Max. output frequency cannot exceed 10% of the inverter switching frequency (par. 14-01 *Switching Frequency*).

NOTE!
Any changes in par. 4-13 *Motor Speed High Limit [RPM]* will reset the value in par. 4-53 *Warning Speed High* to the same value as set in par. 4-13 *Motor Speed High Limit [RPM]*.

6.3.6 5-** Digital In/Out

Parameter group for configuring the digital input and output.

5-01 Terminal 27 Mode		
Option:		**Function:**
[0] *	Input	Defines terminal 27 as a digital input.
[1]	Output	Defines terminal 27 as a digital output.

Please note that this parameter cannot be adjusted while the motor is running.

6.3.7 5-1* Digital Inputs

Parameters for configuring the input functions for the input terminals.

The digital inputs are used for selecting various functions in the adjustable frequency drive. All digital inputs can be set to the following functions:

Digital input function	Select	Terminal
No operation	[0]	All *term 32, 33
Reset	[1]	All
Coast inverse	[2]	All
Coast and reset inverse	[3]	All
DC brake inverse	[5]	All
Stop inverse	[6]	All
External interlock	[7]	All
Start	[8]	All *term 18
Latched start	[9]	All
Reversing	[10]	All *term 19
Start reversing	[11]	All
Jog	[14]	All *term 29
Preset reference on	[15]	All
Preset ref bit 0	[16]	All
Preset ref bit 1	[17]	All
Preset ref bit 2	[18]	All
Freeze reference	[19]	All
Freeze output	[20]	All
Speed up	[21]	All
Slow	[22]	All
Set-up select bit 0	[23]	All
Set-up select bit 1	[24]	All
Pulse input	[32]	term 29, 33
Ramp bit 0	[34]	All
Line failure inverse	[36]	All
Run Permissive	[52]	
Hand start	[53]	
Auto-start	[54]	
DigiPot Increase	[55]	All
DigiPot Decrease	[56]	All
DigiPot Clear	[57]	All
Counter A (up)	[60]	29, 33
Counter A (down)	[61]	29, 33
Reset Counter A	[62]	All
Counter B (up)	[63]	29, 33
Counter B (down)	[64]	29, 33
Reset Counter B	[65]	All
Sleep Mode	[66]	
Reset Maintenance Word	[78]	
Lead Pump Start	[120]	
Lead Pump Alternation	[121]	
Pump 1 Interlock	[130]	
Pump 2 Interlock	[131]	
Pump 3 Interlock	[132]	

All = Terminals 18, 19, 27, 29, 32, X30/2, X30/3, X30/4. X30/ are the terminals on MCB 101.

Functions dedicated to only one digital input are stated in the associated parameter.

All digital inputs can be programmed to these functions:

[0]	No operation	No reaction to signals transmitted to terminal.
[1]	Reset	Resets adjustable frequency drive after a TRIP/ALARM. Not all alarms can be reset.
[2]	Coast inverse	Leaves motor in free mode. Logic '0' => coasting stop. (Default Digital input 27): Coasting stop, inverted input (NC).
[3]	Coast and reset inverse	Reset and coasting stop Inverted input (NC). Leaves motor in free mode and resets the adjustable frequency drive. Logic '0' => coasting stop and reset.
[5]	DC brake inverse	Inverted input for DC braking (NC). Stops motor by energizing it with a DC current for a certain time period. See par. 2-01 to par. 2-03. The function is only active when the value in par. 2-02 is different from 0. Logic '0' => DC braking.
[6]	Stop inverse	Stop Inverted function. Generates a stop function when the selected terminal goes from logical level '1' to '0'. The stop is performed according to the selected ramp time (par. 3-42 and par. 3-52). **NOTE!** When the adjustable frequency drive is at the torque limit and has received a stop command, it may not stop by itself. To ensure that the adjustable frequency drive stops, configure a digital output to *Torque limit & stop* [27] and connect this digital output to a digital input that is configured as coast.
[7]	External Interlock	Same function as Coasting stop, inverse, but External Interlock generates the alarm message 'external fault' on the display when the terminal which is programmed for Coast Inverse is logic '0'. The alarm message will also be active via digital outputs and relay outputs, if programmed for External Interlock. The alarm can be reset using a digital input or the [RESET] key if the cause for the External Interlock has been removed. A delay can be programmed in par. 22-00, External Interlock Time. After applying a signal to the input, the reaction described above will be delayed with the time set in par. 22-00.
[8]	Start	Select start for a start/stop command. Logic '1' = start, logic '0' = stop. (Default Digital input 18)
[9]	Latched start	Motor starts, if a pulse is applied for min. 2 ms. Motor stops when Stop inverse is activated
[10]	Reversing	Changes direction of motor shaft rotation. Select Logic '1' to reverse. The reversing signal only changes the direction of rotation. It does not activate the start function. Select both directions in par. 4-10 *Motor Speed Direction*. (Default Digital input 19).
[11]	Start reversing	Used for start/stop and for reversing on the same wire. Signals on start are not allowed at the same time.
[14]	Jog	Used for activating jog speed. See par. 3-11. (Default Digital input 29)
[15]	Preset reference on	Used for shifting between external reference and preset reference. It is assumed that *External/preset* [1] has been selected in par. 3-04. Logic '0' = external reference active; logic '1' = one of the eight preset references is active.
[16]	Preset ref bit 0	Enables a choice between one of the eight preset references according to the table below.
[17]	Preset ref bit 1	Enables a choice between one of the eight preset references according to the table below.
[18]	Preset ref bit 2	Enables a choice between one of the eight preset references according to the table below.

Preset ref. bit	2	1	0
Preset ref. 0	0	0	0
Preset ref. 1	0	0	1
Preset ref. 2	0	1	0
Preset ref. 3	0	1	1
Preset ref. 4	1	0	0
Preset ref. 5	1	0	1
Preset ref. 6	1	1	0
Preset ref. 7	1	1	1

[19]	Freeze ref	Freezes actual reference. The frozen reference is now the point of enable/condition for Speed up and Slow to be used. If Speed up/down is used, the speed change always follows ramp 2 (par. 3-51 and 3-52) in the range 0 - par. 3-03 *Maximum Reference*.
[20]	Freeze output	Freezes actual motor frequency (Hz). The frozen motor frequency is now the point of enable/condition for Speed up and Slow to be used. If Speed up/down is used, the speed change always follows ramp 2 (par. 3-51 and 3-52) in the range 0 - par. 1-23 *Motor Frequency*. **NOTE!** When Freeze output is active, the adjustable frequency drive cannot be stopped via a low 'start [13]' signal. Stop the adjustable frequency drive via a terminal programmed for Coasting inverse [2] or Coast and reset, inverse [3].
[21]	Speed up	For digital control of the up/down speed is desired (motor potentiometer). Activate this function by selecting either Freeze reference or Freeze output. When Speed up is activated for less than 400 msec., the resulting reference will be increased by 0.1%. If Speed up is activated for more than 400 msec., the resulting reference will ramp according to Ramp 1 in par. 3-41.
[22]	Slow	Same as Speed up [21].
[23]	Set-up select bit 0	Selects one of the four set-ups. Set par. 0-10 *Active Set-up* to Multi Set-up.
[24]	Set-up select bit 1	Same as Set-up select bit 0 [23]. (Default Digital input 32)
[32]	Pulse input	Select Pulse input when using a pulse sequence as either reference or feedback. Scaling is done in par. group 5-5*.
[34]	Ramp bit 0	Select which ramp to use. Logic "0" will select ramp 1 while logic "1" will select ramp 2.
[36]	Line failure inverse	Activates par. 14-10 *Line Failure*. Line failure inverse is active in the Logic "0" situation.
[52]	Run Permissive	The input terminal, for which the Run permissive has been programmed must be logic "1" before a start command can be accepted. Run permissive has a logic 'AND' function related to the terminal which is programmed for *START* [8], *Jog* [14] or *Freeze Output* [20], which means that in order to start running the motor, both conditions must be fulfilled. If Run Permissive is programmed on multiple terminals, Run permissive needs only be logic '1' on one of the terminals for the function to be carried out. The digital output signal for Run Request (*Start* [8], *Jog* [14] or *Freeze output* [20]) programmed in par. 5-3* Digital outputs, or par. 5-4* Relays, will not be affected by Run Permissive.
[53]	Hand start	A signal applied will put the adjustable frequency drive into hand mode as if button *Hand On* on the LCP has been pressed and a normal stop command will be overridden. If disconnecting the signal, the motor will stop. To make any other start commands valid, another digital input must be assigned to Auto-Start and a signal applied to this. The *Hand On* and *Auto On* buttons on the LCP has no impact. The *Off* button on the LCP will override *Hand Start* and *Auto-Start*. Press either the *Hand On* or *Auto On* button to make *Hand Start* and *Auto-Start* active again. If no signal on neither Hand Start nor Auto-Start, the motor will stop regardless of any normal Start command applied. If signal applied to both Hand Start and Auto-Start, the function will be Auto-Start. If pressing the *Off* button on the LCP, the motor will stop regardless of signals on *Hand Start* and *Auto-Start*.
[54]	Auto-start	A signal applied will put the adjustable frequency drive into auto mode as if the LCP button *Auto On* has been pressed. See also *Hand Start* [53]

[55]	DigiPot Increase	Uses the input as an INCREASE signal to the Digital Potentiometer function described in parameter group 3-9*
[56]	DigiPot Decrease	Uses the input as a DECREASE signal to the Digital Potentiometer function described in parameter group 3-9*
[57]	DigiPot Clear	Uses the input to CLEAR the Digital Potentiometer reference described in parameter group 3-9*
[60]	Counter A (up)	(Terminal 29 or 33 only) Input for increment counting in the SLC counter.
[61]	Counter A (down)	(Terminal 29 or 33 only) Input for decrement counting in the SLC counter.
[62]	Reset Counter A	Input for reset of counter A.
[63]	Counter B (up)	(Terminal 29 and 33 only) Input for increment counting in the SLC counter.
[64]	Counter B (down)	(Terminal 29 and 33 only) Input for decrement counting in the SLC counter.
[65]	Reset Counter B	Input for reset of counter B.
[66]	Sleep Mode	Forces adjustable frequency drive into sleep mode (see par. 22-4*, Sleep Mode). Reacts on the rising edge of signal applied!
[78]	Reset Preventive Maintenance Word	Resets all data in par. 16-96, Preventive Maintenance Word, to 0.

The below setting options are all related to the cascade controller. Wiring diagrams and settings for parameter, see group 25-** for more details.

[120]	Lead Pump Start	Starts/stops the lead pump (controlled by the adjustable frequency drive). A start requires that also a System Start signal has been applied, e.g., to one of the digital inputs set for *Start* [8]!
[121]	Lead Pump Alternation	Forces alternation of the lead pump in a cascade controller. *Lead Pump Alternation*, par. 25-50, must be set to either *At Command* [2] or *At Staging or At Command* [3]. *Alternation Event*, par. 25-51, can be set to any of the four options.
[130 - 138]	Pump1 Interlock - Pump9 Interlock	The function will depend on the setting in par. 25-06, Number of Pumps. If set to *No* [0], then Pump1 refers to the pump controlled by relay RELAY1 etc. If set to *Yes* [1], Pump1 refers to the pump controlled by the adjustable frequency drive only (without any of the built-in relays involved) and Pump2 to the pump controlled by the relay RELAY1. Variable speed pump (lead) cannot be interlocked in the basic cascade controller. See below table:

Setting in Par. 5-1*	Setting in Par. 25-06	
	[0] No	[1] Yes
[130] Pump1 Interlock	Controlled by RELAY1 (only if not lead pump)	Adjustable frequency drive controlled (cannot be interlocked)
[131] Pump2 Interlock	Controlled by RELAY2	Controlled by RELAY1
[132] Pump3 Interlock	Controlled by RELAY3	Controlled by RELAY2
[133] Pump4 Interlock	Controlled by RELAY4	Controlled by RELAY3
[134] Pump5 Interlock	Controlled by RELAY5	Controlled by RELAY4
[135] Pump6 Interlock	Controlled by RELAY6	Controlled by RELAY5
[136] Pump7 Interlock	Controlled by RELAY7	Controlled by RELAY6
[137] Pump8 Interlock	Controlled by RELAY8	Controlled by RELAY7
[138] Pump9 Interlock	Controlled by RELAY9	Controlled by RELAY8

5-13 Terminal 29 Digital Input

Option:		**Function:**
[0] *	No Operation	Same options and functions as par. 5-1* *Digital Inputs*.

5-14 Terminal 32 Digital Input

Option:		Function:
[0] *	No Operation	Same options and functions as par. 5-1* *Digital Inputs*, except for *Pulse input*.

5-15 Terminal 33 Digital Input

Option:		Function:
[0] *	No Operation	Same options and functions as par. 5-1* *Digital Inputs*.

5-30 Terminal 27 Digital Output

Option:		Function:
		Same options and functions as par. 5-3*.
[0] *	No operation	

5-40 Function Relay

Array [8]	(Relay 1 [0], Relay 2 [1], Relay 7 [6], Relay 8 [7], Relay 9 [8])

Select options to define the function of the relays.
The selection of each mechanical relay is realized in an array parameter.

[0] *	No Operation
[1]	Control Ready
[2]	Drive Ready
[3]	Drive Ready/Remote
[4]	Stand-by/No Warning
[5]	Running
[6]	Running/No Warning
[8]	Run on Ref./No Warning
[9]	Alarm
[10]	Alarm or Warning
[11]	At Torque Limit
[12]	Out of Current Range
[13]	Below Current, low
[14]	Above Current, high
[15]	Out of Speed Range
[16]	Below Speed, low
[17]	Above Speed, high
[18]	Out of Feedb. Range
[19]	Below Feedback, low
[20]	Above Feedback, high
[21]	Thermal Warning
[25]	Reverse
[26]	Bus OK
[27]	Torque Limit & Stop
[28]	Brake, No Warning
[29]	Brake Ready, No Fault

[30]	Brake Fault (IGBT)
[35]	External Interlock
[36]	Control Word Bit 11
[37]	Control Word Bit 12
[40]	Out of Ref. Range
[41]	Below Reference, low
[42]	Above Ref. high
[45]	Bus ctrl
[46]	Bus ctrl, 1 if timeout
[47]	Bus ctrl, 0 if timeout
[60]	Comparator 0
[61]	Comparator 1
[62]	Comparator 2
[63]	Comparator 3
[64]	Comparator 4
[65]	Comparator 5
[70]	Logic Rule 0
[71]	Logic Rule 1
[72]	Logic Rule 2
[73]	Logic Rule 3
[74]	Logic Rule 4
[75]	Logic Rule 5
[80]	SL Digital Output A
[81]	SL Digital Output B
[82]	SL Digital Output C
[83]	SL Digital Output D
[84]	SL Digital Output E
[85]	SL Digital Output F
[160]	No Alarm
[161]	Running Reverse
[165]	Local Ref. Active
[166]	Remote Ref. Active
[167]	Start Cmd. Active
[168]	Drive in Hand Mode
[169]	Drive in Auto Mode
[180]	Clock Fault
[181]	Prev. Maintenance
[190]	No-Flow
[191]	Dry Pump
[192]	End of Curve
[193]	Sleep Mode
[194]	Broken Belt
[195]	Bypass Valve Control

[199]	Pipe Filling
[211]	Cascade Pump1
[212]	Cascade Pump2
[213]	Cascade Pump3
[223]	Alarm, Trip Locked
[224]	Bypass Mode Active

5-53 Term. 29 High Ref./Feedb. Value

Range:		Function:
100.000*	[-999999.999 - 999999.999]	Enter the high reference value [RPM] for the motor shaft speed and the high feedback value, see also par. 5-58 *Term. 33 High Ref./Feedb. Value*.

6.3.8 6-** Analog In/Out

Parameter group for configuring the analog input and output.

6-00 Live Zero Timeout Time

Range:		Function:
10 s*	[1 - 99 s]	Enter the Live Zero Timeout time period. Live Zero Timeout Time is active for analog inputs, i.e., terminal 53 or terminal 54, used as reference or feedback sources. If the reference signal value associated with the selected current input falls below 50% of the value set in par. 6-10 *Terminal 53 Low Voltage*, par. 6-12 *Terminal 53 Low Current*, par. 6-20 *Terminal 54 Low Voltage* or par. 6-22 *Terminal 54 Low Current* for a time period longer than the time set in par. 6-00 *Live Zero Timeout Time*, the function selected in par. 6-01 *Live Zero Timeout Function* will be activated.

6-01 Live Zero Timeout Function

Option:		Function:
		Select the timeout function. The function set in par. 6-01 *Live Zero Timeout Function* will be activated if the input signal on terminal 53 or 54 is below 50% of the value in par. 6-10 *Terminal 53 Low Voltage*, par. 6-12 *Terminal 53 Low Current*, par. 6-20 *Terminal 54 Low Voltage* or par. 6-22 *Terminal 54 Low Current* for a time period defined in par. 6-00 *Live Zero Timeout Time*. If several timeouts occur simultaneously, the adjustable frequency drive prioritizes the timeout functions as follows: 1. Par. 6-01 *Live Zero Timeout Function* 2. Par. 8-04 *Control Word Timeout Function* The output frequency of the adjustable frequency drive can be: • [1] frozen at the present value • [2] overruled to stop • [3] overruled to jog speed • [4] overruled to max. speed • [5] overruled to stop with subsequent trip
[0] *	Off	
[1]	Freeze output	
[2]	Stop	
[3]	Jogging	
[4]	Max. speed	
[5]	Stop and trip	

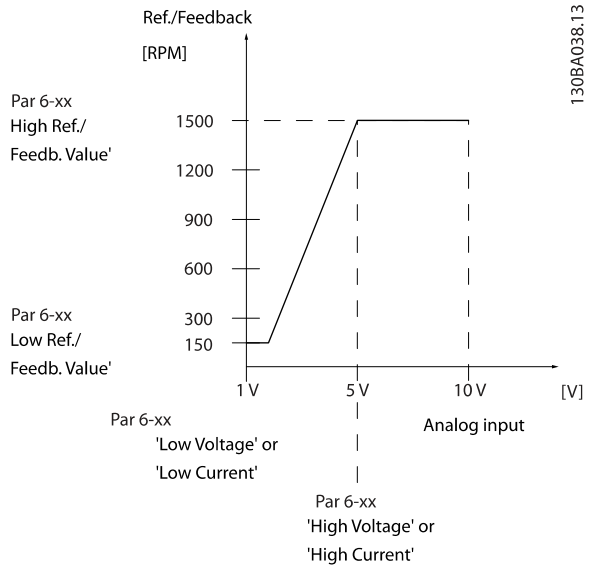

6

6-10 Terminal 53 Low Voltage

Range:		Function:
0.07 V*	[Application dependant]	Enter the low voltage value. This analog input scaling value should correspond to the low reference/feedback value set in par. 6-14 *Terminal 53 Low Ref./Feedb. Value*.

6-11 Terminal 53 High Voltage

Range:		Function:
10.00 V*	[Application dependant]	Enter the high voltage value. This analog input scaling value should correspond to the high reference/feedback value set in par. 6-15 *Terminal 53 High Ref./Feedb. Value*.

6-14 Terminal 53 Low Ref./Feedb. Value

Range:		Function:
0.000*	[-999999.999 - 999999.999]	Enter the analog input scaling value that corresponds to the low voltage/low current set in par. 6-10 *Terminal 53 Low Voltage* and par. 6-12 *Terminal 53 Low Current*.

6-15 Terminal 53 High Ref./Feedb. Value

Range:		Function:
Application dependent*	[-999999.999 - 999999.999]	

6-20 Terminal 54 Low Voltage

Range:		Function:
0.07 V*	[Application dependant]	Enter the low voltage value. This analog input scaling value should correspond to the low reference/feedback value, set in par. 6-24 *Terminal 54 Low Ref./Feedb. Value*.

6-21 Terminal 54 High Voltage

Range:		Function:
10.00 V*	[Application dependant]	Enter the high voltage value. This analog input scaling value should correspond to the high reference/feedback value set in par. 6-25 *Terminal 54 High Ref./Feedb. Value*.

6-24 Terminal 54 Low Ref./Feedb. Value

Range:		Function:
0.000*	[-999999.999 - 999999.999]	Enter the analog input scaling value that corresponds to the low voltage/low current value set in par. 6-20 *Terminal 54 Low Voltage* and par. 6-22 *Terminal 54 Low Current*.

6-25 Terminal 54 High Ref./Feedb. Value

Range:		Function:
100.000*	[-999999.999 - 999999.999]	Enter the analog input scaling value that corresponds to the high voltage/high current value set in par. 6-21 *Terminal 54 High Voltage* and par. 6-23 *Terminal 54 High Current*.

6-50 Terminal 42 Output

Option:		Function:
		Select the function of Terminal 42 as an analog current output. A motor current of 20 mA corresponds to I_{max}.
[0] *	No operation	
[100]	Output freq. 0-100	0–100 Hz, (0–20 mA)
[101]	Reference Min-Max	Minimum reference - Maximum reference, (0–20 mA)
[102]	Feedback +-200%	-200% to +200% of par. 20-14 *Maximum Reference/Feedb.*, (0–20 mA)
[103]	Motor cur. 0-Imax	0 - Inverter Max. Current (par. 16-37 *Inv. Max. Current*), (0–20 mA)
[104]	Torque 0-Tlim	0 - Torque limit (par. 4-16 *Torque Limit Motor Mode*), (0–20 mA)
[105]	Torque 0-Tnom	0 - Motor rated torque, (0–20 mA)
[106]	Power 0-Pnom	0 - Motor rated power, (0–20 mA)
[107] *	Speed 0-HighLim	0 - Speed High Limit (par. 4-13 *Motor Speed High Limit [RPM]* and par. 4-14 *Motor Speed High Limit [Hz]*), (0–20 mA)
[113]	Ext. Closed-loop 1	0–100%, (0–20 mA)
[114]	Ext. Closed-loop 2	0–100%, (0–20 mA)
[115]	Ext. Closed-loop 3	0–100%, (0–20 mA)
[130]	Out fr 0-100 4-20	0–100 Hz
[131]	Reference 4-20mA	Minimum Reference - Maximum Reference
[132]	Feedback 4-20mA	-200% to +200% of par. 20-14 *Maximum Reference/Feedb.*
[133]	Motor cur. 4-20mA	0 - Inverter Max. Current (par. 16-37 *Inv. Max. Current*)
[134]	Torq.0-lim 4-20mA	0 - Torque limit (par. 4-16 *Torque Limit Motor Mode*)
[135]	Torq.0-nom 4-20mA	0 - Motor rated torque
[136]	Power 4-20mA	0 - Motor rated power
[137]	Speed 4-20mA	0 - Speed High Limit (4-13 and 4-14)
[139]	Bus ctrl.	0–100%, (0–20 mA)
[140]	Bus ctrl. 4-20 mA	0 - 100%
[141]	Bus ctrl t.o.	0–100%, (0–20 mA)
[142]	Bus ctrl 4-20mA t.o.	0 - 100%

[143]	Ext. CL 1 4-20 mA	0 - 100%
[144]	Ext. CL 2 4-20 mA	0 - 100%
[145]	Ext. CL 3 4-20 mA	0 - 100%

NOTE!
Values for setting the minimum reference are found in open-loop par. 3-02 *Minimum Reference* and for closed-loop par. 20-13 *Minimum Reference/ Feedb.* - values for maximum reference for open-loop are found in par. 3-03 *Maximum Reference* and for closed-loop par. 20-14 *Maximum Reference/ Feedb.*.

6-51 Terminal 42 Output Min Scale

Range:	Function:
0.00 %* [0.00 - 200.00 %]	

6-52 Terminal 42 Output Max Scale

Range:	Function:
100.00 %* [0.00 - 200.00 %]	

EXAMPLE 1:
Variable value= OUTPUT FREQUENCY, range = 0–100 Hz
Range needed for output = 0–50 Hz
Output signal 0 or 4 mA is needed at 0 Hz (0% of range) - set par. 6-51 *Terminal 42 Output Min Scale* to 0%
Output signal 20 mA is needed at 50 Hz (50% of range) - set par. 6-52 *Terminal 42 Output Max Scale* to 50%

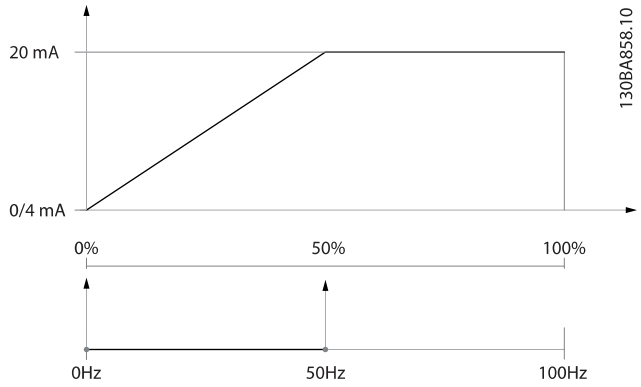

EXAMPLE 2:
Variable= FEEDBACK, range= -200% to +200%
Range needed for output= 0–100%
Output signal 0 or 4 mA is needed at 0% (50% of range) - set par. 6-51 *Terminal 42 Output Min Scale* to 50%
Output signal 20 mA is needed at 100% (75% of range) - set par. 6-52 *Terminal 42 Output Max Scale* to 75%

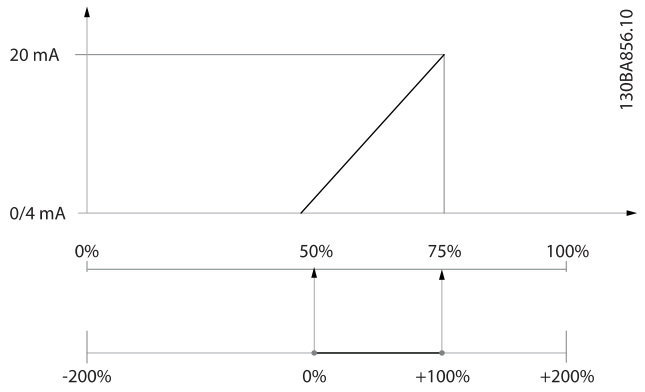

EXAMPLE 3:

Variable value= REFERENCE, range= Min ref - Max ref

Range needed for output= Min ref (0%) - Max ref (100%), 0–10 mA

Output signal 0 or 4 mA is needed at Min ref - set par. 6-51 *Terminal 42 Output Min Scale* to 0%

Output signal 10 mA is needed at Max ref (100% of range) - set par. 6-52 *Terminal 42 Output Max Scale* to 200%

(20 mA / 10 mA x 100%=200%).

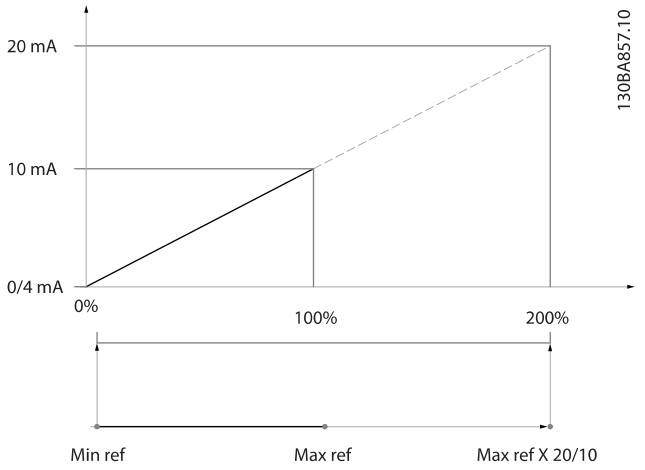

6.3.9 Drive Closed-loop, 20-**

This parameter group is used for configuring the closed-loop PID controller, which controls the output frequency of the adjustable frequency drive.

20-12 Reference/Feedback Unit

Option:		Function:
[0]	None	
[1] *	%	
[5]	PPM	
[10]	1/min	
[11]	RPM	
[12]	Pulse/s	
[20]	l/s	
[21]	l/min	
[22]	l/h	
[23]	m^3/s	
[24]	m^3/min	
[25]	m^3/h	
[30]	kg/s	
[31]	kg/min	
[32]	kg/h	
[33]	t/min	
[34]	t/h	
[40]	m/s	
[41]	m/min	
[45]	m	
[60]	°C	
[70]	mbar	
[71]	bar	
[72]	Pa	
[73]	kPa	
[74]	m WG	
[75]	mm Hg	
[80]	kW	
[120]	GPM	
[121]	gal/s	
[122]	gal/min	
[123]	gal/h	
[124]	CFM	
[125]	ft^3/s	
[126]	ft^3/min	
[127]	ft^3/h	
[130]	lb/s	
[131]	lb/min	

[132]	lb/h	
[140]	ft/s	
[141]	ft/min	
[145]	ft	
[160]	°F	
[170]	psi	
[171]	lb/in^2	
[172]	in WG	
[173]	ft WG	
[174]	in Hg	
[180]	HP	This parameter determines the unit that is used for the setpoint reference and feedback that the PID controller will use for controlling the output frequency of the adjustable frequency drive.

20-21 Setpoint 1

Range:		Function:
0.000 ProcessCtrlUnit*	[-999999.999 - 999999.999 ProcessCtrlUnit]	Setpoint 1 is used in closed-loop mode to enter a setpoint reference that is used by the adjustable frequency drive's PID controller. See the description of par. 20-20 *Feedback Function*.

NOTE!
Setpoint reference entered here is added to any other references that are enabled (see par. group 3-1*).

20-81 PID Normal/Inverse Control

Option:		Function:
[0] *	Normal	
[1]	Inverse	*Normal* [0] causes the adjustable frequency drive's output frequency to decrease when the feedback is greater than the setpoint reference. This is common for pressure-controlled supply fan and pump applications. *Inverse* [1] causes the adjustable frequency drive's output frequency to increase when the feedback is greater than the setpoint reference.

20-82 PID Start Speed [RPM]

Range:		Function:
Application dependent*	[Application dependant]	When the adjustable frequency drive is first started, it initially ramps up to this output speed in open-loop mode, following the active ramp-up time. When the output speed programmed here is reached, the adjustable frequency drive will automatically switch to closed-loop mode and the PID controller will begin to function. This is useful in applications in which the driven load must first quickly accelerate to a minimum speed when it is started.

NOTE!
This parameter will only be visible if par. 0-02 *Motor Speed Unit* is set to [0], RPM.

20-93 PID Proportional Gain	
Range:	**Function:**
0.50* [0.00 - 10.00]	

If (Error x Gain) jumps with a value equal to what is set in par. 20-14 *Maximum Reference/Feedb.* the PID controller will try to change the output speed equal to what is set in par. 4-13 *Motor Speed High Limit [RPM]* / par. 4-14 *Motor Speed High Limit [Hz]* but in practice of course limited by this setting. The proportional band (error causing output to change from 0–100%) can be calculated by means of the formula:

$$\left(\frac{1}{Proportional\ Gain}\right) \times (Max\ \ Reference)$$

NOTE!
Always set the desired for par. 20-14 *Maximum Reference/Feedb.* before setting the values for the PID controller in par. group 20-9*.

20-94 PID Integral Time	
Range:	**Function:**
20.00 s* [0.01 - 10000.00 s]	Over time, the integrator accumulates a contribution to the output from the PID controller as long as there is a deviation between the reference/setpoint and feedback signals. The contribution is proportional to the size of the deviation. This ensures that the deviation (error) approaches zero. Quick response on any deviation is obtained when the integral time is set to a low value. Setting it too low, however, may cause the control to become unstable. The value set is the time needed for the integrator to add the same contribution as the proportional part for a certain deviation. If the value is set to 10,000, the controller will act as a pure proportional controller with a P-band based on the value set in par. 20-93 *PID Proportional Gain*. When no deviation is present, the output from the proportional controller will be 0.

6

6.3.10 22-** Miscellaneous

This group contains parameters used for monitoring water/wastewater applications.

22-20 Low Power Auto Set-up		
Start of auto set-up of power data for No-Flow Power tuning.		
Option:		**Function:**
[0] *	OFF	
[1]	Enabled	When set for *Enabled*, an auto set-up sequence is activated, automatically setting speed to approx. 50% and 85% of rated motor speed (par. 4-13 *Motor Speed High Limit [RPM]*, par. 4-14 *Motor Speed High Limit [Hz]*). At those two speeds, the power consumption is automatically measured and stored. Before enabling Auto Set-up: 1. Close valve(s) in order to create a no-flow condition 2. The adjustable frequency drive must be set for open-loop (par. 1-00 *Configuration Mode*). Note that it is important also to set par. 1-03 *Torque Characteristics*.

NOTE!
Auto set-up must be done when the system has reached normal operating temperature!

NOTE!
It is important that the par. 4-13 *Motor Speed High Limit [RPM]* or par. 4-14 *Motor Speed High Limit [Hz]* is set to the max. operational speed of the motor!
It is important to do the auto set-up before configuring the integrated PI controller as settings will be reset when changing from closed to open-loop in par. 1-00 *Configuration Mode*.

NOTE!
Carry out the tuning with the same settings in par. 1-03 *Torque Characteristics*, as for operation after the tuning.

22-21 Low Power Detection

Option:		Function:
[0] *	Disabled	
[1]	Enabled	If selecting Enabled, the low power detection commissioning must be carried out in order to set the parameters in group 22-3* for proper operation!

22-22 Low Speed Detection

Option:		Function:
[0] *	Disabled	
[1]	Enabled	Select Enabled for detecting when the motor operates with a speed as set in par. 4-11 *Motor Speed Low Limit [RPM]* or par. 4-12 *Motor Speed Low Limit [Hz]*.

22-23 No-Flow Function

Common actions for Low Power Detection and Low Speed Detection (Individual selections not possible).

Option:		Function:
[0] *	OFF	
[1]	Sleep Mode	The drive will enter sleep mode and stop when a No Flow condition is detected. See parameter group 22-4* for programming options for sleep mode.
[2]	Warning	The drive will continue to run, but activate a No-Flow Warning [W92]. A drive digital output or a serial communication bus can communicate a warning to other equipment.
[3]	Alarm	The drive will stop running and activate a No-Flow Alarm [A 92]. A drive digital output or a serial communication bus can communicate an alarm to other equipment.

NOTE!
Do not set par. 14-20 *Reset Mode* to [13] Infinite auto reset when par. 22-23 *No-Flow Function*is set to [3] Alarm. Doing so will cause the drive to continuously cycle between running and stopping when a No Flow condition is detected.

NOTE!
If the drive is equipped with a constant speed bypass with an automatic bypass function that starts the bypass if the drive experiences a persistent alarm condition, be sure to disable the bypass' automatic bypass function, if [3] Alarm is selected as the No-Flow Function.

22-24 No-Flow Delay

Range:		Function:
10 s*	[1 - 600 s]	Set the time. Low Power/Low Speed must remain detected to activate signal for actions. If detection disappears before the timer runs out, the timer will be reset.

22-26 Dry Pump Function

Select desired action for dry pump operation.

Option:		Function:
[0] *	OFF	
[1]	Warning	The drive will continue to run, but activate a dry pump warning [W93]. A drive digital output or a serial communication bus can communicate a warning to other equipment.
[2]	Alarm	The drive will stop running and activate a dry pump alarm [A93]. A drive digital output or a serial communication bus can communicate an alarm to other equipment.
[3]	Man. Reset Alarm	The drive will stop running and activate a dry pump alarm [A93]. A drive digital output or a serial communication bus can communicate an alarm to other equipment.

6

NOTE!
Low Power Detection must be Enabled (par. 22-21 *Low Power Detection*) and commissioned (using either parameter group 22-3*, *No Flow Power Tuning*, or par. 22-20 *Low Power Auto Set-up*) in order to use Dry Pump Detection.

NOTE!
Do not set par. 14-20 *Reset Mode*, to [13] Infinite auto reset, when par. 22-26 *Dry Pump Function* is set to [2] Alarm. Doing so will cause the drive to continuously cycle between running and stopping when a dry pump condition is detected.

NOTE!
If the drive is equipped with a constant speed bypass with an automatic bypass function that starts the bypass if the drive experiences a persistent alarm condition, be sure to disable the bypass' automatic bypass function, if [2] Alarm or [3] Man. Reset Alarm is selected as the dry pump function.

22-27 Dry Pump Delay

Range:		Function:
10 s*	[0 - 600 s]	Defines for how long the Dry Pump condition must be active before activating Warning or Alarm

22-30 No-Flow Power

Range:		Function:
0.00 kW*	[0.00 - 0.00 kW]	Readout of calculated no-flow power at actual speed. If power drops to the display value, the adjustable frequency drive will consider the condition as a no-flow situation.

22-31 Power Correction Factor

Range:		Function:
100 %*	[1 - 400 %]	Make corrections to the calculated power at par. 22-30 *No-Flow Power*. If No Flow is detected when it should not be detected, the setting should be decreased. However, if No Flow is not detected when it should be detected, the setting should be increased to above 100%.

22-32 Low Speed [RPM]

Range:		Function:
Application dependent*	[Application dependant]	To be used if par. 0-02 *Motor Speed Unit* has been set for RPM (parameter not visible if Hz selected). Set used speed to the 50% level. This function is used for storing values needed to tune No-flow Detection.

22-33 Low Speed [Hz]

Range:		Function:
Application dependent*	[Application dependant]	To be used if par. 0-02 *Motor Speed Unit* has been set for Hz (parameter not visible if RPM selected). Set used speed to the 50% level. The function is used for storing values needed to tune No-flow Detection.

22-34 Low Speed Power [kW]

Range:		Function:
Application dependent*	[Application dependant]	To be used if par. 0-03 *Regional Settings* has been set for International (parameter not visible if North America selected). Set power consumption to 50% speed level. This function is used for storing values needed to tune No-flow Detection.

22-35 Low Speed Power [HP]

Range:		Function:
Application dependent*	[Application dependant]	To be used if par. 0-03 *Regional Settings* has been set for North America (parameter not visible if International selected). Set power consumption to 50% speed level. This function is used for storing values needed to tune No-flow Detection.

22-36 High Speed [RPM]

Range:		Function:
Application dependent*	[Application dependant]	To be used if par. 0-02 *Motor Speed Unit* has been set for RPM (parameter not visible if Hz selected). Set used speed for the 85% level. The function is used for storing values needed to tune No-flow Detection.

22-37 High Speed [Hz]

Range:		Function:
Application dependent*	[Application dependant]	To be used if par. 0-02 *Motor Speed Unit* has been set for Hz (parameter not visible if RPM selected). Set used speed for the 85% level. The function is used for storing values needed to tune No-flow Detection.

22-38 High Speed Power [kW]

Range:		Function:
Application dependent*	[Application dependant]	To be used if par. 0-03 *Regional Settings* has been set for International (parameter not visible if North America selected). Set power consumption to 85% speed level. This function is used for storing values needed to tune No-flow Detection.

22-39 High Speed Power [HP]

Range:		Function:
Application dependent*	[Application dependant]	To be used if par. 0-03 *Regional Settings* has been set for North America (parameter not visible if International selected). Set power consumption to 85% speed level. This function is used for storing values needed to tune No-flow Detection.

22-40 Minimum Run Time

Range:		Function:
10 s*	[0 - 600 s]	Set the desired minimum running time for the motor after a start command (digital input or bus) before entering sleep mode.

22-41 Minimum Sleep Time

Range:		Function:
10 s*	[0 - 600 s]	Set the desired minimum time for staying in sleep mode. This will override any wake-up conditions.

6

22-42 Wake-up Speed [RPM]

Range:		Function:
Application dependent*	[Application dependant]	To be used if par. 0-02 *Motor Speed Unit* has been set for RPM (parameter not visible if Hz selected). Only to be used if par. 1-00 *Configuration Mode* is set for open-loop and speed reference is applied by an external controller. Set the reference speed at which sleep mode should be canceled.

22-43 Wake-up Speed [Hz]

Range:		Function:
Application dependent*	[Application dependant]	To be used if par. 0-02 *Motor Speed Unit* has been set for Hz (parameter not visible if RPM selected). Only to be used if par. 1-00 *Configuration Mode* is set for open-loop and speed reference is applied by an external controller controlling the pressure. Set the reference speed at which sleep mode should be canceled.

22-44 Wake-up Ref./FB Difference

Range:		Function:
10%*	[0-100%]	Only to be used if par. 1-00, *Configuration Mode*, is set for closed-loop and the integrated PI controller is used for controlling the pressure. Set the pressure drop allowed as a percentage of the setpoint for the pressure (Pset) before canceling sleep mode.

NOTE!
If used in application where the integrated PI controller is set for inverse control in par. 20-71, *PID, Normal/Inverse Control*, the value set in par. 22-44 will automatically be added.

22-45 Setpoint Boost

Range:		Function:
0 %*	[-100 - 100 %]	Only to be used if par. 1-00 *Configuration Mode*, is set for closed-loop and the integrated PI controller is used. For example, in systems with constant pressure control, it is advantageous to increase the system pressure before the motor is stopped. This will extend the time during which the motor is stopped and help to avoid frequent start/stop. Set the desired overpressure/temperature as a percentage of the setpoint for the pressure (Pset)/ temperature before entering sleep mode. If set at 5%, the boost pressure will be Pset*1.05. The negative values can be used, for example, for cooling tower control, where a negative change is needed.

22-46 Maximum Boost Time

Range:		Function:
60 s*	[0 - 600 s]	Only to be used if par. 1-00 *Configuration Mode* is set for closed-loop and the integrated PI controller is used for controlling the pressure. Set the maximum time for which boost mode will be allowed. If the set time is exceeded, sleep mode will be entered and will not wait for the set boost pressure to be reached.

6

22-50 End of Curve Function

Option:		Function:
[0] *	OFF	End of Curve monitoring not active.
[1]	Warning	The drive will continue to run, but activate a End of Curve warning [W94]. A drive digital output or a serial communication bus can communicate a warning to other equipment.
[2]	Alarm	The drive will stop running and activate a End of Curve alarm [A 94]. A drive digital output or a serial communication bus can communicate an alarm to other equipment.
[3]	Man. Reset Alarm	The drive will stop running and activate a End of Curve alarm [A 94]. A drive digital output or a serial communication bus can communicate an alarm to other equipment.

NOTE!
Automatic restart will reset the alarm and start the system again.

NOTE!
Do not set par. 14-20 *Reset Mode*, to [13] Infinite auto reset when par. 22-50 *End of Curve Function* is set to [2] Alarm. Doing so will cause the drive to continuously cycle between running and stopping when a End of Curve condition is detected.

NOTE!
If the drive is equipped with a constant speed bypass with an automatic bypass function that starts the bypass if the drive experiences a persistent alarm condition, be sure to disable the bypass's automatic bypass function, if [2] Alarm or [3] Man. Reset Alarm is selected as the End of Curve Function.

22-51 End of Curve Delay

Range:		Function:
10 s*	[0 - 600 s]	When an end of curve condition is detected, a timer is activated. When the time set in this parameter expires and the End of Curve condition has been steady in the entire period, the function set in par. 22-50 *End of Curve Function* will be activated. If the condition disappears before the timer expires, the timer will be reset.

22-80 Flow Compensation

Option:		Function:
[0] *	Disabled	[0] *Disabled*: Setpoint compensation not active.
[1]	Enabled	[1] *Enabled*: Setpoint compensation is active. Enabling this parameter allows the Flow Compensated Setpoint operation.

22-81 Square-linear Curve Approximation

Range:		Function:
100 %*	[0 - 100 %]	**Example 1:** Adjustment of this parameter allows the shape of the control curve to be adjusted. 0 = Linear 100% = Ideal shape (theoretical).

6

NOTE!
Please note: Not visible when running in cascade.

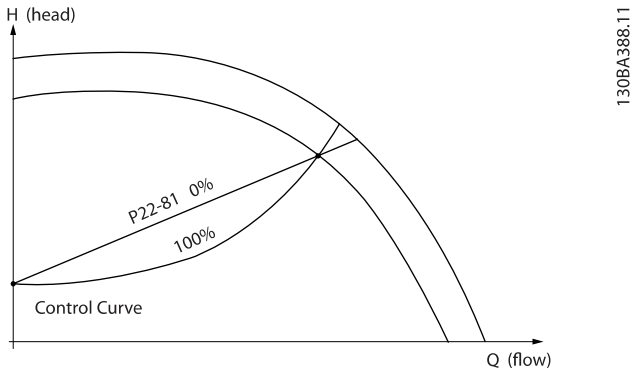

22-82 Work Point Calculation

Option:	Function:
	Example 1: Speed at System Design Working Point is known:

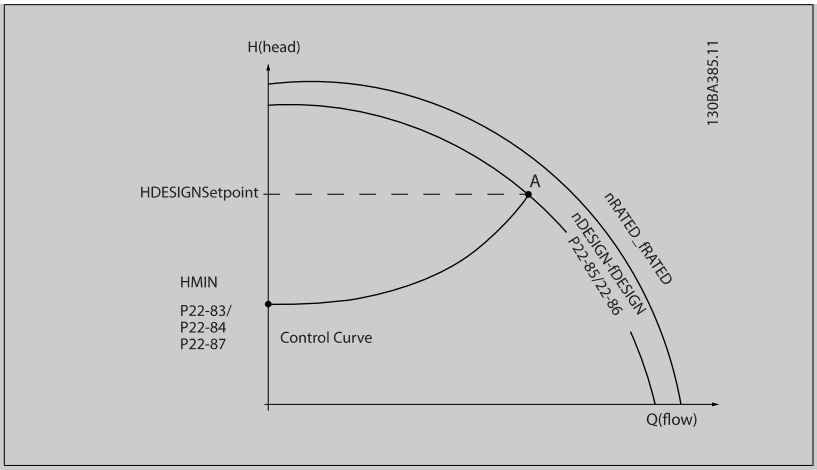

From the data sheet showing characteristics for the specific equipment at different speeds, simply reading across from the H_{DESIGN} point and the Q_{DESIGN} point allows us to find point A, which is the system design working point. The pump characteristics at this point should be identified and the associated speed programmed. Closing the valves and adjusting the speed until H_{MIN} has been achieved allows the speed at the no flow point to be identified.
Adjustment of par. 22-81 *Square-linear Curve Approximation* then allows the shape of the control curve to be adjusted infinitely.

Example 2:
Speed at System Design Working Point is not known: Where the Speed at System Design Working Point is unknown, another reference point on the control curve needs to be determined by means of the data sheet. By looking at the curve for the rated speed and plotting the design pressure (H_{DESIGN}, Point C), the flow at that pressure Q_{RATED} can be determined. Similarly, by plotting the design flow (Q_{DESIGN}, Point D), the pressure H_D at that flow can be determined. Knowing these two points on the pump curve, along with H_{MIN} described above, allows the adjustable frequency drive to calculate the reference point B and thus to plot the control curve that will also include the system design working point A.

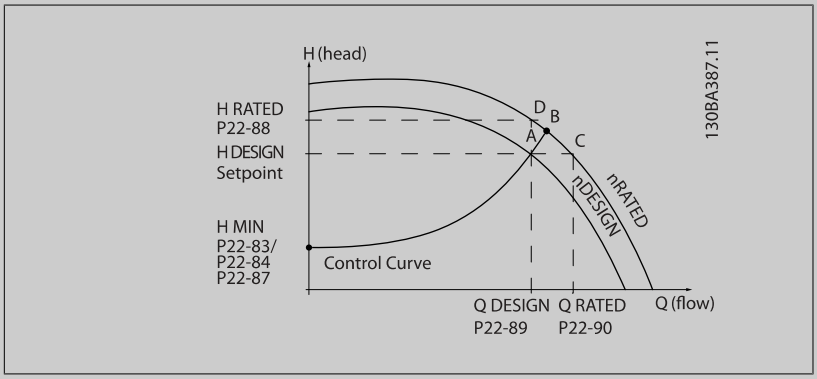

[0] *	Disabled	*Disabled [0]*: Work Point Calculation not active. To be used if speed at design point is known (see table above).
[1]	Enabled	*Enabled [1]*: Work Point Calculation is active. Enabling this parameter allows the calculation of the unknown System Design Working Point at 50/60 Hz speed, from the input data set in par. 22-83 *Speed at No-Flow [RPM]* par. 22-84 *Speed at No-Flow [Hz]*, par. 22-87 *Pressure at No-Flow Speed*, par. 22-88 *Pressure at Rated Speed*, par. 22-89 *Flow at Design Point* and par. 22-90 *Flow at Rated Speed*.

22-84 Speed at No-Flow [Hz]

Range:		Function:
Application dependent*	[Application dependant]	Resolution 0.033 Hz. The speed of the motor at which flow has effectively stopped and minimum pressure H_{MIN} is achieved should be entered here in Hz. Alternatively, the speed in RPM can be entered in par. 22-83 *Speed at No-Flow [RPM]*. If it has been decided to use Hz in par. 0-02 *Motor Speed Unit*, then par. 22-86 *Speed at Design Point [Hz]* should also be used. Closing the valves and reducing the speed until minimum pressure H_{MIN} is achieved will determine this value.

22-85 Speed at Design Point [RPM]

Range:		Function:
Application dependent*	[Application dependant]	Resolution 1 RPM. Only visible when par. 22-82 *Work Point Calculation* is set to *Disable*. The speed of the motor at which the system design working point is achieved should be entered here in RPM. Alternatively, the speed in Hz can be entered in par. 22-86 *Speed at Design Point [Hz]*. If it has been decided to use RPM in par. 0-02 *Motor Speed Unit*, then par. 22-83 *Speed at No-Flow [RPM]* should also be used.

6

22-86 Speed at Design Point [Hz]

Range:		Function:
Application dependent*	[Application dependant]	Resolution 0.033 Hz. Only visible when par. 22-82 *Work Point Calculation* is set to *Disable*. The speed of the motor at which the system design working point is achieved should be entered here in Hz. Alternatively, the speed in RPM can be entered in par. 22-85 *Speed at Design Point [RPM]*. If it has been decided to use Hz in par. 0-02 *Motor Speed Unit*, then par. 22-83 *Speed at No-Flow [RPM]* should also be used.

22-87 Pressure at No-Flow Speed

Range:		Function:
0.000*	[Application dependant]	Enter the pressure H_{MIN} corresponding to Speed at No Flow in Reference/Feedback Units.

Please also see par. 22-82 *Work Point Calculation* point D.

22-88 Pressure at Rated Speed

Range:		Function:
999999.999 *	[Application dependant]	Enter the value corresponding to the Pressure at Rated Speed, in Reference/Feedback Units. This value can be defined using the pump datasheet.

22-83 Speed at No-Flow [RPM]

Range:		Function:
Application dependent*	[Application dependant]	Resolution 1 RPM. The speed of the motor at which the flow is zero and the minimum pressure H_{MIN} is achieved should be entered here in RPM. Alternatively, the speed in Hz can be entered in par. 22-84 *Speed at No-Flow [Hz]*. If it has been decided to use RPM in par. 0-02 *Motor Speed Unit*, then par. 22-85 *Speed at Design Point [RPM]* should also be used. Closing the valves and reducing the speed until minimum pressure H_{MIN} is achieved will determine this value.

Please also see par. 22-82 *Work Point Calculation* point C.

22-90 Flow at Rated Speed		
Range:		**Function:**
0.000*	[0.000 - 999999.999]	Enter the value corresponding to Flow at Rated Speed. This value can be defined using the pump datasheet.

6.3.11 23-0* Timed Actions

Use *Timed Actions* for actions needing to be performed on a daily or weekly basis, e.g., different references for working hours / non-working hours. Up to 10 Timed Actions can be programmed in the adjustable frequency drive. The Timed Action number is selected from the list when entering parameter group 23-0* from the LCP. Par. 23-00 *ON Time* – par. 23-04 *Occurrence* then refer to the selected Timed Action number. Each timed action is divided into an ON time and an OFF time, in which two different actions may be performed.

The actions programmed in timed actions are merged with corresponding actions from digital inputs, control work via bus and Smart Logic ControllerLogic Controller, according to merge rules set up in 8-5*O-5#, digital/bus.

6

NOTE!
The clock (parameter group 0-7*) must be correctly programmed for timed actions to function correctly.

NOTE!
When mounting an Analog I/O MCB 109 option card, a battery backup of the date and time is included.

NOTE!
The PC-based configuration tool MCT 10DCT 10 includes a special guide for easy programming of timed actions.

23-00 ON Time		
Array [10]		
Range:		**Function:**
Application dependent*	[Application dependant]	Sets the ON time for the timed action. **NOTE!** The adjustable frequency drive has no backup of the clock function and the set date/time will reset to default (2000-01-01 00:00) after a power-down unless a real time clock module with backup is installed. In par. 0-79 *Clock Fault*, it is possible to program for a warning in case the clock has not been set properly, e.g., after a power-down.

23-01 ON Action

Arra [10]

Option:		Function:
		Select the action during ON Time. See par. 13-52 *SL Controller Action* for descriptions of the options.
[0] *	DISABLED	
[1]	No action	
[2]	Select set-up 1	
[3]	Select set-up 2	
[4]	Select set-up 3	
[5]	Select set-up 4	
[10]	Select preset ref 0	
[11]	Select preset ref 1	
[12]	Select preset ref 2	
[13]	Select preset ref 3	
[14]	Select preset ref 4	
[15]	Select preset ref 5	
[16]	Select preset ref 6	
[17]	Select preset ref 7	
[18]	Select ramp 1	
[19]	Select ramp 2	
[22]	Run	
[23]	Run reverse	
[24]	Stop	
[26]	Dcstop	
[27]	Coast	
[32]	Set digital out A low	
[33]	Set digital out B low	
[34]	Set digital out C low	
[35]	Set digital out D low	
[36]	Set digital out E low	
[37]	Set digital out F low	
[38]	Set digital out A high	
[39]	Set digital out B high	
[40]	Set digital out C high	
[41]	Set digital out D high	
[42]	Set digital out E high	
[43]	Set digital out F high	
[60]	Reset Counter A	
[61]	Reset Counter B	
[80]	Sleep Mode	

NOTE!
For choices [32] - [43], see also par. group 5-3*E-##, *Digital Outputs* and 5-4*, *Relays*.

23-02 OFF Time

Array [10]

Range:	Function:
Application dependent* [Application dependant]	Sets the OFF time for the timed action.

NOTE!
The adjustable frequency drive has no backup of the clock function and the set date/time will reset to default (2000-01-01 00:00) after a power-down unless a real time clock module with backup is installed. In par. 0-79 *Clock Fault*, it is possible to program for a warning in case the clock has not been set properly, e.g., after a power-down.

23-03 OFF Action

Array [10]

Option:		Function:
		Select the action during OFF Time. See par. 13-52 *SL Controller Action* for descriptions of the options.
[0] *	DISABLED	
[1] *	No action	
[2]	Select set-up 1	
[3]	Select set-up 2	
[4]	Select set-up 3	
[5]	Select set-up 4	
[10]	Select preset ref 0	
[11]	Select preset ref 1	
[12]	Select preset ref 2	
[13]	Select preset ref 3	
[14]	Select preset ref 4	
[15]	Select preset ref 5	
[16]	Select preset ref 6	
[17]	Select preset ref 7	
[18]	Select ramp 1	
[19]	Select ramp 2	
[22]	Run	
[23]	Run reverse	
[24]	Stop	
[26]	Dcstop	
[27]	Coast	
[32]	Set digital out A low	
[33]	Set digital out B low	
[34]	Set digital out C low	
[35]	Set digital out D low	
[36]	Set digital out E low	
[37]	Set digital out F low	
[38]	Set digital out A high	

[39]	Set digital out B high
[40]	Set digital out C high
[41]	Set digital out D high
[42]	Set digital out E high
[43]	Set digital out F high
[60]	Reset Counter A
[61]	Reset Counter B
[80]	Sleep Mode

23-04 Occurrence

Array [10]

Option:		Function:
		Select the day(s) to which the timed action applies. Specify working/non-working days in par. 0-81 *Working Days*, par. 0-82 *Additional Working Days* and par. 0-83 *Additional Non-Working Days*.
[0] *	All days	
[1]	Working days	
[2]	Non-working days	
[3]	Monday	
[4]	Tuesday	
[5]	Wednesday	
[6]	Thursday	
[7]	Friday	
[8]	Saturday	
[9]	Sunday	

6.3.12 Water Application Functions, 29-**

The group contains parameters used for monitoring water/wastewater applications.

29-00 Pipe Fill Enable

Option:		Function:
[0] *	Disabled	Select Enabled to fill pipes at a user-specified rate.
[1]	Enabled	Select Enabled to fill pipes with a user specified rate.

29-01 Pipe Fill Speed [RPM]

Range:		Function:
Speed Low Limit*	[Speed Low Limit - Speed High Limit]	Set the filling speed for filling horizontal pipe systems. The speed can be selected in Hz or RPM depending on the choices made in par. 4-11 / par. 4-13 (RPM) or in par. 4-12 / par. 4-14 (Hz).

29-02 Pipe Fill Speed [Hz]

Range:		Function:
Motor Speed Low Limit*	[Speed Low Limit - Speed High Limit]	Set the filling speed for filling horizontal pipe systems. The speed can be selected in Hz or RPM depending on the choices made in par. 4-11 / par. 4-13 (RPM) or in par. 4-12 / par. 4-14 (Hz).

29-03 Pipe Fill Time

Range:		Function:
0 s*	[0–3600 s]	Set the specified time for pipe filling of horizontal pipe systems.

29-04 Pipe Fill Rate

Range:		Function:
0.001 units/s*	[0.001–999999.999 units/s]	Specifies the filling rate in units/second using the PI controller. Filling rate units are feedback units/second. This function is used for filling vertical pipe systems but will be active when the filling time has expired, no matter what, until the pipe fill setpoint set in par. 29-05 is reached.

29-05 Filled Setpoint

Range:		Function:
0 s*	[0–999999,999 s]	Specifies the filled setpoint at which the pipe fill function will be disabled and the PID controller will take control. This function can be used both for horizontal and vertical pipe systems.

6.4 Parameter Options

6.4.1 Default settings

Changes during operation:

"TRUE" means that the parameter can be changed while the adjustable frequency drive is in operation and "FALSE" means that the adjustable frequency drive must be stopped before a change can be made.

4 set-up:

'All set-up': the parameter can be set individually in each of the four set-ups, i.e., one single parameter can have four different data values.

'1 set-up': the data value will be the same in all set-ups.

SR:

Size related

N/A:

No default value available.

6

Conversion index:

This number refers to a conversion figure used when writing or reading by means of an adjustable frequency drive.

Conv. index	100	75	74	70	67	6	5	4	3	2	1	0	-1	-2	-3	-4	-5	-6
Conv. factor	1	3600000	3600	60	1/60	1000000	100000	10000	1000	100	10	1	0.1	0.01	0.001	0.0001	0.00001	0.000001

Data type	**Description**	**Type**
2	Integer 8	Int8
3	Integer 16	Int16
4	Integer 32	Int32
5	Unsigned 8	Uint8
6	Unsigned 16	Uint16
7	Unsigned 32	Uint32
9	Visible String	VisStr
33	Normalized value 2 bytes	N2
35	Bit sequence of 16 Boolean variables	V2
54	Time difference w/o date	TimD

6.4.2 0-** Operation and Display

Par. No. #	Parameter description	Default value (SR = Size related)	4 set-up	Change during operation	Conver-sion index	Type
0-0* Basic Settings						
0-01	Language	[0] English	1 set-up	TRUE	-	Uint8
0-02	Motor Speed Unit	[1] Hz	2 set-ups	FALSE	-	Uint8
0-03	Regional Settings	[0] International	2 set-ups	FALSE	-	Uint8
0-04	Operating State at Power-up	[0] Resume	All set-ups	TRUE	-	Uint8
0-05	Local Mode Unit	[0] As Motor Speed Unit	2 set-ups	FALSE	-	Uint8
0-1* Set-up Operations						
0-10	Active Set-up	[1] Set-up 1	1 set-up	TRUE	-	Uint8
0-11	Programming Set-up	[9] Active Set-up	All set-ups	TRUE	-	Uint8
0-12	This Set-up Linked to	[0] Not linked	All set-ups	FALSE	-	Uint8
0-13	Readout: Linked Set-ups	0 N/A	All set-ups	FALSE	0	Uint16
0-14	Readout: Prog. Set-ups / Channel	0 N/A	All set-ups	TRUE	0	Int32
0-2* LCP Display						
0-20	Display Line 1.1 Small	1602	All set-ups	TRUE	-	Uint16
0-21	Display Line 1.2 Small	1614	All set-ups	TRUE	-	Uint16
0-22	Display Line 1.3 Small	1610	All set-ups	TRUE	-	Uint16
0-23	Display Line 2 Large	1613	All set-ups	TRUE	-	Uint16
0-24	Display Line 3 Large	1502	All set-ups	TRUE	-	Uint16
0-25	My Personal Menu	ExpressionLimit	1 set-up	TRUE	0	Uint16
0-3* LCP Cust. Readout						
0-30	Custom Readout Unit	[1] %	All set-ups	TRUE	-	Uint8
0-31	Custom Readout Min Value	ExpressionLimit	All set-ups	TRUE	-2	Int32
0-32	Custom Readout Max Value	100.00 CustomReadoutUnit	All set-ups	TRUE	-2	Int32
0-37	Display Text 1	0 N/A	1 set-up	TRUE	0	VisStr[25]
0-38	Display Text 2	0 N/A	1 set-up	TRUE	0	VisStr[25]
0-39	Display Text 3	0 N/A	1 set-up	TRUE	0	VisStr[25]
0-4* LCP Keypad						
0-40	[Hand on] Key on LCP	[1] Enabled	All set-ups	TRUE	-	Uint8
0-41	[Off] Key on LCP	[1] Enabled	All set-ups	TRUE	-	Uint8
0-42	[Auto on] Key on LCP	[1] Enabled	All set-ups	TRUE	-	Uint8
0-43	[Reset] Key on LCP	[1] Enabled	All set-ups	TRUE	-	Uint8
0-44	[Off/Reset] Key on LCP	[1] Enabled	All set-ups	TRUE	-	Uint8
0-45	[Drive Bypass] Key on LCP	[1] Enabled	All set-ups	TRUE	-	Uint8
0-5* Copy/Save						
0-50	LCP Copy	[0] No copy	All set-ups	FALSE	-	Uint8
0-51	Set-up Copy	[0] No copy	All set-ups	FALSE	-	Uint8
0-6* Password						
0-60	Main Menu Password	100 N/A	1 set-up	TRUE	0	Int16
0-61	Access to Main Menu w/o Password	[0] Full access	1 set-up	TRUE	-	Uint8
0-65	Personal Menu Password	200 N/A	1 set-up	TRUE	0	Int16
0-66	Access to Personal Menu w/o Password	[0] Full access	1 set-up	TRUE	-	Uint8
0-7* Clock Settings						
0-70	Date and Time	ExpressionLimit	All set-ups	TRUE	0	TimeOf-Day
0-71	Date Format	null	1 set-up	TRUE	-	Uint8
0-72	Time Format	null	1 set-up	TRUE	-	Uint8
0-74	DST/Summertime	[0] OFF	1 set-up	TRUE	-	Uint8
0-76	DST/Summertime Start	ExpressionLimit	1 set-up	TRUE	0	TimeOf-Day
0-77	DST/Summertime End	ExpressionLimit	1 set-up	TRUE	0	TimeOf-Day
0-79	Clock Fault	null	1 set-up	TRUE	-	Uint8
0-81	Working Days	null	1 set-up	TRUE	-	Uint8
0-82	Additional Working Days	ExpressionLimit	1 set-up	TRUE	0	TimeOf-Day
0-83	Additional Non-Working Days	ExpressionLimit	1 set-up	TRUE	0	TimeOf-Day
0-89	Date and Time Readout	0 N/A	All set-ups	TRUE	0	VisStr[25]

6.4.3 1-** Load / Motor

Par. No. #	Parameter description	Default value (SR = Size related)	4 set-up	Change during operation	Conversion index	Type
1-0* General Settings						
1-00	Configuration Mode	null	All set-ups	TRUE	-	Uint8
1-03	Torque Characteristics	[3] Auto Energy Optim. VT	All set-ups	TRUE	-	Uint8
1-06	Clockwise Direction	[0] Normal	All set-ups	FALSE	-	Uint8
1-2* Motor Data						
1-20	Motor Power [kW]	ExpressionLimit	All set-ups	FALSE	1	Uint32
1-21	Motor Power [HP]	ExpressionLimit	All set-ups	FALSE	-2	Uint32
1-22	Motor Voltage	ExpressionLimit	All set-ups	FALSE	0	Uint16
1-23	Motor Frequency	ExpressionLimit	All set-ups	FALSE	0	Uint16
1-24	Motor Current	ExpressionLimit	All set-ups	FALSE	-2	Uint32
1-25	Motor Nominal Speed	ExpressionLimit	All set-ups	FALSE	67	Uint16
1-28	Motor Rotation Check	[0] OFF	All set-ups	FALSE	-	Uint8
1-29	Automatic Motor Adaptation (AMA)	[0] Off	All set-ups	FALSE	-	Uint8
1-3* Addl. Motor Data						
1-30	Stator Resistance (Rs)	ExpressionLimit	All set-ups	FALSE	-4	Uint32
1-31	Rotor Resistance (Rr)	ExpressionLimit	All set-ups	FALSE	-4	Uint32
1-35	Main Reactance (Xh)	ExpressionLimit	All set-ups	FALSE	-4	Uint32
1-36	Iron Loss Resistance (Rfe)	ExpressionLimit	All set-ups	FALSE	-3	Uint32
1-39	Motor Poles	ExpressionLimit	All set-ups	FALSE	0	Uint8
1-5* Load-Indep. Setting						
1-50	Motor Magnetization at Zero Speed	100 %	All set-ups	TRUE	0	Uint16
1-51	Min Speed Normal Magnetizing [RPM]	ExpressionLimit	All set-ups	TRUE	67	Uint16
1-52	Min Speed Normal Magnetizing [Hz]	ExpressionLimit	All set-ups	TRUE	-1	Uint16
1-58	Flystart Test Pulses Current	30 %	All set-ups	FALSE	0	Uint16
1-59	Flystart Test Pulses Frequency	200 %	All set-ups	FALSE	0	Uint16
1-6* Load-Depend. Settg.						
1-60	Low Speed Load Compensation	100 %	All set-ups	TRUE	0	Int16
1-61	High Speed Load Compensation	100 %	All set-ups	TRUE	0	Int16
1-62	Slip Compensation	0 %	All set-ups	TRUE	0	Int16
1-63	Slip Compensation Time Constant	ExpressionLimit	All set-ups	TRUE	-2	Uint16
1-64	Resonance Dampening	100 %	All set-ups	TRUE	0	Uint16
1-65	Resonance Dampening Time Constant	5 ms	All set-ups	TRUE	-3	Uint8
1-7* Start Adjustments						
1-71	Start Delay	0.0 s	All set-ups	TRUE	-1	Uint16
1-73	Flying Start	[0] Disabled	All set-ups	TRUE	-	Uint8
1-77	Compressor Start Max Speed [RPM]	ExpressionLimit	All set-ups	TRUE	67	Uint16
1-78	Compressor Start Max Speed [Hz]	ExpressionLimit	All set-ups	TRUE	-1	Uint16
1-79	Compressor Start Max Time to Trip	5.0 s	All set-ups	TRUE	-1	Uint8
1-8* Stop Adjustments						
1-80	Function at Stop	[0] Coast	All set-ups	TRUE	-	Uint8
1-81	Min Speed for Function at Stop [RPM]	ExpressionLimit	All set-ups	TRUE	67	Uint16
1-82	Min Speed for Function at Stop [Hz]	ExpressionLimit	All set-ups	TRUE	-1	Uint16
1-86	Trip Speed Low [RPM]	ExpressionLimit	All set-ups	TRUE	67	Uint16
1-87	Trip Speed Low [Hz]	ExpressionLimit	All set-ups	TRUE	-1	Uint16
1-9* Motor Temperature						
1-90	Motor Thermal Protection	[4] ETR trip 1	All set-ups	TRUE	-	Uint8
1-91	Motor External Fan	[0] No	All set-ups	TRUE	-	Uint16
1-93	Thermistor Source	[0] None	All set-ups	TRUE	-	Uint8

6.4.4 2-** Brakes

Par. No. #	Parameter description	Default value (SR = Size related)	4 set-up	Change during operation	Conversion index	Type
2-0* DC Brake						
2-00	DC Hold/Preheat Current	50 %	All set-ups	TRUE	0	Uint8
2-01	DC Brake Current	50 %	All set-ups	TRUE	0	Uint16
2-02	DC Braking Time	10.0 s	All set-ups	TRUE	-1	Uint16
2-03	DC Brake Cut-in Speed [RPM]	ExpressionLimit	All set-ups	TRUE	67	Uint16
2-04	DC Brake Cut-in Speed [Hz]	ExpressionLimit	All set-ups	TRUE	-1	Uint16
2-1* Brake Energy Funct.						
2-10	Brake Function	[0] Off	All set-ups	TRUE	-	Uint8
2-11	Brake Resistor (ohm)	ExpressionLimit	All set-ups	TRUE	-2	Uint32
2-12	Brake Power Limit (kW)	ExpressionLimit	All set-ups	TRUE	0	Uint32
2-13	Brake Power Monitoring	[0] Off	All set-ups	TRUE	-	Uint8
2-15	Brake Check	[0] Off	All set-ups	TRUE	-	Uint8
2-16	AC Brake Max. Current	100.0 %	All set-ups	TRUE	-1	Uint32
2-17	Over-voltage Control	[2] Enabled	All set-ups	TRUE	-	Uint8

6.4.5 3-** Reference / Ramps

Par. No. #	Parameter description	Default value (SR = Size related)	4 set-up	Change during operation	Conversion index	Type
3-0* Reference Limits						
3-02	Minimum Reference	ExpressionLimit	All set-ups	TRUE	-3	Int32
3-03	Maximum Reference	ExpressionLimit	All set-ups	TRUE	-3	Int32
3-04	Reference Function	null	All set-ups	TRUE	-	Uint8
3-1* References						
3-10	Preset Reference	0.00 %	All set-ups	TRUE	-2	Int16
3-11	Jog Speed [Hz]	ExpressionLimit	All set-ups	TRUE	-1	Uint16
3-13	Reference Site	[0] Linked to Hand / Auto	All set-ups	TRUE	-	Uint8
3-14	Preset Relative Reference	0.00 %	All set-ups	TRUE	-2	Int32
3-15	Reference 1 Source	[1] Analog input 53	All set-ups	TRUE	-	Uint8
3-16	Reference 2 Source	[20] Digital pot.meter	All set-ups	TRUE	-	Uint8
3-17	Reference 3 Source	[0] No function	All set-ups	TRUE	-	Uint8
3-19	Jog Speed [RPM]	ExpressionLimit	All set-ups	TRUE	67	Uint16
3-4* Ramp 1						
3-41	Ramp 1 Ramp-up Time	ExpressionLimit	All set-ups	TRUE	-2	Uint32
3-42	Ramp 1 Ramp-down Time	ExpressionLimit	All set-ups	TRUE	-2	Uint32
3-5* Ramp 2						
3-51	Ramp 2 Ramp-up Time	ExpressionLimit	All set-ups	TRUE	-2	Uint32
3-52	Ramp 2 Ramp-down Time	ExpressionLimit	All set-ups	TRUE	-2	Uint32
3-8* Other Ramps						
3-80	Jog Ramp Time	ExpressionLimit	All set-ups	TRUE	-2	Uint32
3-81	Quick Stop Ramp Time	ExpressionLimit	2 set-ups	TRUE	-2	Uint32
3-82	Starting Ramp Up Time	ExpressionLimit	2 set-ups	TRUE	-2	Uint32
3-9* Digital Pot. meter						
3-90	Step Size	0.10 %	All set-ups	TRUE	-2	Uint16
3-91	Ramp Time	1.00 s	All set-ups	TRUE	-2	Uint32
3-92	Power Restore	[0] Off	All set-ups	TRUE	-	Uint8
3-93	Maximum Limit	100 %	All set-ups	TRUE	0	Int16
3-94	Minimum Limit	0 %	All set-ups	TRUE	0	Int16
3-95	Ramp Delay	ExpressionLimit	All set-ups	TRUE	-3	TimD

6.4.6 4-** Limits / Warnings

Par. No. #	Parameter description	Default value (SR = Size related)	4 set-up	Change during operation	Conversion index	Type
4-1* Motor Limits						
4-10	Motor Speed Direction	[2] Both directions	All set-ups	FALSE	-	Uint8
4-11	Motor Speed Low Limit [RPM]	ExpressionLimit	All set-ups	TRUE	67	Uint16
4-12	Motor Speed Low Limit [Hz]	ExpressionLimit	All set-ups	TRUE	-1	Uint16
4-13	Motor Speed High Limit [RPM]	ExpressionLimit	All set-ups	TRUE	67	Uint16
4-14	Motor Speed High Limit [Hz]	ExpressionLimit	All set-ups	TRUE	-1	Uint16
4-16	Torque Limit Motor Mode	ExpressionLimit	All set-ups	TRUE	-1	Uint16
4-17	Torque Limit Generator Mode	100.0 %	All set-ups	TRUE	-1	Uint16
4-18	Current Limit	ExpressionLimit	All set-ups	TRUE	-1	Uint32
4-19	Max Output Frequency	ExpressionLimit	All set-ups	FALSE	-1	Uint16
4-5* Adj. Warnings						
4-50	Warning Current Low	0.00 A	All set-ups	TRUE	-2	Uint32
4-51	Warning Current High	ImaxVLT (P1637)	All set-ups	TRUE	-2	Uint32
4-52	Warning Speed Low	0 RPM	All set-ups	TRUE	67	Uint16
4-53	Warning Speed High	outputSpeedHighLimit (P413)	All set-ups	TRUE	67	Uint16
4-54	Warning Reference Low	-999999.999 N/A	All set-ups	TRUE	-3	Int32
4-55	Warning Reference High	999999.999 N/A	All set-ups	TRUE	-3	Int32
4-56	Warning Feedback Low	-999999.999 ProcessCtrlUnit	All set-ups	TRUE	-3	Int32
4-57	Warning Feedback High	999999.999 ProcessCtrlUnit	All set-ups	TRUE	-3	Int32
4-58	Missing Motor Phase Function	[2] Trip 1000 ms	All set-ups	TRUE	-	Uint8
4-6* Speed Bypass						
4-60	Bypass Speed From [RPM]	ExpressionLimit	All set-ups	TRUE	67	Uint16
4-61	Bypass Speed From [Hz]	ExpressionLimit	All set-ups	TRUE	-1	Uint16
4-62	Bypass Speed to [RPM]	ExpressionLimit	All set-ups	TRUE	67	Uint16
4-63	Bypass Speed To [Hz]	ExpressionLimit	All set-ups	TRUE	-1	Uint16
4-64	Semi-Auto Bypass Set-up	[0] OFF	All set-ups	FALSE	-	Uint8

6.4.7 5-** Digital In / Out

Par. No. #	Parameter description	Default value (SR = Size related)	4 set-up	Change during operation	Conversion index	Type
5-0* Digital I/O mode						
5-00	Digital I/O Mode	[0] PNP - Active at 24 V	All set-ups	FALSE	-	Uint8
5-01	Terminal 27 Mode	[0] Input	All set-ups	TRUE	-	Uint8
5-02	Terminal 29 Mode	[0] Input	All set-ups	TRUE	-	Uint8
5-1* Digital Inputs						
5-10	Terminal 18 Digital Input	[8] Start	All set-ups	TRUE	-	Uint8
5-11	Terminal 19 Digital Input	[0] No operation	All set-ups	TRUE	-	Uint8
5-12	Terminal 27 Digital Input	null	All set-ups	TRUE	-	Uint8
5-13	Terminal 29 Digital Input	[14] Jog	All set-ups	TRUE	-	Uint8
5-14	Terminal 32 Digital Input	[0] No operation	All set-ups	TRUE	-	Uint8
5-15	Terminal 33 Digital Input	[0] No operation	All set-ups	TRUE	-	Uint8
5-16	Terminal X30/2 Digital Input	[0] No operation	All set-ups	TRUE	-	Uint8
5-17	Terminal X30/3 Digital Input	[0] No operation	All set-ups	TRUE	-	Uint8
5-18	Terminal X30/4 Digital Input	[0] No operation	All set-ups	TRUE	-	Uint8
5-3* Digital Outputs						
5-30	Terminal 27 Digital Output	[0] No operation	All set-ups	TRUE	-	Uint8
5-31	Terminal 29 digital Output	[0] No operation	All set-ups	TRUE	-	Uint8
5-32	Term X30/6 Digi Out (MCB 101)	[0] No operation	All set-ups	TRUE	-	Uint8
5-33	Term X30/7 Digi Out (MCB 101)	[0] No operation	All set-ups	TRUE	-	Uint8
5-4* Relays						
5-40	Function Relay	null	All set-ups	TRUE	-	Uint8
5-41	On Delay, Relay	0.01 s	All set-ups	TRUE	-2	Uint16
5-42	Off Delay, Relay	0.01 s	All set-ups	TRUE	-2	Uint16
5-5* Pulse Input						
5-50	Term. 29 Low Frequency	100 Hz	All set-ups	TRUE	0	Uint32
5-51	Term. 29 High Frequency	100 Hz	All set-ups	TRUE	0	Uint32
5-52	Term. 29 Low Ref./Feedb. Value	0.000 N/A	All set-ups	TRUE	-3	Int32
5-53	Term. 29 High Ref./Feedb. Value	100.000 N/A	All set-ups	TRUE	-3	Int32
5-54	Pulse Filter Time Constant #29	100 ms	All set-ups	FALSE	-3	Uint16
5-55	Term. 33 Low Frequency	100 Hz	All set-ups	TRUE	0	Uint32
5-56	Term. 33 High Frequency	100 Hz	All set-ups	TRUE	0	Uint32
5-57	Term. 33 Low Ref./Feedb. Value	0.000 N/A	All set-ups	TRUE	-3	Int32
5-58	Term. 33 High Ref./Feedb. Value	100.000 N/A	All set-ups	TRUE	-3	Int32
5-59	Pulse Filter Time Constant #33	100 ms	All set-ups	FALSE	-3	Uint16
5-6* Pulse Output						
5-60	Terminal 27 Pulse Output Variable	[0] No operation	All set-ups	TRUE	-	Uint8
5-62	Pulse Output Max Freq #27	5000 Hz	All set-ups	TRUE	0	Uint32
5-63	Terminal 29 Pulse Output Variable	[0] No operation	All set-ups	TRUE	-	Uint8
5-65	Pulse Output Max Freq #29	5000 Hz	All set-ups	TRUE	0	Uint32
5-66	Terminal X30/6 Pulse Output Variable	[0] No operation	All set-ups	TRUE	-	Uint8
5-68	Pulse Output Max Freq #X30/6	5000 Hz	All set-ups	TRUE	0	Uint32
5-9* Bus Controlled						
5-90	Digital & Relay Bus Control	0 N/A	All set-ups	TRUE	0	Uint32
5-93	Pulse Out #27 Bus Control	0.00 %	All set-ups	TRUE	-2	N2
5-94	Pulse Out #27 Timeout Preset	0.00 %	1 set-up	TRUE	-2	Uint16
5-95	Pulse Out #29 Bus Control	0.00 %	All set-ups	TRUE	-2	N2
5-96	Pulse Out #29 Timeout Preset	0.00 %	1 set-up	TRUE	-2	Uint16
5-97	Pulse Out #X30/6 Bus Control	0.00 %	All set-ups	TRUE	-2	N2
5-98	Pulse Out #X30/6 Timeout Preset	0.00 %	1 set-up	TRUE	-2	Uint16

6.4.8 6-** Analog In / Out

Par. No. #	Parameter description	Default value (SR = Size related)	4 set-up	Change during operation	Conversion index	Type
6-0* Analog I/O Mode						
6-00	Live Zero Timeout Time	10 s	All set-ups	TRUE	0	Uint8
6-01	Live Zero Timeout Function	[0] Off	All set-ups	TRUE	-	Uint8
6-02	Fire Mode Live Zero Timeout Function	[0] Off	All set-ups	TRUE	-	Uint8
6-1* Analog Input 53						
6-10	Terminal 53 Low Voltage	0.07 V	All set-ups	TRUE	-2	Int16
6-11	Terminal 53 High Voltage	10.00 V	All set-ups	TRUE	-2	Int16
6-12	Terminal 53 Low Current	4.00 mA	All set-ups	TRUE	-5	Int16
6-13	Terminal 53 High Current	20.00 mA	All set-ups	TRUE	-5	Int16
6-14	Terminal 53 Low Ref./Feedb. Value	0.000 N/A	All set-ups	TRUE	-3	Int32
6-15	Terminal 53 High Ref./Feedb. Value	ExpressionLimit	All set-ups	TRUE	-3	Int32
6-16	Terminal 53 Filter Time Constant	0.001 s	All set-ups	TRUE	-3	Uint16
6-17	Terminal 53 Live Zero	[1] Enabled	All set-ups	TRUE	-	Uint8
6-2* Analog Input 54						
6-20	Terminal 54 Low Voltage	0.07 V	All set-ups	TRUE	-2	Int16
6-21	Terminal 54 High Voltage	10.00 V	All set-ups	TRUE	-2	Int16
6-22	Terminal 54 Low Current	4.00 mA	All set-ups	TRUE	-5	Int16
6-23	Terminal 54 High Current	20.00 mA	All set-ups	TRUE	-5	Int16
6-24	Terminal 54 Low Ref./Feedb. Value	0.000 N/A	All set-ups	TRUE	-3	Int32
6-25	Terminal 54 High Ref./Feedb. Value	100.000 N/A	All set-ups	TRUE	-3	Int32
6-26	Terminal 54 Filter Time Constant	0.001 s	All set-ups	TRUE	-3	Uint16
6-27	Terminal 54 Live Zero	[1] Enabled	All set-ups	TRUE	-	Uint8
6-3* Analog Input X30/11						
6-30	Terminal X30/11 Low Voltage	0.07 V	All set-ups	TRUE	-2	Int16
6-31	Terminal X30/11 High Voltage	10.00 V	All set-ups	TRUE	-2	Int16
6-34	Term. X30/11 Low Ref./Feedb. Value	0.000 N/A	All set-ups	TRUE	-3	Int32
6-35	Term. X30/11 High Ref./Feedb. Value	100.000 N/A	All set-ups	TRUE	-3	Int32
6-36	Term. X30/11 Filter Time Constant	0.001 s	All set-ups	TRUE	-3	Uint16
6-37	Term. X30/11 Live Zero	[1] Enabled	All set-ups	TRUE	-	Uint8
6-4* Analog Input X30/12						
6-40	Terminal X30/12 Low Voltage	0.07 V	All set-ups	TRUE	-2	Int16
6-41	Terminal X30/12 High Voltage	10.00 V	All set-ups	TRUE	-2	Int16
6-44	Term. X30/12 Low Ref./Feedb. Value	0.000 N/A	All set-ups	TRUE	-3	Int32
6-45	Term. X30/12 High Ref./Feedb. Value	100.000 N/A	All set-ups	TRUE	-3	Int32
6-46	Term. X30/12 Filter Time Constant	0.001 s	All set-ups	TRUE	-3	Uint16
6-47	Term. X30/12 Live Zero	[1] Enabled	All set-ups	TRUE	-	Uint8
6-5* Analog Output 42						
6-50	Terminal 42 Output	null	All set-ups	TRUE	-	Uint8
6-51	Terminal 42 Output Min Scale	0.00 %	All set-ups	TRUE	-2	Int16
6-52	Terminal 42 Output Max Scale	100.00 %	All set-ups	TRUE	-2	Int16
6-53	Terminal 42 Output Bus Control	0.00 %	All set-ups	TRUE	-2	N2
6-54	Terminal 42 Output Timeout Preset	0.00 %	1 set-up	TRUE	-2	Uint16
6-6* Analog Output X30/8						
6-60	Terminal X30/8 Output	[0] No operation	All set-ups	TRUE	-	Uint8
6-61	Terminal X30/8 Min. Scale	0.00 %	All set-ups	TRUE	-2	Int16
6-62	Terminal X30/8 Max. Scale	100.00 %	All set-ups	TRUE	-2	Int16
6-63	Terminal X30/8 Output Bus Control	0.00 %	All set-ups	TRUE	-2	N2
6-64	Terminal X30/8 Output Timeout Preset	0.00 %	1 set-up	TRUE	-2	Uint16

6.4.9 8-** Communication and Options

Par. No. #	Parameter description	Default value (SR = Size related)	4 set-up	Change during operation	Conver-sion index	Type
8-0* General Settings						
8-01	Control Site	null	All set-ups	TRUE	-	Uint8
8-02	Control Source	null	All set-ups	TRUE	-	Uint8
8-03	Control Timeout Time	ExpressionLimit	1 set-up	TRUE	-1	Uint32
8-04	Control Timeout Function	[0] Off	1 set-up	TRUE	-	Uint8
8-05	End-of-Timeout Function	[1] Resume set-up	1 set-up	TRUE	-	Uint8
8-06	Reset Control Timeout	[0] Do not reset	All set-ups	TRUE	-	Uint8
8-07	Diagnosis Trigger	[0] Disable	2 set-ups	TRUE	-	Uint8
8-1* Control Settings						
8-10	Control Profile	[0] FC profile	All set-ups	FALSE	-	Uint8
8-13	Configurable Status Word STW	[1] Profile Default	All set-ups	TRUE	-	Uint8
8-3* FC Port Settings						
8-30	Protocol	null	1 set-up	TRUE	-	Uint8
8-31	Address	ExpressionLimit	1 set-up	TRUE	0	Uint8
8-32	Baud Rate	null	1 set-up	TRUE	-	Uint8
8-33	Parity / Stop Bits	null	1 set-up	TRUE	-	Uint8
8-34	Estimated cycle time	0 ms	2 set-ups	TRUE	-3	Uint32
8-35	Minimum Response Delay	ExpressionLimit	1 set-up	TRUE	-3	Uint16
8-36	Maximum Response Delay	ExpressionLimit	1 set-up	TRUE	-3	Uint16
8-37	Maximum Inter-Char Delay	ExpressionLimit	1 set-up	TRUE	-5	Uint16
8-4* FC MC protocol set						
8-40	Telegram selection	[1] Standard telegram 1	2 set-ups	TRUE	-	Uint8
8-42	PCD write configuration	ExpressionLimit	All set-ups	TRUE	-	Uint16
8-43	PCD read configuration	ExpressionLimit	All set-ups	TRUE	-	Uint16
8-5* Digital/Bus						
8-50	Coasting Select	[3] Logic OR	All set-ups	TRUE	-	Uint8
8-52	DC Brake Select	[3] Logic OR	All set-ups	TRUE	-	Uint8
8-53	Start Select	[3] Logic OR	All set-ups	TRUE	-	Uint8
8-54	Reverse Select	null	All set-ups	TRUE	-	Uint8
8-55	Set-up Select	[3] Logic OR	All set-ups	TRUE	-	Uint8
8-56	Preset Reference Select	[3] Logic OR	All set-ups	TRUE	-	Uint8
8-7* BACnet						
8-70	BACnet Device Instance	1 N/A	1 set-up	TRUE	0	Uint32
8-72	MS/TP Max Masters	127 N/A	1 set-up	TRUE	0	Uint8
8-73	MS/TP Max Info Frames	1 N/A	1 set-up	TRUE	0	Uint16
8-74	"I-Am" Service	[0] Send at power-up	1 set-up	TRUE	-	Uint8
8-75	Initialization Password	ExpressionLimit	1 set-up	TRUE	0	VisStr[20]
8-8* FC Port Diagnostics						
8-80	Bus Message Count	0 N/A	All set-ups	TRUE	0	Uint32
8-81	Bus Error Count	0 N/A	All set-ups	TRUE	0	Uint32
8-82	Slave Messages Rcvd	0 N/A	All set-ups	TRUE	0	Uint32
8-83	Slave Error Count	0 N/A	All set-ups	TRUE	0	Uint32
8-84	Slave Messages Sent	0 N/A	All set-ups	TRUE	0	Uint32
8-85	Slave Timeout Errors	0 N/A	All set-ups	TRUE	0	Uint32
8-89	Diagnostics Count	0 N/A	1 set-up	TRUE	0	Int32
8-9* Bus Jog						
8-90	Bus Jog 1 Speed	100 RPM	All set-ups	TRUE	67	Uint16
8-91	Bus Jog 2 Speed	200 RPM	All set-ups	TRUE	67	Uint16
8-94	Bus Feedback 1	0 N/A	1 set-up	TRUE	0	N2
8-95	Bus Feedback 2	0 N/A	1 set-up	TRUE	0	N2
8-96	Bus Feedback 3	0 N/A	1 set-up	TRUE	0	N2

6.4.10 9-** Profibus

Par. No. #	Parameter description	Default value (SR = Size related)	4 set-up	Change during operation	Conver-sion index	Type
9-00	Setpoint	0 N/A	All set-ups	TRUE	0	Uint16
9-07	Actual Value	0 N/A	All set-ups	FALSE	0	Uint16
9-15	PCD Write Configuration	ExpressionLimit	2 set-ups	TRUE	-	Uint16
9-16	PCD Read Configuration	ExpressionLimit	2 set-ups	TRUE	-	Uint16
9-18	Node Address	126 N/A	1 set-up	TRUE	0	Uint8
9-22	Telegram Selection	[108] PPO 8	1 set-up	TRUE	-	Uint8
9-23	Parameters for Signals	0	All set-ups	TRUE	-	Uint16
9-27	Parameter Edit	[1] Enabled	2 set-ups	FALSE	-	Uint16
9-28	Process Control	[1] Enable cyclic master	2 set-ups	FALSE	-	Uint8
9-44	Fault Message Counter	0 N/A	All set-ups	TRUE	0	Uint16
9-45	Fault Code	0 N/A	All set-ups	TRUE	0	Uint16
9-47	Fault Number	0 N/A	All set-ups	TRUE	0	Uint16
9-52	Fault Situation Counter	0 N/A	All set-ups	TRUE	0	Uint16
9-53	Profibus Warning Word	0 N/A	All set-ups	TRUE	0	V2
9-63	Actual Baud Rate	[255] No baud rate found	All set-ups	TRUE	-	Uint8
9-64	Device Identification	0 N/A	All set-ups	TRUE	0	Uint16
9-65	Profile Number	0 N/A	All set-ups	TRUE	0	OctStr[2]
9-67	Control Word 1	0 N/A	All set-ups	TRUE	0	V2
9-68	Status Word 1	0 N/A	All set-ups	TRUE	0	V2
9-71	Profibus Save Data Values	[0] Off	All set-ups	TRUE	-	Uint8
9-72	ProfibusDriveReset	[0] No action	1 set-up	FALSE	-	Uint8
9-80	Defined Parameters (1)	0 N/A	All set-ups	FALSE	0	Uint16
9-81	Defined Parameters (2)	0 N/A	All set-ups	FALSE	0	Uint16
9-82	Defined Parameters (3)	0 N/A	All set-ups	FALSE	0	Uint16
9-83	Defined Parameters (4)	0 N/A	All set-ups	FALSE	0	Uint16
9-84	Defined Parameters (5)	0 N/A	All set-ups	FALSE	0	Uint16
9-90	Changed Parameters (1)	0 N/A	All set-ups	FALSE	0	Uint16
9-91	Changed Parameters (2)	0 N/A	All set-ups	FALSE	0	Uint16
9-92	Changed Parameters (3)	0 N/A	All set-ups	FALSE	0	Uint16
9-93	Changed Parameters (4)	0 N/A	All set-ups	FALSE	0	Uint16
9-94	Changed parameters (5)	0 N/A	All set-ups	FALSE	0	Uint16

6.4.11 13-** Smart Logic Controller

Par. No. #	Parameter description	Default value (SR = Size related)	4 set-up	Change dur-ing operation	Conver-sion index	Type
13-0* SLC Settings						
13-00	SL Controller Mode	null	2 set-ups	TRUE	-	Uint8
13-01	Start Event	null	2 set-ups	TRUE	-	Uint8
13-02	Stop Event	null	2 set-ups	TRUE	-	Uint8
13-03	Reset SLC	[0] Do not reset SLC	All set-ups	TRUE	-	Uint8
13-1* Comparators						
13-10	Comparator Operand	null	2 set-ups	TRUE	-	Uint8
13-11	Comparator Operator	null	2 set-ups	TRUE	-	Uint8
13-12	Comparator Value	ExpressionLimit	2 set-ups	TRUE	-3	Int32
13-2* Timers						
13-20	SL Controller Timer	ExpressionLimit	1 set-up	TRUE	-3	TimD
13-4* Logic Rules						
13-40	Logic Rule Boolean 1	null	2 set-ups	TRUE	-	Uint8
13-41	Logic Rule Operator 1	null	2 set-ups	TRUE	-	Uint8
13-42	Logic Rule Boolean 2	null	2 set-ups	TRUE	-	Uint8
13-43	Logic Rule Operator 2	null	2 set-ups	TRUE	-	Uint8
13-44	Logic Rule Boolean 3	null	2 set-ups	TRUE	-	Uint8
13-5* States						
13-51	SL Controller Event	null	2 set-ups	TRUE	-	Uint8
13-52	SL Controller Action	null	2 set-ups	TRUE	-	Uint8

6.4.12 14-** Special Functions

Par. No. #	Parameter description	Default value (SR = Size related)	4 set-up	Change during operation	Conversion index	Type
14-0* Inverter Switching						
14-00	Switching Pattern	null	All set-ups	TRUE	-	Uint8
14-01	Switching Frequency	null	All set-ups	TRUE	-	Uint8
14-03	Overmodulation	[1] On	All set-ups	FALSE	-	Uint8
14-04	PWM Random	[0] Off	All set-ups	TRUE	-	Uint8
14-1* Mains On/Off						
14-10	Mains Failure	[0] No function	All set-ups	FALSE	-	Uint8
14-11	Mains Voltage at Mains Fault	ExpressionLimit	All set-ups	TRUE	0	Uint16
14-12	Function at Mains Imbalance	[0] Trip	All set-ups	TRUE	-	Uint8
14-2* Reset Functions						
14-20	Reset Mode	null	All set-ups	TRUE	-	Uint8
14-21	Automatic Restart Time	10 s	All set-ups	TRUE	0	Uint16
14-22	Operation Mode	[0] Normal operation	All set-ups	TRUE	-	Uint8
14-23	Typecode Setting	null	2 set-ups	FALSE	-	Uint8
14-25	Trip Delay at Torque Limit	60 s	All set-ups	TRUE	0	Uint8
14-26	Trip Delay at Inverter Fault	ExpressionLimit	All set-ups	TRUE	0	Uint8
14-28	Production Settings	[0] No action	All set-ups	TRUE	-	Uint8
14-29	Service Code	0 N/A	All set-ups	TRUE	0	Int32
14-3* Current Limit Ctrl.						
14-30	Current Lim Cont, Proportional Gain	100 %	All set-ups	FALSE	0	Uint16
14-31	Current Lim Contr, Integration Time	0.020 s	All set-ups	FALSE	-3	Uint16
14-32	Current Lim Ctrl, Filter Time	26.0 ms	All set-ups	TRUE	-4	Uint16
14-4* Energy Optimizing						
14-40	VT Level	66 %	All set-ups	FALSE	0	Uint8
14-41	AEO Minimum Magnetization	ExpressionLimit	All set-ups	TRUE	0	Uint8
14-42	Minimum AEO Frequency	10 Hz	All set-ups	TRUE	0	Uint8
14-43	Motor Cos-Phi	ExpressionLimit	All set-ups	TRUE	-2	Uint16
14-5* Environment						
14-50	RFI 1	[1] On	1 set-up	FALSE	-	Uint8
14-51	DC Link Compensation	[1] On	1 set-up	TRUE	-	Uint8
14-52	Fan Control	[0] Auto	All set-ups	TRUE	-	Uint8
14-53	Fan Monitor	[1] Warning	All set-ups	TRUE	-	Uint8
14-55	Output Filter	[0] No Filter	1 set-up	FALSE	-	Uint8
14-59	Actual Number of Inverter Units	ExpressionLimit	1 set-up	FALSE	0	Uint8
14-6* Auto Derate						
14-60	Function at Overtemperature	[0] Trip	All set-ups	TRUE	-	Uint8
14-61	Function at Inverter Overload	[0] Trip	All set-ups	TRUE	-	Uint8
14-62	Inv. Overload Derate Current	95 %	All set-ups	TRUE	0	Uint16

6.4.13 15-** FC Information

Par. No. #	Parameter description	Default value (SR = Size related)	4 set-up	Change during operation	Conver-sion index	Type
15-0* Operating Data						
15-00	Operating Hours	0 h	All set-ups	FALSE	74	Uint32
15-01	Running Hours	0 h	All set-ups	FALSE	74	Uint32
15-02	kWh Counter	0 kWh	All set-ups	FALSE	75	Uint32
15-03	Power-ups	0 N/A	All set-ups	FALSE	0	Uint32
15-04	Over Temps	0 N/A	All set-ups	FALSE	0	Uint16
15-05	Over Volts	0 N/A	All set-ups	FALSE	0	Uint16
15-06	Reset kWh Counter	[0] Do not reset	All set-ups	TRUE	-	Uint8
15-07	Reset Running Hours Counter	[0] Do not reset	All set-ups	TRUE	-	Uint8
15-08	Number of Starts	0 N/A	All set-ups	FALSE	0	Uint32
15-1* Data Log Settings						
15-10	Logging Source	0	2 set-ups	TRUE	-	Uint16
15-11	Logging Interval	ExpressionLimit	2 set-ups	TRUE	-3	TimD
15-12	Trigger Event	[0] FALSE	1 set-up	TRUE	-	Uint8
15-13	Logging Mode	[0] Log always	2 set-ups	TRUE	-	Uint8
15-14	Samples Before Trigger	50 N/A	2 set-ups	TRUE	0	Uint8
15-2* Historic Log						
15-20	Historic Log: Event	0 N/A	All set-ups	FALSE	0	Uint8
15-21	Historic Log: Value	0 N/A	All set-ups	FALSE	0	Uint32
15-22	Historic Log: Time	0 ms	All set-ups	FALSE	-3	Uint32
15-23	Historic Log: Date and Time	ExpressionLimit	All set-ups	FALSE	0	TimeOfDay
15-3* Alarm Log						
15-30	Alarm Log: Error Code	0 N/A	All set-ups	FALSE	0	Uint8
15-31	Alarm Log: Value	0 N/A	All set-ups	FALSE	0	Int16
15-32	Alarm Log: Time	0 s	All set-ups	FALSE	0	Uint32
15-33	Alarm Log: Date and Time	ExpressionLimit	All set-ups	FALSE	0	TimeOfDay
15-4* Drive Identification						
15-40	FC Type	0 N/A	All set-ups	FALSE	0	VisStr[6]
15-41	Power Section	0 N/A	All set-ups	FALSE	0	VisStr[20]
15-42	Voltage	0 N/A	All set-ups	FALSE	0	VisStr[20]
15-43	Software Version	0 N/A	All set-ups	FALSE	0	VisStr[5]
15-44	Ordered Typecode String	0 N/A	All set-ups	FALSE	0	VisStr[40]
15-45	Actual Typecode String	0 N/A	All set-ups	FALSE	0	VisStr[40]
15-46	Adj Freq Dr Ordering No.	0 N/A	All set-ups	FALSE	0	VisStr[8]
15-47	Power Card Ordering No.	0 N/A	All set-ups	FALSE	0	VisStr[8]
15-48	LCP ID Num.	0 N/A	All set-ups	FALSE	0	VisStr[20]
15-49	SW ID Control Card	0 N/A	All set-ups	FALSE	0	VisStr[20]
15-50	SW ID Power Card	0 N/A	All set-ups	FALSE	0	VisStr[20]
15-51	Adj Freq Dr Serial No.	0 N/A	All set-ups	FALSE	0	VisStr[10]
15-53	Power Card Serial Number	0 N/A	All set-ups	FALSE	0	VisStr[19]
15-6* Option Ident						
15-60	Option Mounted	0 N/A	All set-ups	FALSE	0	VisStr[30]
15-61	Option SW Version	0 N/A	All set-ups	FALSE	0	VisStr[20]
15-62	Option Ordering No	0 N/A	All set-ups	FALSE	0	VisStr[8]
15-63	Option Serial No	0 N/A	All set-ups	FALSE	0	VisStr[18]
15-70	Option in Slot A	0 N/A	All set-ups	FALSE	0	VisStr[30]
15-71	Slot A Option SW Version	0 N/A	All set-ups	FALSE	0	VisStr[20]
15-72	Option in Slot B	0 N/A	All set-ups	FALSE	0	VisStr[30]
15-73	Slot B Option SW Version	0 N/A	All set-ups	FALSE	0	VisStr[20]
15-74	Option in Slot C0	0 N/A	All set-ups	FALSE	0	VisStr[30]
15-75	Slot C0 Option SW Version	0 N/A	All set-ups	FALSE	0	VisStr[20]
15-76	Option in Slot C1	0 N/A	All set-ups	FALSE	0	VisStr[30]
15-77	Slot C1 Option SW Version	0 N/A	All set-ups	FALSE	0	VisStr[20]
15-9* Parameter Info						
15-92	Defined Parameters	0 N/A	All set-ups	FALSE	0	Uint16
15-93	Modified Parameters	0 N/A	All set-ups	FALSE	0	Uint16
15-98	Drive Identification	0 N/A	All set-ups	FALSE	0	VisStr[40]
15-99	Parameter Metadata	0 N/A	All set-ups	FALSE	0	Uint16

6.4.14 16-** Data Readouts

Par. No. #	Parameter description	Default value (SR = Size related)	4 set-up	Change during operation	Conversion index	Type
16-0* General Status						
16-00	Control Word	0 N/A	All set-ups	FALSE	0	V2
16-01	Reference [Unit]	0.000 ReferenceFeedbackUnit	All set-ups	FALSE	-3	Int32
16-02	Reference %	0.0 %	All set-ups	FALSE	-1	Int16
16-03	Status Word	0 N/A	All set-ups	FALSE	0	V2
16-05	Main Actual Value [%]	0.00 %	All set-ups	FALSE	-2	N2
16-09	Custom Readout	0.00 CustomReadoutUnit	All set-ups	FALSE	-2	Int32
16-1* Motor Status						
16-10	Power [kW]	0.00 kW	All set-ups	FALSE	1	Int32
16-11	Power [hp]	0.00 hp	All set-ups	FALSE	-2	Int32
16-12	Motor voltage	0.0 V	All set-ups	FALSE	-1	Uint16
16-13	Frequency	0.0 Hz	All set-ups	FALSE	-1	Uint16
16-14	Motor Current	0.00 A	All set-ups	FALSE	-2	Int32
16-15	Frequency [%]	0.00 %	All set-ups	FALSE	-2	N2
16-16	Torque [Nm]	0.0 Nm	All set-ups	FALSE	-1	Int32
16-17	Speed [RPM]	0 RPM	All set-ups	FALSE	67	Int32
16-18	Motor Thermal	0 %	All set-ups	FALSE	0	Uint8
16-22	Torque [%]	0 %	All set-ups	FALSE	0	Int16
16-26	Power Filtered [kW]	0.000 kW	All set-ups	FALSE	0	Int32
16-27	Power Filtered [hp]	0.000 hp	All set-ups	FALSE	-3	Int32
16-3* Drive Status						
16-30	DC Link Voltage	0 V	All set-ups	FALSE	0	Uint16
16-32	Brake Energy /s	0.000 kW	All set-ups	FALSE	0	Uint32
16-33	Brake Energy /2 min	0.000 kW	All set-ups	FALSE	0	Uint32
16-34	Heatsink Temp.	0 °C	All set-ups	FALSE	100	Uint8
16-35	Inverter Thermal	0 %	All set-ups	FALSE	0	Uint8
16-36	Inv. Nom. Current	ExpressionLimit	All set-ups	FALSE	-2	Uint32
16-37	Inv. Max. Current	ExpressionLimit	All set-ups	FALSE	-2	Uint32
16-38	SL Controller State	0 N/A	All set-ups	FALSE	0	Uint8
16-39	Control Card Temp.	0 °C	All set-ups	FALSE	100	Uint8
16-40	Logging Buffer Full	[0] No	All set-ups	TRUE	-	Uint8
16-43	Timed Actions Status	[0] Timed Actions Auto	All set-ups	TRUE	-	Uint8
16-49	Current Fault Source	0 N/A	All set-ups	TRUE	0	Uint8
16-5* Ref. & Feedb.						
16-50	External Reference	0.0 N/A	All set-ups	FALSE	-1	Int16
16-52	Feedback [Unit]	0.000 ProcessCtrlUnit	All set-ups	FALSE	-3	Int32
16-53	Digi Pot Reference	0.00 N/A	All set-ups	FALSE	-2	Int16
16-54	Feedback 1 [Unit]	0.000 ProcessCtrlUnit	All set-ups	FALSE	-3	Int32
16-55	Feedback 2 [Unit]	0.000 ProcessCtrlUnit	All set-ups	FALSE	-3	Int32
16-56	Feedback 3 [Unit]	0.000 ProcessCtrlUnit	All set-ups	FALSE	-3	Int32
16-58	PID Output [%]	0.0 %	All set-ups	TRUE	-1	Int16
16-6* Inputs & Outputs						
16-60	Digital Input	0 N/A	All set-ups	FALSE	0	Uint16
16-61	Terminal 53 Switch Setting	[0] Current	All set-ups	FALSE	-	Uint8
16-62	Analog Input 53	0.000 N/A	All set-ups	FALSE	-3	Int32
16-63	Terminal 54 Switch Setting	[0] Current	All set-ups	FALSE	-	Uint8
16-64	Analog Input 54	0.000 N/A	All set-ups	FALSE	-3	Int32
16-65	Analog Output 42 [mA]	0.000 N/A	All set-ups	FALSE	-3	Int16
16-66	Digital Output [bin]	0 N/A	All set-ups	FALSE	0	Int16
16-67	Pulse Input #29 [Hz]	0 N/A	All set-ups	FALSE	0	Int32
16-68	Pulse Input #33 [Hz]	0 N/A	All set-ups	FALSE	0	Int32
16-69	Pulse Output #27 [Hz]	0 N/A	All set-ups	FALSE	0	Int32
16-70	Pulse Output #29 [Hz]	0 N/A	All set-ups	FALSE	0	Int32
16-71	Relay Output [bin]	0 N/A	All set-ups	FALSE	0	Int16
16-72	Counter A	0 N/A	All set-ups	TRUE	0	Int32
16-73	Counter B	0 N/A	All set-ups	TRUE	0	Int32
16-75	Analog In X30/11	0.000 N/A	All set-ups	FALSE	-3	Int32
16-76	Analog In X30/12	0.000 N/A	All set-ups	FALSE	-3	Int32
16-77	Analog Out X30/8 [mA]	0.000 N/A	All set-ups	FALSE	-3	Int16
16-8* Fieldbus & FC Port						
16-80	Fieldbus CTW 1	0 N/A	All set-ups	FALSE	0	V2
16-82	Fieldbus REF 1	0 N/A	All set-ups	FALSE	0	N2
16-84	Comm. Option Status	0 N/A	All set-ups	FALSE	0	V2
16-85	FC Port CTW 1	0 N/A	All set-ups	FALSE	0	V2
16-86	FC Port REF 1	0 N/A	All set-ups	FALSE	0	N2
16-9* Diagnosis Readouts						
16-90	Alarm Word	0 N/A	All set-ups	FALSE	0	Uint32
16-91	Alarm word 2	0 N/A	All set-ups	FALSE	0	Uint32
16-92	Warning Word	0 N/A	All set-ups	FALSE	0	Uint32
16-93	Warning word 2	0 N/A	All set-ups	FALSE	0	Uint32
16-94	Ext. Status Word	0 N/A	All set-ups	FALSE	0	Uint32
16-95	Ext. Status Word 2	0 N/A	All set-ups	FALSE	0	Uint32
16-96	Maintenance Word	0 N/A	All set-ups	FALSE	0	Uint32

6.4.15 18-** Info & Readouts

Par. No. #	Parameter description	Default value (SR = Size related)	4 set-up	Change during operation	Conversion index	Type
18-0* Maintenance Log						
18-00	Maintenance Log: Item	0 N/A	All set-ups	FALSE	0	Uint8
18-01	Maintenance Log: Action	0 N/A	All set-ups	FALSE	0	Uint8
18-02	Maintenance Log: Time	0 s	All set-ups	FALSE	0	Uint32
18-03	Maintenance Log: Date and Time	ExpressionLimit	All set-ups	FALSE	0	TimeOf-Day
18-1* Fire Mode Log						
18-10	Fire Mode Log: Event	0 N/A	All set-ups	FALSE	0	Uint8
18-11	Fire Mode Log: Time	0 s	All set-ups	FALSE	0	Uint32
18-12	Fire Mode Log: Date and Time	ExpressionLimit	All set-ups	FALSE	0	TimeOf-Day
18-3* Inputs & Outputs						
18-30	Analog Input X42/1	0.000 N/A	All set-ups	FALSE	-3	Int32
18-31	Analog Input X42/3	0.000 N/A	All set-ups	FALSE	-3	Int32
18-32	Analog Input X42/5	0.000 N/A	All set-ups	FALSE	-3	Int32
18-33	Analog Out X42/7 [V]	0.000 N/A	All set-ups	FALSE	-3	Int16
18-34	Analog Out X42/9 [V]	0.000 N/A	All set-ups	FALSE	-3	Int16
18-35	Analog Out X42/11 [V]	0.000 N/A	All set-ups	FALSE	-3	Int16
18-5* Ref. & Feedb.						
18-50	Sensorless Readout [unit]	0.000 SensorlessUnit	All set-ups	FALSE	-3	Int32

6

6.4.16 20-** FC Closed-loop

Par. No. #	Parameter description	Default value (SR = Size related)	4 set-up	Change during operation	Conversion index	Type
18-0* Maintenance Log						
18-00	Maintenance Log: Item	0 N/A	All set-ups	FALSE	0	Uint8
18-01	Maintenance Log: Action	0 N/A	All set-ups	FALSE	0	Uint8
18-02	Maintenance Log: Time	0 s	All set-ups	FALSE	0	Uint32
18-03	Maintenance Log: Date and Time	ExpressionLimit	All set-ups	FALSE	0	TimeOf-Day
18-1* Fire Mode Log						
18-10	Fire Mode Log: Event	0 N/A	All set-ups	FALSE	0	Uint8
18-11	Fire Mode Log: Time	0 s	All set-ups	FALSE	0	Uint32
18-12	Fire Mode Log: Date and Time	ExpressionLimit	All set-ups	FALSE	0	TimeOf-Day
18-3* Inputs & Outputs						
18-30	Analog Input X42/1	0.000 N/A	All set-ups	FALSE	-3	Int32
18-31	Analog Input X42/3	0.000 N/A	All set-ups	FALSE	-3	Int32
18-32	Analog Input X42/5	0.000 N/A	All set-ups	FALSE	-3	Int32
18-33	Analog Out X42/7 [V]	0.000 N/A	All set-ups	FALSE	-3	Int16
18-34	Analog Out X42/9 [V]	0.000 N/A	All set-ups	FALSE	-3	Int16
18-35	Analog Out X42/11 [V]	0.000 N/A	All set-ups	FALSE	-3	Int16
18-5* Ref. & Feedb.						
18-50	Sensorless Readout [unit]	0.000 SensorlessUnit	All set-ups	FALSE	-3	Int32

6.4.17 21-** Ext. Closed-loop

Par. No. #	Parameter description	Default value (SR = Size related)	4 set-up	Change during operation	Conversion index	Type
21-0* Ext. CL Autotuning						
21-00	Closed-loop Type	[0] Auto	2 set-ups	TRUE	-	Uint8
21-01	PID Performance	[0] Normal	2 set-ups	TRUE	-	Uint8
21-02	PID Output Change	0.10 N/A	2 set-ups	TRUE	-2	Uint16
21-03	Minimum Feedback Level	-999999.000 N/A	2 set-ups	TRUE	-3	Int32
21-04	Maximum Feedback Level	999999.000 N/A	2 set-ups	TRUE	-3	Int32
21-09	PID Autotuning	[0] Disabled	All set-ups	TRUE	-	Uint8
21-1* Ext. CL 1 Ref./Fb.						
21-10	Ext. 1 Ref./Feedback Unit	[1] %	All set-ups	TRUE	-	Uint8
21-11	Ext. 1 Minimum Reference	0.000 ExtPID1Unit	All set-ups	TRUE	-3	Int32
21-12	Ext. 1 Maximum Reference	100.000 ExtPID1Unit	All set-ups	TRUE	-3	Int32
21-13	Ext. 1 Reference Source	[0] No function	All set-ups	TRUE	-	Uint8
21-14	Ext. 1 Feedback Source	[0] No function	All set-ups	TRUE	-	Uint8
21-15	Ext. 1 Setpoint	0.000 ExtPID1Unit	All set-ups	TRUE	-3	Int32
21-17	Ext. 1 Reference [Unit]	0.000 ExtPID1Unit	All set-ups	TRUE	-3	Int32
21-18	Ext. 1 Feedback [Unit]	0.000 ExtPID1Unit	All set-ups	TRUE	-3	Int32
21-19	Ext. 1 Output [%]	0 %	All set-ups	TRUE	0	Int32
21-2* Ext. CL 1 PID						
21-20	Ext. 1 Normal/Inverse Control	[0] Normal	All set-ups	TRUE	-	Uint8
21-21	Ext. 1 Proportional Gain	0.01 N/A	All set-ups	TRUE	-2	Uint16
21-22	Ext. 1 Integral Time	10000.00 s	All set-ups	TRUE	-2	Uint32
21-23	Ext. 1 Differentation Time	0.00 s	All set-ups	TRUE	-2	Uint16
21-24	Ext. 1 Dif. Gain Limit	5.0 N/A	All set-ups	TRUE	-1	Uint16
21-3* Ext. CL 2 Ref./Fb.						
21-30	Ext. 2 Ref./Feedback Unit	[1] %	All set-ups	TRUE	-	Uint8
21-31	Ext. 2 Minimum Reference	0.000 ExtPID2Unit	All set-ups	TRUE	-3	Int32
21-32	Ext. 2 Maximum Reference	100.000 ExtPID2Unit	All set-ups	TRUE	-3	Int32
21-33	Ext. 2 Reference Source	[0] No function	All set-ups	TRUE	-	Uint8
21-34	Ext. 2 Feedback Source	[0] No function	All set-ups	TRUE	-	Uint8
21-35	Ext. 2 Setpoint	0.000 ExtPID2Unit	All set-ups	TRUE	-3	Int32
21-37	Ext. 2 Reference [Unit]	0.000 ExtPID2Unit	All set-ups	TRUE	-3	Int32
21-38	Ext. 2 Feedback [Unit]	0.000 ExtPID2Unit	All set-ups	TRUE	-3	Int32
21-39	Ext. 2 Output [%]	0 %	All set-ups	TRUE	0	Int32
21-4* Ext. CL 2 PID						
21-40	Ext. 2 Normal/Inverse Control	[0] Normal	All set-ups	TRUE	-	Uint8
21-41	Ext. 2 Proportional Gain	0.01 N/A	All set-ups	TRUE	-2	Uint16
21-42	Ext. 2 Integral Time	10000.00 s	All set-ups	TRUE	-2	Uint32
21-43	Ext. 2 Differentation Time	0.00 s	All set-ups	TRUE	-2	Uint16
21-44	Ext. 2 Dif. Gain Limit	5.0 N/A	All set-ups	TRUE	-1	Uint16
21-5* Ext. CL 3 Ref./Fb.						
21-50	Ext. 3 Ref./Feedback Unit	[1] %	All set-ups	TRUE	-	Uint8
21-51	Ext. 3 Minimum Reference	0.000 ExtPID3Unit	All set-ups	TRUE	-3	Int32
21-52	Ext. 3 Maximum Reference	100.000 ExtPID3Unit	All set-ups	TRUE	-3	Int32
21-53	Ext. 3 Reference Source	[0] No function	All set-ups	TRUE	-	Uint8
21-54	Ext. 3 Feedback Source	[0] No function	All set-ups	TRUE	-	Uint8
21-55	Ext. 3 Setpoint	0.000 ExtPID3Unit	All set-ups	TRUE	-3	Int32
21-57	Ext. 3 Reference [Unit]	0.000 ExtPID3Unit	All set-ups	TRUE	-3	Int32
21-58	Ext. 3 Feedback [Unit]	0.000 ExtPID3Unit	All set-ups	TRUE	-3	Int32
21-59	Ext. 3 Output [%]	0 %	All set-ups	TRUE	0	Int32
21-6* Ext. CL 3 PID						
21-60	Ext. 3 Normal/Inverse Control	[0] Normal	All set-ups	TRUE	-	Uint8
21-61	Ext. 3 Proportional Gain	0.01 N/A	All set-ups	TRUE	-2	Uint16
21-62	Ext. 3 Integral Time	10000.00 s	All set-ups	TRUE	-2	Uint32
21-63	Ext. 3 Differentation Time	0.00 s	All set-ups	TRUE	-2	Uint16
21-64	Ext. 3 Dif. Gain Limit	5.0 N/A	All set-ups	TRUE	-1	Uint16

6.4.18 22-** Application Functions

Par. No. #	Parameter description	Default value (SR = Size related)	4 set-up	Change during operation	Conversion index	Type
22-0* Miscellaneous						
22-00	External Interlock Delay	0 s	All set-ups	TRUE	0	Uint16
22-01	Power Filter Time	0.50 s	2 set-ups	TRUE	-2	Uint16
22-2* No-Flow Detection						
22-20	Low Power Auto Set-up	[0] OFF	All set-ups	FALSE	-	Uint8
22-21	Low Power Detection	[0] Disabled	All set-ups	TRUE	-	Uint8
22-22	Low Speed Detection	[0] Disabled	All set-ups	TRUE	-	Uint8
22-23	No-Flow Function	[0] OFF	All set-ups	TRUE	-	Uint8
22-24	No-Flow Delay	10 s	All set-ups	TRUE	0	Uint16
22-26	Dry Pump Function	[0] OFF	All set-ups	TRUE	-	Uint8
22-27	Dry Pump Delay	10 s	All set-ups	TRUE	0	Uint16
22-3* No-Flow Power Tuning						
22-30	No-Flow Power	0.00 kW	All set-ups	TRUE	1	Uint32
22-31	Power Correction Factor	100 %	All set-ups	TRUE	0	Uint16
22-32	Low Speed [RPM]	ExpressionLimit	All set-ups	TRUE	67	Uint16
22-33	Low Speed [Hz]	ExpressionLimit	All set-ups	TRUE	-1	Uint16
22-34	Low Speed Power [kW]	ExpressionLimit	All set-ups	TRUE	1	Uint32
22-35	Low Speed Power [HP]	ExpressionLimit	All set-ups	TRUE	-2	Uint32
22-36	High Speed [RPM]	ExpressionLimit	All set-ups	TRUE	67	Uint16
22-37	High Speed [Hz]	ExpressionLimit	All set-ups	TRUE	-1	Uint16
22-38	High Speed Power [kW]	ExpressionLimit	All set-ups	TRUE	1	Uint32
22-39	High Speed Power [HP]	ExpressionLimit	All set-ups	TRUE	-2	Uint32
22-4* Sleep Mode						
22-40	Minimum Run Time	10 s	All set-ups	TRUE	0	Uint16
22-41	Minimum Sleep Time	10 s	All set-ups	TRUE	0	Uint16
22-42	Wake-up Speed [RPM]	ExpressionLimit	All set-ups	TRUE	67	Uint16
22-43	Wake-up Speed [Hz]	ExpressionLimit	All set-ups	TRUE	-1	Uint16
22-44	Wake-up Ref./FB Difference	10 %	All set-ups	TRUE	0	Int8
22-45	Setpoint Boost	0 %	All set-ups	TRUE	0	Int8
22-46	Maximum Boost Time	60 s	All set-ups	TRUE	0	Uint16
22-5* End of Curve						
22-50	End of Curve Function	[0] OFF	All set-ups	TRUE	-	Uint8
22-51	End of Curve Delay	10 s	All set-ups	TRUE	0	Uint16
22-6* Broken Belt Detection						
22-60	Broken Belt Function	[0] OFF	All set-ups	TRUE	-	Uint8
22-61	Broken Belt Torque	10 %	All set-ups	TRUE	0	Uint8
22-62	Broken Belt Delay	10 s	All set-ups	TRUE	0	Uint16
22-7* Short Cycle Protection						
22-75	Short Cycle Protection	[0] Disabled	All set-ups	TRUE	-	Uint8
22-76	Interval between Starts	start_to_start_min_on_time (P2277)	All set-ups	TRUE	0	Uint16
22-77	Minimum Run Time	0 s	All set-ups	TRUE	0	Uint16
22-78	Minimum Run Time Override	[0] Disabled	All set-ups	FALSE	-	Uint8
22-79	Minimum Run Time Override Value	0.000 ProcessCtrlUnit	All set-ups	TRUE	-3	Int32
22-8* Flow Compensation						
22-80	Flow Compensation	[0] Disabled	All set-ups	TRUE	-	Uint8
22-81	Square-linear Curve Approximation	100 %	All set-ups	TRUE	0	Uint8
22-82	Work Point Calculation	[0] Disabled	All set-ups	TRUE	-	Uint8
22-83	Speed at No-Flow [RPM]	ExpressionLimit	All set-ups	TRUE	67	Uint16
22-84	Speed at No-Flow [Hz]	ExpressionLimit	All set-ups	TRUE	-1	Uint16
22-85	Speed at Design Point [RPM]	ExpressionLimit	All set-ups	TRUE	67	Uint16
22-86	Speed at Design Point [Hz]	ExpressionLimit	All set-ups	TRUE	-1	Uint16
22-87	Pressure at No-Flow Speed	0.000 N/A	All set-ups	TRUE	-3	Int32
22-88	Pressure at Rated Speed	999999.999 N/A	All set-ups	TRUE	-3	Int32
22-89	Flow at Design Point	0.000 N/A	All set-ups	TRUE	-3	Int32
22-90	Flow at Rated Speed	0.000 N/A	All set-ups	TRUE	-3	Int32

6.4.19 23-** Time-based Funtions

Par. No. #	Parameter description	Default value (SR = Size related)	4 set-up	Change during operation	Conver-sion index	Type
23-0* Timed Actions						
23-00	ON Time	ExpressionLimit	2 set-ups	TRUE	0	TimeOfDay-WoDate
23-01	ON Action	[0] DISABLED	2 set-ups	TRUE	-	Uint8
23-02	OFF Time	ExpressionLimit	2 set-ups	TRUE	0	TimeOfDay-WoDate
23-03	OFF Action	[1] No action	2 set-ups	TRUE	-	Uint8
23-04	Occurrence	[0] All days	2 set-ups	TRUE	-	Uint8
23-0* Timed Actions Settings						
23-08	Timed Actions Mode	[0] Timed Actions Auto	2 set-ups	TRUE	-	Uint8
23-09	Timed Actions Reactivation	[1] Enabled	2 set-ups	TRUE	-	Uint8
23-1* Maintenance						
23-10	Maintenance Item	[1] Motor bearings	1 set-up	TRUE	-	Uint8
23-11	Maintenance Action	[1] Lubricate	1 set-up	TRUE	-	Uint8
23-12	Maintenance Time Base	[0] Disabled	1 set-up	TRUE	-	Uint8
23-13	Maintenance Time Interval	1 h	1 set-up	TRUE	74	Uint32
23-14	Maintenance Date and Time	ExpressionLimit	1 set-up	TRUE	0	TimeOfDay
23-1* Maintenance Reset						
23-15	Reset Maintenance Word	[0] Do not reset	All set-ups	TRUE	-	Uint8
23-16	Maintenance Text	0 N/A	1 set-up	TRUE	0	VisStr[20]
23-5* Energy Log						
23-50	Energy Log Resolution	[5] Last 24 Hours	2 set-ups	TRUE	-	Uint8
23-51	Period Start	ExpressionLimit	2 set-ups	TRUE	0	TimeOfDay
23-53	Energy Log	0 N/A	All set-ups	TRUE	0	Uint32
23-54	Reset Energy Log	[0] Do not reset	All set-ups	TRUE	-	Uint8
23-6* Trending						
23-60	Trend Variable	[0] Power [kW]	2 set-ups	TRUE	-	Uint8
23-61	Continuous Bin Data	0 N/A	All set-ups	TRUE	0	Uint32
23-62	Timed Bin Data	0 N/A	All set-ups	TRUE	0	Uint32
23-63	Timed Period Start	ExpressionLimit	2 set-ups	TRUE	0	TimeOfDay
23-64	Timed Period Stop	ExpressionLimit	2 set-ups	TRUE	0	TimeOfDay
23-65	Minimum Bin Value	ExpressionLimit	2 set-ups	TRUE	0	Uint8
23-66	Reset Continuous Bin Data	[0] Do not reset	All set-ups	TRUE	-	Uint8
23-67	Reset Timed Bin Data	[0] Do not reset	All set-ups	TRUE	-	Uint8
23-8* Payback Counter						
23-80	Power Reference Factor	100 %	2 set-ups	TRUE	0	Uint8
23-81	Energy Cost	1.00 N/A	2 set-ups	TRUE	-2	Uint32
23-82	Investment	0 N/A	2 set-ups	TRUE	0	Uint32
23-83	Energy Savings	0 kWh	All set-ups	TRUE	75	Int32
23-84	Cost Savings	0 N/A	All set-ups	TRUE	0	Int32

6.4.20 25-** Cascade Controller

Par. No. #	Parameter description	Default value (SR = Size related)	4 set-up	Change during operation	Conver-sion index	Type
25-0* System Settings						
25-00	Cascade Controller	[0] Disabled	2 set-ups	FALSE	-	Uint8
25-02	Motor Start	[0] Direct on Line	2 set-ups	FALSE	-	Uint8
25-04	Pump Cycling	[0] Disabled	All set-ups	TRUE	-	Uint8
25-05	Fixed Lead Pump	[1] Yes	2 set-ups	FALSE	-	Uint8
25-06	Number Of Pumps	2 N/A	2 set-ups	FALSE	0	Uint8
25-2* Bandwidth Settings						
25-20	Staging Bandwidth	10 %	All set-ups	TRUE	0	Uint8
25-21	Override Bandwidth	100 %	All set-ups	TRUE	0	Uint8
25-22	Fixed Speed Bandwidth	casco_staging_bandwidth (P2520)	All set-ups	TRUE	0	Uint8
25-23	SBW Staging Delay	15 s	All set-ups	TRUE	0	Uint16
25-24	SBW De-staging Delay	15 s	All set-ups	TRUE	0	Uint16
25-25	OBW Time	10 s	All set-ups	TRUE	0	Uint16
25-26	Destage At No-Flow	[0] Disabled	All set-ups	TRUE	-	Uint8
25-27	Stage Function	[1] Enabled	All set-ups	TRUE	-	Uint8
25-28	Stage Function Time	15 s	All set-ups	TRUE	0	Uint16
25-29	Destage Function	[1] Enabled	All set-ups	TRUE	-	Uint8
25-30	Destage Function Time	15 s	All set-ups	TRUE	0	Uint16
25-4* Staging Settings						
25-40	Ramp-down Delay	10.0 s	All set-ups	TRUE	-1	Uint16
25-41	Ramp-up Delay	2.0 s	All set-ups	TRUE	-1	Uint16
25-42	Staging Threshold	ExpressionLimit	All set-ups	TRUE	0	Uint8
25-43	De-staging Threshold	ExpressionLimit	All set-ups	TRUE	0	Uint8
25-44	Staging Speed [RPM]	0 RPM	All set-ups	TRUE	67	Uint16
25-45	Staging Speed [Hz]	0.0 Hz	All set-ups	TRUE	-1	Uint16
25-46	De-staging Speed [RPM]	0 RPM	All set-ups	TRUE	67	Uint16
25-47	De-staging Speed [Hz]	0.0 Hz	All set-ups	TRUE	-1	Uint16
25-5* Alternation Settings						
25-50	Lead Pump Alternation	[0] OFF	All set-ups	TRUE	-	Uint8
25-51	Alternation Event	[0] External	All set-ups	TRUE	-	Uint8
25-52	Alternation Time Interval	24 h	All set-ups	TRUE	74	Uint16
25-53	Alternation Timer Value	0 N/A	All set-ups	TRUE	0	VisStr[7]
25-54	Alternation Predefined Time	ExpressionLimit	All set-ups	TRUE	0	TimeOf-DayWoDate
25-55	Alternate if Load < 50%	[1] Enabled	All set-ups	TRUE	-	Uint8
25-56	Staging Mode at Alternation	[0] Slow	All set-ups	TRUE	-	Uint8
25-58	Run Next Pump Delay	0.1 s	All set-ups	TRUE	-1	Uint16
25-59	Run-on Line Delay	0.5 s	All set-ups	TRUE	-1	Uint16
25-8* Status						
25-80	Cascade Status	0 N/A	All set-ups	TRUE	0	VisStr[25]
25-81	Pump Status	0 N/A	All set-ups	TRUE	0	VisStr[25]
25-82	Lead Pump	0 N/A	All set-ups	TRUE	0	Uint8
25-83	Relay Status	0 N/A	All set-ups	TRUE	0	VisStr[4]
25-84	Pump ON Time	0 h	All set-ups	TRUE	74	Uint32
25-85	Relay ON Time	0 h	All set-ups	TRUE	74	Uint32
25-86	Reset Relay Counters	[0] Do not reset	All set-ups	TRUE	-	Uint8
25-9* Service						
25-90	Pump Interlock	[0] Off	All set-ups	TRUE	-	Uint8
25-91	Manual Alternation	0 N/A	All set-ups	TRUE	0	Uint8

6.4.21 26-** Analog I / O Option MCB 109

Par. No. #	Parameter description	Default value (SR = Size related)	4 set-up	Change during operation	Conversion index	Type
26-0* Analog I/O Mode						
26-00	Terminal X42/1 Mode	[1] Voltage	All set-ups	TRUE	-	Uint8
26-01	Terminal X42/3 Mode	[1] Voltage	All set-ups	TRUE	-	Uint8
26-02	Terminal X42/5 Mode	[1] Voltage	All set-ups	TRUE	-	Uint8
26-1* Analog Input X42/1						
26-10	Terminal X42/1 Low Voltage	0.07 V	All set-ups	TRUE	-2	Int16
26-11	Terminal X42/1 High Voltage	10.00 V	All set-ups	TRUE	-2	Int16
26-14	Term. X42/1 Low Ref./Feedb. Value	0.000 N/A	All set-ups	TRUE	-3	Int32
26-15	Term. X42/1 High Ref./Feedb. Value	100.000 N/A	All set-ups	TRUE	-3	Int32
26-16	Term. X42/1 Filter Time Constant	0.001 s	All set-ups	TRUE	-3	Uint16
26-17	Term. X42/1 Live Zero	[1] Enabled	All set-ups	TRUE	-	Uint8
26-2* Analog Input X42/3						
26-20	Terminal X42/3 Low Voltage	0.07 V	All set-ups	TRUE	-2	Int16
26-21	Terminal X42/3 High Voltage	10.00 V	All set-ups	TRUE	-2	Int16
26-24	Term. X42/3 Low Ref./Feedb. Value	0.000 N/A	All set-ups	TRUE	-3	Int32
26-25	Term. X42/3 High Ref./Feedb. Value	100.000 N/A	All set-ups	TRUE	-3	Int32
26-26	Term. X42/3 Filter Time Constant	0.001 s	All set-ups	TRUE	-3	Uint16
26-27	Term. X42/3 Live Zero	[1] Enabled	All set-ups	TRUE	-	Uint8
26-3* Analog Input X42/5						
26-30	Terminal X42/5 Low Voltage	0.07 V	All set-ups	TRUE	-2	Int16
26-31	Terminal X42/5 High Voltage	10.00 V	All set-ups	TRUE	-2	Int16
26-34	Term. X42/5 Low Ref./Feedb. Value	0.000 N/A	All set-ups	TRUE	-3	Int32
26-35	Term. X42/5 High Ref./Feedb. Value	100.000 N/A	All set-ups	TRUE	-3	Int32
26-36	Term. X42/5 Filter Time Constant	0.001 s	All set-ups	TRUE	-3	Uint16
26-37	Term. X42/5 Live Zero	[1] Enabled	All set-ups	TRUE	-	Uint8
26-4* Analog Out X42/7						
26-40	Terminal X42/7 Output	[0] No operation	All set-ups	TRUE	-	Uint8
26-41	Terminal X42/7 Min. Scale	0.00 %	All set-ups	TRUE	-2	Int16
26-42	Terminal X42/7 Max. Scale	100.00 %	All set-ups	TRUE	-2	Int16
26-43	Terminal X42/7 Bus Control	0.00 %	All set-ups	TRUE	-2	N2
26-44	Terminal X42/7 Timeout Preset	0.00 %	1 set-up	TRUE	-2	Uint16
26-5* Analog Out X42/9						
26-50	Terminal X42/9 Output	[0] No operation	All set-ups	TRUE	-	Uint8
26-51	Terminal X42/9 Min. Scale	0.00 %	All set-ups	TRUE	-2	Int16
26-52	Terminal X42/9 Max. Scale	100.00 %	All set-ups	TRUE	-2	Int16
26-53	Terminal X42/9 Bus Control	0.00 %	All set-ups	TRUE	-2	N2
26-54	Terminal X42/9 Timeout Preset	0.00 %	1 set-up	TRUE	-2	Uint16
26-6* Analog Out X42/11						
26-60	Terminal X42/11 Output	[0] No operation	All set-ups	TRUE	-	Uint8
26-61	Terminal X42/11 Min. Scale	0.00 %	All set-ups	TRUE	-2	Int16
26-62	Terminal X42/11 Max. Scale	100.00 %	All set-ups	TRUE	-2	Int16
26-63	Terminal X42/11 Bus Control	0.00 %	All set-ups	TRUE	-2	N2
26-64	Terminal X42/11 Timeout Preset	0.00 %	1 set-up	TRUE	-2	Uint16

6.5 Parameter Options - Filter

6.5.1 Operation/Display 0-**

Par. No. #	Parameter description	Default value (SR = Size related)	4 set-up	FC 302 only	Change during operation	Conversion index	Type
0-0* Basic Settings							
0-01	Language	[0] English	1 set-up		TRUE	-	Uint8
0-04	Operating State at Power-up (Hand)	[1] Forced stop	All set-ups		TRUE	-	Uint8
0-1* Set-up Operations							
0-10	Active Set-up	[1] Set-up 1	1 set-up		TRUE	-	Uint8
0-11	Edit Set-up	[1] Set-up 1	All set-ups		TRUE	-	Uint8
0-12	This Set-up Linked to	[0] Not linked	All set-ups		FALSE	-	Uint8
0-13	Readout: Linked Set-ups	0 N/A	All set-ups		FALSE	0	Uint16
0-14	Readout: Edit Set-ups / Channel	0 N/A	All set-ups		TRUE	0	Int32
0-2* LCP Display							
0-20	Display Line 1.1 Small	30112	All set-ups		TRUE	-	Uint16
0-21	Display Line 1.2 Small	30110	All set-ups		TRUE	-	Uint16
0-22	Display Line 1.3 Small	30120	All set-ups		TRUE	-	Uint16
0-23	Display Line 2 Large	30100	All set-ups		TRUE	-	Uint16
0-24	Display Line 3 Large	30121	All set-ups		TRUE	-	Uint16
0-25	My Personal Menu	ExpressionLimit	1 set-up		TRUE	0	Uint16
0-4* LCP Keypad							
0-40	[Hand on] Key on LCP	[1] Enabled	All set-ups		TRUE	-	Uint8
0-41	[Off] Key on LCP	[1] Enabled	All set-ups		TRUE	-	Uint8
0-42	[Auto on] Key on LCP	[1] Enabled	All set-ups		TRUE	-	Uint8
0-43	[Reset] Key on LCP	[1] Enabled	All set-ups		TRUE	-	Uint8
0-5* Copy/Save							
0-50	LCP Copy	[0] No copy	All set-ups		FALSE	-	Uint8
0-51	Set-up Copy	[0] No copy	All set-ups		FALSE	-	Uint8
0-6* Password							
0-60	Main Menu Password	100 N/A	1 set-up		TRUE	0	Int16
0-61	Access to Main Menu w/o Password	[0] Full access	1 set-up		TRUE	-	Uint8
0-65	Quick Menu Password	200 N/A	1 set-up		TRUE	0	Int16
0-66	Access to Quick Menu w/o Password	[0] Full access	1 set-up		TRUE	-	Uint8

6.5.2 Digital In/Out 5-**

Par. No. #	Parameter description	Default value (SR = Size related)	4 set-up	FC 302 only	Change during operation	Conversion index	Type
5-0* Digital I/O mode							
5-00	Digital I/O Mode	[0] PNP	All set-ups		FALSE	-	Uint8
5-01	Terminal 27 Mode	[0] Input	All set-ups		TRUE	-	Uint8
5-02	Terminal 29 Mode	[0] Input	All set-ups	x	TRUE	-	Uint8
5-1* Digital Inputs							
5-10	Terminal 18 Digital Input	[8] Start	All set-ups		TRUE	-	Uint8
5-11	Terminal 19 Digital Input	[0] No operation	All set-ups		TRUE	-	Uint8
5-12	Terminal 27 Digital Input	[0] No operation	All set-ups		TRUE	-	Uint8
5-13	Terminal 29 Digital Input	[0] No operation	All set-ups		TRUE	-	Uint8
5-14	Terminal 32 Digital Input	[90] AC Contactor	All set-ups		TRUE	-	Uint8
5-15	Terminal 33 Digital Input	[91] DC Contactor	All set-ups		TRUE	-	Uint8
5-16	Terminal X30/2 Digital Input	[0] No operation	All set-ups		TRUE	-	Uint8
5-17	Terminal X30/3 Digital Input	[0] No operation	All set-ups		TRUE	-	Uint8
5-18	Terminal X30/4 Digital Input	[0] No operation	All set-ups		TRUE	-	Uint8
5-19	Terminal 37 Safe Stop	[1] Safe Stop Alarm	1 set-up		TRUE	-	Uint8
5-20	Terminal X46/1 Digital Input	[0] No operation	All set-ups		TRUE	-	Uint8
5-21	Terminal X46/3 Digital Input	[0] No operation	All set-ups		TRUE	-	Uint8
5-22	Terminal X46/5 Digital Input	[0] No operation	All set-ups		TRUE	-	Uint8
5-23	Terminal X46/7 Digital Input	[0] No operation	All set-ups		TRUE	-	Uint8
5-24	Terminal X46/9 Digital Input	[0] No operation	All set-ups		TRUE	-	Uint8
5-25	Terminal X46/11 Digital Input	[0] No operation	All set-ups		TRUE	-	Uint8
5-26	Terminal X46/13 Digital Input	[0] No operation	All set-ups		TRUE	-	Uint8
5-3* Digital Outputs							
5-30	Terminal 27 Digital Output	[0] No operation	All set-ups		TRUE	-	Uint8
5-31	Terminal 29 Digital Output	[0] No operation	All set-ups	x	TRUE	-	Uint8
5-32	Term X30/6 Digi Out (MCB 101)	[0] No operation	All set-ups		TRUE	-	Uint8
5-33	Term X30/7 Digi Out (MCB 101)	[0] No operation	All set-ups		TRUE	-	Uint8
5-4* Relays							
5-40	Function Relay	[0] No operation	All set-ups		TRUE	-	Uint8
5-41	On Delay, Relay	0.30 s	All set-ups		TRUE	-2	Uint16
5-42	Off Delay, Relay	0.30 s	All set-ups		TRUE	-2	Uint16

6.5.3 Comm. and Options 8-**

Par. No. #	Parameter description	Default value (SR = Size related)	4 set-up	FC 302 only	Change during operation	Conversion index	Type
8-0* General Settings							
8-01	Control Site	[0] Digital and ctrl.word	All set-ups		TRUE	-	Uint8
8-02	Control Word Source	null	All set-ups		TRUE	-	Uint8
8-03	Control Word Timeout Time	1.0 s	1 set-up		TRUE	-1	Uint32
8-04	Control Word Timeout Function	[0] Off	1 set-up		TRUE	-	Uint8
8-05	End-of-Timeout Function	[1] Resume set-up	1 set-up		TRUE	-	Uint8
8-06	Reset Control Word Timeout	[0] Do not reset	All set-ups		TRUE	-	Uint8
8-3* FC Port Settings							
8-30	Protocol	[1] FC MC	1 set-up		TRUE	-	Uint8
8-31	Address	2 N/A	1 set-up		TRUE	0	Uint8
8-32	FC Port Baud Rate	[2] 9600 Baud	1 set-up		TRUE	-	Uint8
8-35	Minimum Response Delay	10 ms	All set-ups		TRUE	-3	Uint16
8-36	Max Response Delay	5000 ms	1 set-up		TRUE	-3	Uint16
8-37	Max Inter-Char Delay	25 ms	1 set-up		TRUE	-3	Uint16
8-5* Digital/Bus							
8-53	Start Select	[3] Logic OR	All set-ups		TRUE	-	Uint8
8-55	Set-up Select	[3] Logic OR	All set-ups		TRUE	-	Uint8

6.5.4 Special Functions 14-**

Par. No. #	Parameter description	Default value (SR = Size related)	4 set-up	FC 302 only	Change during operation	Conversion index	Type
14-2*	**Trip Reset**						
14-20	Reset Mode	[0] Manual reset	All set-ups		TRUE	-	Uint8
14-21	Automatic Restart Time	10 s	All set-ups		TRUE	0	Uint16
14-22	Operation Mode	[0] Normal operation	All set-ups		TRUE	-	Uint8
14-23	Typecode Setting	null	2 set-ups		FALSE	-	Uint8
14-28	Production Settings	[0] No action	All set-ups		TRUE	-	Uint8
14-29	Service Code	0 N/A	All set-ups		TRUE	0	Int32
14-5*	**Environment**						
14-50	RFI filter	[1] On	1 set-up		FALSE	-	Uint8
14-53	Fan Monitor	[1] Warning	All set-ups		TRUE	-	Uint8
14-54	Bus Partner	1 N/A	2 set-ups		TRUE	0	Uint16

6.5.5 FC Information 15-**

Par. No. #	Parameter description	Default value (SR = Size related)	4 set-up	FC 302 only	Change during operation	Conver-sion index	Type
15-0*	**Operating Data**						
15-00	Operating Hours	0 h	All set-ups		FALSE	74	Uint32
15-01	Running Hours	0 h	All set-ups		FALSE	74	Uint32
15-03	Power-ups	0 N/A	All set-ups		FALSE	0	Uint32
15-04	Overtemps	0 N/A	All set-ups		FALSE	0	Uint16
15-05	Overvolts	0 N/A	All set-ups		FALSE	0	Uint16
15-07	Reset Running Hours Counter	[0] Do not reset	All set-ups		TRUE	-	Uint8
15-1*	**Data Log Settings**						
15-10	Logging Source	0	2 set-ups		TRUE	-	Uint16
15-11	Logging Interval	ExpressionLimit	2 set-ups		TRUE	-3	TimD
15-12	Trigger Event	[0] False	1 set-up		TRUE	-	Uint8
15-13	Logging Mode	[0] Log always	2 set-ups		TRUE	-	Uint8
15-14	Samples Before Trigger	50 N/A	2 set-ups		TRUE	0	Uint8
15-2*	**Historic Log**						
15-20	Historic Log: Event	0 N/A	All set-ups		FALSE	0	Uint8
15-21	Historic Log: Value	0 N/A	All set-ups		FALSE	0	Uint32
15-22	Historic Log: Time	0 ms	All set-ups		FALSE	-3	Uint32
15-3*	**Fault Log**						
15-30	Fault Log: Error Code	0 N/A	All set-ups		FALSE	0	Uint16
15-31	Fault Log: Value	0 N/A	All set-ups		FALSE	0	Int16
15-32	Fault Log: Time	0 s	All set-ups		FALSE	0	Uint32
15-4*	**Unit Identification**						
15-40	FC Type	0 N/A	All set-ups		FALSE	0	VisStr[6]
15-41	Power Section	0 N/A	All set-ups		FALSE	0	VisStr[20]
15-42	Voltage	0 N/A	All set-ups		FALSE	0	VisStr[20]
15-43	Software Version	0 N/A	All set-ups		FALSE	0	VisStr[5]
15-44	Ordered Typecode String	0 N/A	All set-ups		FALSE	0	VisStr[40]
15-45	Actual Typecode String	0 N/A	All set-ups		FALSE	0	VisStr[40]
15-46	Unit Ordering No	0 N/A	All set-ups		FALSE	0	VisStr[8]
15-47	Power Card Ordering No	0 N/A	All set-ups		FALSE	0	VisStr[8]
15-48	LCP ID No	0 N/A	All set-ups		FALSE	0	VisStr[20]
15-49	SW ID Control Card	0 N/A	All set-ups		FALSE	0	VisStr[20]
15-50	SW ID Power Card	0 N/A	All set-ups		FALSE	0	VisStr[20]
15-51	Unit Serial Number	0 N/A	All set-ups		FALSE	0	VisStr[10]
15-53	Power Card Serial Number	0 N/A	All set-ups		FALSE	0	VisStr[19]
15-6*	**Option Ident**						
15-60	Option Mounted	0 N/A	All set-ups		FALSE	0	VisStr[30]
15-61	Option SW Version	0 N/A	All set-ups		FALSE	0	VisStr[20]
15-62	Option Ordering No	0 N/A	All set-ups		FALSE	0	VisStr[8]
15-63	Option Serial No	0 N/A	All set-ups		FALSE	0	VisStr[18]
15-70	Option in Slot A	0 N/A	All set-ups		FALSE	0	VisStr[30]
15-71	Slot A Option SW Version	0 N/A	All set-ups		FALSE	0	VisStr[20]
15-72	Option in Slot B	0 N/A	All set-ups		FALSE	0	VisStr[30]
15-73	Slot B Option SW Version	0 N/A	All set-ups		FALSE	0	VisStr[20]
15-74	Option in Slot C0	0 N/A	All set-ups		FALSE	0	VisStr[30]
15-75	Slot C0 Option SW Version	0 N/A	All set-ups		FALSE	0	VisStr[20]
15-76	Option in Slot C1	0 N/A	All set-ups		FALSE	0	VisStr[30]
15-77	Slot C1 Option SW Version	0 N/A	All set-ups		FALSE	0	VisStr[20]
15-9*	**Parameter Info**						
15-92	Defined Parameters	0 N/A	All set-ups		FALSE	0	Uint16
15-93	Modified Parameters	0 N/A	All set-ups		FALSE	0	Uint16
15-98	Unit Identification	0 N/A	All set-ups		FALSE	0	VisStr[40]
15-99	Parameter Metadata	0 N/A	All set-ups		FALSE	0	Uint16

6.5.6 Data Readouts 16-**

Par. No. #	Parameter description	Default value (SR = Size related)	4 set-up	FC 302 only	Change during operation	Conversion index	Type
16-0*	**General Status**						
16-00	Control Word	0 N/A	All set-ups		FALSE	0	V2
16-03	Status Word	0 N/A	All set-ups		FALSE	0	V2
16-3*	**AF Status**						
16-30	DC Link Voltage	0 V	All set-ups		FALSE	0	Uint16
16-34	Heatsink Temp.	0 °C	All set-ups		FALSE	100	Uint8
16-35	Inverter Thermal	0 %	All set-ups		FALSE	0	Uint8
16-36	Inv. Nom. Current	ExpressionLimit	All set-ups		FALSE	-2	Uint32
16-37	Inv. Max. Current	ExpressionLimit	All set-ups		FALSE	-2	Uint32
16-39	Control Card Temp.	0 °C	All set-ups		FALSE	100	Uint8
16-40	Logging Buffer Full	[0] No	All set-ups		TRUE	-	Uint8
16-49	Current Fault Source	0 N/A	All set-ups		TRUE	0	Uint8
16-6*	**Inputs & Outputs**						
16-60	Digital Input	0 N/A	All set-ups		FALSE	0	Uint16
16-66	Digital Output [bin]	0 N/A	All set-ups		FALSE	0	Int16
16-71	Relay Output [bin]	0 N/A	All set-ups		FALSE	0	Int16
16-8*	**Fieldbus & FC Port**						
16-80	Fieldbus CTW 1	0 N/A	All set-ups		FALSE	0	V2
16-84	Comm. Option STW	0 N/A	All set-ups		FALSE	0	V2
16-85	FC Port CTW 1	0 N/A	All set-ups		FALSE	0	V2
16-9*	**Diagnosis Readouts**						
16-90	Alarm Word	0 N/A	All set-ups		FALSE	0	Uint32
16-91	Alarm Word 2	0 N/A	All set-ups		FALSE	0	Uint32
16-92	Warning Word	0 N/A	All set-ups		FALSE	0	Uint32
16-93	Warning Word 2	0 N/A	All set-ups		FALSE	0	Uint32
16-94	Ext. Status Word	0 N/A	All set-ups		FALSE	0	Uint32

6

6.5.7 AF Settings 300-**

NOTE!

Except for par. 300-10, it is not recommended to change the settings in this par. group for the Low Harmonic Drive.

Par. No. #	Parameter description	Default value (SR = Size related)	4 set-up	FC 302 only	Change during operation	Conversion index	Type
300-0*	**General Settings**						
300-00	Harmonic Cancellation Mode	[0] Overall	All set-ups		TRUE	-	Uint8
300-01	Compensation Priority	[0] Harmonics	All set-ups		TRUE	-	Uint8
300-1*	**Network Settings**						
300-10	Active Filter Nominal Voltage	ExpressionLimit	2 set-ups		FALSE	0	Uint32
300-2*	**CT Settings**						
300-20	CT Primary Rating	ExpressionLimit	2 set-ups		FALSE	0	Uint32
300-21	CT Secondary Rating	[1] 5A	2 set-ups		FALSE	-	Uint8
300-22	CT Nominal Voltage	342 V	2 set-ups		FALSE	0	Uint32
300-24	CT Sequence	[0] L1, L2, L3	2 set-ups		FALSE	-	Uint8
300-25	CT Polarity	[0] Normal	2 set-ups		FALSE	-	Uint8
300-26	CT Placement	[1] Load Current	2 set-ups		FALSE	-	Uint8
300-29	Start Auto CT Detection	[0] Off	All set-ups		FALSE	-	Uint8
300-3*	**Compensation**						
300-30	Compensation Points	0.0 A	All set-ups		TRUE	-1	Uint32
300-35	Cos-phi Reference	0.500 N/A	All set-ups		TRUE	-3	Uint16

6.5.8 AF Readouts301-**

Par. No. #	Parameter description	Default value (SR = Size related)	4 set-up	FC 302 only	Change during operation	Conversion index	Type
301-0* Output Currents							
301-00	Output Current [A]	0.00 A	All set-ups		TRUE	-2	Int32
301-01	Output Current [%]	0.0 %	All set-ups		TRUE	-1	Int32
301-1* Unit Performance							
301-10	THD of Current [%]	0.0 %	All set-ups		TRUE	-1	Uint16
301-12	Power Factor	0.00 N/A	All set-ups		TRUE	-2	Uint16
301-13	Cos-phi	0.00 N/A	All set-ups		TRUE	-2	Int16
301-14	Leftover Currents	0.0 A	All set-ups		TRUE	-1	Uint32
301-2* Line Power Status							
301-20	Line Power Current [A]	0 A	All set-ups		TRUE	0	Int32
301-21	Line Power Frequency	0 Hz	All set-ups		TRUE	0	Uint8
301-22	Fund. Line Power Current [A]	0 A	All set-ups		TRUE	0	Int32

7 RS-485 Installation and Set-up

7.1.1 Overview

RS-485 is a two-wire bus interface compatible with multi-drop network topology, i.e., nodes can be connected as a bus, or via drop cables from a common trunk line. A total of 32 nodes can be connected to one network segment.

Network segments are divided up by repeaters. Please note that each repeater functions as a node within the segment in which it is installed. Each node connected within a given network must have a unique node address across all segments.

Terminate each segment at both ends using either the termination switch (S801) of the adjustable frequency drives or a biased termination resistor network. Always use shielded twisted pair (STP) cable for bus cabling, and always follow good common installation practice.

Low-impedance ground connection of the shield at every node is very important, also at high frequencies. This can be achieved by connecting a large surface of the shield to ground, by means of a cable clamp or a conductive cable connector, for example. It may be necessary to apply potential-equalizing cables to maintain the same ground potential throughout the network, particularly in installations where there are long lengths of cable.

To prevent impedance mismatch, always use the same type of cable throughout the entire network. When connecting a motor to the adjustable frequency drive, always use shielded motor cable.

Cable: Shielded twisted pair (STP)
Impedance: 120 Ohm
Cable length: Max. 3,396 ft [1200 m] (including drop lines)
Max. 1,640 ft [500 m] station-to-station

7.1.2 Network Connection

Connect the adjustable frequency drive to the RS-485 network as follows (see also diagram):

1. Connect signal wires to terminal 68 (P+) and terminal 69 (N-) on the main control board of the adjustable frequency drive.
2. Connect the cable screen to the cable clamps.

NOTE!
Shielded, twisted-pair cables are recommended in order to reduce noise between conductors.

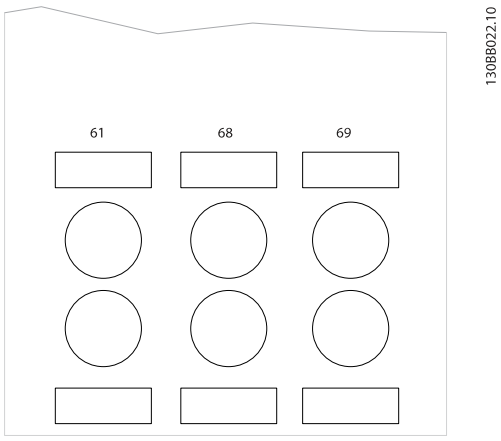

Figure 7.1: Network Terminal Connection

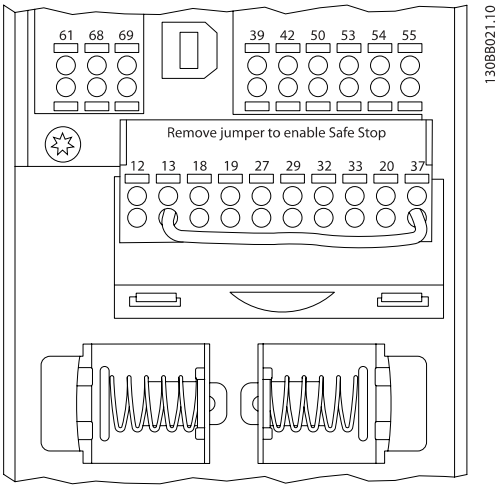

Figure 7.2: Control card terminals

7

7.1.3 RS-485 Bus Termination

Use the terminator dip switch on the main control board of the adjustable frequency drive to terminate the RS-485 bus.

NOTE!
The factory setting for the dip switch is OFF.

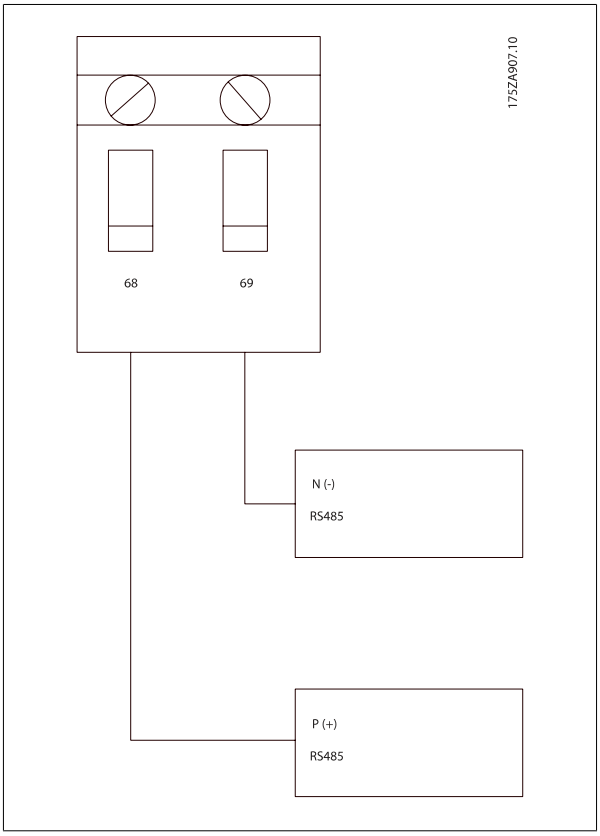

Terminator Switch Factory Setting

7.1.4 EMC Precautions

The following EMC precautions are recommended in order to achieve interference-free operation of the RS-485 network.

Relevant national and local regulations, for example regarding protective ground connection, must be observed. The RS-485 communication cable must be kept away from motor and brake resistor cables to avoid coupling of high frequency noise from one cable to another. Normally a distance of 200 mm (8 inches) is sufficient, but keeping the greatest possible distance between the cables is generally recommended, especially where cables run in parallel over long distances. When crossing is unavoidable, the RS-485 cable must cross motor and brake resistor cables at an angle of 90 degrees.

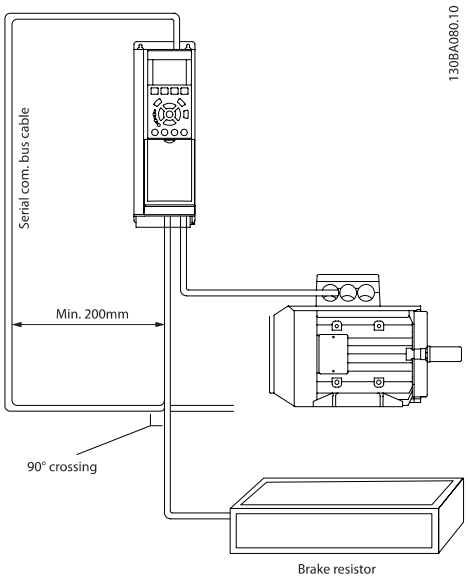

The adjustable frequency drive protocol, also referred to as adjustable frequency drive bus or standard bus, is the Danfoss standard serial communication bus. It defines an access technique according to the master-slave principle for communications via a serial bus.
One master and a maximum of 126 slaves can be connected to the bus. The individual slaves are selected by the master via an address character in the message. A slave itself can never transmit without first being requested to do so, and direct message transfer between the individual slaves is not possible. Communications occur in the half-duplex mode.
The master function cannot be transferred to another node (single-master system).

The physical layer is RS-485, thus utilizing the RS-485 port built into the adjustable frequency drive. The adjustable frequency protocol supports different message formats; a short format of 8 bytes for process data, and a long format of 16 bytes that also includes a parameter channel. A third message format is used for texts.

7.3 Network Configuration

7.3.1 FC 300 Adjustable Frequency Drive Set-up

Set the following parameters to enable the Adjustable Frequency protocol for the adjustable frequency drive.

Parameter Number	Setting
Par. 8-30 *Protocol*	FC
Par. 8-31 *Address*	1 - 126
Par. 8-32 *FC Port Baud Rate*	2400 - 115200
Par. 8-33 *Parity / Stop Bits*	Even parity, 1 stop bit (default)

7.4 FC Protocol Message Framing Structure

7.4.1 Content of a Character (byte)

Each character transferred begins with a start bit. Then 8 data bits are transferred, corresponding to a byte. Each character is secured via a parity bit, which is set at "1" when it reaches parity (i.e., when there is an equal number of 1's in the 8 data bits and the parity bit in total). A character is completed by a stop bit, thus consisting of 11 bits in all.

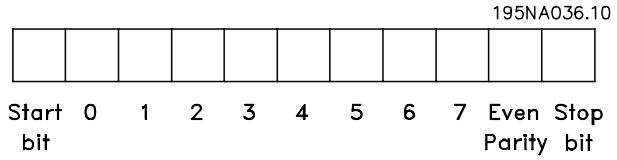

7.4.2 Message Structure

Each message begins with a start character (STX)=02 Hex, followed by a byte denoting the message length (LGE) and a byte denoting the adjustable frequency drive address (ADR). A number of data bytes (variable, depending on the type of message) follows. The message is completed by a data control byte (BCC).

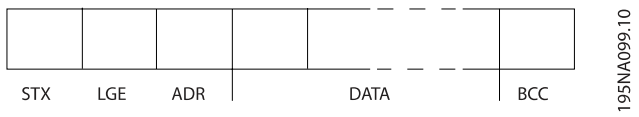

7.4.3 Message Length (LGE)

The message length is the number of data bytes plus the address byte ADR and the data control byte BCC.

The length of messages with 4 data bytes is	LGE = 4 + 1 + 1 = 6 bytes
The length of messages with 12 data bytes is	LGE = 12 + 1 + 1 = 14 bytes
The length of messages containing texts is	10[1)]+n bytes

[1)] The 10 represents the fixed characters, while the "n" is variable (depending on the length of the text).

7.4.4 Adjustable Frequency Drive Address (ADR)

Two different address formats are used.
The address range of the adjustable frequency drive is either 1-31 or 1-126.

1. Address format 1-31:
Bit 7 = 0 (address format 1-31 active)
Bit 6 is not used
Bit 5 = 1: Broadcast, address bits (0-4) are not used
Bit 5 = 0: No Broadcast
Bit 0-4 = Adjustable frequency drive address 1-31

2. Address format 1-126:
Bit 7 = 1 (address format 1-126 active)
Bit 0-6 = Adjustable frequency drive address 1-126
Bit 0-6 = 0 Broadcast

The slave returns the address byte unchanged to the master in the response telegram.

7.4.5 Data Control Byte (BCC)

The checksum is calculated as an XOR-function. Before the first byte in the telegram is received, the calculated checksum is 0.

7.4.6 The Data Field

The structure of data blocks depends on the type of message. There are three message types, and the type applies for both control messages (master=>slave) and response messages (slave=>master).

The three types of message are:

Process block (PCD):
The PCD is made up of a data block of four bytes (2 words) and contains:
- Control word and reference value (from master to slave)
- Status word and present output frequency (from slave to master).

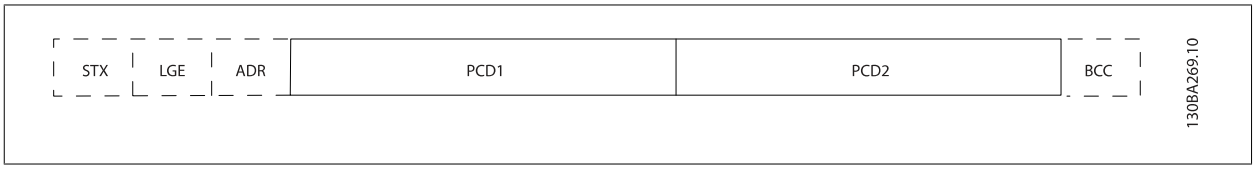

Parameter block:
The parameter block is used to transfer parameters between master and slave. The data block is made up of 12 bytes (6 words) and also contains the process block.

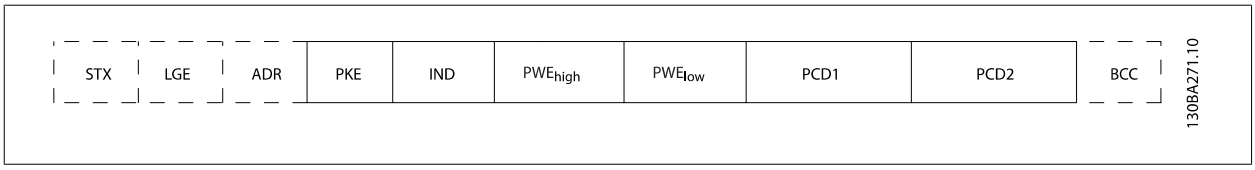

Text block:
The text block is used to read or write texts via the data block.

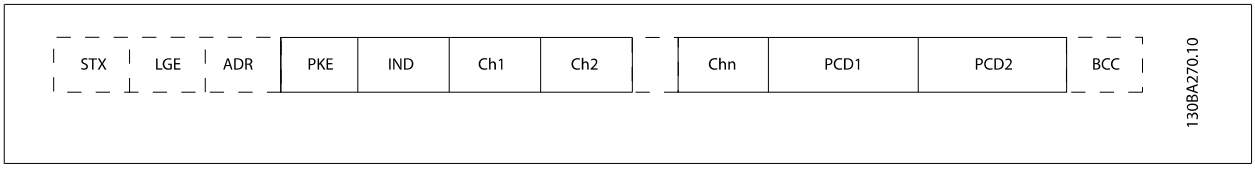

7.4.7 The PKE Field

The PKE field contains two sub-fields: Parameter command and response AK, and Parameter number PNU:

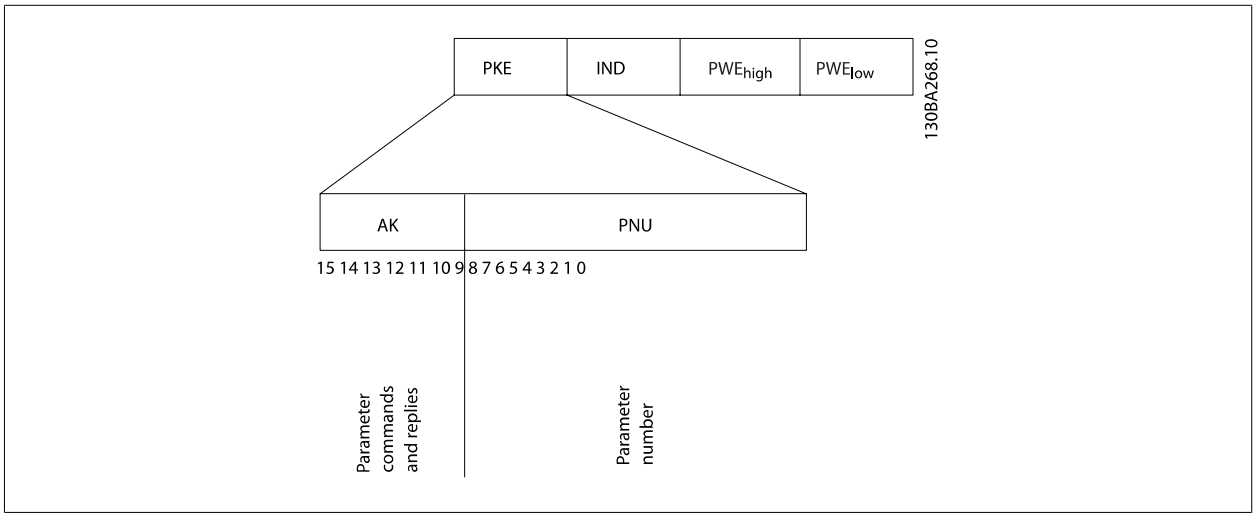

Bits no. 12-15 transfer parameter commands from master to slave and return processed slave responses to the master.

Parameter commands master ⇒ slave

Bit no.				Parameter command
15	14	13	12	
0	0	0	0	No command
0	0	0	1	Read parameter value
0	0	1	0	Write parameter value in RAM (word)
0	0	1	1	Write parameter value in RAM (double word)
1	1	0	1	Write parameter value in RAM and EEPROM (double word)
1	1	1	0	Write parameter value in RAM and EEPROM (word)
1	1	1	1	Read/write text

Response slave ⇒master

Bit no.				Response
15	14	13	12	
0	0	0	0	No response
0	0	0	1	Parameter value transferred (word)
0	0	1	0	Parameter value transferred (double word)
0	1	1	1	Command cannot be performed
1	1	1	1	text transferred

If the command cannot be performed, the slave sends this response:

0111 Command cannot be performed

- and issues the following fault report in the parameter value (PWE):

PWE low (Hex)	Fault Report
0	The parameter number used does not exit.
1	There is no write access to the defined parameter.
2	Data value exceeds the parameter's limits.
3	The sub index used does not exit.
4	The parameter is not the array type.
5	The data type does not match the defined parameter.
11	Data change in the defined parameter is not possible in the adjustable frequency drive's present mode. Certain parameters can only be changed when the motor is turned off.
82	There is no bus access to the defined parameter.
83	Data change is not possible because the factory set-up is selected.

7.4.8 Parameter Number (PNU)

Bits no. 0-11 transfer parameter numbers. The function of the relevant parameter is defined in the parameter description in the Programming Guide.

7.4.9 Index (IND)

The index is used together with the parameter number to read/write-access parameters with an index, e.g., par. 15-30 *Fault Log: Error Code*. The index consists of 2 bytes, a low byte and a high byte.

Only the low byte is used as an index.

7.4.10 Parameter Value (PWE)

The parameter value block consists of 2 words (4 bytes), and the value depends on the defined command (AK). The master prompts for a parameter value when the PWE block contains no value. To change a parameter value (write), write the new value in the PWE block and send from the master to the slave.

When a slave responds to a parameter request (read command), the present parameter value in the PWE block is transferred and returned to the master. If a parameter contains not a numerical value but several data options, e.g., par. 0-01 *Language* where [0] corresponds to English, and [4] corresponds to Danish, select the data value by entering the value in the PWE block. See Example - Selecting a data value. Serial communication is only capable of reading parameters containing data type 9 (text string).

Par. 15-40 *FC Type* to par. 15-53 *Power Card Serial Number* contain data type 9.
For example, read the unit size and AC line voltage range in par. 15-40 *FC Type*. When a text string is transferred (read), the length of the message is variable, and the texts are of different lengths. The message length is defined in the second byte of the message, LGE. When using text transfer the index character indicates whether it is a read or a write command.

To read a text via the PWE block, set the parameter command (AK) to 'F' Hex. The index character high-byte must be "4".

Some parameters contain text that can be written to via the serial bus. To write a text via the PWE block, set the parameter command (AK) to 'F' Hex. The index characters high-byte must be "5".

	PKE	IND	PWE high	PWE low
Read text	Fx xx	04 00		
Write text	Fx xx	05 00		

130BA275.10

7.4.11 Data Types Supported by FC 300

Unsigned means that there is no operational sign in the message.

Data types	Description
3	Integer 16
4	Integer 32
5	Unsigned 8
6	Unsigned 16
7	Unsigned 32
9	Text string
10	Byte string
13	Time difference
33	Reserved
35	Bit sequence

7.4.12 Conversion

The various attributes of each parameter are displayed in the section Factory Settings. Parameter values are transferred as whole numbers only. Conversion factors are therefore used to transfer decimals.

Par. 4-12 *Motor Speed Low Limit [Hz]* has a conversion factor of 0.1. To preset the minimum frequency to 10 Hz, transfer the value 100. A conversion factor of 0.1 means that the value transferred is multiplied by 0.1. The value 100 is thus perceived as 10.0.

Conversion table

Conversion index	Conversion factor
74	0.1
2	100
1	10
0	1
-1	0.1
-2	0.01
-3	0.001
-4	0.0001
-5	0.00001

7.4.13 Process Words (PCD)

The block of process words is divided into two blocks of 16 bits, which always occur in the defined sequence.

PCD 1	PCD 2
Control message (master⇒slave control word)	Reference value
Control message (slave ⇒master) Status word	Present output frequency

7.5 Examples

7.5.1 Writing a Parameter Value

Change par. 4-14 *Motor Speed High Limit [Hz]* to 100 Hz.
Write the data in EEPROM.

PKE = E19E Hex - Write single word in par. 4-14 *Motor Speed High Limit [Hz]*
IND = 0000 Hex
PWEHIGH = 0000 Hex
PWELOW = 03E8 Hex - Data value 1000, corresponding to 100 Hz, see Conversion.

The message will look like this:

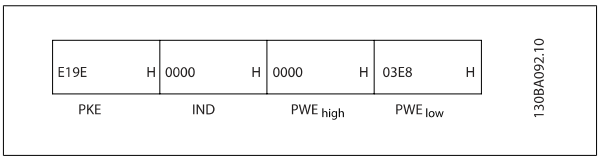

Note: Par. 4-14 *Motor Speed High Limit [Hz]* is a single word, and the parameter command for write in EEPROM is "E". Parameter number 4-14 is 19E in hexadecimal.

The response from the slave to the master will be:

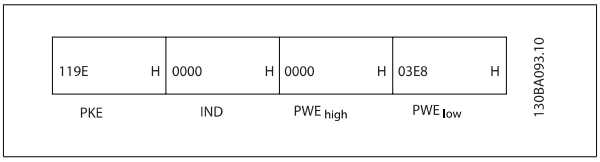

7.5.2 Reading a Parameter Value

Read the value in par. 3-41 *Ramp 1 Ramp-up Time*

PKE = 1155 Hex - Read parameter value in par. 3-41 *Ramp 1 Ramp-up Time*
IND = 0000 Hex
PWEHIGH = 0000 Hex
PWELOW = 0000 Hex

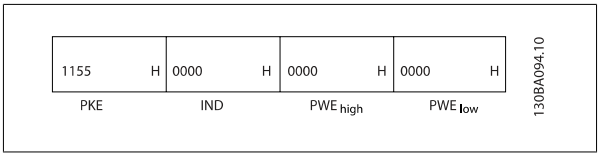

If the value in par. 3-41 *Ramp 1 Ramp-up Time* is 10 s, the response from the slave to the master will be:

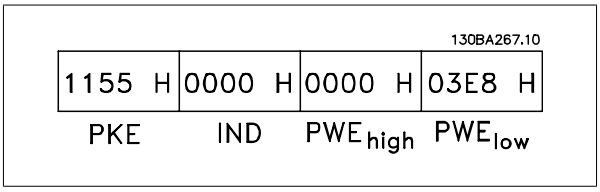

3E8 Hex corresponds to 1000 decimal. The conversion index for par. 3-41 *Ramp 1 Ramp-up Time* is -2, i.e., 0.01.
par. 3-41 *Ramp 1 Ramp-up Time* is of the type *Unsigned 32*.

7.6 How to Access Parameters

7.6.1 Parameter Handling

The PNU (Parameter Number) is translated from the register address contained in the Modbus read or write message. The parameter number is translated to Modbus as (10 x parameter number) DECIMAL.

7.6.2 Storage of Data

The Coil 65 decimal determines whether data written to the adjustable frequency drive is stored in EEPROM and RAM (coil 65 = 1), or only in RAM (coil 65 = 0).

7.6.3 IND

The array index is set in Holding Register 9 and used when accessing array parameters.

7.6.4 Text Blocks

Parameters stored as text strings are accessed in the same way as the other parameters. The maximum text block size is 20 characters. If a read request for a parameter is for more characters than the parameter stores, the response is truncated. If the read request for a parameter is fewer characters than the parameter stores, the response is space-filled.

7.6.5 Conversion Factor

The different attributes for each parameter can be seen in the section on factory settings. Since a parameter value can only be transferred as a whole number, a conversion factor must be used to transfer decimals. Please refer to the *Parameters section*.

7.6.6 Parameter Values

Standard Data Types
Standard data types are int16, int32, uint8, uint16 and uint32. They are stored as 4x registers (40001–4FFFF). The parameters are read using function 03HEX "Read Holding Registers." Parameters are written using the function 6HEX "Preset Single Register" for 1 register (16 bits), and the function 10HEX "Preset Multiple Registers" for 2 registers (32 bits). Readable sizes range from 1 register (16 bits) up to 10 registers (20 characters).

Non standard Data Types
Non standard data types are text strings stored as 4x registers (40001–4FFFF). The parameters are read using function 03HEX "Read Holding Registers" and written using function 10HEX "Preset Multiple Registers." Readable sizes range from 1 register (2 characters) up to 10 registers (20 characters).

8 General Specifications

Line power supply (L1, L2, L3):	
Supply voltage	380–480 V +5%

AC line voltage low / line drop-out:
During low AC line voltage or a line drop-out, the adjustable frequency drive continues until the intermediate circuit voltage drops below the minimum stop level, which corresponds typically to 15% below the adjustable frequency drive's lowest rated supply voltage. Power-up and full torque cannot be expected at AC line voltage lower than 10% below the adjustable frequency drive's lowest rated supply voltage.

Supply frequency	50/60 Hz ±5%
Max. imbalance temporary between line phases	3.0% of rated supply voltage
True Power Factor (λ)	> 0.98 nominal at rated load
Displacement Power Factor (cosφ) near unity	(> 0.98)
THiD	< 5%
Switching on input supply L1, L2, L3 (power-ups)	maximum once/2 min.
Environment according to EN60664-1	overvoltage category III / pollution degree 2

The unit is suitable for use on a circuit capable of delivering not more than 100,000 RMS symmetrical Amperes, 480/690 V maximum.

Motor output (U, V, W):	
Output voltage	0–100% of supply voltage
Output frequency	0–800* Hz
Switching on output	Unlimited
Ramp times	1–3600 sec.

* Voltage and power dependent

Torque characteristics:	
Starting torque (Constant torque)	maximum 110% for 1 min.*
Starting torque	maximum 135% up to 0.5 sec.*
Overload torque (Constant torque)	maximum 110% for 1 min.*

**Percentage relates to the nominal torque of the adjustable frequency drive.*

Cable lengths and cross-sections:	
Max. motor cable length, shielded/armored	492 ft [150 m]
Max. motor cable length, unshielded/unarmored	984 ft [300 m]
Max. cross-section to motor, line power, load sharing and brake *	
Maximum cross-section to control terminals, rigid wire	0.0023 in^2 [1.5 mm^2]/16 AWG (2 x 0.00112^2 in [0.75 mm^2])
Maximum cross-section to control terminals, flexible cable	0.0016 in^2 [1 mm^2]/18 AWG
Maximum cross-section to control terminals, cable with enclosed core	0.0008 in^2 [0.5 mm^2]/20 AWG
Minimum cross-section to control terminals	0.039 in^2 [0.25 mm^2]

** See Line Power Supply tables for more information!*

Digital inputs:	
Programmable digital inputs	4 (6)
Terminal number	18, 19, 27 [1)], 29 [1)], 32, 33,
Logic	PNP or NPN
Voltage level	0–24 V DC
Voltage level, logic'0' PNP	< 5 V DC
Voltage level, logic'1' PNP	> 10 V DC
Voltage level, logic '0' NPN	> 19 V DC
Voltage level, logic '1' NPN	< 14 V DC
Maximum voltage on input	28 V DC
Input resistance, R_i	approx. 4 kΩ

All digital inputs are galvanically isolated from the supply voltage (PELV) and other high-voltage terminals.

1) Terminals 27 and 29 can also be programmed as output.

Analog inputs:	
Number of analog inputs	2
Terminal number	53, 54
Modes	Voltage or current
Mode select	Switch S201 and switch S202
Voltage mode	Switch S201/switch S202 = OFF (U)
Voltage level	: 0–+10 V (scaleable)
Input resistance, R_i	approx. 10 kΩ
Max. voltage	± 20 V
Current mode	Switch S201/switch S202 = ON (I)
Current level	0/4 to 20 mA (scaleable)
Input resistance, R_i	approx. 200 Ω
Max. current	30 mA
Resolution for analog inputs	10 bit (+ sign)
Accuracy of analog inputs	Max. error 0.5% of full scale
Bandwidth	: 200 Hz

The analog inputs are galvanically isolated from the supply voltage (PELV) and other high-voltage terminals.

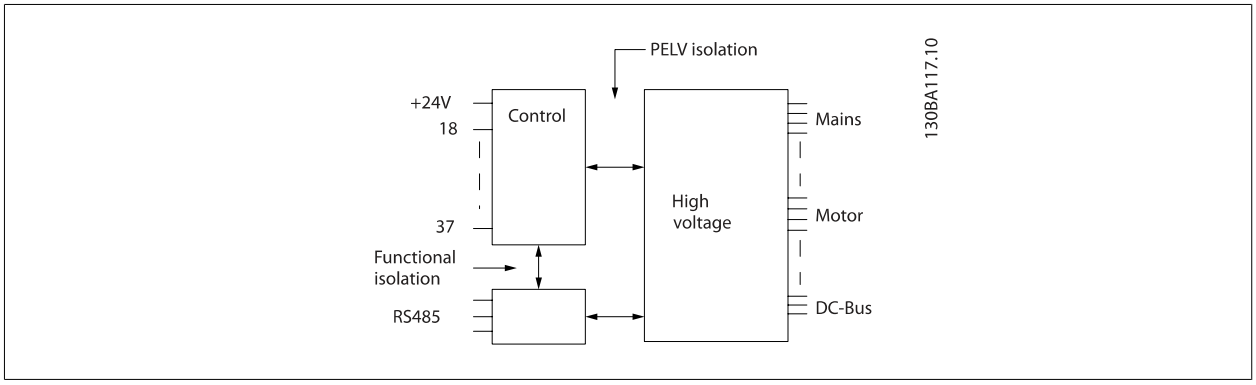

Pulse inputs:	
Programmable pulse inputs	2
Terminal number pulse	29, 33
Max. frequency at terminal, 29, 33	110 kHz (push-pull driven)
Max. frequency at terminal, 29, 33	5 kHz (open collector)
Min. frequency at terminal 29, 33	4 Hz
Voltage level	see section on Digital input
Maximum voltage on input	28 V DC
Input resistance, R_i	approx. 4 kΩ
Pulse input accuracy (0.1–1 kHz)	Max. error: 0.1% of full scale
Analog output:	
Number of programmable analog outputs	1
Terminal number	42
Current range at analog output	0/4–20 mA
Max. resistor load to common at analog output	500 Ω
Accuracy on analog output	Max. error: 0.8% of full scale
Resolution on analog output	8 bit

The analog output is galvanically isolated from the supply voltage (PELV) and other high-voltage terminals.

Control card, RS-485 serial communication:	
Terminal number	68 (P,TX+, RX+), 69 (N,TX-, RX-)
Terminal number 61	Common for terminals 68 and 69

The RS-485 serial communication circuit is functionally seated from other central circuits and galvanically isolated from the supply voltage (PELV).

Digital output:	
Programmable digital/pulse outputs	2
Terminal number	27, 29 [1)]
Voltage level at digital/frequency output	0–24 V
Max. output current (sink or source)	40 mA
Max. load at frequency output	1 kΩ
Max. capacitive load at frequency output	10 nF
Minimum output frequency at frequency output	0 Hz
Maximum output frequency at frequency output	32 kHz
Accuracy of frequency output	Max. error: 0.1% of full scale
Resolution of frequency outputs	12 bit

1) Terminal 27 and 29 can also be programmed as input.

The digital output is galvanically isolated from the supply voltage (PELV) and other high-voltage terminals.

Control card, 24 V DC output:	
Terminal number	12, 13
Max. load	: 200 mA

The 24 V DC supply is galvanically isolated from the supply voltage (PELV), but has the same potential as the analog and digital inputs and outputs.

Relay outputs:	
Programmable relay outputs	2
Relay 01 Terminal number	1-3 (break), 1-2 (make)
Max. terminal load (AC-1)[1)] on 1-3 (NC), 1-2 (NO) (Resistive load)	240 V AC, 2 A
Max. terminal load (AC-15)[1)] (Inductive load @ cosφ 0.4)	240 V AC, 0.2 A
Max. terminal load (DC-1)[1)] on 1-2 (NO), 1-3 (NC) (Resistive load)	60 V DC, 1A
Max. terminal load (DC-13)[1)] (Inductive load)	24 V DC, 0.1A
Relay 02 Terminal number	4-6 (break), 4-5 (make)
Max. terminal load (AC-1)[1)] on 4-5 (NO) (Resistive load)[2)3)]	400 V AC, 2 A
Max. terminal load (AC-15)[1)] on 4-5 (NO) (Inductive load @ cosφ 0.4)	240 V AC, 0.2 A
Max. terminal load (DC-1)[1)] on 4-5 (NO) (Resistive load)	80 V DC, 2 A
Max. terminal load (DC-13)[1)] on 4-5 (NO) (Inductive load)	24 V DC, 0.1 A
Max. terminal load (AC-1)[1)] on 4-6 (NC) (Resistive load)	240 V AC, 2 A
Max. terminal load (AC-15)[1)] on 4-6 (NC) (Inductive load @ cosφ 0.4)	240 V AC, 0.2 A
Max. terminal load (DC-1)[1)] on 4-6 (NC) (Resistive load)	50 V DC, 2 A
Max. terminal load (DC-13)[1)] on 4-6 (NC) (Inductive load)	24 V DC, 0.1 A
Min. terminal load on 1-3 (NC), 1-2 (NO), 4-6 (NC), 4-5 (NO)	24 V DC 10 mA, 24 V AC 20 mA
Environment according to EN 60664-1	overvoltage category III/pollution degree 2

1) IEC 60947 t 4 and 5

The relay contacts are galvanically isolated from the rest of the circuit by reinforced isolation (PELV).

2) Overvoltage Category II

3) UL applications 300 V AC 2 A

Control card, 10 V DC output:	
Terminal number	50
Output voltage	10.5 V ±0.5 V
Max. load	25 mA

The 10 V DC supply is galvanically isolated from the supply voltage (PELV) and other high-voltage terminals.

Control characteristics:	
Resolution of output frequency at 0–1000 Hz	: +/- 0.003 Hz
System response time (terminals 18, 19, 27, 29, 32, 33)	: ≤ 2 ms
Speed control range (open-loop)	1:100 of synchronous speed
Speed accuracy (open-loop)	30–4000 rpm: Maximum error of ±8 rpm

All control characteristics are based on a 4-pole asynchronous motor

Surroundings:	
Enclosure, frame size D and E	IP 21, IP 54 (hybrid)
Enclosure, frame size F	IP 21, IP 54 (hybrid)
Vibration test	0.7 g
Relative humidity	5–95% (IEC 721-3-3; Class 3K3 (non-condensing) during operation
Aggressive environment (IEC 60068-2-43) H_2S test	class kD
Test method according to IEC 60068-2-43 H2S (10 days)	
Ambient temperature (at 60 AVM switching mode)	
- with derating	max. 131°F [55 °C][1)]
- with full output power, typical EFF2 motors	max. 122°F [50°C][1)]
- at full continuous FC output current	max. 113°F [45°C][1)]

1) For more information on derating see the Design Guide, section on Special Conditions.

Minimum ambient temperature during full-scale operation	32°F [0°C]
Minimum ambient temperature at reduced performance	14°F [- 10 °C]
Temperature during storage/transport	-13°–+149°/158°F [-25°–+65°/70°°C]
Maximum altitude above sea level without derating	3280 ft [1000 m]
Maximum altitude above sea level with derating	9842 ft [3000 m]

Derating for high altitude, see section on special conditions

EMC standards, Emission	EN 61800-3, EN 61000-6-3/4, EN 55011, IEC 61800-3
EMC standards, Immunity	EN 61800-3, EN 61000-6-1/2, EN 61000-4-2, EN 61000-4-3, EN 61000-4-4, EN 61000-4-5, EN 61000-4-6

See section on special conditions!

Control card performance:	
Scan interval	: 5 ms
Control card, USB serial communication:	
USB standard	1.1 (Full speed)
USB plug	USB type B "device" plug

Connection to PC is carried out via a standard host/device USB cable.
The USB connection is galvanically isolated from the supply voltage (PELV) and other high-voltage terminals.
The USB connection is not galvanically isolated from protection ground. Use only isolated laptop/PC as connection to the USB connector on the adjustable frequency drive or an isolated USB cable/drive.

Protection and Features:

- Electronic thermal motor protection against overload.
- Temperature monitoring of the heatsink ensures that the adjustable frequency drive trips if the temperature reaches a predefined level. An overload temperature cannot be reset until the temperature of the heatsink is below the values stated in the tables on the following pages (guideline - these temperatures may vary for different power sizes, frame sizes, enclosure ratings, etc.).
- The adjustable frequency drive is protected against short-circuits on motor terminals U, V, W.
- If a line phase is missing, the adjustable frequency drive trips or issues a warning (depending on the load).
- Monitoring of the intermediate circuit voltage ensures that the adjustable frequency drive trips if the intermediate circuit voltage is too low or too high.
- The adjustable frequency drive is protected against ground faults on motor terminals U, V, W.

Line Power Supply 3 x 380–480 V AC				
		P160	P200	P250
	Typical Shaft output at 400 V [kW]	160	200	250
	Typical Shaft output at 460 V [HP]	250	300	350
	Enclosure IP21	D11	D11	D11
	Enclosure IP54	D11	D11	D11
	Output current			
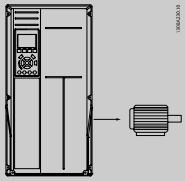	Continuous (at 400 V) [A]	315	395	480
	Intermittent (60 sec overload) (at 400 V) [A]	347	435	528
	Continuous (at 460/ 480 V) [A]	302	361	443
	Intermittent (60 sec overload) (at 460/480 V) [A]	332	397	487
	Continuous KVA (at 400 V) [KVA]	218	274	333
	Continuous KVA (at 460 V) [KVA]	241	288	353
Max. input current				
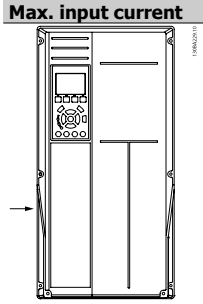	Continuous (at 400 V) [A]	304	381	463
	Continuous (at 460/ 480 V) [A]	291	348	427
	Max. cable size, line power motor, brake and load share [mm^2 (AWG[2])]	2 x 185 (2 x 300 mcm)	2 x 185 (2 x 300 mcm)	2 x 185 (2 x 300 mcm)
	Max. external pre-fuses [A] [1]	400	500	630
	Estimated motor power loss at rated max. load [W] [4], 400 V	4029	5130	5621
	Estimated motor power loss at rated max. load [W] [4], 460 V	3892	4646	5126
	Estimated filter losses, 400 V	4954	5714	6234
	Estimated filter losses, 460 V	5279	5819	6681
	Weight, enclosure IP21, IP 54 [kg]	380	380	406
	Efficiency[4]		0.96	
	Output frequency		0–800 Hz	
	Heatsink overtemp. trip	230°F [110°C]	230°F [110°C]	230°F [110°C]
	Power card ambient trip		140°F [60°C]	

8

Line Power Supply 3 x 380–480 V AC

		P315	P355	P400	P450
	Typical Shaft output at 400 V [kW]	315	355	400	450
	Typical Shaft output at 460 V [HP]	450	500	600	600
	Enclosure IP21	E7	E7	E7	E7
	EnclosureIP54	E7	E7	E7	E7
	Output current				
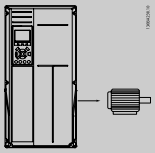	Continuous (at 400 V) [A]	600	658	745	800
	Intermittent (60 sec overload) (at 400 V) [A]	660	724	820	880
	Continuous (at 460/ 480 V) [A]	540	590	678	730
	Intermittent (60 sec overload) (at 460/480 V) [A]	594	649	746	803
	Continuous KVA (at 400 V) [KVA]	416	456	516	554
	Continuous KVA (at 460 V) [KVA]	430	470	540	582
Max. input current					
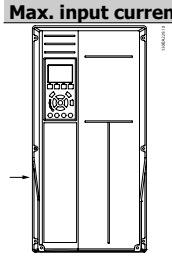	Continuous (at 400 V) [A]	590	647	733	787
	Continuous (at 460/ 480 V) [A]	531	580	667	718
	Max. cable size, line power, motor and load share [mm² (AWG[2])]	4x240 (4x500 mcm)	4x240 (4x500 mcm)	4x240 (4x500 mcm)	4x240 (4x500 mcm)
	Max. cable size, brake [mm² (AWG[2])]	2 x 185 (2 x 350 mcm)	2 x 185 (2 x 350 mcm)	2 x 185 (2 x 350 mcm)	2 x 185 (2 x 350 mcm)
	Max. external pre-fuses [A] [1]	700	900	900	900
	Estimated motor power loss at rated max. load [W] [4], 400 V	6704	7528	8671	9469
	Estimated motor power loss at rated max. load [W] [4], 460 V	5930	6724	7820	8527
	Estimated filter losses, 400 V	6607	7049	7725	8234
	Estimated filter losses, 460 V	6670	7023	7697	8099
	Weight, enclosure IP21, IP 54 [kg]	596	623	646	646
	Efficiency[4]	0.96			
	Output frequency	0–600 Hz			
	Heatsink overtemp. trip	230°F [110°C]			
	Power card ambient trip	154.4°F [68°C]			

8

Line Power Supply 3 x 380–480 V AC					
		P500	P560	P630	P710
	Typical Shaft output at 400 V [kW]	500	560	630	710
	Typical Shaft output at 460 V [HP]	650	750	900	1000
	Enclosure IP21, 54	F17	F17	F17	F17
	Output current				
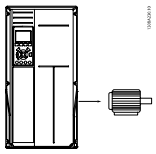	Continuous (at 400 V) [A]	880	990	1120	1260
	Intermittent (60 sec overload) (at 400 V) [A]	968	1089	1232	1386
	Continuous (at 460/ 480 V) [A]	780	890	1050	1160
	Intermittent (60 sec overload) (at 460/480 V) [A]	858	979	1155	1276
	Continuous KVA (at 400 V) [KVA]	610	686	776	873
	Continuous KVA (at 460 V) [KVA]	621	709	837	924
Max. input current					
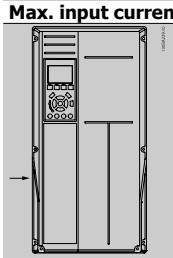	Continuous (at 400 V) [A]	857	964	1090	1227
	Continuous (at 460/480 V) [A]	759	867	1022	1129
	Max. cable size,motor [mm^2 (AWG$^{2)}$)]	8x150 (8x300 mcm)			
	Max. cable size, line power F1/F2 [mm^2 (AWG$^{2)}$)]	8x240 (8x500 mcm)			
	Max. cable size, line power F3/F4 [mm^2 (AWG$^{2)}$)]	8x456 (8x900 mcm)			
	Max. cable size, load sharing [mm2 (AWG$^{2)}$)]	4x120 (4x250 mcm)			
	Max. cable size, brake [mm^2 (AWG$^{2)}$)]	4x185 (4x350 mcm)			
	Max. external pre-fuses [A] [1]	1600		2000	
	Est. motor power loss at rated max. load [W][4)], 400 V, F1 & F2	10647	12338	13201	15436
	Est. motor power loss at rated max. load [W] [4)], 460 V, F1 & F2	9414	11006	12353	14041
	Max. added losses of A1 RFI, Circuit Breaker or Disconnect, & Contactor, F3 & F4	963	1054	1093	1230
	Max Panel Options Losses	400			
	Weight, enclosure IP21, IP 54 [kg]	2009			
	Weight Drive section [kg]	1004			
	Weight Filter section [kg]	1005			
	Efficiency[4)]	0.96			
	Output frequency	0–600 Hz			
	Heatsink overtemp. trip	203°F [95°C]			
	Power card ambient trip	154.4°F [68°C]			

1) For type of fuse, see the section Fuses.

2) American Wire Gauge.

3) Measured using 16.4 ft [5 m] shielded motor cables at rated load and rated frequency.

4) The typical power loss is at nominal load conditions and expected to be within +/-15% (tolerance relates to variety in voltage and cable conditions). Values are based on a typical motor efficiency (eff2/eff3 border line). Motors with lower efficiency will also add to the power loss in the adjustable frequency drive and opposite. If the switching frequency is increased compared to the default setting, the power losses may rise significantly.LCP and typical control card power consumptions are included. Further options and customer load may add up to 30 W to the losses. (Though typical, only 4 W extra for a fully loaded control card, or options for slot A or slot B, each.)
Although measurements are made with state of the art equipment, some measurement inaccuracy must be allowed for (+/-5%).

8.2 Filter Specifications

Frame size	D	E	F	
Voltage [V]	380 - 480	380 - 480	380 - 480	
Current, RMS [A]	120	210	330	Nominal value
Peak Current [A]	340	595	935	Amplitude value of the current
RMS overload [%]		No Overload		60 seconds in 10 min
Response time [ms]		< 0.5		
Settling time - reactive current control [ms]		< 40		
Settling time - harmonic current control (filtering) [ms]		< 20		
Overshoot - reactive current control [%]		< 20		
Overshoot - harmonic current control [%]		< 10		

Table 8.1: Power Ranges (LHD with AF)

9 Troubleshooting

9.1 Alarms and Warnings - Adjustable Frequency Drive (right LCP)

A warning or an alarm is signaled by the relevant LED on the front of the adjustable frequency drive and indicated by a code on the display.

A warning remains active until its cause is no longer present. Under certain circumstances operation of the motor may still be continued. Warning messages may be critical, but are not necessarily so.

In the event of an alarm, the adjustable frequency drive will have tripped. Alarms must be reset to restart operation once their cause has been rectified.

This may be done in four ways:

1. By using the [RESET] control button on the LCP control panel.
2. Via a digital input with the "Reset" function.
3. Via serial communication/optional serial communication bus.
4. By resetting automatically using the [Auto Reset] function, which is a default setting for VLT AQUA Drive, see par. 14-20 *Reset Mode* in **VLT AQUA Drive Programming Guide**

NOTE!
After a manual reset using the [RESET] button on the LCP, the [AUTO ON] or [HAND ON] button must be pressed to restart the motor.

If an alarm cannot be reset, the reason may be that its cause has not been rectified, or the alarm is trip-locked (see also table on following page).

Alarms that are trip-locked offer additional protection, means that the line power supply must be switched off before the alarm can be reset. After being switched back on, the adjustable frequency drive is no longer blocked and may be reset as described above, once the cause has been rectified.

Alarms that are not trip-locked can also be reset using the automatic reset function in par. 14-20 *Reset Mode* (Warning: automatic wake-up is possible!)

If a warning and alarm is marked against a code in the table on the following page, this means that either a warning occurs before an alarm, or it can be specified whether it is a warning or an alarm that is to be displayed for a given fault.

This is possible, for instance, in par. 1-90 *Motor Thermal Protection*. After an alarm or trip, the motor carries on coasting, and the alarm and warning flash on the adjustable frequency drive. Once the problem has been rectified, only the alarm continues flashing.

No.	Description	Warning	Alarm/Trip	Alarm/Trip Lock	Parameter Reference
1	10 Volts low	X			
2	Live zero error	(X)	(X)		6-01
3	No motor	(X)			1-80
4	Line phase loss	(X)	(X)	(X)	14-12
5	DC link voltage high	X			
6	DC link voltage low	X			
7	DC overvolt	X	X		
8	DC undervolt	X	X		
9	Inverter overloaded	X	X		
10	Motor ETR overtemperature	(X)	(X)		1-90
11	Motor thermistor overtemperature	(X)	(X)		1-90
12	Torque limit	X	X		
13	Overcurrent	X	X	X	
14	Ground fault	X	X	X	
15	Hardware mismatch		X	X	
16	Short Circuit		X	X	
17	Control word timeout	(X)	(X)		8-04
23	Internal Fan Fault	X			
24	External Fan Fault	X			14-53
25	Brake resistor short-circuited	X			
26	Brake resistor power limit	(X)	(X)		2-13
27	Brake chopper short-circuited	X	X		
28	Brake check	(X)	(X)		2-15
29	Drive overtemperature	X	X	X	
30	Motor phase U missing	(X)	(X)	(X)	4-58
31	Motor phase V missing	(X)	(X)	(X)	4-58
32	Motor phase W missing	(X)	(X)	(X)	4-58
33	Soft-charge fault		X	X	
34	Serial communication fault	X	X		
35	Out of frequency ranges	X	X		
36	Line failure	X	X		
37	Phase Imbalance	X	X		
39	Heatsink sensor		X	X	
40	Overload of Digital Output Terminal 27	(X)			5-00, 5-01
41	Overload of Digital Output Terminal 29	(X)			5-00, 5-02
42	Overload of Digital Output On X30/6	(X)			5-32
42	Overload of Digital Output On X30/7	(X)			5-33
46	Pwr. card supply		X	X	
47	24 V supply low	X	X	X	
48	1.8 V supply low		X	X	
49	Speed limit	X			
50	AMA calibration failed		X		
51	AMA check U_{nom} and I_{nom}		X		
52	AMA low I_{nom}		X		
53	AMA motor too big		X		
54	AMA motor too small		X		
55	AMA parameter out of range		X		
56	AMA interrupted by user		X		
57	AMA timeout		X		
58	AMA internal fault	X	X		
59	Current limit	X			
60	External Interlock	X			
62	Output Frequency at Maximum Limit	X			
64	Voltage Limit	X			
65	Control Board Overtemperature	X	X	X	
66	Heatsink Temperature Low	X			
67	Option Configuration has Changed		X		
68	Safe Stop Activated		X[1)]		
69	Pwr. Card Temp		X	X	
70	Illegal FC configuration			X	
71	PTC 1 Safe Stop	X	X[1)]		
72	Dangerous Failure			X[1)]	
73	Safe Stop Auto Restart				
76	Power Unit Set-up	X			
79	Illegal PS config		X	X	
80	Drive Initialized to Default Value		X		
91	Analog input 54 wrong settings			X	
92	NoFlow	X	X		22-2*
93	Dry Pump	X	X		22-2*
94	End of Curve	X	X		22-5*
95	Broken Belt	X	X		22-6*
96	Start Delayed	X			22-7*
97	Stop Delayed	X			22-7*
98	Clock Fault	X			0-7*

Table 9.1: Alarm/Warning code list

No.	Description	Warning	Alarm/Trip	Alarm/Trip Lock	Parameter Reference
220	Overload Trip		X		
243	Brake IGBT	X	X		
244	Heatsink temp	X	X	X	
245	Heatsink sensor		X	X	
246	Pwr.card supply		X	X	
247	Pwr.card temp		X	X	
248	Illegal PS config		X	X	
250	New spare part			X	
251	New Type Code		X	X	

Table 9.2: Alarm/Warning code list

(X) Dependent on parameter

1) Cannot be auto reset via par. 14-20 *Reset Mode*

A trip is the action when an alarm has appeared. The trip will coast the motor and can be reset by pressing the reset button or make a reset by a digital input (Par. 5-1* [1]). The original event that caused an alarm cannot damage the adjustable frequency drive or cause dangerous conditions. A trip lock is an action that occurs in conjunction with an alarm, which may cause damage to the adjustable frequency drive or connected parts. A trip lock situation can only be reset by power cycling.

LED indication

Warning	yellow
Alarm	flashing red
Trip locked	yellow and red

Alarm Word and Extended Status Word

Bit	Hex	Dec	Alarm Word	Warning Word	Extended Status Word
0	00000001	1	Brake Check	Brake Check	Ramping
1	00000002	2	Pwr. Card Temp	Pwr. Card Temp	AMA Running
2	00000004	4	Ground Fault	Ground Fault	Start CW/CCW
3	00000008	8	Ctrl.Card Temp	Ctrl.Card Temp	Slow Down
4	00000010	16	Ctrl. Word TO	Ctrl. Word TO	Catch Up
5	00000020	32	Overcurrent	Overcurrent	Feedback High
6	00000040	64	Torque Limit	Torque Limit	Feedback Low
7	00000080	128	Motor Th Over	Motor Th Over	Output Current High
8	00000100	256	Motor ETR Over	Motor ETR Over	Output Current Low
9	00000200	512	Inverter Overld.	Inverter Overld.	Output Freq High
10	00000400	1024	DC undervolt	DC undervolt	Output Freq Low
11	00000800	2048	DC overvolt	DC overvolt	Brake Check OK
12	00001000	4096	Short Circuit	DC Voltage Low	Braking Max
13	00002000	8192	Soft-charge Fault	DC Voltage High	Braking
14	00004000	16384	Line ph. Loss	Line ph. Loss	Out of Speed Range
15	00008000	32768	AMA Not OK	No Motor	OVC Active
16	00010000	65536	Live Zero Error	Live Zero Error	
17	00020000	131072	Internal Fault	10 V Low	
18	00040000	262144	Brake Overload	Brake Overload	
19	00080000	524288	U phase Loss	Brake Resistor	
20	00100000	1048576	V phase Loss	Brake IGBT	
21	00200000	2097152	W phase Loss	Speed Limit	
22	00400000	4194304	Serial Communication Fault	Serial Communication Fault	
23	00800000	8388608	24 V Supply Low	24V Supply Low	
24	01000000	16777216	Line Failure	Line Failure	
25	02000000	33554432	1.8 V Supply Low	Current Limit	
26	04000000	67108864	Brake Resistor	Low Temp	
27	08000000	134217728	Brake IGBT	Voltage Limit	
28	10000000	268435456	Option Change	Unused	
29	20000000	536870912	Drive Initialized	Unused	
30	40000000	1073741824	Safe Stop	Unused	

Table 9.3: Description of Alarm Word, Warning Word and Extended Status Word

The alarm words, warning words and extended status words can be read out via serial bus or optional serial communication bus for diagnosis. See also par. 16-90 *Alarm Word*, par. 16-92 *Warning Word* and par. 16-94 *Ext. Status Word*.

9.1.1 Fault messages

WARNING 1, 10 volts low

The control card voltage is below 10 V from terminal 50.

Remove some of the load from terminal 50, as the 10 V supply is overloaded. Max. 15 mA or minimum 590 Ω.

This condition can be caused by a short in a connected potentiometer or improper wiring of the potentiometer.

Troubleshooting: Remove the wiring from terminal 50. If the warning clears, the problem is with the customer wiring. If the warning does not clear, replace the control card.

WARNING/ALARM 2, Live zero error

This warning or alarm will only appear if programmed by the user in parameter 6-01, Live Zero Timeout Function. The signal on one of the analog inputs is less than 50% of the minimum value programmed for that input. This condition can be caused by broken wiring or faulty device sending the signal.

Troubleshooting:

Check connections on all the analog input terminals. Control card terminals 53 and 54 for signals, terminal 55 common. MCB 101 terminals 11 and 12 for signals, terminal 10 common. MCB 109 terminals 1, 3, 5 for signals, terminals 2, 4, 6 common).

Make sure that the drive programming and switch settings match the analog signal type.

Perform Input Terminal Signal Test.

9

WARNING/ALARM 3, No motor

No motor has been connected to the output of the adjustable frequency drive. This warning or alarm will only appear if programmed by the user in parameter 1-80, Function at Stop.

Troubleshooting: Check the connection between the drive and the motor.

WARNING/ALARM 4, Mains phase loss

A phase is missing on the supply side, or the line voltage imbalance is too high. This message also appears for a fault in the input rectifier on the adjustable frequency drive. Options are programmed at parameter 14-12, Function at Mains Imbalance

Troubleshooting: Check the supply voltage and supply currents to the adjustable frequency drive.

WARNING 5, DC link voltage high

The intermediate circuit voltage (DC) is higher than the high voltage warning limit. The limit is dependent on the drive voltage rating. The adjustable frequency drive is still active.

WARNING 6, DC link voltage low

The intermediate circuit voltage (DC) is lower than the low voltage warning limit. The limit is dependent on the drive voltage rating. The adjustable frequency drive is still active.

WARNING/ALARM 7, DC overvoltage

If the intermediate circuit voltage exceeds the limit, the adjustable frequency drive trips after a time.

Troubleshooting:

Connect a brake resistor

Extend the ramp time

Change the ramp type

Activate functions in par. 2-10 *Brake Function*

Increase par. 14-26 *Trip Delay at Inverter Fault*

WARNING/ALARM 8, DC undervoltage

If the intermediate circuit voltage (DC) drops below the undervoltage limit, the adjustable frequency drive checks if a 24 V backup supply is connected. If no 24 V backup supply is connected, the adjustable frequency drive trips after a fixed time delay. The time delay varies with unit size.

Troubleshooting:

Make sure that the supply voltage matches the adjustable frequency drive voltage.

Perform Input voltage test

Perform soft charge and rectifier circuit test

WARNING/ALARM 9, Inverter overloaded

The adjustable frequency drive is about to cut out because of an overload (too high current for too long). The counter for electronic, thermal inverter protection gives a warning at 98% and trips at 100%, while giving an alarm. The adjustable frequency drive *cannot* be reset until the counter is below 90%.

The fault is that the adjustable frequency drive is overloaded by more than 100% for too long.

Troubleshooting:

Compare the output current shown on the LCP keypad with the drive rated current.

Compare the output current shown on the LCP keypad with measured motor current.

Display the Thermal Drive Load on the keypad and monitor the value. When running above the drive continuous current rating, the counter should increase. When running below the drive continuous current rating, the counter should decrease.

Note: See the derating section in the Design Guide for more details if a high switching frequency is required.

WARNING/ALARM 10, Motor overload temperature

According to the electronic thermal protection (ETR), the motor is too hot. Select whether the adjustable frequency drive gives a warning or an alarm when the counter reaches 100% in par. 1-90 *Motor Thermal Protection*. The fault is that the motor is overloaded by more than 100% for too long.

Troubleshooting:

Check if the motor is overheating.

If the motor is mechanically overloaded

That the motor par. 1-24 *Motor Current* is set correctly.

Motor data in parameters 1-20 through 1-25 are set correctly.

The setting in parameter 1-91, Motor External Fan.

Run AMA in parameter 1-29.

WARNING/ALARM 11, Motor thermistor overtemp

The thermistor or the thermistor connection is disconnected. Select whether the adjustable frequency drive gives a warning or an alarm when the counter reaches 100% in par. 1-90 *Motor Thermal Protection*.

Troubleshooting:

Check if the motor is overheating.

Check if the motor is mechanically overloaded.

Check that the thermistor is connected correctly between terminal 53 or 54 (analog voltage input) and terminal 50 (+10 V supply), or between terminal 18 or 19 (digital input PNP only) and terminal 50.

If a KTY sensor is used, check for correct connection between terminal 54 and 55.

If using a thermal switch or thermistor, check the programming of parameter 1-93 matches sensor wiring.

If using a KTY sensor, check the programming of parameters 1-95, 1-96, and 1-97 match sensor wiring.

WARNING/ALARM 12, Torque limit

The torque is higher than the value in par. 4-16 *Torque Limit Motor Mode* (in motor operation) or the torque is higher than the value in par. 4-17 *Torque Limit Generator Mode* (in regenerative operation). Parameter 14-25 can be used to change this from a warning only condition to a warning followed by an alarm.

WARNING/ALARM 13, Overcurrent

The inverter peak current limit (approx. 200% of the rated current) is exceeded. The warning lasts about 1.5 sec., then the adjustable frequency drive trips and issues an alarm. If extended mechanical brake control is selected, trip can be reset externally.

Troubleshooting:

This fault may be caused by shock loading or fast acceleration with high inertia loads.

Turn off the adjustable frequency drive. Check if the motor shaft can be turned.

Make sure that the motor size matches the adjustable frequency drive.

Incorrect motor data in parameters 1-20 through 1-25.

ALARM 14, Ground fault

There is a discharge from the output phases to ground, either in the cable between the adjustable frequency drive and the motor or in the motor itself.

Troubleshooting:

Turn off the adjustable frequency drive and remove the ground fault.

Measure the resistance to ground of the motor leads and the motor with a megohmmeter to check for ground faults in the motor.

Perform current sensor test.

ALARM 15, Hardware mismatch

A fitted option is not operational with the present control board hardware or software.

Record the value of the following parameters and contact your Danfoss supplier:

15-40 FC Type

15-41 Power Section

15-42 Voltage

15-43 Software Version

15-45 Actual Typecode String

15-49 SW ID Control Card

15-50 SW ID Power Card

15-60 Option Mounted (for each option slot)

15-61 Option SW Version (for each option slot)

ALARM 16, Short circuit

There is short-circuiting in the motor or on the motor terminals.
Turn off the adjustable frequency drive and remove the short-circuit.

WARNING/ALARM 17, Control word timeout

There is no communication to the adjustable frequency drive.
The warning will only be active when par. 8-04 *Control Word Timeout Function* is NOT set to OFF.
If par. 8-04 *Control Word Timeout Function* is set to *Stop* and *Trip*, a warning appears and the adjustable frequency drive ramps down until it trips, while giving an alarm.

Troubleshooting:

Check connections on the serial communication cable.

Increase par. 8-03 *Control Word Timeout Time*

Check the operation of the communication equipment.

Verify proper installation based on EMC requirements.

WARNING 23, Internal fan fault

The fan warning function is an extra protection function that checks if the fan is running / mounted. The fan warning can be disabled in par. 14-53 *Fan Monitor* ([0] Disabled).

For the D, E, and F Frame drives, the regulated voltage to the fans is monitored.

Troubleshooting:

Check fan resistance.

Check soft charge fuses.

WARNING 24, External fan fault

The fan warning function is an extra protection function that checks if the fan is running / mounted. The fan warning can be disabled in par. 14-53 *Fan Monitor* ([0] Disabled).

For the D, E, and F Frame drives, the regulated voltage to the fans is monitored.

Troubleshooting:

Check fan resistance.

Check soft charge fuses.

WARNING 25, Brake resistor short circuit

The brake resistor is monitored during operation. If it short circuits, the brake function is disconnected and the warning appears. The adjustable frequency drive still works, but without the brake function. Turn off the adjustable frequency drive and replace the brake resistor (see par. 2-15 *Brake Check*).

WARNING/ALARM 26, Brake resistor power limit

The power transmitted to the brake resistor is calculated: as a percentage, as a mean value over the last 120 seconds, on the basis of the resistance value of the brake resistor, and the intermediate circuit voltage. The warning is active when the dissipated braking energy is higher than 90%. If *Trip* [2] has been selected in par. 2-13 *Brake Power Monitoring*, the adjustable frequency drive cuts out and issues this alarm, when the dissipated braking energy is higher than 100%.

Warning: There is a risk of substantial power being transmitted to the brake resistor if the brake transistor is short-circuited.

WARNING/ALARM 27, Brake chopper fault

The brake transistor is monitored during operation and if it short-circuits, the brake function disconnects and issues a warning. The adjustable frequency drive is still able to run, but since the brake transistor has short-circuited, substantial power is transmitted to the brake resistor, even if it is inactive.

Turn off the adjustable frequency drive and remove the brake resistor.

This alarm/ warning could also occur should the brake resistor overheat. Terminal 104 to 106 are available as brake resistor. Klixon inputs, see section Brake Resistor Temperature Switch.

WARNING/ALARM 28, Brake check failed

Brake resistor fault: the brake resistor is not connected or not working. Check parameter 2-15, Brake Check.

ALARM 29, Heatsink temp

The maximum temperature of the heatsink has been exceeded. The temperature fault will not be reset until the temperature falls below a defined heatsink temperature. The trip and reset point are different based on the drive power size.

Troubleshooting:

Ambient temperature too high.

Too long motor cable.

Incorrect clearance above and below the drive.

Dirty heatsink.

Blocked air flow around the drive.

Damaged heatsink fan.

For the D, E, and F Frame Drives, this alarm is based on the temperature measured by the heatsink sensor mounted inside the IGBT modules. For the F Frame drives, this alarm can also be caused by the thermal sensor in the Rectifier module.

Troubleshooting:

Check fan resistance.

Check soft charge fuses.

IGBT thermal sensor.

ALARM 30, Motor phase U missing

Motor phase U between the adjustable frequency drive and the motor is missing.

Turn off the adjustable frequency drive and check motor phase U.

ALARM 31, Motor phase V missing

Motor phase V between the adjustable frequency drive and the motor is missing.

Turn off the adjustable frequency drive and check motor phase V.

ALARM 32, Motor phase W missing

Motor phase W between the adjustable frequency drive and the motor is missing.

Turn off the adjustable frequency drive and check motor phase W.

ALARM 33, Inrush fault

Too many power-ups have occurred within a short time period. Let unit cool to operating temperature.

WARNING/ALARM 34, Fieldbus communication fault

The fieldbus on the communication option card is not working.

WARNING/ALARM 35, Out of frequency range:

This warning is active if the output frequency has reached the high limit (set in parameter 4-53) or low limit (set in parameter 4-52). In *Process Control, Closed-loop* (parameter 1-00), this warning is displayed.

WARNING/ALARM 36, Mains failure

This warning/alarm is only active if the supply voltage to the adjustable frequency drive is lost and par. 14-10 *Mains Failure* is NOT set to OFF. Check the fuses to the adjustable frequency drive.

ALARM 38, Internal fault

It may be necessary to contact your Danfoss supplier. Some typical alarm messages:

0	Serial port cannot be initialized. Serious hardware failure
256-258	Power EEPROM data is defect or too old
512	Control board EEPROM data is defect or too old
513	Communication time out reading EEPROM data
514	Communication time out reading EEPROM data
515	Application Orientated Control cannot recognize the EEPROM data
516	Cannot write to the EEPROM because a write command is on progress
517	Write command is under time out
518	Failure in the EEPROM
519	Missing or invalid Barcode data in EEPROM
783	Parameter value outside of min/max limits
1024-1279	A CAN message that has to be sent, couldn't be sent
1281	Digital Signal Processor flash timeout
1282	Power micro software version mismatch
1283	Power EEPROM data version mismatch
1284	Cannot read Digital Signal Processor software version
1299	Option SW in slot A is too old
1300	Option SW in slot B is too old
1301	Option SW in slot C0 is too old
1302	Option SW in slot C1 is too old
1315	Option SW in slot A is not supported (not allowed)
1316	Option SW in slot B is not supported (not allowed)
1317	Option SW in slot C0 is not supported (not allowed)
1318	Option SW in slot C1 is not supported (not allowed)
1379	Option A did not respond when calculating Platform Version.
1380	Option B did not respond when calculating Platform Version.
1381	Option C0 did not respond when calculating Platform Version.
1382	Option C1 did not respond when calculating Platform Version.
1536	An exception in the Application Orientated Control is registered. Debug information written in LCP
1792	DSP watchdog is active. Debugging of power part data Motor Orientated Control data not transferred correctly
2049	Power data restarted
2064-2072	H081x: option in slot x has restarted
2080-2088	H082x: option in slot x has issued a power-up wait
2096-2104	H083x: option in slot x has issued a legal power-up wait
2304	Could not read any data from power EEPROM
2305	Missing SW version from power unit
2314	Missing power unit data from power unit
2315	Missing SW version from power unit
2316	Missing io_statepage from power unit
2324	Power card configuration is determined to be incorrect at power-up
2325	A power card has stopped communicating while main power is applied
2326	Power card configuration is determined to be incorrect after the delay for power cards to register
2327	Too many power card locations have been registered as present
2330	Power size information between the power cards does not match
2561	No communication from DSP to ATACD
2562	No communication from ATACD to DSP (state running)
2816	Stack overflow Control board module
2817	Scheduler slow tasks
2818	Fast tasks
2819	Parameter thread
2820	LCP Stack overflow
2821	Serial port overflow
2822	USB port overflow
2836	cfListMempool to small
3072-5122	Parameter value is outside its limits
5123	Option in slot A: Hardware incompatible with Control board hardware
5124	Option in slot B: Hardware incompatible with Control board hardware
5125	Option in slot C0: Hardware incompatible with Control board hardware
5126	Option in slot C1: Hardware incompatible with Control board hardware
5376-6231	Out of memory

ALARM 39, Heatsink sensor

No feedback from the heatsink temperature sensor.

The signal from the IGBT thermal sensor is not available on the power card. The problem could be on the power card, on the gate drive card, or the ribbon cable between the power card and gate drive card.

WARNING 40, Overload of Digital Output Terminal 27

Check the load connected to terminal 27 or remove short-circuit connection. Check par. 5-00 *Digital I/O Mode* and par. 5-01 *Terminal 27 Mode*.

WARNING 41, Overload of Digital Output Terminal 29

Check the load connected to terminal 29 or remove short-circuit connection. Check par. 5-00 *Digital I/O Mode* and par. 5-02 *Terminal 29 Mode*.

WARNING 42, Overload of Digital Output on X30/6 or Overload of Digital Output on X30/7

For X30/6, check the load connected to X30/6 or remove short-circuit connection. Check par. 5-32 *Term X30/6 Digi Out (MCB 101)*.

For X30/7, check the load connected to X30/7 or remove short-circuit connection. Check par. 5-33 *Term X30/7 Digi Out (MCB 101)*.

ALARM 46, Power card supply

The supply on the power card is out of range.

There are three power supplies generated by the switch mode power supply (SMPS) on the power card: 24 V, 5 V, +/-18 V. When powered with 24 VDC with the MCB 107 option, only the 24 V and 5 V supplies are monitored. When powered with three-phase AC line voltage, all three supplied are monitored.

WARNING 47, 24 V supply low

The 24 VDC is measured on the control card. The external 24 VDC backup power supply may be overloaded, otherwise contact your Danfoss supplier.

WARNING 48, 1.8 V supply low

The 1.8 Volt DC supply used on the control card is outside of allowable limits. The power supply is measured on the control card.

WARNING 49, Speed limit

The speed is not within the specified range in par. 4-11 *Motor Speed Low Limit [RPM]* and par. 4-13 *Motor Speed High Limit [RPM]*.

ALARM 50, AMA calibration failed

Contact your Danfoss supplier.

ALARM 51, AMA check Unom and Inom

The setting of the motor voltage, motor current, and motor power is presumably wrong. Check the settings.

ALARM 52, AMA low Inom

The motor current is too low. Check the settings.

ALARM 53, AMA big motor
The motor is too big for the AMA to be carried out.

ALARM 54, AMA small motor
The motor is too big for the AMA to be carried out.

ALARM 55, AMA parameter out of range
The parameter values found from the motor are outside acceptable range.

ALARM 56, AMA interrupted by user
The AMA has been interrupted by the user.

ALARM 57, AMA timeout
Try to start the AMA again a number of times, until the AMA is carried out. Please note that repeated runs may heat the motor to a level where the resistances Rs and Rr are increased. In most cases, however, this is not critical.

ALARM 58, AMA internal fault
Contact your Danfoss supplier.

WARNING 59, Current limit
The current is higher than the value in par. 4-18, *Current Limit*.

WARNING 60, External interlock
External interlock has been activated. To resume normal operation, apply 24 VDC to the terminal programmed for external interlock and reset the adjustable frequency drive (via serial communication, digital I/O, or by pressing reset button on keypad).

WARNING 61, Tracking error
An error has been detected between the calculated motor speed and the speed measurement from the feedback device. The function for Warning/Alarm/Disable is set in par 4-30, *Motor Feedback Loss Function*, error setting in par 4-31, *Motor Feedback Speed Error*, and the allowed error time in par 4-32, *Motor Feedback Loss Timeout*. During a commissioning procedure the function may be effective.

WARNING 62, Output frequency at maximum limit
The output frequency is higher than the value set in par. 4-19 *Max Output Frequency*

WARNING 64, Voltage limit
The load and speed combination demands a motor voltage higher than the actual DC link voltage.

WARNING/ALARM/TRIP 65, Control card overtemperature
Control card overtemperature: The cutout temperature of the control card is 176°F [80°C].

WARNING 66, Heatsink temperature low
This warning is based on the temperature sensor in the IGBT module.

Troubleshooting:

The heatsink temperature measured as 32°F [0°C] could indicate that the temperature sensor is defective causing the fan speed to increase to the maximum. If the sensor wire between the IGBT and the gate drive card is disconnected, this warning would result. Also, check the IGBT thermal sensor.

ALARM 67, Option module configuration has changed
One or more options have either been added or removed since the last power-down.

ALARM 68, Safe stop activated
Safe stop has been activated. To resume normal operation, apply 24 VDC to terminal 37, then send a reset signal (via Bus, Digital I/O, or by pressing the reset key. See parameter 5-19, Terminal 37 Safe Stop.

ALARM 69, Power card temperature
The temperature sensor on the power card is either too hot or too cold.

Troubleshooting:

Check the operation of the door fans.

Make sure that the filters for the door fans are not blocked.

Check that the connector plate is properly installed on IP 21 and IP 54 (NEMA 1 and NEMA 12) drives.

ALARM 70, Illegal FC Configuration
The current control board and power board combination is illegal.

WARNING/ALARM 71, PTC 1 safe stop
Safe Stop has been activated from the MCB 112 PTC Thermistor Card (motor too warm). Normal operation can be resumed when the MCB 112 applies 24 V DC to T-37 again (when the motor temperature reaches an acceptable level) and when the digital input from the MCB 112 is deactivated. When that happens, a reset signal must be sent (via serial communication, digital I/O, or by pressing reset button on keypad). Note that if automatic restart is enabled, the motor may start when the fault is cleared.

ALARM 72, Dangerous failure
Safe stop with trip lock. Unexpected signal levels on safe stop and digital input from the MCB 112 PTC thermistor card.

Warning 73, Safe stop auto restart
Safe stopped. Note that with automatic restart enabled, the motor may start when the fault is cleared.

WARNING 76, Power Unit Set-up
The required number of power units does not match the detected number of active power units. When replacing an F frame module, this will occur if the power specific data in the module power card does not match the rest of the drive. Please confirm the spare part and its power card are the correct part number.

WARNING 77, Reduced power mode:
This warning indicates that the drive is operating in reduced power mode (i.e., less than the allowed number of inverter sections). This warning will be generated on power cycle when the drive is set to run with fewer inverters and will remain on.

ALARM 79, Illegal power section configuration
The scaling card is the incorrect part number or not installed. Also MK102 connector on the power card could not be installed.

ALARM 80, Drive initialized to default value
Parameter settings are initialized to default settings after a manual reset.

ALARM 91, Analog input 54 wrong settings
Switch S202 has to be set in position OFF (voltage input) when a KTY sensor is connected to analog input terminal 54.

ALARM 92, No-flow
A no-load situation has been detected in the system. See parameter group 22-2.

ALARM 93, Dry pump

A no-flow situation and high speed indicates that the pump has run dry. See parameter group 22-2.

ALARM 94, End of curve

Feedback stays lower than the setpoint which may indicate leakage in the pipe system. See parameter group 22-5.

ALARM 95, Broken belt

Torque is below the torque level set for no load, indicating a broken belt. See parameter group 22-6.

ALARM 96, Start delayed

Motor start has been delayed due to short-cycle protection active. See parameter group 22-7.

WARNING 97, Stop delayed

Stopping the motor has been delayed due to short cycle protection is active. See parameter group 22-7.

WARNING 98, Clock fault

Clock Fault. Time is not set or RTC clock (if mounted) has failed. See parameter group 0-7.

ALARM 243, Brake IGBT

This alarm is only for F Frame drives. It is equivalent to Alarm 27. The report value in the alarm log indicates which power module generated the alarm:

1 = left most inverter module.

2 = middle inverter module in F2 or F4 drive.

2 = right inverter module in F1 or F3 drive.

3 = right inverter module in F2 or F4 drive.

5 = rectifier module.

ALARM 244, Heatsink temperature

This alarm is only for F Frame drives. It is equivalent to Alarm 29. The report value in the alarm log indicates which power module generated the alarm:

1 = left most inverter module.

2 = middle inverter module in F2 or F4 drive.

2 = right inverter module in F1 or F3 drive.

3 = right inverter module in F2 or F4 drive.

5 = rectifier module.

ALARM 245, Heatsink sensor

This alarm is only for F Frame drives. It is equivalent to Alarm 39. The report value in the alarm log indicates which power module generated the alarm:

1 = left most inverter module.

2 = middle inverter module in F2 or F4 drive.

2 = right inverter module in F1 or F3 drive.

3 = right inverter module in F2 or F4 drive.

5 = rectifier module.

ALARM 246, Power card supply

This alarm is only for F Frame drives. It is equivalent to Alarm 46. The report value in the alarm log indicates which power module generated the alarm:

1 = left most inverter module.

2 = middle inverter module in F2 or F4 drive.

2 = right inverter module in F1 or F3 drive.

3 = right inverter module in F2 or F4 drive.

5 = rectifier module.

ALARM 247, Power card temperature

This alarm is only for F Frame drives. It is equivalent to Alarm 69. The report value in the alarm log indicates which power module generated the alarm:

1 = left most inverter module.

2 = middle inverter module in F2 or F4 drive.

2 = right inverter module in F1 or F3 drive.

3 = right inverter module in F2 or F4 drive.

5 = rectifier module.

ALARM 248, Illegal power section configuration

This alarm is only for F-frame drives. It is equivalent to Alarm 79. The report value in the alarm log indicates which power module generated the alarm:

1 = left most inverter module.

2 = middle inverter module in F2 or F4 drive.

2 = right inverter module in F1 or F3 drive.

3 = right inverter module in F2 or F4 drive.

5 = rectifier module.

ALARM 250, New spare part

The power or switch mode power supply has been exchanged. The adjustable frequency drive type code must be restored in the EEPROM. Select the correct type code in par. 14-23 *Typecode Setting* according to the label on the unit. Remember to select 'Save to EEPROM' to complete.

ALARM 251, New type code

The adjustable frequency drive has a new type code.

9.2 Alarms and Warnings - Filter (left LCP)

NOTE!
This sections covers warnings and alarms on the filter side LCP. For warning and alarms for the adjustable frequency drive, please see previous section.

A warning or an alarm is signaled by the relevant LED on the front of the filter and indicated by a code on the display.

A warning remains active until its cause is no longer present. Under certain circumstances, operation of the unit may still be continued. Warning messages may be critical, but are not necessarily so.

In the event of an alarm, the unit will have tripped. Alarms must be reset to restart operation once their cause has been rectified.

This may be done in four ways:

1. By using the [RESET] control button on the LCP control panel.
2. Via a digital input with the "Reset" function.
3. Via serial communication/optional serial communication bus.
4. By resetting automatically using the [Auto Reset] function. See par. 14-20 *Reset Mode* in the **VLT Active Filter AAF 005 Manual**

NOTE!
After a manual reset using the [RESET] button on the LCP, the [AUTO ON] or [HAND ON] button must be pressed to restart the unit.

If an alarm cannot be reset, the reason may be that its cause has not been rectified, or the alarm is trip-locked (see also table on following page).

Alarms that are trip-locked offer additional protection, means that the line power supply must be switched off before the alarm can be reset. After being switched back on, the unit is no longer blocked and may be reset as described above once the cause has been rectified.

Alarms that are not trip-locked can also be reset using the automatic reset function in par. 14-20 *Reset Mode* (Warning: automatic wake-up is possible!)

If a warning and alarm is marked against a code in the table on the following page, this means that either a warning occurs before an alarm, or it can be specified whether it is a warning or an alarm that is to be displayed for a given fault.

No.	Description	Warning	Alarm/Trip	Alarm/Trip Lock	Parameter Reference
1	10 Volts low	X			
2	Live zero error	(X)	(X)		6-01
4	Mains phase loss		X		
5	DC link voltage high	X			
6	DC link voltage low	X			
7	DC overvoltage	X	X		
8	DC undervoltage	X	X		
13	Overcurrent	X	X	X	
14	Ground fault	X	X	X	
15	Hardware mismatch		X	X	
16	Short Circuit		X	X	
17	Control word timeout	(X)	(X)		8-04
23	Internal Fan Fault	X			
24	External Fan Fault	X			14-53
29	Heatsink temp	X	X	X	
33	Inrush fault		X	X	
34	Fieldbus fault	X	X		
35	Option fault	X	X		
38	Internal fault				
39	Heatsink sensor		X	X	
40	Overload of Digital Output Terminal 27	(X)			5-00, 5-01
41	Overload of Digital Output Terminal 29	(X)			5-00, 5-02
42	Overload of Digital Output On X30/6	(X)			5-32
42	Overload of Digital Output On X30/7	(X)			5-33
46	Pwr. card supply		X	X	
47	24 V supply low	X	X	X	
48	1.8 V supply low		X	X	
65	Control Board Over-temperature	X	X	X	
66	Heatsink Temperature Low	X			
67	Option Configuration has Changed		X		
68	Safe Stop Activated		X[1)]		
69	Pwr. Card Temp		X	X	
70	Illegal FC configuration			X	
72	Dangerous Failure			X[1)]	
73	Safe Stop Aut Re				
76	Pwr Unit Setup	X			
79	Ill. PS config		X	X	
80	Drive Initialized to Default Value		X		
244	Heatsink temp	X	X	X	
245	Heatsink sensor		X	X	
246	Pwr.card supply		X	X	
247	Pwr.card temp		X	X	
248	Illegal PS config		X	X	
250	New spare part			X	
251	New Type Code		X	X	
300	Line Power Cont. fault			X	
301	SC Cont. Fault			X	
302	Cap. Overcurrent	X	X		
303	Cap. Ground Fault	X	X		
304	DC Overcurrent	X	X		
305	Line Power Freq. Limit		X		
306	Compensation Limit	X			
308	Resistor temp	X		X	
309	L-Pwr Grnd Fa	X	X		
311	Switch. Freq. Limit		X		
312	CT Range		X		
314	Auto CT Interrupt		X		
315	Auto CT Error		X		
316	CT Location Error		X		
317	CT Polarity Error		X		
318	CT Ratio Error		X		

Table 9.4: Alarm/Warning code list

A trip is the action when an alarm has appeared. The trip will coast the motor and can be reset by pressing the reset button or make a reset by a digital input (Par. 5-1* [1]). The original event that caused an alarm cannot damage the adjustable frequency drive or cause dangerous conditions. A trip lock is an action that occurs in conjunction with an alarm, which may cause damage to the adjustable frequency drive or connected parts. A trip lock situation can only be reset by power cycling.

LED indication

Warning	yellow
Alarm	flashing red
Trip locked	yellow and red

Alarm Word and Extended Status Word

Bit	Hex	Dec	Alarm Word	Warning Word	Extended Status Word
0	00000001	1	Line Power Cont. Fault	Reserved	Reserved
1	00000002	2	Heatsink Temp	Heatsink Temp	Auto CT Running
2	00000004	4	Ground Fault	Ground Fault	Reserved
3	00000008	8	Ctrl.Card Temp	Ctrl.Card Temp	Reserved
4	00000010	16	Ctrl. Word TO	Ctrl. Word TO	Reserved
5	00000020	32	Overcurrent	Overcurrent	Reserved
6	00000040	64	SC Cont. Fault	Reserved	Reserved
7	00000080	128	Cap. Overcurrent	Cap. Overcurrent	Reserved
8	00000100	256	Cap. Ground Fault	Cap. Ground Fault	Reserved
9	00000200	512	Inverter Overld.	Inverter Overld.	Reserved
10	00000400	1024	DC undervolt	DC undervolt	Reserved
11	00000800	2048	DC overvolt	DC overvolt	Reserved
12	00001000	4096	Short Circuit	DC Voltage Low	Reserved
13	00002000	8192	Inrush Fault	DC Voltage High	Reserved
14	00004000	16384	Mains ph. Loss	Mains ph. Loss	Reserved
15	00008000	32768	Auto CT Error	Reserved	Reserved
16	00010000	65536	Reserved	Reserved	Reserved
17	00020000	131072	Internal Fault	10V low	Password Time Lock
18	00040000	262144	DC Overcurrent	DC Overcurrent	Password Protection
19	00080000	524288	Resistor temp	Resistor temp	Reserved
20	00100000	1048576	L-Pwr Grnd Fa	L-Pwr Grnd Fa	Reserved
21	00200000	2097152	Switch. Freq. Limit	Reserved	Reserved
22	00400000	4194304	Fieldbus fault	Fieldbus Fault	Reserved
23	00800000	8388608	24 V Supply Low	24V Supply Low	Reserved
24	01000000	16777216	CT Range	Reserved	Reserved
25	02000000	33554432	1.8V supply low	Reserved	Reserved
26	04000000	67108864	Reserved	Low Temp	Reserved
27	08000000	134217728	Auto CT Interrupt	Reserved	Reserved
28	10000000	268435456	Option Change	Reserved	Reserved
29	20000000	536870912	Unit Initialized	Unit Initialized	Reserved
30	40000000	1073741824	Safe Stop	Safe Stop	Reserved
31	80000000	2147483648	Line Power Freq. Limit	Extended Status Word	Reserved

Table 9.5: Description of Alarm Word, Warning Word and Extended Status Word

The alarm words, warning words and extended status words can be read out via serial bus or optional serial communication bus for diagnosis. See also par. 16-90 *Alarm Word*, par. 16-92 *Warning Word* and par. 16-94 *Ext. Status Word*. "Reserved" means that the bit is not guaranteed to be any particular value. Reserved bits should not be used for any purpose.

9.2.1 Fault messages

WARNING 1, 10 volts low
The control card voltage is below 10 V from terminal 50.
Remove some of the load from terminal 50, as the 10 V supply is overloaded. Max. 15 mA or minimum 590 Ω.

WARNING/ALARM 2, Live zero error
The signal on terminal 53 or 54 is less than 50% of the value set in par. 6-10, 6-12, 6-20 or 6-22 respectively.

WARNING/ALARM 4, Mains phase loss
A phase is missing on the supply side, or the line voltage imbalance is too high.

WARNING 5, DC link voltage high
The intermediate circuit voltage (DC) is higher than the high voltage warning limit. The unit is still active.

WARNING 6, DC link voltage low
The intermediate circuit voltage (DC) is below the undervoltage limit of the control system. The unit is still active.

WARNING/ALARM 7, DC overvoltage
If the intermediate circuit voltage exceeds the limit, the unit trips.

WARNING/ALARM 8, DC undervoltage
If the intermediate circuit voltage (DC) drops below the undervoltage limit, the adjustable frequency drive checks if a 24 V backup supply is connected. If not, the unit trips. Make sure the AC line voltage matches the nameplate specification.

WARNING/ALARM 13, Overcurrent
the unit current limit has been exceeded.

ALARM 14, Ground fault
There is a discharge from the output phases to ground. Turn off the unit and correct the ground fault.

ALARM 15, Incomp. Hardware
A mounted option is not handled by the present control card SW/HW.

ALARM 16, Short circuit
There is a short-circuit in the output. Turn off the unit and correct the error.

WARNING/ALARM 17, Control word timeout
There is no communication to the unit.
The warning will only be active when par. 8-04 *Control Word Timeout Function* is NOT set to OFF.
Possible correction: Increase par. 8-03. Change par. 8-04

WARNING 23, Internal fan fault
Internal fans have failed due to defect hardware or fans not mounted.

WARNING 24, External fan fault
External fans have failed due to defect hardware or fans not mounted.

ALARM 29, Heatsink temp
The maximum temperature of the heatsink has been exceeded. The temperature fault will not be reset until the temperature falls below a defined heatsink temperature.

ALARM 33, Inrush fault
Check whether a 24 Volt external DC supply has been connected.

WARNING/ALARM 34, Fieldbus communication fault
The serial communication bus on the communication option card is not working.

WARNING/ALARM 35, Option Fault:
Contact your supplier.

ALARM 38, Internal fault
Contact your Danfoss supplier.

ALARM 39, Heatsink sensor
No feedback from the heatsink temperature sensor.

WARNING 40, Overload of Digital Output Terminal 27
Check the load connected to terminal 27 or remove short-circuit connection.

WARNING 41, Overload of Digital Output Terminal 29
Check the load connected to terminal 29 or remove short-circuit connection.

WARNING 42, Overload of Digital Output on X30/6 or Overload of Digital Output on X30/7
For X30/6, check the load connected to X30/6 or remove short-circuit connection.

For X30/7, check the load connected to X30/7 or remove short-circuit connection.

WARNING 43, Ext. Supply (option)
The external 24 V DC supply voltage on the option is not valid.

ALARM 46, Power card supply
The supply on the power card is out of range.

WARNING 47, 24 V supply low
Contact your Danfoss supplier.

WARNING 48, 1.8 V supply low
Contact your Danfoss supplier.

WARNING/ALARM/TRIP 65, Control card overtemperature
Control card overtemperature: The cutout temperature of the control card is 176°F [80°C].

WARNING 66, Heatsink temperature low
This warning is based on the temperature sensor in the IGBT module.

Troubleshooting:

The heatsink temperature measured as 32°F [0°C] could indicate that the temperature sensor is defective causing the fan speed to increase to the maximum. If the sensor wire between the IGBT and the gate drive card is disconnected, this warning would result. Also, check the IGBT thermal sensor.

ALARM 67, Option module configuration has changed
One or more options have either been added or removed since the last power-down.

ALARM 68, Safe stop activated

Safe stop has been activated. To resume normal operation, apply 24 VDC to terminal 37, then send a reset signal (via Bus, Digital I/O, or by pressing the reset key. See parameter 5-19, Terminal 37 Safe Stop.

ALARM 69, Power card temperature

The temperature sensor on the power card is either too hot or too cold.

ALARM 70, Illegal FC Configuration

The current control board and power board combination is illegal.

Warning 73, Safe stop auto restart

Safe stopped. Note that with automatic restart enabled, the motor may start when the fault is cleared.

WARNING 77, Reduced power mode:

This warning indicates that the drive is operating in reduced power mode (i.e., less than the allowed number of inverter sections). This warning will be generated on power cycle when the drive is set to run with fewer inverters and will remain on.

ALARM 79, Illegal power section configuration

The scaling card is the incorrect part number or not installed. Also MK102 connector on the power card could not be installed.

ALARM 80, Unit initialized to default value

Parameter settings are initialized to default settings after a manual reset.

ALARM 244, Heatsink temperature

Report value indicates source of alarm (from left):

1-4 Inverter

5-8 Rectifier

ALARM 245, Heatsink sensor

No feedback from the heatsink sensor. Report value indicates source of alarm (from left):

1-4 Inverter

5-8 Rectifier

ALARM 246, Power card supply

The supply on the power card is out of range. Report value indicates source of alarm (from left):

1-4 Inverter

5-8 Rectifier

ALARM 247, Power card temperature

Power card overtemperature. Report value indicates source of alarm (from left):

1-4 Inverter

5-8 Rectifier

ALARM 248, Illegal power section configuration

Power size configuration fault on the power card. Report value indicates source of alarm (from left):

1-4 Inverter

5-8 Rectifier

ALARM 249, Rect. low temp.

The temperature of the rectifier heatsink is too low. This could indicate that the temperature sensor is defective.

ALARM 250, New spare part

The power or switch mode power supply has been exchanged. The adjustable frequency drive type code must be restored in the EEPROM. Select the correct type code in par. 14-23 *Typecode Setting* according to the label on the unit. Remember to select 'Save to EEPROM' to complete.

ALARM 251, New type code

The adjustable frequency drive has a new type code.

ALARM 300, Line Power Cont. Fault

The feedback from the line power contactor did not match the expected value within the allowed time frame. Contact your supplier.

ALARM 301, SC Cont. Fault

The feedback from the soft charge contactor did not match the expected value within the allowed time frame. Contact your supplier.

ALARM 302, Cap. Overcurrent

Excessive current was detected through the AC capacitors. Contact your supplier.

ALARM 303, Cap. Ground Fault

A ground fault was detected through the AC capacitor currents. Contact your supplier.

ALARM 304, DC Overcurrent

Excessive current through the DC link capacitor bank was detected. Contact your supplier.

ALARM 305, Line Power Freq. Limit

The line power frequency was outside the limits. Verify that the line power frequency is within product specification.

ALARM 306, Compensation Limit

The needed compensation current exceeds unit capability. Unit is running at full compensation.

ALARM 308, Resistor temp

Excessive resistor heatsink temperature detected.

ALARM 309, Line Power Ground Fault

A ground fault was detected in the line power currents. Check the line power for shorts and leakage current.

ALARM 310, RTDC Buffer Full

Contact your supplier.

ALARM 311, Switch. Freq. Limit

The average switching frequency of the unit exceeded the limit. Verify that parameters 300-10 and 300-22 are set correctly. If so, contact your supplier.

ALARM 312, CT Range

Current transformer measurement limitation was detected. Verify that the CTs used are an appropriate ratio.

ALARM 314, Auto CT Interrupt

Auto CT detection was interrupted by the user.

ALARM 315, Auto CT Error

An error was detected while performing auto CT detection. Contact your supplier.

ALARM 316, CT Location Error

The Auto CT function could not determine the correct locations of the CTs.

ALARM 317, CT Polarity Error

The Auto CT function could not determine the correct polarity of the CTs.

ALARM 318, CT Ratio Error

The Auto CT function could not determine the correct primary rating of the CTs.

Index

2

3

A

B

C

D

E

F

G

H

I

K

L

M

N

O

P

Q

R

S

T

U

V

W