ENGINEERING
TOMORROW

MultiAxis-Steer™

EHI Electrohydraulic steering valve with PVED-CLS controller

Technical Information - user and safety manual

FW 1.00

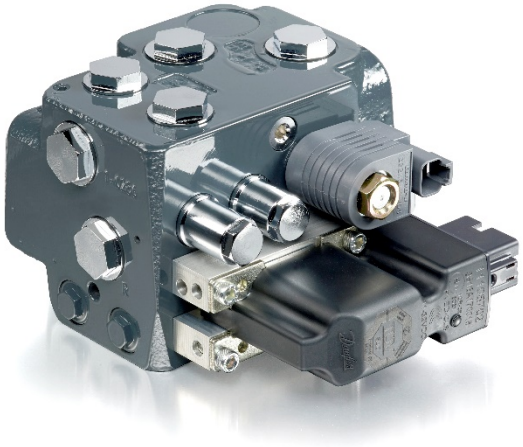

Revisions

Revision History

Table of Revisions

Date	Page	Changed	ECO No.	Rev.
04 Oct. 2019		First release: FW 1.00		0104

© 2019 Danfoss A/S. All rights reserved

All trademarks in this material are properties of their respective owners.
PLUS+1, GUIDE and Sauer-Danfoss are trademarks of Danfoss A/S.

Document references

Literature

Document	Revision
PVED-CLS MultiAxis-Steer communication protocol	Revision 1.02 29 Oct 2019
PVED-CLS KWP2000 protocol	Revision 1.79 02 May 2018
PVED-CLS Technical Specification	BC00000355
PVED-CLS User manual	Revision 1.7 14 Jan 2019
PVED-CLS MultiAxis-Steer firmware release note	1.02 29 Oct. 2019
EHi steering valve technical information	BC00000379

Software reference

This documentation is related to the following software version:
See MultiAxis-Steer firmware revision in Document references

Errata information

The latest errata information is always available on the Danfoss homepage: www.danfoss.com
It contains errata information for:

- PVED-CLS boot loader
- PVED-CLS application
- Documentation
- PLUS+1® Service tool
- Other topics related to the steering system

If further information to any errata is required, please contact your nearest Danfoss Product Application Engineer

Important User Information

Danfoss is not responsible or liable for indirect or consequential damages resulting from the use or application of this equipment.

The examples and diagrams in this manual are included for illustration purposes. Due to the many variables and requirements associated with any particular installation, Danfoss cannot assume responsibility or liability for the actual used bases on the examples and diagrams.

Reproduction of whole or part of the contents of this safety manual is prohibited.

The following notes are used to raise awareness of safety considerations.

Warning	**Identifies information about practices or circumstances that can cause a hazardous situation, which may lead to personal injury or death, damage or economic loss.**
Attention	Identifies information about practices or circumstances that can lead to personal injury or death, property damage, or economic loss. Attentions help you identify a hazard, avoid a hazard, and recognize the consequence.
Important	Identifies information that is critical for successful application and understanding of the product.
Recommendation	Identifies a typical use of a functionality or parameter value. Use recommendations as a starting point for the final configuration process of the system.

Terms and abbreviations

Abbiviation	Meaning
AgPL	Agricultural Performance Level per ISO 25119
CAT	Safety category per ISO 13849 and ISO 25119
CCF	Common Cause Failure
COV	Cut-Off Valve
DC	Diagnostic Coverage
de-power	Infers: Disconnect electrical power supply to PVED-CLS, includes the de-engergize
de-energize	Infers: Block hydraulic pilot pressure by switching off electrical power supply to EHi and cut-off valve. The PVED-CLS will remain powered on.
ECU	Electronic Control Unit
EH	Electro-Hydraulic
EHi-E	Electro-Hydraulic Inline Valve – Electronic Override
FMEA	Failure Mode and Effects Analysis
FMEDA	Failure Mode and Effects and Diagnostic Analysis
IR	Internal Resolution [-1000;1000]
MMI	Man-Machine Command Interface
MTTFd	Mean time to potentially dangerous failure
N-Axis	Multi-axis, more than one axis is steered
OEM	Original Equipment Manufacturer
OSPE	Orbital Steering Product – Electro-hydraulic
PFD	Probability of dangerous failure on Demand
PFH	Probability for dangerous failure per hour
PL	Performance level per ISO 13849
POST	Power On Self Test
PSAC	Parameter Sector Access Code
PVED-CLS	Proportional Valve Digital – Closed Loop - Safety – here the valve controller
SASA	Steering Angle Sensor Absolute
SC	Systematic capability
SEHS	Safe Electro-Hydraulic Steering
SFF	Safe Failure Fraction
SIL	Safety Integrity Level
SPN	Suspect Parameter Number
SVB	Solenoid Valve Bridge
SVC	Solenoid Valve Control – Control algorithm for PVED-CLS
VAA	Virtual Axis Angle
VAP	Virtual Axis Position
WAS	Wheel Angle Sensor

© Danfoss | Nov 2019 | 4

Contents

Document references 3
Software reference 3
Errata information 3
Important User Information 3

Terms and abbreviations 4

Contents 5

Introduction 9

N-Axis system principal 10
N-Axis system configurations 10
N-Axis master [hydrostatic] steering system 10
N-Axis master [electro hydraulic] steering system 10
N-Axis master functions 11
N-Axis slave function 11
Man Machine Interface (MMI) 11
Vehicle speed sensor 11
Wheel angle sensor 11
Road switch 12
Active de-energize (immediate) 12
Active de-energize (automatic return to straight) 12
Full electrical de-power/de-energize 12
Advise for system integrators 12
Service tool 12
N-Axis CAN network 13
CAN message data flow 13
N-Axis CAN messages 13
Operation state machine 14
States 14
Operation state machine – fault handling 17
States 17

Functional safety 18
Certification (pending) 18
System integrator responsibility 18
Safety function overview 19
Functional safety specification 20
Safe state 20
N-Axis steering operation while in safe state 20
Safe state leakage performance 20
Reset and recovery from safe state 20
Safety function response time 20
Monitoring function response time 21
N-Axis safe EH steering 22
Safe EH-steering / N-Axis closed loop cylinder position control 22
N-Axis safety related control functions 24
Safe vehicle speed dependent Virtual Axis Position (VAP) limit 24
Realizing a safe MMI interface 24
Operation 24
Parameters 25
Parameter tuning guideline 26
Operation when number of slaves > 1 26
Safe vehicle speed dependent Virtual Axis Position (VAP) change rate 27
Realizing a safe MMI interface 27
Operation 27
Parameter 28
Parameter tuning guideline 28
Operation when number of slaves > 1 29
Safe vehicle speed dependent Virtual Axis Angle (VAA) limit 30
Realizing a safe MMI interface 30

Operation ... 30
Parameter ... 31
Parameter tuning guideline ... 31
Operation when number of slaves > 1 ... 32
Safe vehicle speed dependent Virtual Axis Angle (VAA) change rate ... 32
Realizing a safe MMI interface ... 32
Operation ... 32
Parameter ... 33
Parameter tuning guideline ... 34
Operation when number of slaves > 1 ... 34
Safe vehicle speed dependent closed loop gain limitation ... 35
Realizing a safe closed-loop position control of the slave axis ... 35
Operation ... 35
Parameters ... 36
Parameter tuning guideline ... 36
Operation when number of slaves > 1 ... 37
Safe vehicle speed dependent wheel angle setpoint limitation ... 37
Realizing a safe closed-loop position control of the slave axis ... 37
Operation ... 37
Parameters ... 38
Parameter tuning guideline ... 38
Operation when number of slaves > 1 ... 39
Safe N-Axis steering angle initialization (pre-operational) ... 39
Operation ... 39
Parameters ... 39
Parameter tuning guideline ... 39
Operation when number of slaves > 1 ... 39

System Architecture **40**
System diagrams ... 40
N-Axis master [hydrostatic] ... 40
N-Axis master [electro-hydraulic] ... 40
PVED-CLS steering controller ... 40
Connector interface ... 40
Technical specification ... 40
DC Power supply ... 40
Road-switch de-power / de-energize architectures ... 41
ON/OFF switch interface - Active de-energize (immediate) ... 41
Operation ... 41
Interface ... 42
Monitoring ... 42
ON/OFF switch interface - Active de-energize (automatic return to straight) ... 44
Operation ... 44
Monitoring ... 45
ON/OFF switch interface - Full electrical de-power/de-energize ... 45
Zero-leakage valve configuration (option) ... 46
Background ... 46
Pilot operated check valves ... 46
Architecture for zero-leakage performance ... 46
Reliability block diagram ... 47
Safety requirements for additional circuitry for SIL3/PL e ... 48
Input - Sensor sub-system and monitoring ... 49
N-Axis master - CAN interface ... 49
CAN interface ... 50
Monitoring ... 50
Vehicle speed sensor – CAN interface ... 50
CAN interface ... 51
Monitoring ... 52
Man Machine Interface – CAN interface ... 52
CAN interface ... 53
Monitoring ... 54

Wheel Angle Sensor (WAS) – Analog interface ... 54
Analogue interface ... 55
Monitoring ... 55
Input range check ... 55
WAS channel cross-check ... 56
Micro-controller cross-check of scaled wheel angle ... 56
Out of calibration check ... 56
Wheel Angle Sensor (WAS) – CAN interface ... 56
CAN interface ... 57
Monitoring ... 58
Input range check ... 58
Micro-controller WAS channel cross-check ... 58
Out of calibration check ... 59
Output - Valve sub-system and monitoring ... 59
Sensor 5V DC power supply ... 59
EHi Cut-off valve ... 59
Interface ... 60
Configuration for EHi-E valve sub-systems ... 60
Monitoring for EHi-E valve sub-systems ... 61
EHi-valve monitoring ... 61
EH-valve main spool control principle ... 61
EH-valve main spool monitoring –EHi-E valve sub-systems ... 61
Environmental control measures ... 63
PCB overheating shut-down ... 63
PCB average over-temperature warning ... 63
DC power supply ... 63

System set-up **65**

Installation ... 65
PVED-CLS Connector interface ... 65
LED diagnostic ... 65
Calibration ... 65
Straight heading calibration ... 65
System integration and testing ... 65
Vehicle Fault Insertion Testing ... 66
Safety validation testing ... 66
Service part handling and repair instruction ... 66
Safety validation steps after replacing a PVED-CLS with a service part ... 66
Service Tool (detailed) ... 67

Appendix **68**

Component identification via CAN bus ... 68
Valve assembly barcode label ... 68
Bootloader and application software identification ... 68
PVED-CLS component identification and serial number ... 69
PLUS+1 Service tool identification page ... 69
J1939 request PGN for software ID and component ID ... 69
EEPROM parameters ... 70
EEPROM layout ... 70
Safety parameterization ... 71
Safety parameterization procedure ... 71
Boot Data ... 73
Sector CRC Sign Data ... 74
Hydraulic Config ... 75
Valve Calibration Data ... 78
CAN WAS Calibration Data ... 78
Analog Sensor Calibration Data ... 79
Peripherals Config ... 79
N-Axis Protocol Data ... 80
Internal Monitoring ... 82
Production/Calibration Flag ... 84
Auto Calibration Config ... 84

N-Axis 87
PLM metadata 90
OEM Data 93
Signature CRC calculation 95
Diagnostic Trouble Codes 96
Error codes 96
FMI list 102
TROUBLESHOOTING – TYPICAL FAULTS 103

Introduction

MultiAxis vehicle steering is adding steering functionality to have steering on one or more steering axis than the master axis.

Throughout this document, and in referenced documentation, N-axis or NAXIS are used as synonyms for MultiAxis steering mainly referencing one or more additional (n) "slave" axis.

Any possibly vehicle steering mode can be achieved with N-Axis steering by the N-Axis MMI command CAN message, containing the Virtual Axis Position (VAP) and the Virtual Axis Angle (VAA). See Figure 1.

The data set, given by VAP and VAA, can result in steering modes such as:

- 2-wheel steering (normal)
- Round/4-wheel steering
- Crab steering
- Dog steering
- Customized steering modes

The steering modes can be altered dynamically and seamlessly by the operator during operation by transmitting VAP and VAA data set which results in the requested steering mode.

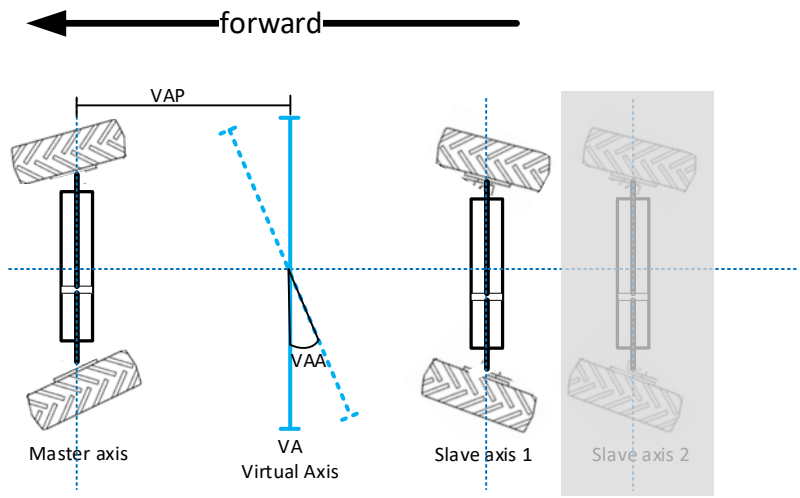

Figure 1 N-Axis steering variables VAP and VAA

The blue line is the Virtual Axis which can be shifted horizontally along the wheel base (VAP) and angled relative to the wheel base (VAA). Shifting VAP to the physical slave axis position in a single slave system will result in 2-wheel steering.

N-Axis system principal

A N-Axis slave steering sub-system may work with both a N-Axis master [hydrostatic] and N-Axis master [electro hydraulic]. The below functions shall be performed by the system components outlined in N-Axis system configurations.

N-Axis system configurations

N-Axis master [hydrostatic] steering system

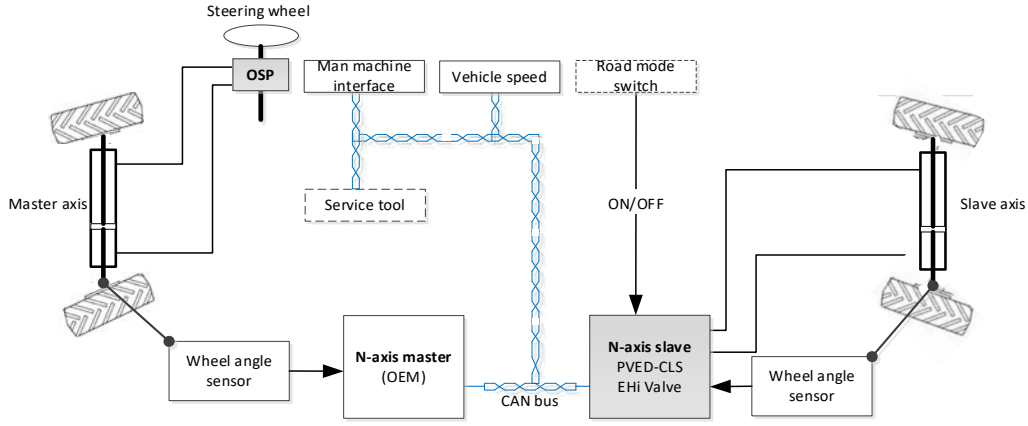

In a N-Axis master, [hydrostatic] steering sub-systems, the master axis is actuated by a hydro-static steering unit. All N-Axis master functions must be provided by the OEM controller working as N-Axis master.

N-Axis master [electro hydraulic] steering system

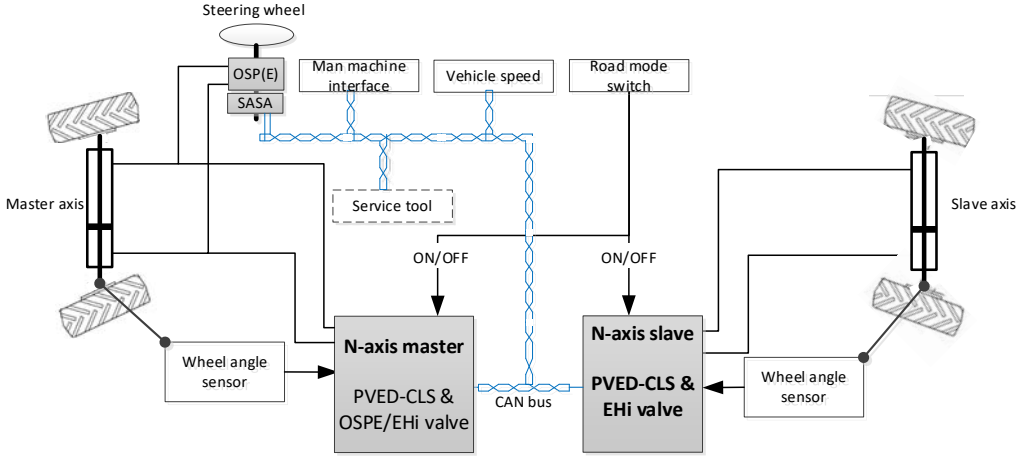

In a N-Axis master [electro hydraulic] steering system, both the master and slave axis are electro-hydraulic steering sub-systems e.g. by applying a PVED-CLS with an OSPE valve or a PVED-CLS with an OSP and EHi inline valve enabling auto-guidance or other high level steering functionalities.
Refer to [PVED-CLS User manual] for high-level electro-hydraulic steering master axis functionalites.

N-Axis master functions

An N-Axis master performs the following functions:

- Actuate the master steering axis
- Measure the master axis wheel angle and transmit it onto the CAN bus
- Transmit N-Axis master status information onto the CAN bus to the N-Axis slave

N-Axis master functionality shall be realized in the target system by the OEM or by applying a PVED-CLS in 'N-Axis master' mode (planned software extension).
Refer to [PVED-CLS MultiAxis-Steer communication protocol].

N-Axis slave function

An N-Axis slave performs the following functions:

- Actuate the slave axis
- Receive N-Axis Man Machine Interface (MMI) commands
- Measure the slave axis wheel angle
- Execute slave-to-master wheel angle alignment initialization
- Perform closed-loop steering control of the slave axis cylinder
- Inputs for closed-loop steering control are:
    - Master axis wheel angle
    - Virtual Axis Position (VAP) from MMI
    - Virtual Axis Angle (VAA) from MMI
    - Wheel angle limitations from other N-Axis slaves (n > 1)
    - Vehicle speed data
- Execute N-Axis safety related control functions
- On-road operation mode
- Apply wheel angle limitation on demand
- Apply self-centering (graceful degradation)
- Transmit N-Axis slave network status CAN message
- Auto-calibration functionality

Man Machine Interface (MMI)

The MMI performs the following functions:

- Cyclically transmission of the N-Axis MMI control message
- Control of the N-Axis steering mode set-point (VAP and VAA)
- Control of wheel angle limit on-demand

The MMI functionality shall be realized in the target system by the OEM.
Refer to [PVED-CLS MultiAxis-Steer communication protocol].

Vehicle speed sensor

The vehicle speed sensor sub-system performs the following function:

- Aqcusition and transmission of the vehicle propulsion speed onto the CAN bus

The vehicle sensor sub-system shall be shall be realized in the target system by the OEM.
Refer to [PVED-CLS MultiAxis-Steer communication protocol].

Wheel angle sensor

A wheel angle sensor shall acquire the wheel angle of the front and slave axis respectively.
The wheel angle sensor may:

- Redundant analog 0-5V with crossed output characteristic
- CAN based

The vehicle sensor sub-system shall be shall be realized in the target system by the OEM.
Refer to [PVED-CLS MultiAxis-Steer communication protocol] for CAN based wheel angle sensors.

Road switch

The road switch performs the following functions in respect to slaves axis:

- Activate N-Axis slave steering
- De-activate N-Axis slave steering

More activation/de-activation options are possible:

Active de-energize (immediate)

Disable N-Axis slave steering for reaching a safe operation mode for public road usage.
PVED-CLS will remain powered and transmit status and sensor information on the CAN bus.
See [Road-switch de-power / de-energize architectures
ON/OFF switch interface - Active de-energize (immediate)] on page 41.

Active de-energize (automatic return to straight)

Disable N-Axis slave steering with auto-centering to straight and subsequent reaching a safe operation mode for public road usage
PVED-CLS will remain powered and transmit status and sensor information on the CAN bus.
See [ON/OFF switch interface - Active de-energize (automatic return to straight)] on page 44.

Full electrical de-power/de-energize

Full electrically de-power/de-energize the N-Axis slave to assume a safe state. The PVED-CLS and valves are not powered. No slave axis functionality is available.
See [ON/OFF switch interface - Full electrical de-power/de-energize] on page 45.

Zero-leakage de-power/de-energize architecture option
Applications which require lower rear axis drift while N-Axis is inactive or de-energized, require additional zero-leakage check valves. See [Zero-leakage valve configuration (option)] on page 46.

Advise for system integrators

Important

- The road switch is optional in N-Axis steering systems.
- The OEM system integrator shall take the decision on the need for a road switch based on the hazard and risk analysis for the particular vehicle.
- Factors such as maximum vehicle speed, weights, vehicle use profiles may be part of the considerations.
- The road switch may also operate on N-axis master [electro-hydraulic] steering systems.
- See [Safe state leakage performance] on page 20 for cylinder drift during de-activation.

For systems, where a road switch is required, it must be analysed if cylinder drift, while de-energzied, is acceptable. If cylinder drift cannot be tolerated, additional check valves may be needed for zero-leakage performance.

The system integrator shall ensure that the PVED-CLS and valve sub-system are used in a suitable mode while the vehicle is being used on public roads.

Service tool

The service tool provides a mean to perform calibration and diagnostic during installation and performs the following functions:

- Configure parameter settings
- Read out error codes
- Diagnostic
- Valve spool auto-calibration
- Wheel angle sensor calibration
- Perform manual calibrations
- Program multiple parameters
- Flash firmware

N-Axis CAN network

CAN message data flow

Four levels of CAN messages are flowing in an N-Axis steering system.

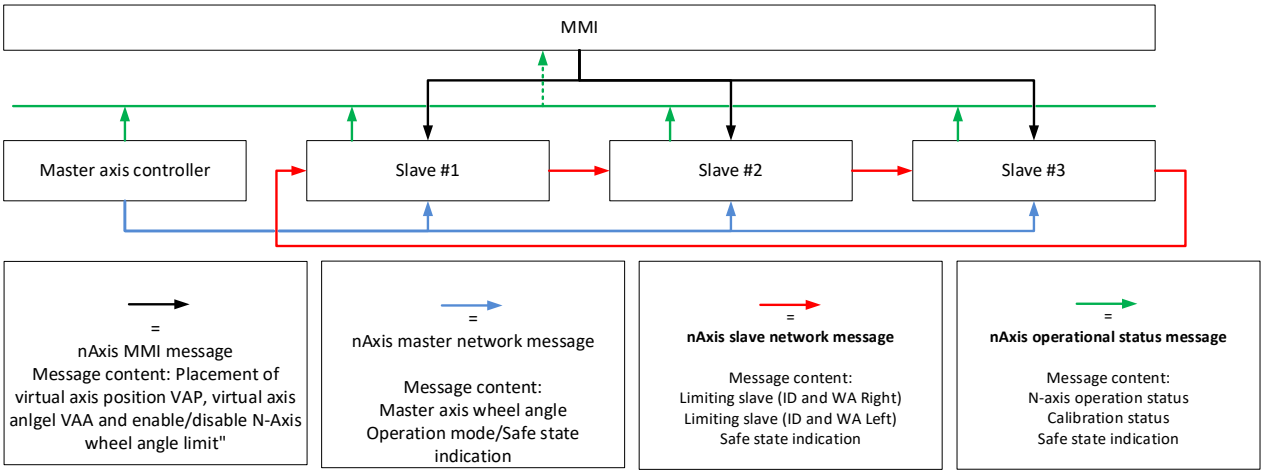

Figure 2 N-Axis CAN message network

N-Axis CAN messages

CAN message	Function description
N-Axis MMI	The MMI message contains the VAP and VAA which sets the vehicle steering mode. A pre-configured wheel angle limit can be enabled/disabled by the MMI which will take priority over other wheel angle limitations in the N-Axis. The N-Axis MMI message is only received by the N-Axis slaves (one or more). NAXIS MMI PRIMARY MESSAGE [NAXIS_MMI_P] NAXIS MMI REDUNDANT MESSAGE [NAXIS_MMI_R] Refer to [PVED-CLS MultiAxis-Steer communication protocol].
N-Axis master net work message	The N-Axis master message contains the master axis steering angle and the operation mode or safe state indication. NAXIS MASTER PRIMARY MESSAGE [NAXIS_MASTER_P] NAXIS MASTER REDUNDANT MESSAGE [NAXIS_MASTER_R] Refer to [PVED-CLS MultiAxis-Steer communication protocol].
N-Axis slave network message	The N-Axis slave network message(s) contains the identifier of the slave which has reached its wheel angle limit (R/L) and the operation mode or safe state indication from that particular N-Axis slave. Any N-Axis can at some point reach a wheel angle restriction which limits the entire N-Axis steering behavior i.e. not allowing further N-Axis steering to the direction which has reached a limit. A slave shall receive and forward the received wheel angle limit from a slave or transmit its own limit if this is the tightest wheel angle limit. Note that the N-Axis slave network messages are only sent when the number of N-Axis slaves is > 1. NAXIS WHEEL ANGLE LIMIT PRIMARY MESSAGE [NAXIS_MWA_LIMIT_P] NAXIS WHEEL ANGLE LIMIT REDUNDANT MESSAGE [NAXIS_MWA_LIMIT_R] Refer to [PVED-CLS MultiAxis-Steer communication protocol].
N-Axis master/slave operation status message	Primary and redundant master and slave(s) operation status message [STAT_MSG_OP] Operational status message from the master and the slaves. Status message on N-Axis steering mode, calibration status and safe sate indication. N-Axis operation status messages are for information only.

N-Axis operation

Operation state machine

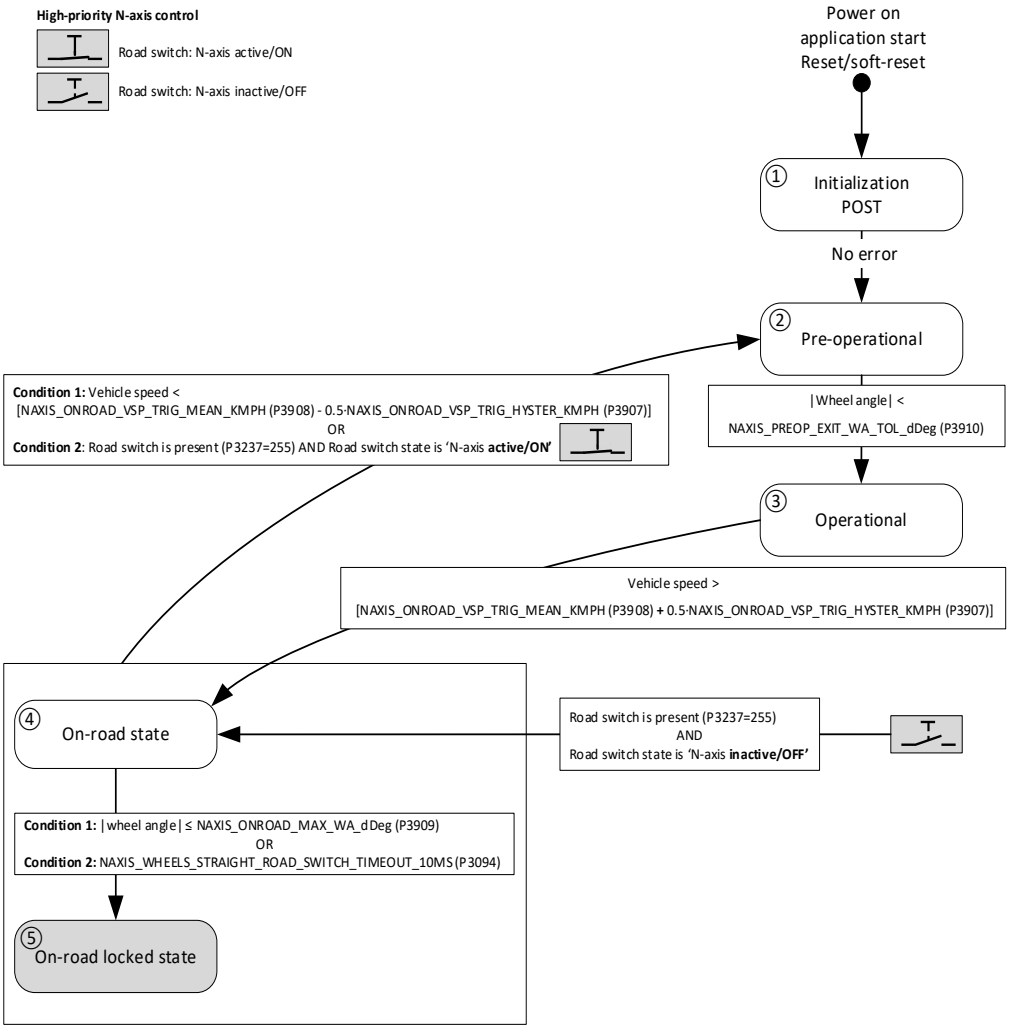

Figure 3 N-axis operation state machine

States

State	#	Description
Initialization POST	1	Power-on-self-tests are executed to ensure that the hardware, software and valves work to the specifications. If a fault is detected the PVED-CLS enters the safe state (fail state) and issue a DTC on the CAN bus. After transmitting the address claim message, the application shall wait up to 10 seconds for N-Axis slave input signals: MMI messages, vehicle speed CAN messages, analogue WAS signals, CAN based WAS signals (if configured), N-Axis master messages, N-Axis master wheel angle limit messages (when the number of slave axis > 1) and road switch signals. Monitoring is applied on each signal/message upon reception of the first valid signal or message. After a fixed 10 seconds time-out period, the software assumes that all signal and messages are present and starts individual monitoring of these. Should one or more sensors fail to be ready within 10 seconds after address claim, the application shall enter the safe state.
Pre-operational	2	Prior to executing closed-loop slave axis position control in Operation state, the slave axis angles are aligned to the master axis steering angle for the current N-Axis steering mode set-point (VAP, VAA).

State	#	Description
		The alignment is performed by letting master axis steering motion work as a gate for closed-loop position control of the N-Axis slave; the slave axis steering angle will not change position unless the master axis is changing position similar to "inching" the slave axis to the correct position. This operation is continued until the slave axis position is inside a tolerable range given by the parameter P3910. Hereafter the N-Axis resumes to operational state.
Operational	3	Active closed-loop control of the slave axis position. The control parameters shall undergo tuning to achieve a controllable steering for any N-Axis steering mode change. The input for the closed-loop control algorithm is: • Master axis wheel angle • Virtual Axis Position (VAP) from MMI • Virtual Axis Angle (VAA) from MMI • Wheel angle limitations from other N-Axis slaves (n > 1) • Vehicle speed data The closed-loop control performance is configurable by the parameters listed in [Safe vehicle speed dependent closed loop gain limitation]. Typically the closed-loop control of the slave axis is configured to approach a sole front axis steering system (VAA=0 and VAP = slave axis position) proportionally to increasing vehicle speed. The maximum vehicle speed where N-Axis operation shall revert to a sole front axis steering system is set by parameter P3908. Exceeding this speed + 0.5·P3907 (half of the vehicle speed hysteresis band) will result in a jump to on-road state. The hysteresis band shall be configured to avoid state bouncing which may be useful for displaying stable information status on displays etc.
On-road state	4	On-road state is an intermediate state where the slave axis is controlled to its straight position. Once straight position is reached, the software automatically transits to 'On-road locked state' which is the state suitable for higher vehicle speeds. Two conditions trigger a transition to on-road state: 1) A transition from Operation state (described above) 2) Commanding 'on-road'-mode by means of the manually operated road switch (parameter P3237) On-road state operation: • Command straight position by forcing VAA is forced to 0 and VAP is forced to the slave axis position (P3896). • A timer (P3094) is started to open a time window in which the slave axis shall reach straight position Setting P3094 = 0 will, on switching to on-road mode, disable closed-loop slave axis operation and result in an immediate transition to On-road locked state regardless of the slave axis position. No alarm will be raised if the slave axis angle is not centered. This setting shall be used when the road switch immediately cuts power to the cut-off solenoid valve and thus makes closed-loop control impossible. **Important** The surrounding system shall observe the slave axis position and take appropriate action in case the slave axis is not in a position which is suitable for operation at higher speeds. Setting P3094 to a time (e.g. 5000ms) in which it can be expected that the slave axis has been steered to the straight position, enables achieving automatic slave axis self-centering and transition to on-road locked state. If a road switch is present in the system (P3237=255), then cutting power to the cut-off solenoid valve shall be equally delayed e.g. by applying timed delay relays. If timer P3094 (set to a non-zero value) times out and the slave axis is not inside a configured straight range (P3909), then the N-Axis slave will enter safe state and issue a diagnostic trouble code. **Important** The surrounding system shall take appropriate action in case the slave axis enters safe state. Exit from on-road safe state: • If the vehicle speed drops below P3908 – 0.5·P3907 (half of the vehicle speed hysteresis band), the software will exit and resume N-Axis operation by jumping to Pre-operational. • If the road switch is set to 'N-Axis active/ON'

State	#	Description
On-road locked state	5	In on-road locked state, both the EH proportional valve and the cut-off valve are de-energized, to block steering flows to the slave axis. The hardware is powered but N-Axis closed-loop control is suspended. Internal and external monitoring of the electronics and interfacing signals is active. Sensors are sampled and data is broadcast onto the CAN bus. The slave axis cylinder position is not monitored and purely hydro-mechanically fixed in its position. For leakage considerations, see Zero-leakage valve configuration (option) on page 46. Exit from On-road locked state: • If the vehicle speed drops below P3908 – 0.5·P3907 (half of the vehicle speed hysteresis band), the software will exit and resume N-Axis operation by jumping to Pre-operational. • If the road switch is set to 'N-Axis active/ON'

Operation state machine – fault handling

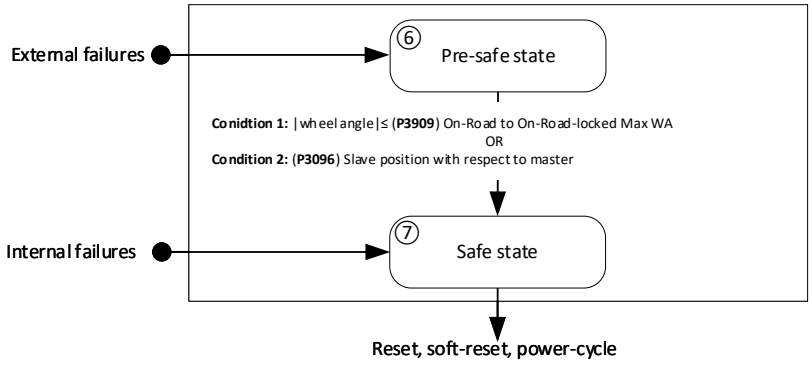

States

State	#	Description
Pre-safe state	6	Pre-safe state enables the N-Axis system to fail gracefully. On detecting any failure classified as 'external', the slave axis is steered to straight whereafter the software jumps to safe state. Operation in Pre-safe state: • Command straight position by forcing VAA is forced to 0 and VAP is forced to the slave axis position (P3896). • A timer (P3096) is started to open a time window in which the slave axis shall reach straight position. If timer P3096 times out and the slave axis is not inside a configured straight range (P3909), then the N-Axis slave will enter safe state. Failures on the following signals are classified as external: • N-Axis MMI CAN message • N-Axis master network CAN message • N-Axis slave network CAN message • Vehicle speed CAN message
Safe state	7	Safe state is reached when the no flow is output to the slave axis steering cylinder. The safe state is achieved by at least one of the below two actions: • De-energizing the EH proportional valve (EH spool is pushed to neutral by a spring force) • De-energizing the cut-off valve (COV spool is pushed to closed position by a spring force)

Functional safety

Certification (pending)

The PVED-CLS N-Axis steering valve controller is certified for use in off-road safety applications up SIL2 according to IEC 61508, PL d according to ISO 13849 and AgPL d according to ISO 25119. Architectures for risk reduction up to SIL3/PL e/AgPL e is specified.

The certificate for the PVED-CLS valve controller can be found in the document PVED-CLS Functional Safety Annex. The PVED-CLS Functional Safety Annex can be found on the Danfoss homepage: www.danfoss.com

The certificate scope is for the generic PVED-CLS valve controller for use in safety-related applications as follows; for off-road applications, safe electro-hydraulic steering is ensured by metering out a safe steering flow as a function of selected steering mode, input steering command, vehicle speed and steered wheel angle.

For on-road operation, functional safety is achieved by de-energizing the PVED-CLS valve controller.

Important
The certificate does not cover safe on-road system to SIL 3, PL e and AgPL e in its entirety as it requires external circuitry, which is not in scope of the assessment.

The certification is not a guarantee for that the realized functional safety is sufficient for any machine. The OEM system integrator is responsible for analyzing the hazard and risks for a particular machine and evaluate if the risks are sufficiently reduced by the provided safety functions. The application of the PVED-CLS and valve sub-system is subject for a separate safety life-cycle.

System integrator responsibility

Attention

It is within the responsibility of the OEM system integrator to:

- Having an organization that is responsible for functional safety of the system.
- Ensuring that only authorized and trained personnel perform functional safety related work.
- Choosing reliable components.
- Completing a system hazard & risk analysis and derive the required risk reduction targets.
- Reassessing the hazard & risk every time the system is changed.
- Ensuring that the derived risks are properly reduced by the safety functions provided by the PVED-CLS valve controller.
- Certification and homologation of the entire system to the desired risk reduction level.
- Installation, set-up, safety assessment and validation of the interfacing sensor sub-systems.
- Parameter configuration of the application software in accordance with this safety manual.
- Validating that the safety functions reduce the risks as expected.
- Any related non-safety standards should be fulfilled for the application and its components.
- Verify the environmental robustness suitability of the PVED-CLS to installation in the final system in its surrounding environment.
- Periodically inspect for errata information updates.

Safety function overview

System/Sensor interface	Road switch	Relay circuitry	N-Axis MMI message	Master wheel angle	N-Axis slave wheel	Vehicle speed sensor	SIL2, PL d, AgPL d	SIL3, PL e, AgPL e
Safety function/safety related control function								
Safe on-road mode / active de-energization	•	•						x
On-road mode (no road switch installed)			•	•	•	•	x	
Safe EH N-Axis steering			•	•	•	•	x	
Safe vehicle speed dependent virtual axis position (VAP) limit			•	•	•	•	x	
Safe vehicle speed dependent virtual axis position (VAP) change rate.								
Safe vehicle speed dependent virtual axis angle (VAA) limit.								
Safe vehicle speed dependent virtual axis angle (VAA) change rate.								
Safe vehicle speed dependent closed-loop control gain limitation								
Safe vehicle speed dependent wheel angle set-point limitation								
Safe N-Axis steering angle initialization (pre-operational).								

•	Element of safety function
x	Highest achievable risk reduction

Functional safety specification

Safe state

The safe state is achieved when no steering flow is provided to/from the steering cylinder and the N-Axis slave cylinder is fixed at its position.
Achieving the safe state relies on a de-energize/fail safe princicple.
To reach the safe state, all safety controlled outputs, i.e. solid state power switches controlling the EHi valve, are de-energized.

For the EHi valve, the safe state is achieved by one or both of the following states:

- The EH-valve main spool of the EH steering valve is in neutral position.
- Cut-off valve spool is in blocked position.

If the PVED-CLS hardware or software detects a failure or fails to function, the safe state will be demanded. One or more diagnostic trouble codes related to the detected failure will be broadcast on the CAN bus. Refer to [Diagnostic Trouble Codes] on page 96.

N-Axis steering operation while in safe state

If an N-Axis steering system enters safe state, N-Axis angle(s) closed-loop control of all N-Axis stops, and the respective N-Axis slave steering angles will freeze.
The operator will detect this as a different vehicle steering behavior when steering the vehicle. The difference in perceived steering behavior will increase with the operators steering input command change. This property shall be considered for ensuring vehicle steering controllability in N-Axis safe state.

Important
The surrounding system shall take appropriate action if an N-Axis slave enters safe state e.g. raising the attention at the operator by means of an acoustic and visual alarm.

Safe state leakage performance

In the safe state the cylinder is isolated and fixed in position. External forces on the steered wheels may cause slow cylinder position drift due to hydraulic leakage.
The maximum leakage is 150ml/min at 150bar cylinder port pressure at ~21cSt (Tellus 32, 50°C).

In application where ~zero cylinder drift is required, additional pilot-operated check valves shall be considered on the cylinder ports. See page 46.

Reset and recovery from safe state

The PVED-CLS cannot leave the safe state by normal application interaction but requires a reset.
Resetting the PVED-CLS valve controller from safe state can be done by any of the below methods:

- Power-cycling battery supply to the PVED-CLS
- Performing a soft-reset by J1939 CAN command [PVED-CLS MultiAxis-Steer communication protocol].
- Perform a jump to and out of boot-loader via KWP2000 start and stop diagnostic session services [PVED-CLS KWP2000 protocol].

All the above-mentioned methods to reset the PVED-CLS from safe state, will force a full Power-on-Self-Test (POST) of the PVED-CLS and valve.

Safety function response time

The safety response time is defined as the period of time between a failure is first observed by the diagnostics and the time by which the safe state has been achieved, e.g. de-energizing the solenoid valves to bring the valve spool(s) within the hydraulic deadband (no steering flow output).

Safety function	Fault reaction/risk mitigation	Safety response time
Safe on-road mode / active de-energization (immediate)	Safe on-road mode	70 ms

Safe EH-steering / N-Axis closed loop cylinder position control Control loop time: 10ms	Safe state	160 ms

The safety related control function 'Safe EH-steering' is executed every 10ms and executes safe closed-loop cylinder position control.
The reaction time for the EHi valve spool to reach neutral position (safe state) from full stroke is typically 60ms for normal working temperature/viscosity.

The 'Safe on-road mode' is demanded by the road switch and switches to safe on-road mode within a 10ms control loop period (react and switch off valve drivers) plus the time it takes for the valve spool to close the steering flows (maximum spool stroke).

Monitoring function response time

The monitoring funciton response time is defined as the period of time between a failure is first observed by the diagnostics and the time by which the safe state has been achieved, e.g. de-energizing the solenoid valves to bring the valve spool(s) within the hydraulic deadband (no steering flow output).

The reaction time for the EHi valve spool to reach neutral position (safe state) from full stroke is typically 60ms for normal working temperature/viscosity.

Monitoring	Fault reaction/risk mitigation	Monitoring response time
		EHi valve
Internal hardware and software	Safe state	160 ms
External sensor monitoring (note 1)		160 ms
Valve main spool monitoring		250 ms (note 2)
Solenoid valve connection monitoring		560 ms

Note 1: Sensor CAN message time-outs are configurable which has a direct impact on the fault reaction time.
Note 2: The spool monitoring fault reaction times are valid when the hydraulics has reached normal working temperature/viscosity.

N-Axis safe EH steering

The safety functions of the N-Axis steering system is to provide :

- "Safe EH steering" (in general) and
- "Safe N-Axis on-road mode"

in multiple axis steering systems.

Safe EH-steering / N-Axis closed loop cylinder position control

The probabilistic calculations are based on FMEDA calculations according to IEC 61508.
The calculations are valid for off-road application mode and related safety functions.
All safety functions and related hardware are included.
Sensor sub-systems as well as road switch are not included as it depends on the system.
The CAN bus contributes less than 1% of SIL2 due to the applied safety protocol and is thus omitted in safety related calculations.

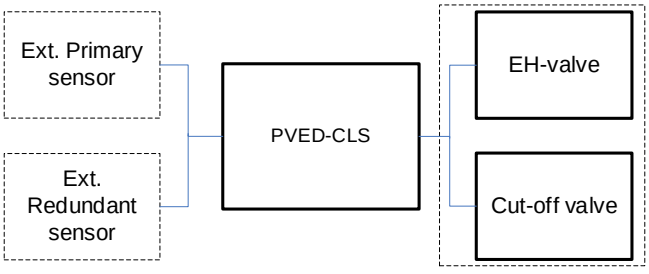

Figure 4 Simplified reliability block diagram

Safety parameter	Specification	Description
SIL	2	IEC 61508 ed. 1 The FMEDA calculation assumes the use of redundant analogue WAS with inverted characteristics.
PFH	$5.77 \cdot 10^{-8}$ [1/h]	
Component type	B	
SFF	98 %	
DC	97 %	
Architecture /category (IEC 61508)	1oo2	
Proof test interval/mission time	20 years	
Reliability handbook	Siemens SN29500	Calculations are performed at an average temperature equal to 80 °C
Fault exclusion	Mechanical valve parts (EH-valve, EH-main spool, cut-off valve, cut-off spool)	On demanding the safe state, both valves do not fail simultaneously. At least one valve will always block the EH steering flow to the cylinder.
OSPE EH-valve test	On-line testing	Direct monitoring by a LVDT sensor.
OSPE Cut-off valve test	Intermittent full stroke test.	Indirect monitoring by test pilot pressure test. Test performed on changing to off-road mode and prior to executing off-road steering functionality.
AgPL/PL	d	Maximum achievable performance level
MTTFd per channel	36 years	ISO 13849, ISO 25119
DCavg per channel	97 % / (95 %)	ISO 13849 / (ISO 25119, lowest of the two channels)
Category	3	ISO 13849, ISO 25119
PVED-CLS and valve sub-system	2	When using with EHPS valve. ISO 13849, ISO 25119
CCF analysis	>65	ISO 13849, ISO 25119
Software Requirement Level	SIL2 / SRL3	IEC 61508, ISO 13849 / ISO 25119
Systematic Capability (SC)	2	IEC 61508

Source: Danfoss PVED-CLS/OSPE/EHPS/EHi FMEDA.

Safe N-Axis on-road mode / N-Axis active de-energize (shut-off)

Additional circuitry is needed for systems where the hazard & risk outcome points to a higher risk reduction (avoiding unintended steering) than the PVED-CLS can provide. External logic shall be installed to have the PVED-CLS powered while being in a de-energized state.

The probabilistic calculations are based on FMEDA calculations according to IEC 61508.
Non-relevant safety parts in the PVED-CLS are excluded in the calculation of the safety related specifications.

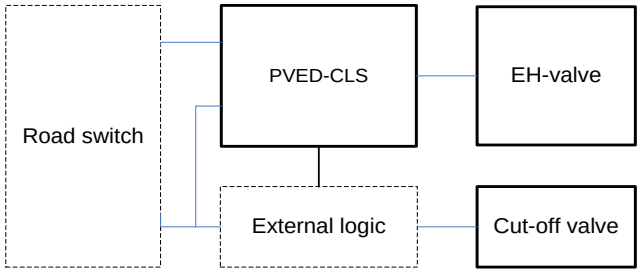

Figure 5 Simplified reliability block diagram

The below data is valid for the safe on-road switch channel containing the PVED-CLS and solenoid valve bridge. For specification on the electro-mechanical channel see section Safety requirements for additional circuitry for SIL3/PL e on page 48.

Safety parameter	Specification	Description
SIL	2	IEC 61508 ed. 1 The FMEDA calculation assumes the use of redundant analogue WAS with inverted characteristics. All circuitry including circuitry for diagnostics is included except LED, temperature sensor and JTAG interface.
PFH	$6.08 \cdot 10^{-8}$ [1/h]	
Component type	B	
SFF	98 %	
DC	97 %	
Architecture /category (IEC 61508)	1oo2	
Proof test interval/mission time	20 years	
Reliability handbook	Siemens SN29500	Calculations are performed at an average temperature equal to 80 °C
Fault exclusion	Mechanical valve parts (EH-valve, EH-main spool, cut-off valve, cut-off spool)	On demanding the safe state, both valves do not fail simultaneously. At least one valve will always block the EH steering flow to the cylinder. Fault accumulation is addressed by OSPE EH-valve and OSPE Cut-off valve test.
OSPE EH-valve test	On-line testing	Direct monitoring by a LVDT sensor.
OSPE Cut-off valve test	Intermittent full stroke test.	Indirect monitoring by test pilot pressure test. Test performed on changing to off-road mode and prior to executing off-road steering functionality.
AgPL/PL	d	Maximum achievable performance level
MTTFd per channel	57 years	Optimized value for this Safety function. ISO 13849, ISO 25119.
DCavg per channel	97 % / (95 %)	ISO 13849 / (ISO 25119, lowest of the two channels)
Category PVED-CLS and valve sub-system	3	When using with OSPE, EHi-E or EHi-H valve. ISO 13849, ISO 25119
	2	When using with EHPS valve. ISO 13849, ISO 25119
CCF analysis	>65	ISO 13849, ISO 25119
Software Requirement Level	SIL2 / SRL3	IEC 61508, ISO 13849 / ISO 25119
Systematic Capability (SC)	2	IEC 61508

Source: Danfoss PVED-CLS/OSPE/EHPS/EHi FMEDA.

N-Axis safety related control functions

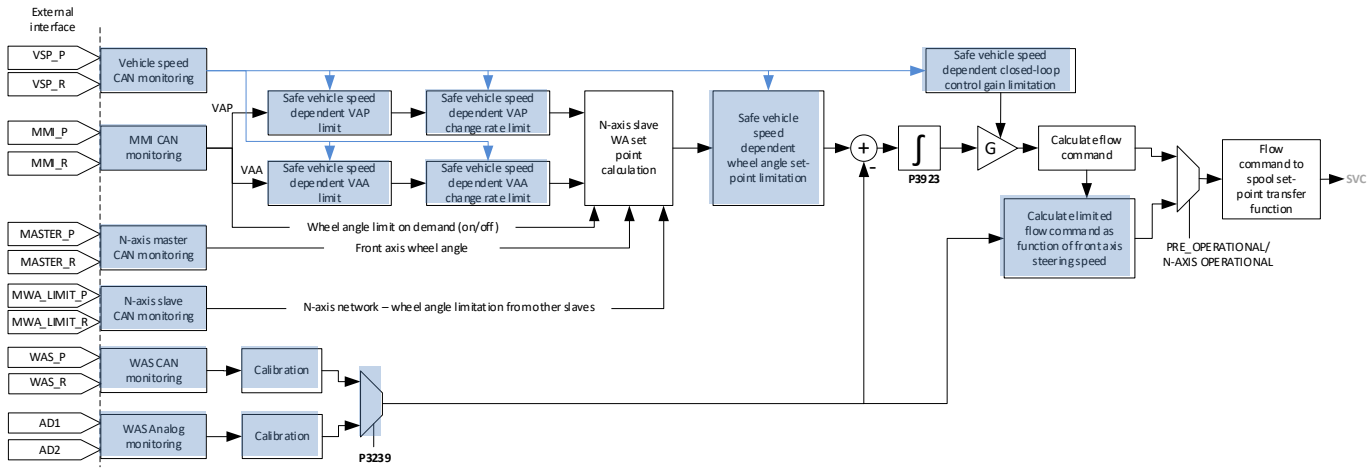

Figure 6 N-Axis EH safe steering block diagram
Blue blocks ( ) provide a link to the related chapter

Safe vehicle speed dependent Virtual Axis Position (VAP) limit

Realizing a safe MMI interface

The safety related control function 'Safe vehicle speed dependent Virtual Axis Position limit' is an instance of the safety functions for realizing a safe N-Axis MMI interface and work in a coordinated fashion with

- [Safe vehicle speed dependent Virtual Axis Position (VAP) change rate],
- [Safe vehicle speed dependent Virtual Axis Angle (VAA) limit] and
- [Safe vehicle speed dependent Virtual Axis Angle (VAA) change rate].

A correctly configured safe MMI interface will allow any random VAP and VAA input value and change rate while maintaining controllable N-Axis operation. No unintended change will lead to loss of steering controllability.
The N-axis MMI interface can in such a case be regarded as non-critical for safe N-Axis operation.

Operation

The received VAP set-point is limited in accordance with a programmable safe VAP range envelope. This may be useful in advanced N-Axis steering modes where VAP can be changed dynamically during N-Axis operation and where there is no expectation to the VAP set-point. In such cases, a safe VAP envelope can be configured.

The safe VAP range is configurable as a three-piece linear characteristic as shown in Figure 8. The software performs linear interpolation to calculate the limited VAP set-point which is used by the N-Axis control algorithm.

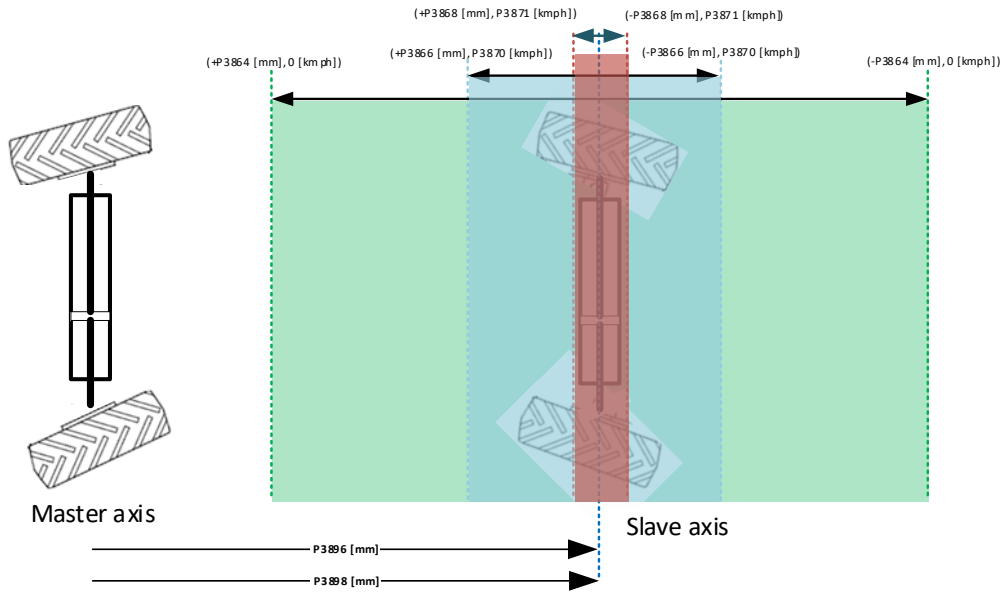

Figure 7 Safe vehicle speed dependent Virtual Axis Position (VAP) limit operation

Parameters

The received VAP is limited to the range defined by the envelope shown in Figure 8.

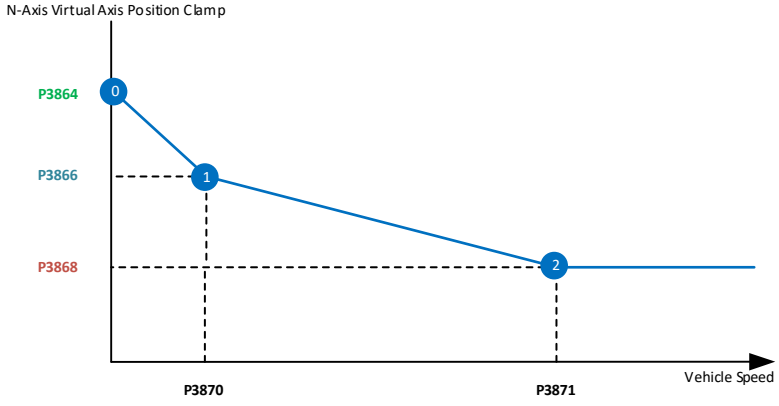

Figure 8 Safe vehicle speed dependent VAP range envelope

Address	Name	Unit	Description of parameter
P3864	N-Axis - Virtual axis position clamp at vehicle speed 0	mm	Clamp the Virtual Axis Position at vehicle speed 0 to the range defined by N-Axis center postion (P3898) +/- this value (P3864)
P3866	N-Axis - Virtual axis position clamp at vehicle speed 1	mm	Clamp the Virtual Axis Position at vehicle speed 1 to the range defined by N-Axis center postion (P3898) +/- this value (P3866)
P3868	N-Axis - Virtual axis position clamp at vehicle speed 2	mm	Clamp the Virtual Axis Position at vehicle speed 2 to the range defined by N-Axis center postion (P3898) +/- this value (P3868)

P3870	N-Axis - Vehicle speed 1 for virtual axis position clamp	kmph	Vehicle speed 1 for Virtual Axis Position clamp
P3871	N-Axis - Vehicle speed 2 for virtual axis position clamp	kmph	Vehicle speed 2 for Virtual Axis Position clamp
P3896	Slave position with respect to the master	mm	Slave Position with respect to the master
P3898	Virtual axis mean position with respect to the master	mm	Virtual axis mean position with resoect to the master

Note: The PVED-CLS performs a plausibility check at start-up on all parameters according to the following rule: P3864 ≥ P3866 ≥ P3868 AND P3870 < P3871

Parameter tuning guideline

Scenario 1: Advanced N-Axis steering - dynamic changing VAP during operation
The 'VAP clamp at vehicle speed 0 kmph' -range (P3864) is typically set to the maximum possible VAP set-point for the vehicle. This value is often determined by the vehicle geometry and the desired maximum turning radius in N-Axis steering mode at low speeds.
At higher vehicle speeds, it may be desired to change the N-Axis steering to a mode which provides better steering stability and controllability at higher speeds. This may be achieved by moving the virtual axis position towards the defined NAXIS_VA_MEAN_POSITION_MM (P3898) as the vehicle speed increases.

The 'Virtual Axis Position clamp at vehicle speed VSP1 and VSP2'-ranges (P3866, P3868) shall progressively made smaller. The resulting VAP set-points are expected to follow this trend.

Setting the 'Virtual Axis Position clamp at vehicle speed VSP2'-range (P3868) to 0 will clamp any non-0 VAP set-point at vehicle speed = VSP2 (P3871) to 0. Consequently, the clamped VAP set-point will be equal to the NAXIS_VA_MEAN_POSITION_MM (P3898). If in addition to this the NAXIS_VA_MEAN_POSITION_MM is identical to the physical slave position the steering behavior will resemble a traditional two-wheel steering system.

Tests shall be performed to validate the safety of the settings.

Scenario 2 Advanced N-Axis steering – static VAP during operation
For N-Axis steering systems where only one N-Axis steering behavior, e.g. round-steering, is desired, the MMI may send a static VAP.
If the static VAP is safe at all vehicle speeds, then P3864, P3866, P3868 can be set equal to the expected static VAP set-point and P3870 and P3871 can be set to the maximum allowed vehicle speed in N-Axis mode.

If the safety validation tests indicate that N-Axis steering is **not** safe at all vehicle speeds, then adjust P3864, P3866, P3868 until steering controllability is reached at all vehicle speeds.

Operation when number of slaves > 1

P3864, P3866, P3868, P3780, P3871 and P3898 shall be set to the same value in all N-Axis slaves.

Safe vehicle speed dependent Virtual Axis Position (VAP) change rate

With the VAP change rate it is possible to set up a relaxed system at high vehicle speed so that any change from the operator will be accepted but will happen at a slow rate moving the Virtual Axis position from one point to another more relaxed.

Realizing a safe MMI interface

The safety related control function 'Safe vehicle speed dependent Virtual Axis Position change rate' is an instance of the safety functions for realizing a safe N-Axis MMI interface and works in a coordinated fashion with:

- [Safe vehicle speed dependent Virtual Axis Position (VAP) limit]
- [Safe vehicle speed dependent Virtual Axis Angle (VAA) limit]
- [Safe vehicle speed dependent Virtual Axis Angle (VAA) change rate]

A correctly configured safe MMI interface will allow any random VAP change rate while maintaining a stable and controllable N-Axis operation.
The N-Axis MMI interface can in such case be regarded as non-critical for safe N-Axis operation after safety validation testing.

Operation

The safety related control function 'Safe vehicle speed dependent Virtual Axis Position (VAP) change rate' operates on the output of safety related control function [Safe vehicle speed dependent Virtual Axis Position (VAP) limit]. See also [**Figure 6 N-Axis EH safe steering block diagram**].

A VAP set-point change is limited in accordance with a programmable 'safe VAP change rate' -range shown in [**Figure 10 Safe vehicle speed dependent VAP change range envelop**]. This may be useful for advanced N-Axis steering modes where the VAP set-point can be changed dynamically during N-Axis operation. In such cases, a safe VAP change rate range can be configured while allowing some freedom to the generation of the VAP set-point.

The safe VAP change rate range is configurable as a three-piece linear characteristic. The software performs linear interpolation to calculate the limited VAP set-point change rate limit at any vehicle speed.

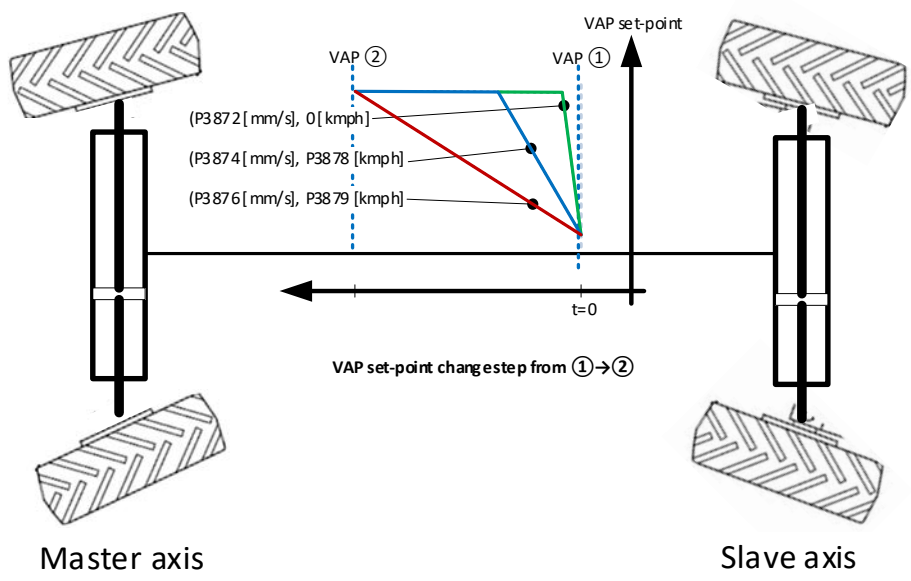

Figure 9 Safe vehicle speed dependent Virtual Axis Position (VAP) change rate operation

Parameter

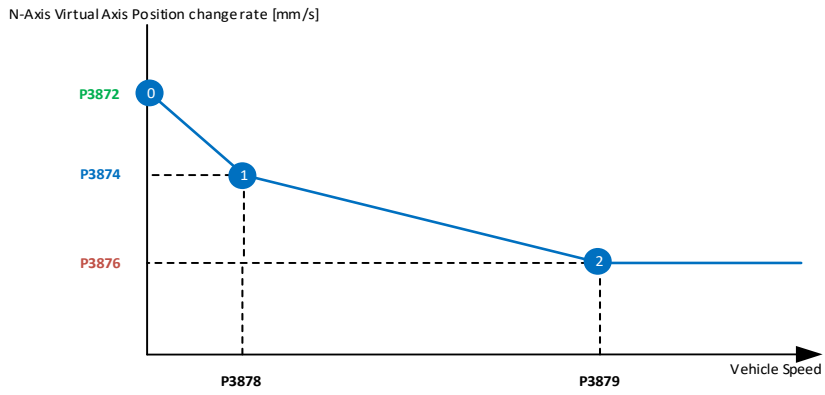

Figure 10 Safe vehicle speed dependent VAP change range envelop

Address	Name	Unit	Description of parameter
P3872	N-Axis - Virtual axis position ramp at vehicle speed 0	mm/s	Virtual Axis Position ramp at Vehicle speed 0.
P3874	N-Axis - Virtual axis position ramp at vehicle speed 1	mm/s	Virtual Axis Position ramp at Vehicle speed 1
P3876	N-Axis - Virtual axis position ramp at vehicle speed 2	mm/s	Virtual Axis Position ramp at Vehicle speed 2
P3878	N-Axis - Vehicle speed 1 for virtual axis position ramp	kmph	Vehicle speed 1 for Virtual Axis Position ramp
P3879	N-Axis - Vehicle speed 2 for virtual axis position ramp	kmph	Vehicle speed 2 for Virtual Axis Position ramp

Note: The PVED-CLS performs a plausibility check at start-up on all parameters according to the following rule: P3872 ≥ P3874 ≥ P3876 AND P3878 < P3879

Parameter tuning guideline

Scenario 1: Dynamically changing VAP during operation

Changing the VAP will alter the vehicle steering mode. A VAP change is typically easier to control at lower speeds than at higher vehicle speeds. The below tuning guideline may serve as a starting point for system integrators.

Refer to Figure 10 Safe vehicle speed dependent VAP change range envelop:

1. Adjust point ⓪: The possible range at which the VAP can change is given by ±P3864 (refer to [Safe vehicle speed dependent Virtual Axis Position (VAP) limit]). Observe, while toggling the VAP set-point between the outer range values ±P3864, that that the steering mode changes at a controllable speed for all front axis steering angles. Tune P3872 as high as possible while achieving the desired steering mode change response when the vehicle is at still-stand.

2. Adjust point ②: As a starting point, set P3876 to e.g. 100 (10mm/s) and set P3879 to the maximum vehicle speed at which N-axis operation is allowed. The possible range of VAP set-points are limited (refer to [Safe vehicle speed dependent Virtual Axis Position (VAP) limit]). Observe, while toggling the VAP set-point between the maximum possible limited values, that that the steering mode changes at controllable speed for all front axis steering angles. Tune P3876 as high as possible while achieving the desired controllable steering mode change response while driving at P3879 kmph.

3. Adjust point ①: As a starting point, set P3878 to 0.5 x P3879 and set P3874 to 0.5 x P3872. The possible range of VAP set-points are limited by [Safe vehicle speed dependent Virtual Axis Position (VAP) limit)]. Observe, while toggling the VAP set-point between the maximum possible limited values, that that the steering mode changes at a controllable speed for all front axis steering angles. Tune P3874 as low as possible while achieving the desired controllable steering mode change response while driving at P3878 kmph.

Scenario 2: Fixed VAP during operation
For N-axis steering systems where a constant VAP set-point is applied during operation, the MMI shall transmit a fixed VAP set-point. Limiting the rate of change for this VAP is only relevant to control an unintended VAP change. Set P3872, P3874 and P3876 to e.g. 100 [mm/s] to achieve a slow changing steering system in the event of receiving an unintended VAP set-point.
P3878 and P3879 are not relevant and shall be set to valid values.

Scenario 3: Disable VAP change rate limiting
VAP change rate limitation can be disabled by setting P3872, P3874 and P3876 to 10000.
P3878 and P3879 are not relevant and shall be set to valid values. Any limited VAP set-point change will take immediate effect.

Operation when number of slaves > 1
P3872, P3874, P3876, P3878, P3879 shall be set to the same value in all N-Axis slaves.

Important

- P3872, P3874, P3876 shall be set to values > 0. VAP rate change limitation will not work when 0 is used.
- The parameter tuning guideline may not apply to all steering systems.

Safe vehicle speed dependent Virtual Axis Angle (VAA) limit

Realizing a safe MMI interface

The safety related control function 'Safe vehicle speed dependent Virtual Axis Angle limit' is an instance of the safety functions for realizing a safe N-Axis MMI interface and work in a coordinated fashion with

- [Safe vehicle speed dependent Virtual Axis Position (VAP) limit],
- [Safe vehicle speed dependent Virtual Axis Position (VAP) change rate],
- [Safe vehicle speed dependent Virtual Axis Angle (VAA) change rate].

A correctly configured safe MMI interface will allow any random VAP and VAA input value and change rate while maintaining controllable N-Axis operation. No unintended change will lead to loss of steering controllability.
The N-axis MMI interface can in such a case be regarded as non-critical for safe N-Axis operation.

Operation

The received VAA set-point is limited in accordance with a programmable safe VAA range envelope. This may be useful in advanced N-Axis steering modes where VAA can be changed dynamically during N-Axis operation and where there is no expectation to the VAA set-point. In such cases, a safe VAA envelope can be configured.

The safe VAA range is configurable as a three-piece linear characteristic. The software performs linear interpolation to calculate the limited VAA set-point which is used by the N-Axis control algorithm.

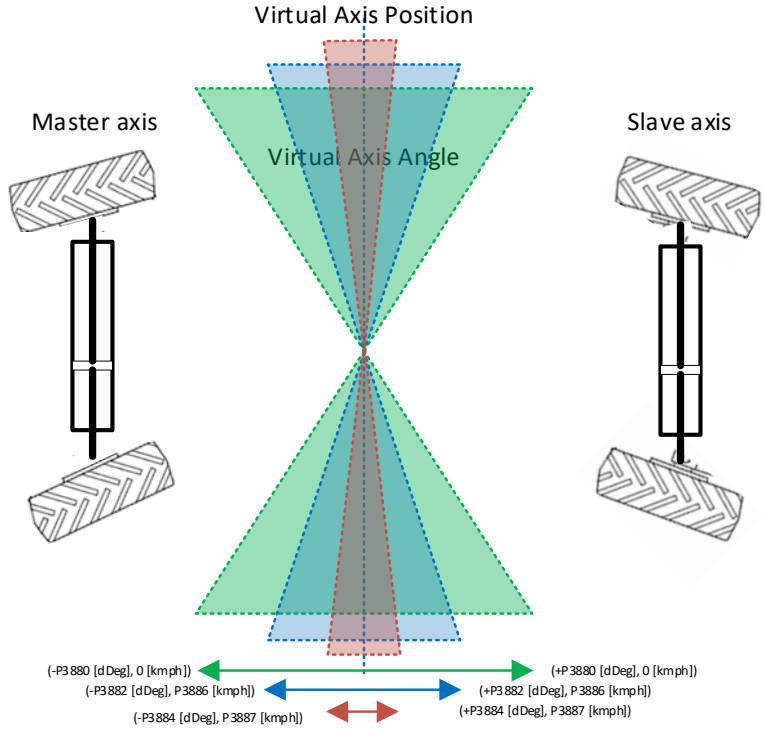

Figure 11 Safe vehicle speed dependent Virtual Axis Angle (VAA) limit operation

Parameter

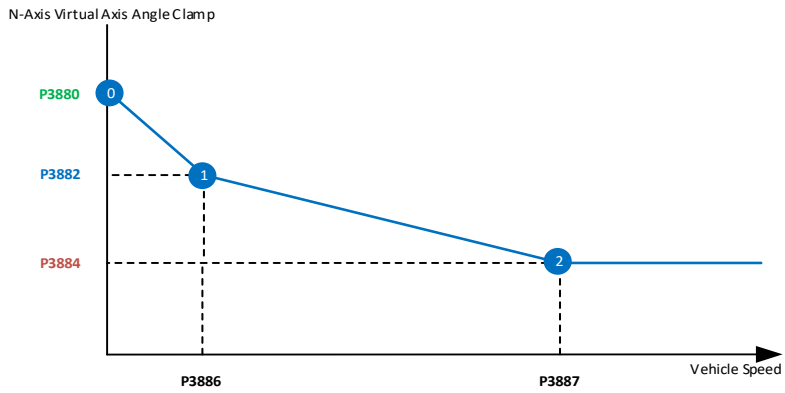

Figure 12 Safe vehicle speed dependent VAA range envelope

Addres	Name	Unit	Description of parameter
P3880	N-Axis - Virtual axis angle clamp at vehicle speed 0	dDeg	Virtual Axis Angle Clamp at Vehicle speed 0
P3882	N-Axis - Virtual axis angle clamp at vehicle speed 1	dDeg	Virtual Axis Angle Clamp at Vehicle speed 1
P3884	N-Axis - Virtual axis angle clamp at vehicle speed 2	dDeg	Virtual Axis Angle Clamp at Vehicle speed 2
P3886	N-Axis - Vehicle speed 1 for virtual axis angle clamp	kmph	Vehicle speed 1 for Virtual Axis Angle clamp
P3887	N-Axis - Vehicle speed 2 for virtual axis angle clamp	kmph	Vehicle speed 2 for Virtual Axis Angle clamp

Note: The PVED-CLS performs a plausibility check at start-up on all parameters according to the following rule: P3880 ≥ P3882 ≥ P3884 AND P3886 < P3887

Parameter tuning guideline

Scenario 1: Advanced N-Axis steering - dynamic changing VAA during operation
The 'VAA clamp at vehicle speed 0 kmph' -range (P3880) is typically set to the maximum possible VAA set-point for the vehicle. This value is often determined by the vehicle geometry and the desired maximum turning radius in N-Axis steering mode at low speeds.
At higher vehicle speeds, it may be desired to change the N-Axis steering to a mode which provides better steering stability and controllability at higher speeds. This may be achieved by changing the virtual axis angle towards zero degree (to align the slave axis-steering to straight) as the vehicle speed increases. In combination with a VAP which is identical to the physical slave axis position this will resemble two-wheel steering.

The 'Virtual Axis Angle clamp at vehicle speed VSP1 and VSP2'-ranges (P3882, P3884) shall progressively made smaller. The resulting VAA set-points are expected to follow this trend.

Setting the 'Virtual Axis Angle clamp at vehicle speed VSP2'-range (P3886) to 0 will clamp any non-0 VAA set-point at vehicle speed = VSP2 (P3887) to 0. Consequently, the clamped VAA set-point will be equal to zero degree (no N-Axis operation will be performed) and the steering behavior will resemble a traditional two-wheel steering system.

Tests shall be performed to validate the safety of the settings.

Scenario 2 Advanced N-Axis steering – static VAA during operation
For N-Axis steering systems where only one N-Axis steering behavior, e.g. round-steering, is desired, the MMI may send a static VAA.
If the static VAA is safe at all vehicle speeds, then P3880, P3882, P3884 can be set equal to the expected static VAA set-point and P3886 and P3887 can be set to the maximum allowed vehicle speed in N-Axis mode.

If the safety validation tests indicate that N-Axis steering is **not** safe at all vehicle speeds, then adjust P3882, P3884, P3886 until steering controllability is reached at all vehicle speeds.

Operation when number of slaves > 1

P3880, P3882, P3884, P3786, P3887 shall be set to the same value in all N-Axis slaves.

Safe vehicle speed dependent Virtual Axis Angle (VAA) change rate

With the VAA change rate it is possible to set up a relaxed system at high vehicle speed so that any change from the operator will be accepted but will happen at a slow rate moving the Virtual Axis Angle from one point to another more relaxed.

Realizing a safe MMI interface

The safety related control function 'Safe vehicle speed dependent Virtual Axis Angle change rate' is an instance of the safety functions for realizing a safe N-Axis MMI interface and works in a coordinated fashion with:

- [Safe vehicle speed dependent Virtual Axis Position (VAP) limit]
- [Safe vehicle speed dependent Virtual Axis Position (VAP) change rate]
- [Safe vehicle speed dependent Virtual Axis Angle (VAA) limit]

A correctly configured safe MMI interface will allow any random VAA change rate while maintaining a stable and controllable N-Axis operation.
The N-Axis MMI interface can in such case be regarded as non-critical for safe N-Axis operation after safety validation testing.

Operation

The safety related control function 'Safe vehicle speed dependent Virtual Axis Angle (VAA) change rate' operates on the output of [Safe vehicle speed dependent Virtual Axis Angle (VAA) limit]. See also [**Figure 6 N-Axis EH safe steering block diagram**].

A VAA set-point change is limited in accordance with a programmable 'safe VAA change rate' -range shown in [**Figure 14 Safe vehicle speed dependent VAA change range envelope**]. This may be useful for advanced N-Axis steering modes where the VAA set-point can be changed dynamically during N-Axis operation. In such cases, a safe VAA change rate range can be configured while allowing some freedom to the generation of the VAA set-point.

The safe VAA change rate range is configurable as a three-piece linear characteristic. The software performs linear interpolation to calculate the limited VAA set-point change rate limit at any vehicle speed.

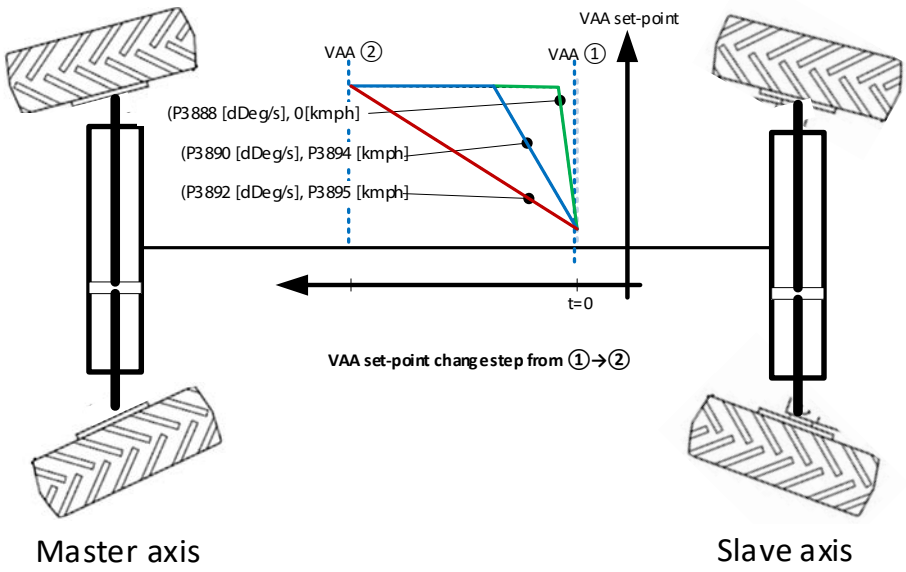

Figure 13 Safe vehicle speed dependent Virtual Axis Angle (VAA) change rate operation

Parameter

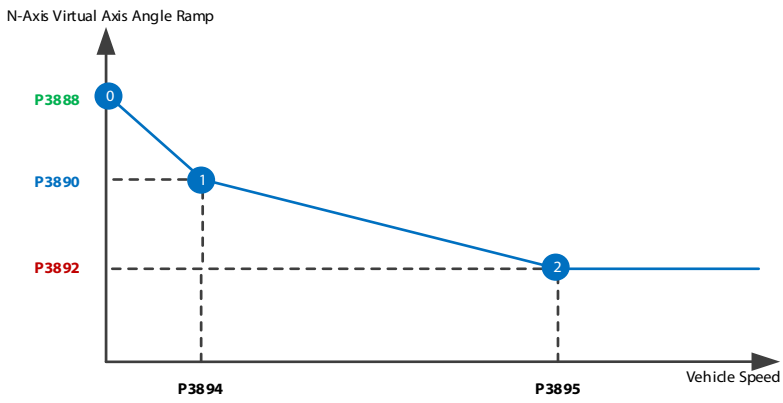

Figure 14 Safe vehicle speed dependent VAA change range envelope

Address	Name	Unit	Description of parameter
P3888	N-Axis - Virtual axis angle ramp at vehicle speed 0	cDeg/10ms	Virtual Axis Angle Ramp at Vehicle speed 0
P3890	N-Axis - Virtual axis angle ramp at vehicle speed 1	cDeg/10ms	Virtual Axis Angle Ramp at Vehicle speed 1
P3892	N-Axis - Virtual axis angle ramp at vehicle speed 2	cDeg/10ms	Virtual Axis Angle Ramp at Vehicle speed 2
P3894	N-Axis - Vehicle speed 1 for virtual axis angle ramp	kmph	Vehicle speed 1 for Virtual Axis Angle ramp
P3895	N-Axis - Vehicle speed 2 for virtual axis angle ramp	kmph	Vehicle speed 2 for Virtual Axis Angle ramp

Note: The PVED-CLS performs a plausibility check at start-up on all parameters according to the following rule: P3888 ≥ P3890 ≥ P3892 AND P3894 < P3895

Parameter tuning guideline

Scenario 1: Dynamically changing VAA during operation
Changing the VAA will alter the vehicle steering mode. A VAA change is typically easier to control at lower speeds than at higher vehicle speeds. The below tuning guideline may serve as a starting point for system integrators.

Refer to Figure 14 Safe vehicle speed dependent VAA change range envelope:

4. Adjust point ⓪: The possible range at which the VAA can change is given by ±P3880 (refer to [Safe vehicle speed dependent Virtual Axis Angle (VAA) limit]). Observe, while toggling the VAA set-point between the outer range values ±P3880, that that the steering mode changes at a controllable speed for all front axis steering angles. Tune P3888 as high as possible while achieving the desired steering mode change response when the vehicle is at still-stand.

5. Adjust point ②: As a starting point, set P3892 to e.g. 100 (10dDeg/s) and set P3895 to the maximum vehicle speed at which N-axis operation is allowed. The possible range of VAA set-points are limited by [Safe vehicle speed dependent Virtual Axis Angle (VAA) limit]. Observe, while toggling the VAA set-point between the maximum possible limited values, that that the steering mode changes at controllable speed for all front axis steering angles. Tune P3892 as high as possible while achieving the desired controllable steering mode change response while driving at P3895 kmph.

6. Adjust point ①: As a starting point, set P3890 to 0.5 x P3888 and set P3894 to 0.5 x P3895. The possible range of VAA set-points are limited by [Safe vehicle speed dependent Virtual Axis Angle (VAA) limit]. Observe, while toggling the VAA set-point between the maximum possible limited values, that that the steering mode changes at a controllable speed for all front axis steering angles. Tune P3890 as low as possible while achieving the desired controllable steering mode change response while driving at P3894 kmph.

Scenario 2: Fixed VAA during operation
For N-axis steering systems where a constant VAA set-point is applied during operation, the MMI shall transmit a fixed VAA set-point. Limiting the rate of change for this VAA is only relevant to control an unintended VAA change. Set P3888, P3890 and P3892 to e.g. 10 [dDeg/s] to achieve a slow changing steering system in the event of receiving an unintended VAA set-point.
P3894 and P3895 are not relevant and shall be set to valid values.

Scenario 3: Disable VAA change rate limiting
VAA change rate limitation can be disabled by setting P3888, P3890 and P3892 to 18000.
P3894 and P3895 are not relevant and shall be set to valid values. Any limited VAA set-point change will take immediate effect.

Operation when number of slaves > 1

P3888, P3890, P3892, P3894, P3895 shall be set to the same value in all N-Axis slaves.

Important

- P3888, P3890, P3892 shall be set to values > 0. VAA rate change limitation will <u>not</u> work when 0 is used.
- The parameter tuning guideline may not apply to all steering systems.

Safe vehicle speed dependent closed loop gain limitation

Realizing a safe closed-loop position control of the slave axis

The safety function 'Safe vehicle speed dependent closed loop gain limitation' is an instance of the safety functions for realizing a safe N-Axis closed-loop control of the slave axis steering angle and works in a coordinated fashion with:

- [Safe vehicle speed dependent wheel angle setpoint limitation]

Operation

The safety function 'Safe vehicle speed dependent closed loop gain limitation' shall be configured to achieve a safe and controllable closed-loop control of the slave steering axis at all vehicle speeds in, all applicable steering modes. See Figure 15.

The basic proportional closed-loop control gain is set in accordance with a programmable gain characteristic shown in Figure 16. The proportional gain is configurable as a three-piece linear characteristic. The software performs linear interpolation to calculate the exact gain to apply at any vehicle speed. The proportional gain to apply is machine dependent i.e. shall be set relative to the valve size and rear axis steering cylinder dimensions.

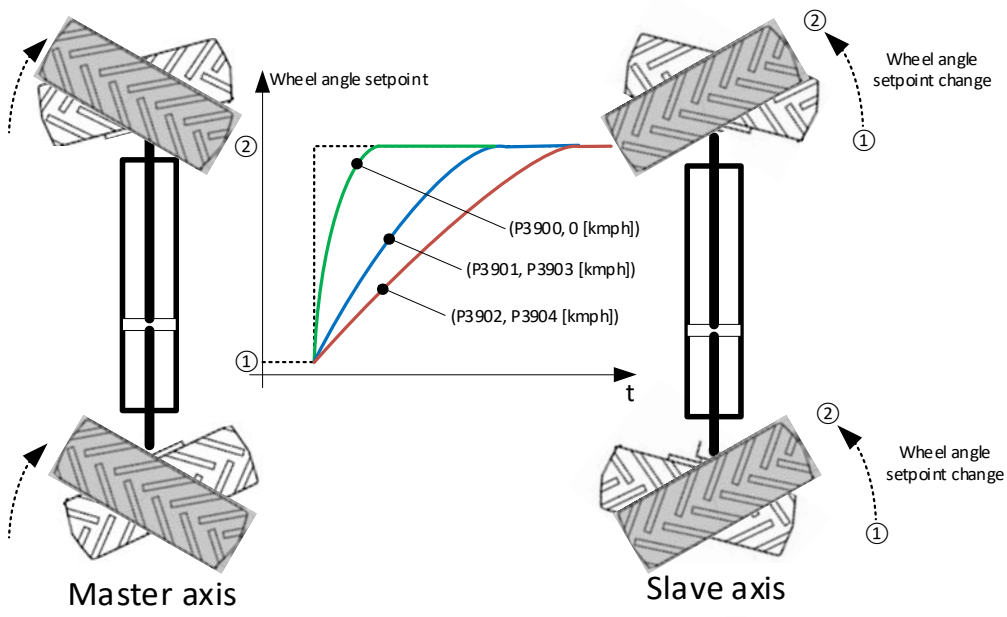

Figure 15 Safe vehicle speed dependent closed-loop gain limit (ex. round-steering mode)

Parameters

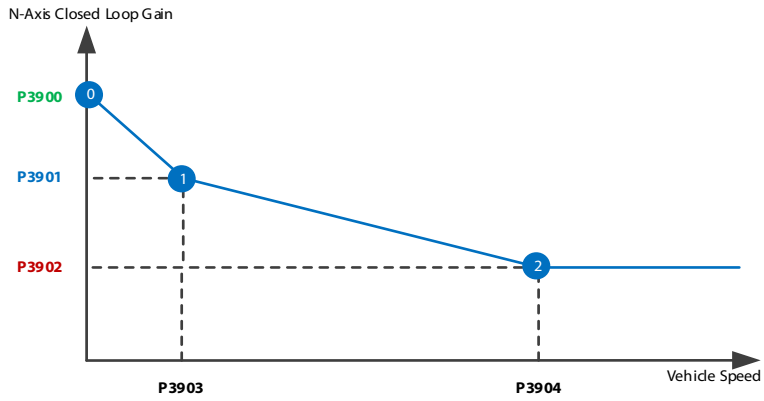

Figure 16 Safe vehicle speed dependent closed-loop proportional gain

Address	Name	Unit	Description of parameter
P3900	N-Axis - Closed loop gain at vehicle speed 0	%	Closed loop gain at vehicle speed 0
P3901	N-Axis - Closed loop gain at vehicle speed 1	%	Closed loop gain at vehicle speed 1
P3902	N-Axis - Closed loop gain at vehicle speed 2	%	Closed loop gain at vehicle speed 2
P3903	N-Axis - Vehicle speed 1 for closed loop gain 1	kmph	Vehicle speed 1 for closed loop gain
P3904	N-Axis - Vehicle speed 2 for closed loop gain 2	kmph	Vehicle speed 2 for closed loop gain

Note: The PVED-CLS performs a plausibility check at start-up on all parameters according to the following rule: P3900 ≥ P3901 ≥ P3902 AND P3903 < P3904

Parameter tuning guideline

1. Adjust point ⓪: The proportional gain to apply at 0 kmph is set by P3900. Observe, while steering the front axis aggressively from side to side, that that the rear axis steers is a responsive manner. Tune P33900 as low as possible while achieving the desired steering response. Observe that the closed-loop performance is not suffering from under- and overshoot. No visible steady-state jitter shall be present. Perform the test for all applicable steering modes.

2. Adjust point ②: Set P3904 to the maximum vehicle speed at which N-axis steering is used. As a starting point, set P3902 to 10% of P3900. Observe, while steering the front axis aggressively from side to side, that that the steering of the vehicle is controllable in all applicable steering modes at P3904 kmph. Incrementally adjust P3902 until the closed-loop performance criterion is met at P3904 kmph for all applicable steering mode.

3. Adjust point ①: As a starting point, set P3901 to 0.5 x P3902 and set P3903 to 0.5 x P3904. Observe, while steering the front axis aggressively from side to side, that that the steering of the vehicle is controllable in all applicable steering modes at P3903 kmph. Incrementally adjust P3901 until the closed-loop performance criterion is met at P3903 kmph for all applicable steering mode.

4. Iterate step 1 to 3 until the vehicle controllability criterion is fulfilled in the entire N-axis operation vehicle speed range.

Important

- Alternatively, to stimulating the rear axis by the front axis manual steering input, consider instrumenting the front steering angle input ([Master_WA_P], [Master_WA_R] via a CAN-tool to simulate step changes from the front steering axis. See [PVED-CLS MultiAxis-Steer communication protocol].
- Ensure that operation mode is 'N-axis operational' while tuning the parameters. Tuning while the system is in 'On-road' or 'On-road locked' state may give wrong results.

Operation when number of slaves > 1

P3900, P3901, P3902, P3903 and P3904 shall be set to the same value in all N-Axis slaves.

Safe vehicle speed dependent wheel angle setpoint limitation

This safety concept is to allow wider slave wheel angle at low vehicle speed and limit the range for higher vehicle speed. This is done by reducing the slave wheel angle set point as a function of vehicle speed.
This makes it possible to obtain a safe 2-wheel steering system at high vehicle speed by centering the slave wheel angle.

Realizing a safe closed-loop position control of the slave axis

The safety function 'Safe vehicle speed dependent wheel angle setpoint limitation' is an instance of the safety functions for realizing a safe N-Axis closed-loop control of the slave axis steering angle and works in a coordinated fashion with:

- [Safe vehicle speed dependent closed loop gain limitation]

Operation

The safety function 'Safe vehicle speed dependent wheel angle setpoint limitation' shall be configured to achieve a safe and controllable closed-loop control of the slave steering axis at all vehicle speeds in, all applicable steering modes. The objective is to avoid entering a too narrow curvature at a too high vehicle speed. The calculated slave wheel angle set-point is limited in accordance with a programmable safe wheel angle setpoint range envelope as shown in Figure 17.

The safe wheel angle setpoint range is configurable as a three-piece linear characteristic. The software performs linear interpolation to calculate the limited wheel angle set-point which is used by the N-Axis control algorithm.

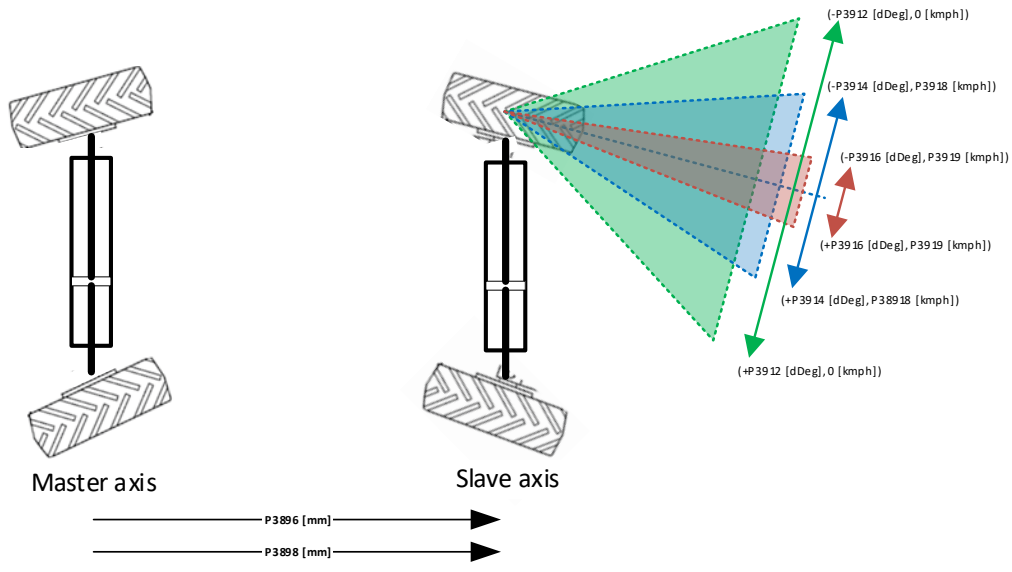

Figure 17 Safe vehicle speed dependent wheel angle set point limitation

Parameters

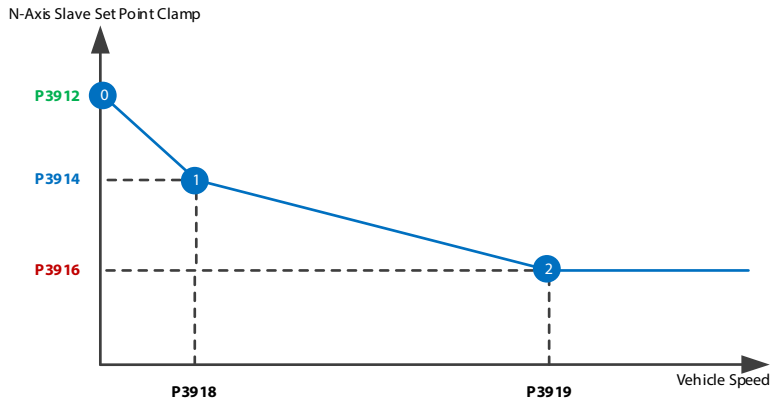

Figure 18 Safe vehicle speed dependent Set Point range envelope

Addres	Name	Unit	Description of parameter
P3912	N-Axis - Slave set point angle clamp at vehicle speed 0	dDeg	N-Axis slave wheel angle set point clamp at vehicle speed 0
P3914	N-Axis - Slave set point angle clamp at vehicle speed 1	dDeg	N-Axis slave wheel angle set point clamp at vehicle speed 1
P3916	N-Axis - Slave set point angle clamp at vehicle speed 2	dDeg	N-Axis slave wheel angle set point clamp at vehicle speed 2
P3918	N-Axis - Vehicle speed 1 for slave set point 1	kmph	Vehicle speed 1 for N-Axis slave wheel angle set point clamp
P3919	N-Axis - Vehicle speed 2 for slave set point 2	kmph	Vehicle speed 2 for N-Axis slave wheel angle set point clamp
P3896	Slave position with respect to the master	mm	Slave Position with respect to the master
P3898	Virtual axis mean position with respect to the master	mm	Virtual axis mean position with resoect to the master

Note: The PVED-CLS performs a plausibility check at start-up on all parameters according to the following rule: P3912 ≥ P3914 ≥ P3916 AND P3918 ≤ P3919

Parameter tuning guideline

1. Adjust point ⓪: The possible wheel angle setpoint range at 0 kmph is given by ±P3912. Observe, for all configured steering modes, that that the rear axis steering deflection is within the expected range for all front axis steering angles.

2. Adjust point ②: As a starting point, set P3916 to a low value e.g. 5 degrees and set P3919 to the maximum vehicle speed at which N-axis operation is allowed/possible. Observe, while steering the front axis from end-lock to end-lock, that steering the vehicle is safe, controllable and without uncomfortable side words accelerations. Repeat for all possible steering modes.

3. Adjust point ①: As a starting point, set P3914 to 0.5 x P3916 and set P3918 to 0.5 x P3919. Observe, while steering the front axis from end-lock to end-lock, that steering the vehicle is safe, controllable and without uncomfortable side words accelerations. Repeat for all possible steering modes.

4. Iterate point 2 and 3 until the safety and controllability criteria are satisfied.

Operation when number of slaves > 1

P3918, P3919 and P3898 shall be set to the same value in all N-Axis slaves.
It shall be verified that all N-axis slave wheel angles are correctly calculated and that all slaves are in the respective correct steering angles (no slave misalignment, axis dragging or tire wear etc. shall be observed).
The wheel angle setpoints for slave N=2,3… shall be observed when slave N=1 is at point ⓪, ① and ② respectively and used as parameter for P3912, P3914 P3916 in the respective slaves.
See [PVED-CLS MultiAxis-Steer communication protocol].

Safe N-Axis steering angle initialization (pre-operational)

Operation

At system start-up the slave axis angles may not be aligned with the front axis for a given steering mode. The misalignment may be due to switching N-axis operation off or after an auto-guidance work-cycle. The software will detect the misalignment and set the operation state to pre-operational state.

The objective with this safety related control function is to avoid an instaneous self-steering movement of the slave axis when enabling N-axis mode.

A slave steering cylinder “inching” algorithm becomes active while in pre-operational state. The calculated slave axis steering flow, required to cancel the slave axis wheel angle error, is limited by the the front axis steering speed. The slave axis wheel angle thus only changes when the front axis steering angle changes.

The front axis steering speed is derived by differentiating the front axis wheel angle over a period given by P3905. Only front axis steering speed which exceeds a noisegate (P3906) is used to limit the closed-loop control output.

When the slave axis wheel angle is inched inside the tolerance range given by P3910, the software exits pre-operational mode and enters N-axis operation mode.

Parameters

Addres	Name	Unit	Description of parameter
P3905	Time parameter of moving average filter for calculation of average master WAS speed	x10mSec	Average Master WAS speed. This value will also be used to sample the Master WAS Speed.
P3906	Master WAS Speed Noise Gate	Deg/s	Noise gate for Master WAS speed below which Master WAS Speed will be considered 0
P3910	Preoperational to Operational WA Threshold	dDeg	When the error between the wheel angle and the wheel angle setpoint is below this value, the operational state shifts from pre-op to operational

Parameter tuning guideline

Leave P3905 at the default value.
Leave P3906 at the default value. If the front axis wheel angle sensor sub-system is noisy and the problem cannot be solved in the front axis master system, the value shall be increased.
Leave P3910 at the default value. Increasing P3910 may lead to a quicker slave axis angle alignment but at the cost of self-steering i.e. slave axis steering which is not initiated by the driver.

Operation when number of slaves > 1

P3905, P3910 shall be set to the same value in all N-Axis slaves.

System Architecture

System diagrams

N-Axis master [hydrostatic]

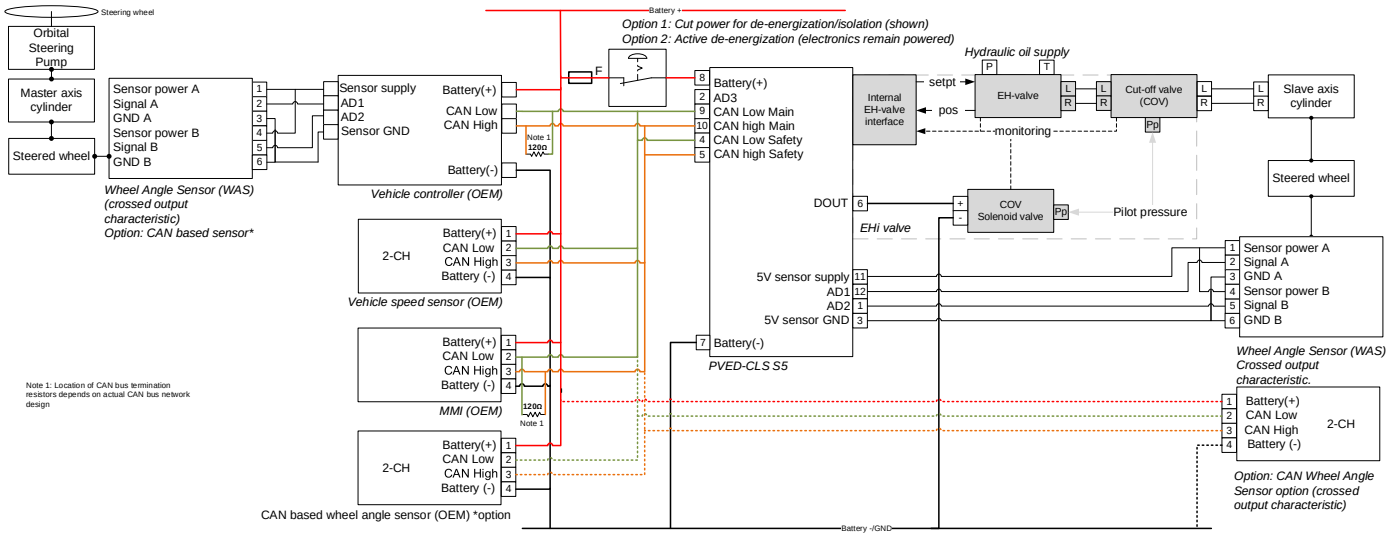

N-Axis master [electro-hydraulic]

Same as above but with a PVED-CLS S5 on the master axis used in N-Axis master mode (planned feature).

PVED-CLS steering controller

Connector interface

Please see section [PVED-CLS Connector interface].

Technical specification

For information regarding technical specification, please see [PVED-CLS Technical Specification].

DC Power supply

The PVED-CLS is designed to operate reliably at battery voltages between 11 and 35.5V. Protection circuitry ensures that the PVED-CLS electronics can withstand the absolute maximum voltage levels. Circuitry is in place to perform voltage control with safety shut-off to address over-voltage failure scenarios which could potentially lead to loss of safety functions.

Important

If the power supply goes below 5.5V, the PVED-CLS will shut down without sending any warning.
If the voltage goes below 9V, the PVED-CLS will stay in operation mode but send out an INFO level DTC. Note that below 9V the electro-hydraulic functions of an EHPS, EHi and OSPE may work at a reduced performance.
In case the supply voltage exceeds 35.5V, a DTC is issued on the CAN bus, and the PVED-CLS will enter safe state.
On detection of internal supply over-voltages, the power to the solenoid valve bridge and the cut-off solenoid valve will be switched off by discrete circuitry.

Experience shows that excessively low supply voltage may occur during engine cranking in cold conditions, depending on the state of battery charge, and/or general state of battery.

Refer to [PVED-CLS Technical Specification] for the absolute maximum electrical steady-state voltage levels.
See [Diagnostic Trouble Codes] on page 96 for details on error codes.

Road-switch de-power / de-energize architectures

ON/OFF switch interface - Active de-energize (immediate)

The N-Axis slave can be configured to immediate shut-down when the road switch is set to on-road mode.
A road switch sub-system can be used for bringing the PVED-CLS and EHi-E and EHi-H valve sub-systems into a state which is suitable for on-road operation while keeping the PVED-CLS operational.
The below architecture is suitable for achieving SIL 3, PL e for shutting off of EH-steering flows for public road transportation. The PVED-CLS can remain powered in this state.

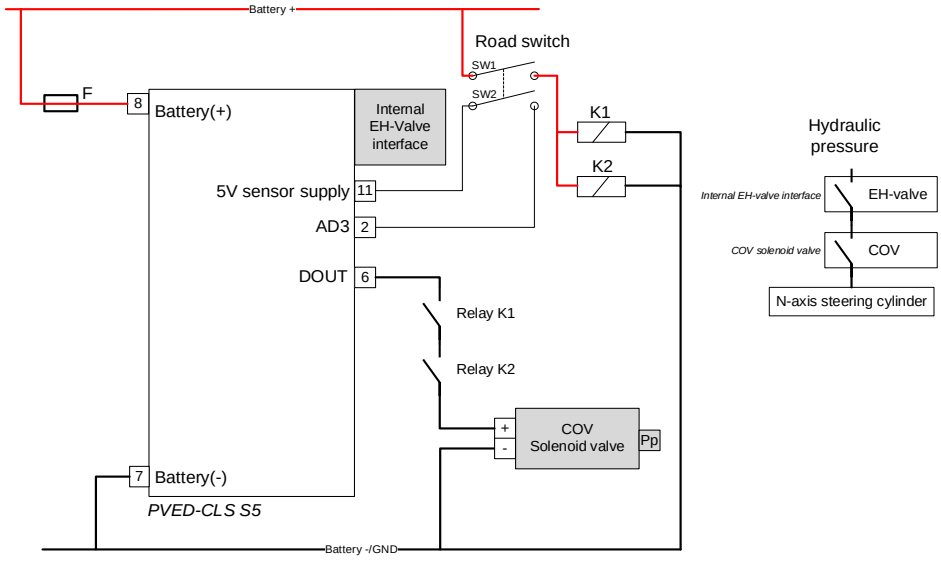

Figure 19 Principle diagram

To achieve SIL3/PL e with the PVED-CLS, an independent and diverse shut-down channel using two relays to disconnect the power to the cut-off valve, shall work in parallel with the PVED-CLS.

Operation

Input redundancy is achieved by using redundant switch, SW1 and SW2. Redundancy on the logic for de-powering the valves is achieved by using the PVED-CLS to control the EH-valve and relay logic for de-energizing the coil for the cut-off solenoid valve.
Redundancy on de-energizing the valves is achieved by de-energizing the solenoid valve bridge and the cut-off solenoid valve.

To enable the road switch interface for a PVED-CLS and EHi valve, the following parameter settings are required.

Address	Name	Unit	Description of parameter
P3072	Cut-off valve present	BOOL	External cut-off valve present. 0 = not present, 255 = present (default)
P3237	Road switch present (connected to AD3)	BOOL	Road switch present. 255 = present. 0 = not present, 255 = present (default)
P3094	Timeout within which the wheels must get aligned straight before going from off road to OnRoad due to road switch position	x10msec	Maximum time allowed for the N-Axis slave to steer to straight position when commanded in on-road mode. P3094=0 (default). 'On-road locked' state is demanded immediately.

When switching from off-road to on-road, the operation state switches to 'on-road locked' immediately. The N-Axis wheel angle is not monitored with respect to if it is in the straight position range. The system integrator shall monitor the N-Axis slave wheel angle and take appropriate action if the N-Axis slave angle is not in straight position. The PVED-CLS will not issue any trouble code.

Attention

The system integrator shall:

- Monitor the N-Axis slave angle in 'on-road locked' state and take appropriate action if not in straight range.
- Supply the road switch and relay components.
- Ensure that the switch, relay, wiring and installation enclosure satisfies the requirements in ISO 13849-2 annex A and D, IEC 60947-5-1 and IEC 60204.
- Ensure that the sub-system components are fit for the purpose.
- Conduct an FMEA to uncover dangerous failures.
- Implement measures against dangerous failures.
- Perform a CCF analysis.
- Carry out verification and validation of the architecture on commissioning and after maintenance.

Interface

The road switch SW2 controls the PVED-CLS power to the solenoid valve bridge. SW1 controls the power to the relay logic. The state of SW1 switch position is obtained by the PVED-CLS by measuring the relay contact state via a current measurement and test pulse monitoring.

Road switch position		PVED-CLS enable (AD3)	Relay supply	Relay contacts	Cut-off valve
Off-road	SW1 closed		Battery supply	Closed	Can be pressurized
	SW2 closed	EH-steering enabled 4700mV < AD3 input < 5300mV			
On-road	SW1 open		0V	Open	De-energized
	SW2 open	EH-steering disabled/prohibited AD3 input < 500mV			

Important

- The sub-system shall supply a valid input on AD3 no later than 10 seconds after the PVED-CLS is powered.
- The requirements in Safety requirements for additional circuitry for SIL3/PL e page 48 shall be respected.

Monitoring

The SW2 signal supplied to AD3 is range checked. If the voltage is out of the on-road or the off-road voltage range for more than 100ms, then the PVED-CLS enters safe state.
The 5 V sensor supply line is monitored. If the supply voltage is overloaded or short-circuited causing it exceeds the nominal voltage, the PVED-CLS enters safe state.

Monitoring of the switch is performed by the PVED-CLS by comparing the output of SW1 and SW2. SW2 switches the 5V supply voltage to the PVED-CLS AD3 input. The PVED-CLS validates the input voltage on AD3. If the voltage is in the range 5 V ±300 mV, then SW2 is determined to be in off-road mode. If the voltage is below 500 mV, then SW2 is determined to be on-road position. The PVED-CLS will enter safe state if the AD3 input voltage is outside the two voltage ranges for more than 100 ms.

SW2 is monitored via PVED-CLS cut-off output pin 6. When SW2 signals on-road mode, the PVED-CLS switches off the power to the solenoid valve (sourced from the Cut-off output) and 100 ms after AD3 has changed from off-road mode to on-road mode (see note 1), the PVED-CLS starts a low-power test pulse pattern to measure that no electrical connection exists to the solenoid valve. If the low-power test pulse leads to a current build-up, then the PVED-CLS enter safe state. The monitoring principle is equivalent to cross-monitoring SW1 and SW2. It cannot be determined if the failure is caused by SW1 or one of the relays.
The low-power test pulse cannot lead to pressuring the cut-off valve.

When SW2 signals off-road mode, the PVED-CLS cut-off output will stop outputting low-power test pulses and start to supply current to the solenoid valve to pressurize the cut-off valve. The PVED-CLS monitors the current that is supplied to the solenoid valve. If the supplied current does reach 50% of the current set-point, then the PVED-CLS will enter safe state. The PVED-CLS cannot detect a welded relay contacts while operating in off-road mode. On switching to on-road mode (demanding the safety function), the current supply to the solenoid valve will stop and the low-power test pulses will detect the two welded relays or SW1 stuck at off-road position.

Note 1: The delay of 100ms from the mode has changed to on-road mode until low-power test pulse pattern starts, has been introduced in order to prevent false errors caused by relay-contact bounce.

Important

- The monitoring technique is based on a comparison with a reference sensor technique. A diagnostic coverage in the range 90-99 % may be claimed provided that the sub-system is integrated according to the specification.
- Some single faults cannot be detected until a second fault occurs.
- Two undetected faults may be present but the safety function is not lost.
- The two undetected faults will be detected when the safety function is demanded (on-road mode).

ON/OFF switch interface - Active de-energize (automatic return to straight)

The N-Axis slave can be configured to automatically steer to the straight position and shut-down when the road switch is set to on-road mode. The architecture is identical to on page 59 except for using timed relays which open-circuits after a pre-set time.

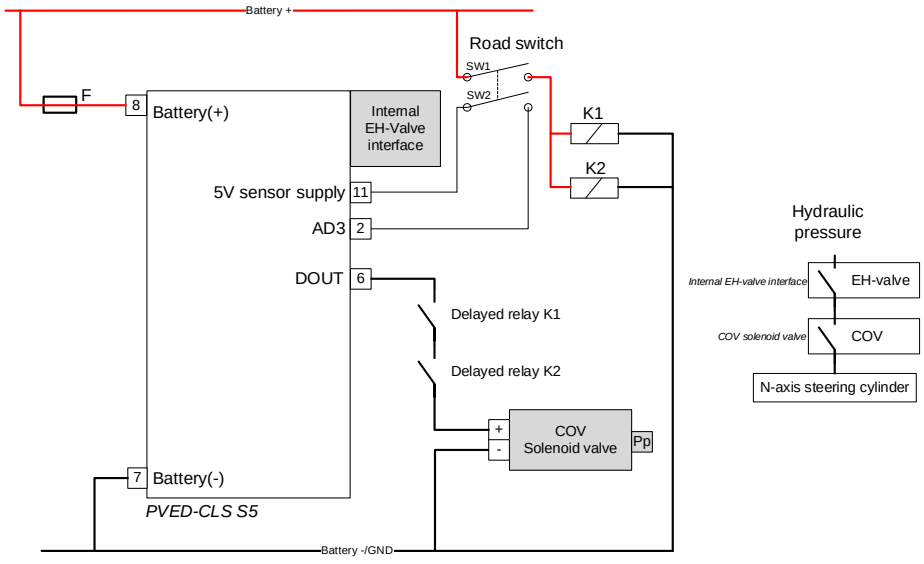

Figure 20 Active de-energize (automatic return to straight)

Operation

To enable the road switch interface for a PVED-CLS and EHi valve with automatic steering to straight position before shut-down, the following parameter settings are required.

Address	Name	Unit	Description of parameter
P3072	Cut-off valve present	BOOL	External cut-off valve present. 0 = not present, 255 = present (default)
P3237	Road switch present (connected to AD3)	BOOL	Road switch present. 255 = present. 0 = not present, 255 = present (default)
P3094	Timeout within which the wheels must get aligned straight before going from off road to OnRoad due to road switch position	x10msec	Maximum time allowed for the N-Axis slave to steer to straight position when commanded in on-road mode. P3094=500 (5 seconds). Example.
P3909	On-Road to On-Road-Locked Max WA	dDeg	N-Axis straight position range in dDeg. When the wheel angle is equal or less than this range, (0.5 degrees), operation mode changes to 'on-road locked' state.

When switching from off-road to on-road, the operation state switches to 'on-road' state. A timer is loaded with the value of P3094 and starts to count down. While counting down, the N-Axis control algorithm controls the N-Axis slave cylinder to the straight position. When the N-Axis slave angle below the straight range set by P3909, the operation state changes to 'on-road locked'.
See also [Operation state machine] page 14.

Important

- P3094 shall be carefully tuned to allow the N-Axis slave to steer the cylinder to the straight position within the specified time at all oil visocities.
- P3094 shall be matched with the relay delay time. It is recommended to set P3094 to ~100ms more than the delay of the relays to avoid too early switch and relay monitoring and thus false alarms.

- The requirements in Safety requirements for additional circuitry for SIL3/PL e page 48 shall be respected.

Monitoring

See on page 59.
Furthermore, if the N-Axis slave angle is not within the straight range given by P3909, then the operation state changes to 'safe state' and an error code is issued.

ON/OFF switch interface - Full electrical de-power/de-energize

De-powering the PVED-CLS and valve sub-systems by disconnection battery power supply will bring the system in a safe state.

The below architecture de-energizes the PVED-CLS and valve sub-systems by disconnecting any battery power to the PVED-CLS and valve sub-system.

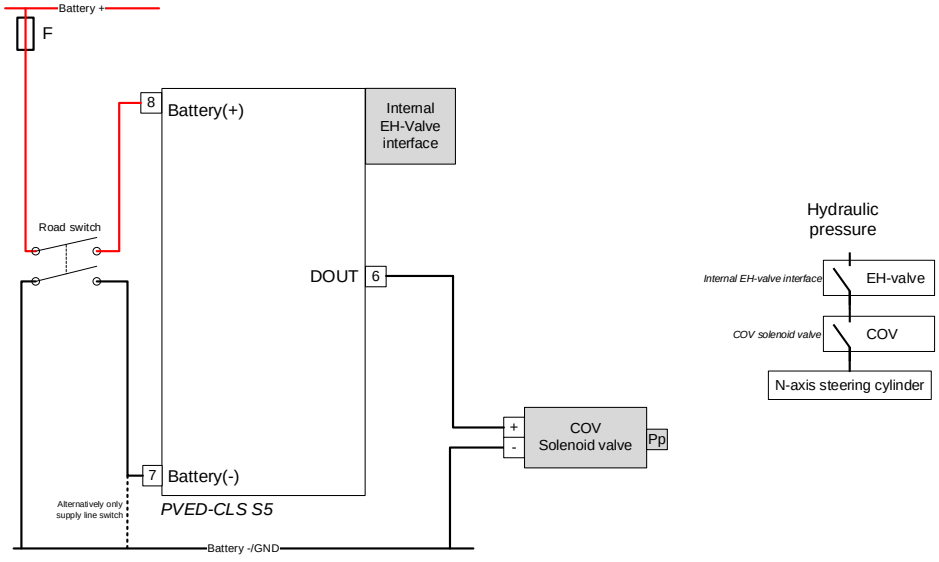

Figure 21 Full electrical de-power/de-energize

Important

The system integrator shall:

- Take responsibility for choosing reliable cables and switch/circuit breaking components.
- Regard the standards ISO25119, ISO 13849-2 appendix A and D, IEC 60947-5-1 and IEC 60204.
- Ensure that the road switch performs the safety function i.e. disconnecting battery power to AgPL/PL e.
- Ensure that the switch is suitable for the purpose and meets the target SIL.
- Perform an FMEA to address dangerous failures and common cause failure modes.
- Fault exclusion: On disconnecting battery power to the PVED-CLS and valves, both valves do not fail simultaneously. At least one valve will always block the EH steering flow to the cylinder.
- The EH-valve is tested at power-up and on-line when the PVED-CLS is used in off-road mode.
- The cut-off valve is tested intermittently on every PVED-CLS mode change to off-road functionality.
- The requirements in Safety requirements for additional circuitry for SIL3/PL e page 48 shall be respected.
- Refer to [PVED-CLS Technical Specification] for information on electrical characteristics for the PVED-CLS.

Zero-leakage valve configuration (option)

For applications which requires lower drift performance than the EHi-valve can provide, additional check-valves are required. This option is applicable to all Road-switch de-power / de-energize architectures described from page 41.

Background

Slow cylinder drift may build up after hours of use when no N-Axis closed-loop control is active, the valve spool is in neutral, the system is in the safe state or safe on-road mode.

The cylinder drift depends on the external pressure on the steered wheels (and thus the steering cylinder) due to the vehicle design or usage, the time the external force is applied, oil viscosity and the leakage properties of the EHi valve. The cylinder under pressure will build up a pressure on one of the valve cylinder ports. A small amount of oil will leak backwards in the valve either to tank or to the cylinder side which is not under pressure, and the cylinder piston may drift.

The maximum leakage for an EHi valve is 150mL/min @150bar cylinder port pressure at ~21cSt (Tellus, 50°C) [EHi steering valve technical information]. The specification is for when both the EHi main spool and the COV spool are in the closed position.

Cylinder leakage will result in rear-axis straight misalignment can result in increased tire wear. Leakage is not considered safety critical; it builds up slowly and is controllable from a vehicle steering perspective.

Pilot operated check valves

To address leakage, two pilot operated (PO) check valves (CV) shall be installed between each valve port (CL, CR) and cylinder port (L, R). The shock valves (protection components) shall be installed between the valve and the cylinder as shown in Figure 22.

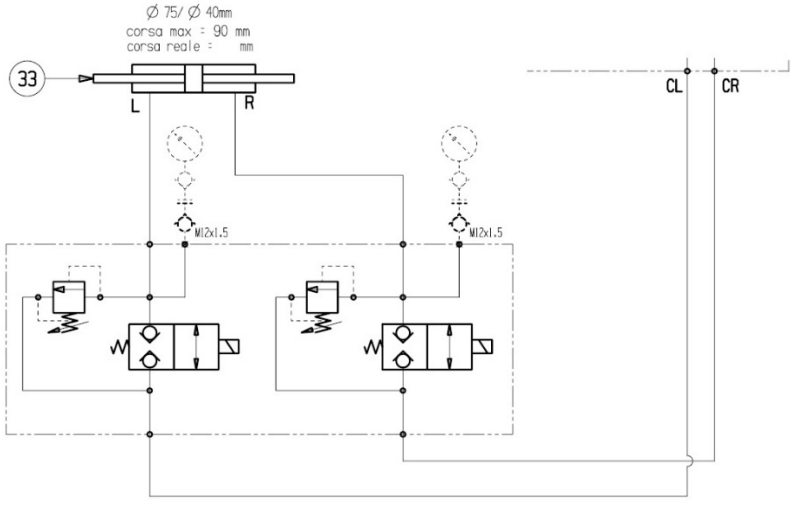

Figure 22 Check valve option for zero-leakage performance (drawing shall be reworked)

When the check valves are energized, the port flows are connected to the cylinder. De-energizing the check valves will hydraulically isolate the steering cylinder and only allow the leakage specified by the check valves (typically very small).
If one of the check valves are unintentionally de-energized, the steering cylinder cannot move which is considered a safe failure in N-Axis applications.

Architecture for zero-leakage performance

Figure 22 shows the additions to the architecture with the added PO check valves which, from a safety perspective, will act as additional cut-off valves to block EH-Flow to the cylinder.
The architectures

- ON/OFF switch interface - Active de-energize (immediate),
- ON/OFF switch interface - Active de-energize (automatic return to straight) and
- ON/OFF switch interface - Full electrical de-power/de-energize

with the additional check valve option in figure 7, also conform to a category 4 architecture and meet PL/AgPL e.
The zero-leakage option can also be combined with the ON/OFF switch interface - Full electrical de-power/de-energize architecture on page 45.

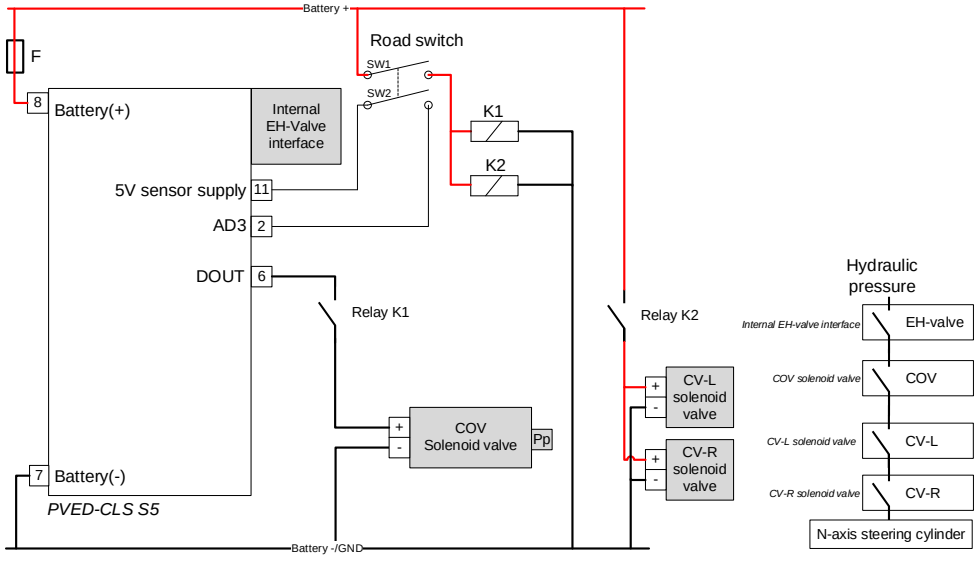

Figure 23 Active de-energize with zero-leakage option

Reliability block diagram

The Reliability block diagram in Figure 24 shows the involved safety related parts.

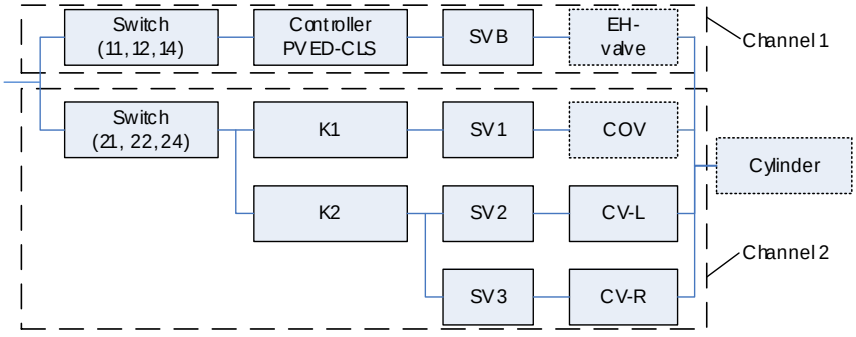

Figure 24 zero-leakage reliability block diagram

The requirements in Safety requirements for additional circuitry for SIL3/PL e page 48 must be followed.

The architecture is not fully in alignment with a standard category 4 architecture. For alignment with the category 4 template in ISO 13849 and ISO 25119, it is proposed to not include K2, SV2, SV3, CV-L and CV-R in the reliability calculation but however ensure that they fullfil the safety requirements to the channel.

Safety requirements for additional circuitry for SIL3/PL e

The following requirements shall be met to reach SIL3 according to IEC 61508 and AgPL/PL e in accordance with ISO 25119 and ISO 13849:

- Both channels shall meet SIL2
- The systematic capability (SC) of both channels shall be ≥ 2.
- Both channels work shall work in high demand mode.
- Channel 2 is of type B (complex).
- Channel 1 is of type A (non-complex).
- The channels shall be independent and diverse.
- A common cause analysis shall be performed.
- Equivalence mapping to ISO 25119 and ISO 13849 yields:
- Each channel shall meet an MTTFd ≥ 30 years.
- Each channel shall at least achieve AgPLd / PLd according to ISO 25119 and ISO 13849.
- The diagnostic coverage shall be ≥ 90 % for each channel.
- The safety function shall be performed in the presence of two undetected faults.
- The PVED-CLS works as a monitoring device for channel 1.
- To apply fault exclusion, the switch, relay, wiring and installation enclosure satisfies the standards ISO 13849-2 annex A and D IEC 60947-5-1 and IEC 60204.

Input - Sensor sub-system and monitoring

The PVED-CLS requires one or more sensor sub-systems to be present. This section describes the requirements to each sensor sub-system.

Warning

It is strongly recommended that the system integrator performs a System level Failure Mode Effects Analysis (FMEA) on the sub-systems and the system in its entireness.

N-Axis master - CAN interface

The N-Axis slave PVED-CLS interfaces to the N-Axis master controller which shall deliver the front axis steering angle. The below sub-system design supports realizing the N-Axis slave steering function designed to meet SIL2/PL d/AgPL d.

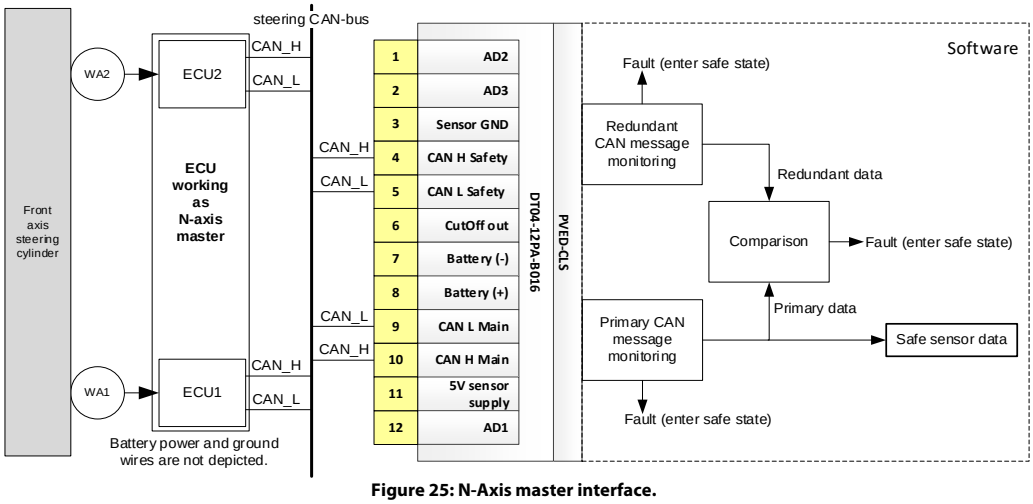

Figure 25: N-Axis master interface.

The N-Axis master shall work as a front axis sensor sub-system and transmit the front axis wheel angle onto the steering CAN bus.

Primary (WA1, ECU1) and redundant (WA2, ECU2) can be two independent channels which both acquire the N-Axis master steering angle or a dedicated controller can be employed such as the PVED-CLS working in N-Axis master mode (planned functionality).
ECU1 acquires the wheel angle via sensor element WA1, scales it and transmits the wheel angle data onto the CAN bus via a safe protocol as the Master Primary Message.
The same applies for ECU2 transmits the Master Redundant Message.

See [PVED-CLS MultiAxis-Steer communication protocol] for details on the vehicle master message protocol.

The functional safety requirement to ECU, working as N-Axis master, and front axis wheel angle sensor, is that is shall meet SIL2/AgPL/PL d. Alternatively the sub-system can be designed as two independent channels which shall both have a systematic capability of 1. This can be achieved if both channels meet QM/SIL1, are sufficiently independent and functionally diverse.
By applying the concept of 'synthesis of elements', a resulting systematic capability of 2 can be claimed accordance with safety standard IEC 61508 and thus meeting SIL2/AgPL/PL d requirements.

Attention

The master wheel angle signal is a critical signal for the majority of the safety functions.

The system integrator shall:

- Design and supply the N-Axis master sub-system.
- Ensure that the sub-system components are fit for the purpose.
- Conduct an FMEA to uncover dangerous failures.
- Implement measures against dangerous failures.
- Perform a CCF analysis.

- Document the sub-system as part of the safety case.
- Failing to supply the PVED-CLS with safe N-Axis master steering angle information will invalidate the functional safety concept.

CAN interface

The N-Axis slave PVED-CLS main controller receives the Master Primary message and the PVED-CLS safety controller receives the Master Redundant message.

Address	Name	Unit	Description of parameter
P3318	N-Axis Master Source Address	dec	N-Axis master source address
P3316	PGN offset of N-Axis master message	dec	N-Axis master PGN offset

Important

- The applied safety protocol allows omitting the CAN bus from the safety loop calculation as it contributes less than 1% of the safety integrity level.
- The applied safety protocol allows the presence of both safety and non-safety related CAN messages.
- P3316 shall be different in the main and safety controller as two CAN nodes are not allowed to have the same PGN.
- The sub-system shall begin transmitting CAN messages no later than 10 seconds after the PVED-CLS is powered.

Monitoring

The PVED-CLS provides monitoring functions for the N-Axis master sub-system.
For both Master Primary and Master Redundant message (see [PVED-CLS MultiAxis-Steer communication protocol], the following monitoring is in place in both the PVED-CLS main and safety controller:

- Receive timing check of CAN messages. Single failure leads to safe state.
- Sequence number check on CAN message. Single failure leads to safe state.
- End-to-end CRC on messages. Single failure leads to safe state.
- Data validity check (range check on wheel angle data). Single failure leads to safe state.
- Primary and redundant data are cross-checked as follows: If the absolute primary and redundant difference is > P3382 dDeg for more than P3380 ms, then enter safe state.

See [Diagnostic Trouble Codes] on page 96 for CAN bus diagnostic trouble codes related to detecting different failures on the vehicle speed sensor sub-system.

Address	Name	Unit	Description of parameter
P3382	Channel cross-check monitoring - Max N-axis master wheel angle difference	dDeg	Channel cross-check monitoring. Maximum master wheel angle divergence (dDeg).
P3380	Channel cross-check monitoring - Max N-axis' master wheel angle difference time	x10msec	Channel cross-check monitoring. Maximum master wheel angle divergence time [x10msec].
P3289	N-Axis master message monitoring - max time difference between two messages	x10mSec	N-Axis Master maximum message timeout [x10ms].

Important

- Setting the value for P3382, P3380 or P3289 too high will reduce the monitoring performance.
- The monitoring technique is based on a comparison and uses a reference sensor. A diagnostic coverage in the range 90-99% may be claimed provided that the sub-system is integrated according to the specification.
- Set value of P3289 to 1.5 · nominal transmission rate.
- Design the sensor sub-system channels to output as equal data as possible.
- Record vehicle speed sensor data in different scenarios and use simulation for optimum monitoring performance tuning.

Vehicle speed sensor – CAN interface

The architecture shows how the PVED-CLS can be used as part of a vehicle speed sub-system.

The sub-system design supports realizing safety function designed to meet SIL2/PL d/AgPL d by designing the sub-system to a category 3 architecture.

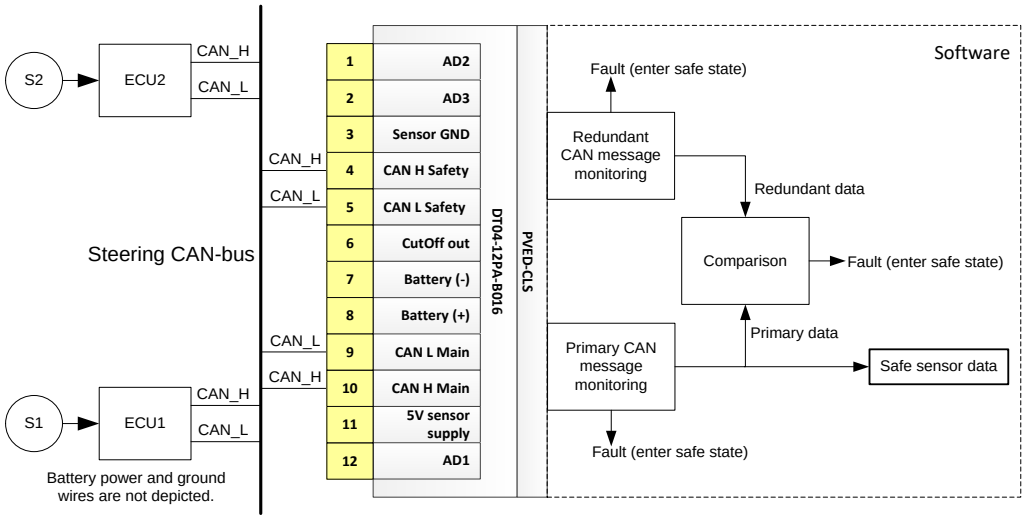

Figure 26: Vehicle speed sensor architecture.

Primary vehicle speed sensor (S1, ECU1) and redundant vehicle speed sensor (S2, ECU2) shall be two channels which both acquire the vehicle speed independently. The ECU1 acquires a speed signal via sensor element S1 and scales it to representing a vehicle speed. The vehicle speed data is transmitted onto the CAN bus via a safe protocol as the VSP primary message. The same applied for the redundant vehicle speed sensor, where ECU2 transmits the VSP redundant message.
See [PVED-CLS MultiAxis-Steer communication protocol] for details on the vehicle speed message protocol.

The functional safety requirements to the primary and redundant vehicle speed sensor is that both channels shall have a systematic capability of 1. This can be achieved if both channels meet QM/SIL1 and the channels are sufficiently independent and functionally diverse. By applying the concept of 'synthesis of elements', a resulting systematic capability of 2 can be claimed accordance with safety standard IEC 61508 and thus meeting SIL2/AgPL/PL d requirements.

Attention

The vehicle speed is a critical signal for the majority of the safety functions.

The system integrator shall:

- Design and supply the vehicle speed sub-system.
- Ensure that the sub-system components are fit for the purpose.
- Conduct an FMEA to uncover dangerous failures.
- Implement measures against dangerous failures.
- Perform a CCF analysis.
- Document the sub-system as part of the safety case.
- Failing to supply the PVED-CLS with safe vehicle speed information will invalidate the functional safety concept.

CAN interface

The PVED-CLS main controller receives the VSP primary message and the PVED-CLS safety controller receives the VSP redundant message.

Address	Name	Unit	Description of parameter
P3320	Vehicle speed sensor source address	dec	Vehicle speed sensor source address
P3313	PGN offset to vehicle speed sensor message	dec	Vehicle speed sensor PGN offset

Important

- The applied safety protocol allows omitting the CAN bus from the safety loop calculation as it contributes less than 1% of the safety integrity level.
- The applied safety protocol allows the presence of both safety and non-safety related CAN messages.
- P3313 shall be different in the main and safety controller as two CAN nodes are not allowed to have the same PGN.
- The sub-system shall begin transmitting CAN messages no later than 10 seconds after the PVED-CLS is powered.

Monitoring

The PVED-CLS provides monitoring functions for the vehicle speed sensor sub-system.
For both VSP primary and redundant message (see [PVED-CLS MultiAxis-Steer communication protocol] the following monitoring is in place in both the PVED-CLS main and safety controller:

- Receive timing check of CAN messages. Single failure leads to safe state.
- Sequence number check on CAN message. Single failure leads to safe state.
- End-to-end CRC on messages. Single failure leads to safe state.
- Data validity check (range check on vehicle speed data). Single failure leads to safe state.
- Range check on 'Direction indication'. A single instance of 'Error condition' leads to safe state.
- Note: Setting the 'Direction indication' to 'Information not available' is regarded as 'Forward'.
- The forward and reverse flags are cross-checked as follows: The 'Direction indication' field determines the sign of the vehicle speed data which is cross-checked.
- Primary and redundant data are cross-checked as follows: If the absolute primary and redundant difference is > P3358 km/h for more than P3357 ms, then enter safe state.

See [Diagnostic Trouble Codes] on page 96 for CAN bus diagnostic trouble codes related to detecting different failures on the vehicle speed sensor sub-system.

Address	Name	Unit	Description of parameter
P3358	Channel cross-check monitoring - Max vehicle speed divergence	kmph	Channel cross-check monitoring. Maximum vehicle speed divergence [km/h].
P3357	Channel cross-check monitoring - Max vehicle speed divergence time	x10msec	Channel cross-check monitoring. Maximum vehicle speed divergence time [x10msec].
P3287	Vehicle speed sensor message monitoring - Max time difference between two messages	x10msec	Maximum message timeout [x10ms].

Important

- Setting the value for P3358, P3357 or P3287 too high will reduce the monitoring performance.
- The monitoring technique is based on a comparison and uses a reference sensor. A diagnostic coverage in the range 90-99% may be claimed provided that the sub-system is integrated according to the specification.
- Set value of P3287 to 1.5 · nominal transmission rate.
- Design the sensor sub-system channels to output as equal data as possible.
- Record vehicle speed sensor data in different scenarios and use simulation for optimum monitoring performance tuning.

Man Machine Interface – CAN interface

The MMI sub-system shall acquire the system's or operator's request for different N-Axis steering modes. The MMI message contains:

- VAP and VAA which sets the N-Axis steering mode.
- A pre-configured wheel angle limit can be enabled/disabled by the MMI which will take priority over other wheel angle limitations in the N-Axis e.g. for special work scenarios or wheather conditions.

Address	Name	Unit	Description of parameter
P3920	Demanded left wheel angle limit on indication from MMI	deg	Demanded left wheel angle limit on indication from MMI

P3921	Demanded right wheel angle limit on indication from MMI	deg	Demanded right wheel angle limit on indication from MMI
P3926	Vehicle speed limit for Wheel angle limit on demand activation	Kmph	Wheel angle limit on demand activation based on Vehicle speed

The basic architecture assumes two MMI messages, one destined for the main controller and one for the safety controller. This architecture shall be used in architectures where the MMI message is part of the safety function and where faulty MMI data is not controlled or mitigated by the PVED-CLS.

A single MMI message may also be received by both the main and safety controller. In this case the N-Axis slave PVED-CLS is typically configured to limit and ramp the received MMI data in such a way that the requested N-Axis steering mode change is controllable for the driver.

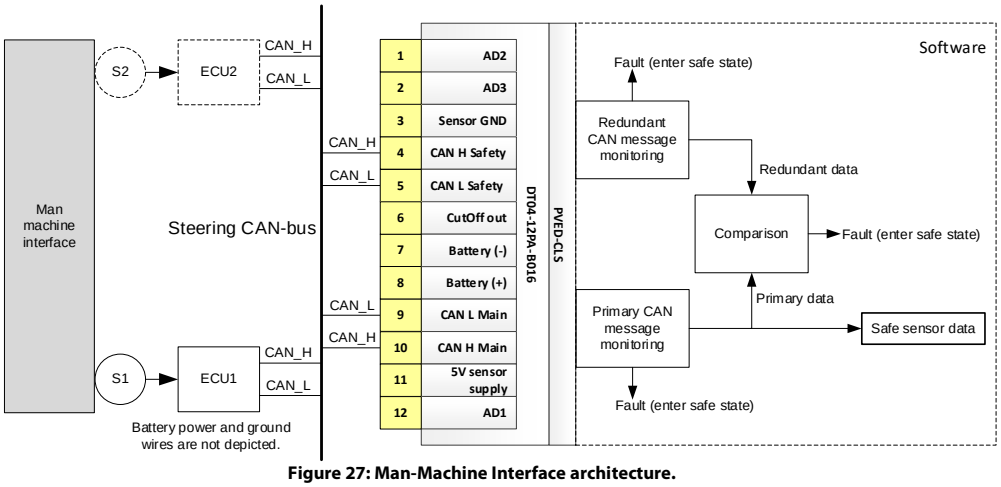

Figure 27: Man-Machine Interface architecture.

For implementing a sub-system which supports achieving an overall architecture category 3, primary MMI (S1, ECU1) and redundant MMI (S2, ECU2) are two channels which independently acquire the requested N-Axis steering mode. ECU1 acquires the desired steering mode via sensor element S1. The desired steering mode is transmitted onto the CAN bus via a safe protocol as the primary MMI message. The same applies for the redundant MMI, where ECU2 transmits the redundant MMI message. See [PVED-CLS MultiAxis-Steer communication protocol] for details on the MMI message protocol.

Attention

The system integrator shall:

- Design and supply the MMI sub-system.
- Ensure that the sub-system components are fit for the purpose.
- Conduct an FMEA to uncover dangerous failures.
- Implement measures against dangerous failures.
- Perform a CCF analysis.
- Document the sub-system as part of the safety case if it analyzed to be part of the safety function.
- Ensure that an unintended N-Axis steering mode change will not lead to an unsafe situation.

CAN interface

Address	Name	Unit	Description of parameter
P3321	MMI source address	dec	J1939 Source Address of the MMI
P3317	PGN offset to MMI message	dec	MMI message PGN offset

The PVED-CLS main controller receives the primary MMI message and the PVED-CLS safety controller receives the redundant MMI message. See [PVED-CLS MultiAxis-Steer communication protocol] for details on the MMI message protocol.

Attention

The applied safety protocol allows omitting the CAN bus from the safety loop calculation as it contributes less than 1% of the safety integrity level.
The applied safety protocol allows the presence of both safety and non-safety related CAN messages.
The sub-system shall begin transmitting CAN messages no later than 10 seconds after the PVED-CLS is powered.

Monitoring

The PVED-CLS provides monitoring functions for the MMI sub-system. For both primary and redundant message, the following monitoring is in place in both the PVED-CLS main and safety controller:

- Receive timing check of CAN messages. Nominal transmit rate is 500 ms. Time guard is fixed to 750 ms.
- Single receive timing failure leads to safe state.
- Sequence number check on CAN message. Single failure leads to safe state.
- End-to-end CRC on messages. Single failure leads to safe state.
- Data validity check (range check). Single failure leads to safe state.
- Primary and redundant steering mode requests are cross-checked as follows: If the absolute primary and redundant steering mode differ for more than P3374 ms, then enter safe state.
- See [PVED-CLS MultiAxis-Steer communication protocol] for CAN bus diagnostic trouble codes related to detecting different failures on the vehicle speed sensor sub-system.

Address	Name	Unit	Description of parameter
P3359	Channel cross-check monitoring - Max MMI command divergence time	x10msec	Channel cross-check monitoring. Maximum allowed time for which MMI steering mode requests are allowed to be different [x10ms]

Important

Setting the value for P3359 too high will reduce the monitoring performance.
If it is assessed that the MMI is part of the safety loop, then the monitoring technique for the category 3 architecture, is based on a comparison and uses a reference sensor. A diagnostic coverage in the range 90-99% may be claimed provided that the sub-system is integrated according to the specification.

Wheel Angle Sensor (WAS) – Analog interface

A dual channel analogue wheel angle sensor can be connected to the PVED-CLS when a high diagnostic performance is required for reaching the highest possible safety integrity level or performance level. The architecture shows how the PVED-CLS can be used as part of a wheel angle sensor (WAS) sub-system. The sub-system design supports realizing safety function designed to meet SIL2/PL d/AgPL d by designing the sub-system to a category 3 architecture.

Attention

The system integrator shall:

- Design and supply the wheel angle sensor sub-system.
- Ensure that the sub-system components are fit for the purpose.
- Conduct an FMEA to uncover dangerous failures.
- Implement measures against dangerous failures.

- Perform a CCF analysis.
- Document the sub-system as part of the safety case.

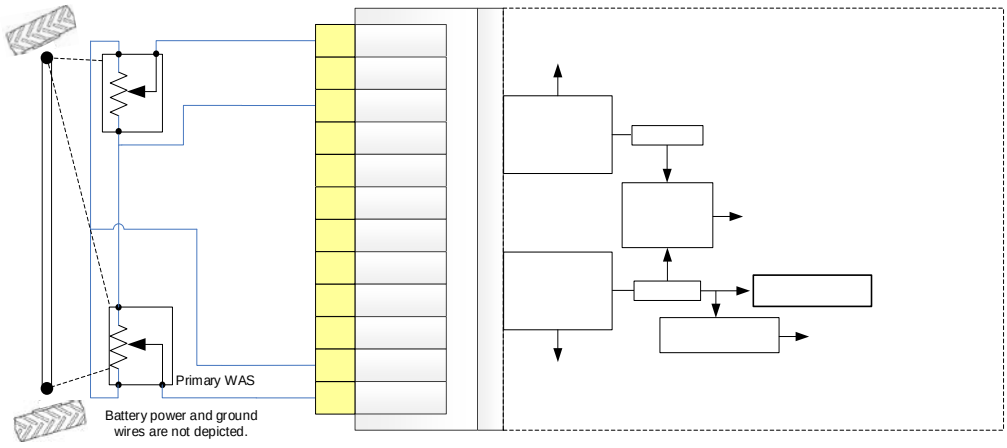

Figure 28: Dual channel analogue wheel angle sensor architecture.

Two independent single-channel WAS sensors or an integrated dual channel WAS shall be installed to measure the steered wheel angle or articulation angle of the vehicle.
The primary WAS and redundant WAS can be installed on the same kingpin or on each kingpin.

The main and safety controller receive, monitor and scale the input to the internal resolution range. The WAS can be supplied by any stabilized 5V supply or from the PVED-CLS 5V sensor supply. The PVED-CLS 5V sensor supply is internally monitored and adjusts for output drift and short-circuits faults.

Analogue interface

The WAS signal on AD1 and AD2 shall be in the range 500 mV to 4500 mV. The safety related parameters related to dual channel WAS are:

Address	Name	Unit	Description of parameter
P3240	Redundant WAS present	BOOL	Redundant WAS present. (0= Not present, 255 = Present (Default))
P3239	WAS interface	dec	WAS interface type. (0 = Analogue (Default), 1 = CAN)

Important

- The WAS steered angle-to-signal characteristic shall be mutually inverted/crossed for the PVED-CLS to monitor a common 5V sensor supply.
- The PVED-CLS cannot detect if a one WAS output is unintended connected to both AD1 and AD2. In this situation, the sub-system is not suitable as part of a category 3 architecture.
- Use independent sensor supply sources if WAS with non-inverted output characteristics are used.
- It is recommended that the steered wheel or articulation angle sensor resolution shall be better than 20°/V.
- The voltage representing straight shall be approximately in the middle of the achieved voltage range.

Monitoring

The PVED-CLS provides monitoring function for the WAS sub-system.

- Input range check
- WAS channel cross-check
- Micro-controller cross-check of scaled wheel angle
- Out of calibration check

Input range check

AD1 and AD2 input values below 100mV and above 4900mV are detected as short-circuit to ground and supply respectively.

WAS channel cross-check

The PVED-CLS will perform cross-check monitoring on the wheel angle signal from the primary and redundant wheel angle sensor. This check is performed in both micro-controllers.

Address	Name	Unit	Description of parameter
P3360	Channel cross-check monitoring - Max analogue sensor divergence (internal)	IR	Analogue sensor cross-check monitoring. Maximum analogue sensor divergence. Unit is internal resolution [IR] i.e. after scaling.

If the difference is greater than the threshold specified by P3360 for more than 100ms in one of the micro-controllers, safe state is triggered.

Micro-controller cross-check of scaled wheel angle

After the internal WAS channel cross-check, the primary wheel angle is scaled and cross-checked by the micro-controllers.

Address	Name	Unit	Description of parameter
P3351	Channel cross-check monitoring - Max wheel angle divergence time	x10msec	Channel cross-check monitoring. Maximum steering wheel angle divergence time [x10ms]
P3352	Channel cross-check monitoring - Max wheel angle divergence	IR	Channel cross-check monitoring. Maximum wheel angle divergence [IR]

If the difference is greater than the threshold specified by P3352 for more than P3351ms, safe state is triggered.

Important

Setting the value for P3360, P3351 or P3352 too high will reduce the monitoring performance.
The monitoring technique is based on a comparison and uses a reference sensor. A diagnostic coverage in the range 90-99 % may be claimed provided that the sub-system is integrated according to the specification.
Danfoss recommends setting P3351 to 100 ms for consistency to the fixed 100 ms WAS channel internal cross-check divergence time.

Danfoss recommends setting P3360 to 100 if a dual channel WAS is used on one kingpin.
If two single channel WASs are mounted on each kingpin, Danfoss recommends P3375 to be set 150 due to the difference in angles steering left and right, with reference to the turning point.
Record sensor data in different scenarios and use simulation for optimum monitoring performance tuning of P3375.

Out of calibration check

The out of calibration check is checking that the safe sensor data from the wheel angle sensor, is within the calibrated range added a threshold specified in the table below. The out of calibration check is testing if the safe sensor data from the wheel angle sensor is exceeding the nominal range. This may happen due to changes (wear, tear, stress) in the mechanical or electrical installation of the wheel angle sensor.

Address	Name	Unit	Description of parameter
P3369	Scaled Analogue sensor limit offset	IR	Maximum value which the safe sensor data from the wheel angle sensor is allowed to be out of the calibrated range [IR]

If the safe sensor data from the wheel angle sensor, is outside the calibrated range, by more than specified by P3369 for longer than 120 ms, safe state is triggered.

Wheel Angle Sensor (WAS) – CAN interface

The steered wheel angle can be supplied via the CAN bus. The principle is identical to having a dual analogue wheel angle sensor except that sampling the angle sensors is now performed by external controllers. The sampled values in mV are transmitted via a safe protocol.

The architecture shows how the PVED-CLS can be used as part of a CAN based wheel angle sensor sub-system. The sub-system design supports realizing safety function designed to meet SIL2/PL d/AgPL d by designing the sub-system to a category 3 architecture.

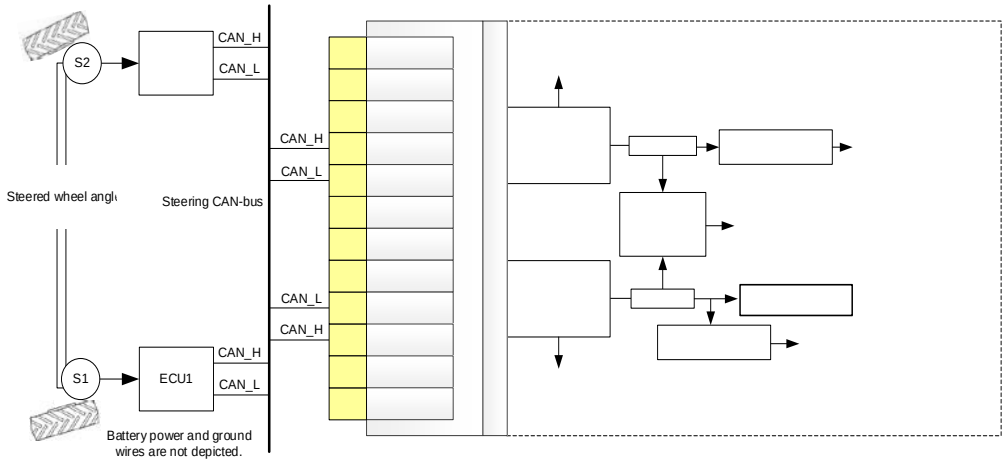

Figure 29: CAN based wheel angle sensor architecture.

S1 and S2 can be installed on the same kingpin or on separate kingpins.

Primary wheel angle sensor (S1, ECU1) and redundant wheel angle sensor (S2, ECU2) shall be two channels which both acquire the steered wheel angle. The ECU1 acquires the steered wheel position via sensor element S1 and scales it to a voltage. The voltage, representing a steered wheel angle, is transmitted onto the CAN bus via a safe protocol as the primary wheel angle sensor message. The same applies for the redundant wheel angle message, where ECU2 transmits the redundant wheel angle sensor message. See [PVED-CLS MultiAxis-Steer communication protocol] for details on the wheel angle sensor message protocol. The main and safety controller receive, monitor and scale the input to the internal resolution range.

Attention

The system integrator shall:

- Design and supply the steering wheel sensor sub-system.
- Ensure that the sub-system components are fit for the purpose.
- Conduct an FMEA to uncover dangerous failures.
- Implement measures against dangerous failures.
- Perform a CCF analysis.
- Document the sub-system as part of the safety case.

CAN interface

The PVED-CLS main controller receives the primary steering angle sensor message and the PVED-CLS safety controller receives the redundant steering angle message.

Address	Name	Unit	Description of parameter
P3239	WAS interface	dec	WAS interface type. (0 = Analogue (Default), 1 = CAN)
P3323	Wheel angle sensor source address	dec	Steering wheel angle sensor source address.

P3320	Vehicle speed sensor source address	dec	Steering wheel angle sensor PGN offset.

Important

- The applied safety protocol allows omitting the CAN bus from the safety loop calculation as it contributes less than 1% of the safety integrity level.
- The applied safety protocol allows the presence of both safety and non-safety related CAN messages.
- P3323 may be equal for both primary and redundant message if they are transmitted by one CAN node.
- For redundant WAS configurations P3323 for the main and safety controller shall be different.
- The sub-system shall begin transmitting CAN messages no later than 10 seconds after the PVED-CLS is powered.
- Single channel CAN based WAS configuration is not possible.
- The steered wheel or articulation angle sensor resolution shall be better than 0.023°/mV.

Monitoring

The PVED-CLS provides monitoring function for the WAS sub-system.

- Input range check
- Micro-controller WAS channel cross-check
- Out of calibration check

Input range check

WAS signal values below 100 and above 4900 are detected as short-circuit to ground and supply respectively.

Micro-controller WAS channel cross-check

The PVED-CLS will perform cross-check monitoring on the wheel angle signal from the primary and redundant wheel angle sensor by an internal micro-controller data exchange and comparison.

Address	Name	Unit	Description of parameter
P3352	Channel cross-check monitoring - Max wheel angle divergence	IR	Wheel angle sensor cross-check monitoring. Maximum wheel angle divergence. Unit is internal resolution [IR] i.e. after scaling.
P3351	Channel cross-check monitoring - Max wheel angle divergence time	x10msec	Channel cross-check monitoring. Maximum steering wheel angle divergence time [x10ms]
P3288	Wheel angle sensor message monitoring - Max time difference between two messages	x10mSec	Maximum message timeout [x10ms]

If the difference is greater than the threshold specified by P3352 for more than P3351 ms, safe state is triggered.

Important

- Set value of P3288 to 1.5 · nominal transmission rate.
- Setting the value for P3352, P3351 or P3288 too high will reduce the monitoring performance.
- The monitoring technique is based on a comparison and uses a reference sensor. A diagnostic coverage in the range 90-99 % may be claimed provided that the sub-system is integrated according to the specification.
- Danfoss recommends setting P3352 to 100 if a dual channel WAS is used on one kingpin.
- If two single channel WASs are mounted, one on each kingpin, Danfoss recommends P3352 to be set 150 due to the difference in angles steering left and right, with reference to the turning point.

- Record sensor data in different scenarios and use simulation for optimum monitoring performance tuning.

Out of calibration check

The out of calibration check is checking that the wheel angle read from both the primary and redundant wheel angle message, is within the calibrated range added a threshold which is specified in the table below. The out of calibration check is testing if the safe sensor data from the wheel angle sensor is exceeding the nominal range. This may happen due to changes (wear, tear, stress) in the mechanical or electrical installation of the wheel angle sensor.

Address	Name	Unit	Description of parameter
P3372	Wheel angle limit offset (CAN WAS)	IR	Maximum value which the primary and redundant wheel angle signal are allowed to be out of the calibrated range [IR]

If the wheel angle read from the primary or the redundant wheel angle message is out of the calibrated range by more that threshold specified by P3372 for more than 120 ms, safe state is triggered.

Output - Valve sub-system and monitoring

Sensor 5V DC power supply

The PVED-CLS can supply external sensors with a regulated 5V supply voltage. The voltage is internally monitored by a range check. The PVED-CLS enters the safe state if the voltage exceeds the monitored sensor voltage thresholds.
A diagnostic coverage of 60% can be claimed by the range check method. For a higher diagnostic coverage, use the 5V sensor supply for a two channel sensor with inverted characteristics and monitor the supply voltage indirectly by cross-checking the two sensor channels.
For more details refer to [PVED-CLS Technical Specification].

EHi Cut-off valve

The EHi-valve has an integrated cut-off valve (COV) which blocks the L and R steering flows to the steering cylinder. The COV is piloted by the COV solenoid valve which is opened by supplying power to the cut-off coil.
The COV spool has a dual function. In blocked state, it blocks L and R steering flow as well as hydraulic pilot pressure supply to the solenoid valve bridge (SVB).

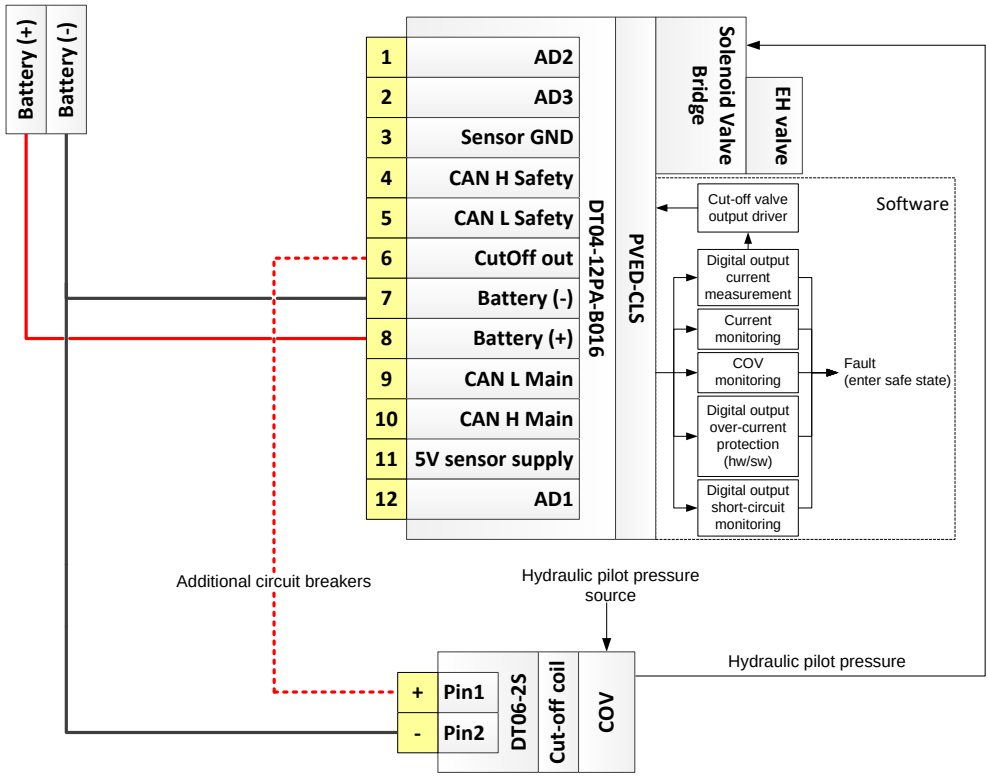

Figure 30: Cut-off valve architecture for OSPE, EHi-E and EHi-H valve sub-system.

Interface

The COV solenoid valve shall be connected to the monitored PVED-CLS high-side switch output (pin 6) and battery –(ground). It is recommended to establish the COV solenoid valve ground connection as close the PVED-CLS ground (pin 7) as possible to avoid voltage drops and current loops.

Configuration for EHi-E valve sub-systems

Cut-off valve related configuration parameters and recommended values, for systems using EHi-E valve sub-systems can be seen below.

Address	Name	Unit	Description of parameter
P3072	Cut-off valve present	BOOL	Cut-off valve present. (0 = not present (EHPS), 225 = present (default)(OSPE, EHi-E and EHi-H)) Note: For OSPE, EHi-E and EHi-H valve sub-systems, P3072 shall be 255 to achieve the maximum safety integrity.
P3073	Cut-off valve control mode	BOOL	Cut-off valve control mode. (0 = Open loop current control, 255 = Closed loop current control (default))
P3074	Cut-off valve CL pull current	mAmp	Cut-off valve pull current (closed-loop current control).
P3076	Cut-off valve CL hold current	mAmp	Cut-off valve hold current (closed-loop current control).
P3078	Cut-off valve monitoring POST timeout	x10mSec	Cut-off valve monitoring POST time-out. The COV check will fail if started and not succeeded within the set time-out period. Note: Setting P3078 = 0 will disable COV monitoring.
P3081	Valve type	dec	Valve type. (0 = OSPE or EHi-E (default)

P3093	Cut-off valve PWM pre-load value	%	Cut-off solenoid valve PWM preload. The current build-up can be preloaded when the solenoid valve is powered, this speeds up the time it takes to pull the armature. P3097 = 100 % is recommended for OSPE, EHi-E and EHi-H valve sub-systems.

Monitoring for EHi-E valve sub-systems

By utilizing the SVB and the EH-valve main spool position sensor, the following monitoring is achieved:

- Full-stroke testing of the COV.
- Full-stroke testing of the cut-off solenoid valve.

The test checks that the COV can enter blocked state. No EH-steering functionality is possible until the test has passed.

The COV solenoid valve and COV is tested every time the MMI commands the PVED-CLS from on-road mode into off-road mode. The monitoring function is designed to work in the full operational temperature range. The test is designed not to fail due to lack of pump pressure and will wait forever for the initial spool movement. As a consequence, a stuck closed Cut-Off spool will not be detected. In this case, the operator will notice that EH-Steering is not possible.

Some examples of test execution times, using oil type Tellus 32, are:

- Oil temp -25 °C (6000 cSt) results in test duration: ~6.0 s
- Oil temp -20 °C (4500 cSt) results in test duration: ~3.1 s
- Oil temp -10 °C (1700 cSt) results in test duration: ~1.3 s
- Oil temp 0 °C (761 cSt) results in test duration: ~0.7 s
- Oil temp 20 °C (203 cSt) results in test duration: ~0.6 s
- Oil temp 40 °C (75 cSt) results in test duration: ~0.6 s

Important

- The monitoring technique is based on an intermittent test pulse principle.
- A diagnostic coverage in the range 90-99 % may be claimed, provided that the sub-system is integrated according to the specification.

EHi-valve monitoring

The PVED-CLS has an integrated EH-valve main spool position sensor (LVDT-sensor) which is used for 1) closed-loop EH-valve main spool positioning and for 2) EH-valve main spool monitoring.

EH-valve main spool control principle

The main controller calculates a EH-valve main spool set-point every 10ms. The set-point is input to the Solenoid Valve Bridge (SVB) which pilots the EH-valve main spool towards the calculated spool set-point. The actual EH-valve main spool position is measured via the LVDT sensor and fed back to the software for closed-loop spool position control. When the spool position control error is zero the EH-valve main spool is kept at the set-point.

EH-valve main spool monitoring –EHi-E valve sub-systems

The principle of spool monitoring is depicted in Figure 31. The criterion for safe spool control is:

- The EH-valve main spool shall be within the mechanical neutral position threshold (P3086) when the SVB is de-energized.
- The spool is positioned at or less than the set-point (green dots) and
- The spool is positioned no further than the |set-point + spool monitoring max threshold (P3362)|.
- The spool monitoring max threshold range are marked with orange arrows.

A spool monitoring fault is detected when the EH-valve main spool position is in the red enclosed region for more than 'Spool out of control' tolerance time equal to 150 ms (P3363). At power-up, the initial tolerance time is 1000 ms (P3364). The Spool out of control tolerance time is oil viscosity dependent and will decrease and settle at P3363 ms as the spool dynamics reflects normal operation conditions. The tolerance time decline rate is determined by an initial tolerance time constant (P3366) and the observed spool dynamics measured over a 10 ms interval.

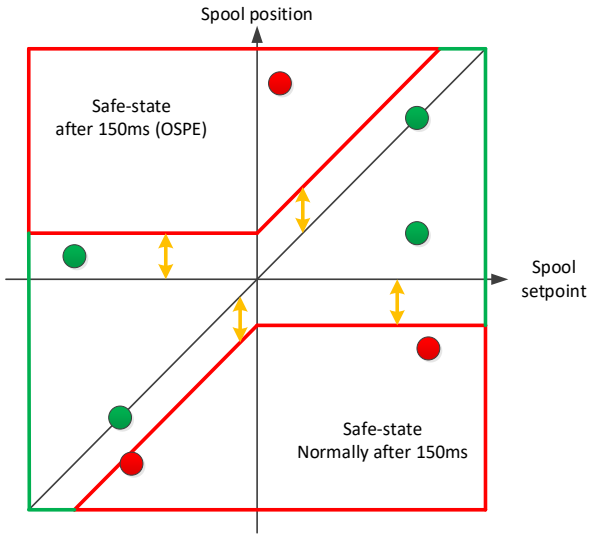

Figure 31 Spool monitoring

Address	Name	Unit	Description of parameter
P3362	Spool monitoring - Max difference between spool set-point and spool position	x10u Meter	Max difference between spool set-point and spool position
P3363	Spool monitoring - Min 'spool out of control' tolerance time	x10mSec	Minimum 'spool out of control' tolerance time
P3364	Spool monitoring - Max "spool out of control" tolerance time	x10mSec	Initial 'spool out of control' tolerance time
P3366	Spool monitoring - Confidence time decrease rate	dec	'Spool out-of control' time constant. The effective tolerance time is in the range given by P3379 and P3378.

Attention

Do not modify the above parameters.
Contact Danfoss PAE for questions to the above parameters.

Environmental control measures

The installation of the PVED-CLS is critical for the machine uptime. In order to respect the absolute stress ratings of the electronic components, the PVED-CLS must be carefully installed in an area with a known maximum ambient temperature.
The PCB ambient temperature is measured internally and is a sum of the ambient temperature of the PVED-CLS installation and the self-heating of the PVED-CLS.

Attention

The PVED-CLS must not be installed in areas where the ambient temperature exceeds 85°C.
Contact a Danfoss Product Application Engineer for further information.

For controlling common cause failure, the PVED-CLS features the following functions

- PCB overheating shut-down
- PCB average over-temperature warning

PCB overheating shut-down

Under normal operation the PVED-CLS must continuously measure the PCB temperature. If the PCB temperature exceeds 120 °C, the PVED-CLS enters safe state immediately.
For manufacture testing purposes only, it is possible to disable this function by setting the temperature severity level to INFO. Thereby the PVED-CLS will not to enter safe state if the PCB temperature exceeds 120 °C.

Address	Name	Unit	Description of parameter
P3371	Severity level for temperature monitoring	BOOL	Temperature severity level (0 = Severity level: Critical, 255 = Severity level: INFO)

Important

- It is strictly prohibited to set the temperature severity level to other than critical.
- Setting the temperature severity level to other than critical leads to immediate loss of warranty.

PCB average over-temperature warning

The PVED-CLS maintains a PCB temperature histogram to monitor the average PCB temperature over the PVED-CLS life-time. A J1939 DM1 Information message will be issue if the average temperature exceeds 85 °C. The PVED-CLS will continue operation while issuing the info CAN message.

Important

It is recommended that an external ECU is configured to listen the average over-temperature information. If observed the system integrator should consider revising the PVED-CLS installation environment.
The temperature histogram can be read out of memory by e.g. the PLUS+1® PVED-CLS service tool.

DC power supply

The PVED-CLS is designed to operate reliably at battery voltages between 11 and 35.5V. Protection circuitry ensures that the PVED-CLS electronics can withstand the absolute maximum voltage levels. Circuitry is in place to perform voltage control with safety shut-off to address over-voltage failure scenarios which could potentially lead to loss of safety functions.

Important

- If the power supply goes below 5.5V, the PVED-CLS will shut down without sending any warning.
- If the voltage goes below 9V, the PVED-CLS will stay in operation mode but send out an INFO level DTC.
- Note that below 9V the electro-hydraulic functions of an EHPS, EHi and OSPE may work at a reduced performance.
- In case the supply voltage exceeds 35.5V, a DTC is issued on the CAN bus, and the PVED-CLS will enter safe state.
- On detection of internal supply over-voltages, the power to the solenoid valve bridge and the cut-off solenoid valve will be switched off by discrete circuitry.

Experience shows that excessively low supply voltage may occur during engine cranking in cold conditions, depending on the state of battery charge, and/or general state of battery.

Refer to [PVED-CLS Technical Specification] for the absolute maximum electrical steady-state voltage levels.
See [Diagnostic Trouble Codes] on page 96 for details on error codes.

System set-up

Installation

PVED-CLS Connector interface

For a description of the connector interface of PVED-CLS – please refer to [PVED-CLS Technical Specification].

The PVED-CLS will only be available with connector variant: 12 pin Deutsch DT04-12PA-B016 connector.

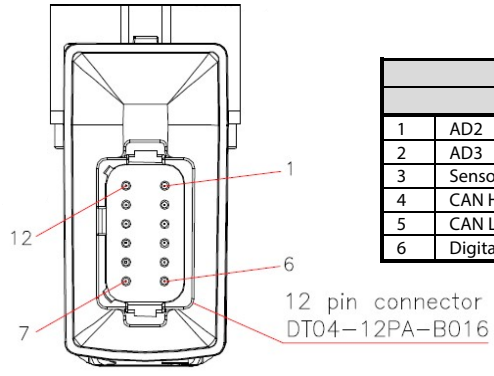

PVED-CLS Pinout			
Deutsch Connector			
1	AD2	7	Power ground (-)
2	AD3	8	Power supply (+)
3	Sensor power ground (-)	9	CAN Low MAIN
4	CAN High SAFETY	10	CAN High MAIN
5	CAN Low SAFETY	11	5V sensor supply (+)
6	Digital output	12	AD1

LED diagnostic

The PVED-CLS is equipped with a LED. The LED behavior will inform about the state of the PVED-CLS:

State	LED behavior
Main µC in the bootloader mode or Main µC detects the Safety µC in the bootloader mode	Blinking between orange and green
PVED-CLS is performing the initialization or is in the on-road mode (electro-hydraulic steering disabled)	Orange
PVED-CLS is in the Safe State and information about the detected failure is available on CAN bus	Blinking orange
PVED-CLS is in the off-road steering mode (N-Axis operational) and the spool is in its neutral position or PVED-CLS is in the service mode	Green
The coils supply switch is turned on and the spool is outside its dead-band	Blinking green
PVED-CLS is in the Safe State, but no information about the detected failure is available on CAN bus (e.g. the address arbitration has been lost or the Main µC built-in CAN controller failed to initialize or is unable to recover from the bus-off situation)	Red

Calibration

Straight heading calibration

This section is pending

System integration and testing

As specified in the safety-life cycle; after installation, integration or modification of the PVED-CLS, valve and other sensors, the system integrator or another representative for the OEM shall validate the installation, configuration and correct behavior before releasing the vehicle for series production.
System integration testing shall cover the fully integrated system including

- Hydraulic installation
- Mechanical installation including sensor installation
- Electrical installation and cable harness

- Software configuration
- Functional safety
- Interface to other sub-systems
- Systematic safety integrity of the safety channels

Warning

The system integration testing shall always be performed before start of production and after modification of the system.

For further information on validation consult IEC 61508, ISO 13849 or ISO 25119.

Vehicle Fault Insertion Testing

The functional safety provided by the PVED-CLS and valve may work differently from vehicle to vehicle as it may depend on factors such as configuration, vehicle geometry, valve size and cylinder volume. The system integrator is advised to perform fault insertion testing on the integrated system for failure modes where the system reaction to a fault cannot be predicted or simulated.

Contact Danfoss Power Solutions PAE for more information.

Safety validation testing

Validation is the final test of the functional safety before commissioning the system to the end. This safety validation test activity shall:

- Answer the question if the system is integrated correctly.
- Answer the question if the system is configured as specified.
- Answer the question if the system is working correctly.
- Achieve confidence in that the installation is performed correctly and that the specified functional safety is working as expected.

Contact Danfoss Power Solutions PAE for more information.

Service part handling and repair instruction

Attention

- Do not attempt to perform modifications or repair of the PVED-CLS or valve.
- Do not perform any unauthorized software download or modification of the PVED-CLS
- If the product is covered by the warranty then it shall be returned to Danfoss for inspection and root cause analysis
- Repairing a PVED-CLS shall be done by replacing it with a new unit.
- Perform safety validation of the PVED-CLS before commissioning into the target system/vehicle.
- The replaced PVED-CLS shall be decommissioned by e.g. adequately marking the part to avoid unintended installation to another vehicle or modifying the part so re-installation is never possible.

Refer to the [EHi steering valve technical information] for valve repair instructions.
Refer to the [PVED-CLS MultiAxis-Steer firmware release note] for PVED-CLS service part software operations.

Safety validation steps after replacing a PVED-CLS with a service part

Steps 1-2 may be performed before or after mounting the PVED-CLS to the steering valve.

1. Use the PLUS+1® service tool or read out the Identification data of the PVED-CLS.
2. Compare the following software elements to the customer drawing/specification
   a. Bootloader software version
   b. Main controller software version
   c. Safety controller software version
   d. Parameter sector CRCs for the following sectors

i. SVC (VPS)
ii. Hydraulic Configuration
iii. CAN Wheel Angle Sensor
iv. Analogue Wheel Angle Sensor
v. Peripherals Configuration
vi. Communication Protocol
vii. Internal Monitoring
viii. Vehicle Geometry
ix. N-axis Configuration
x. Auto-calibration

The sector CRCs for each sector shall match the CRCs on the customer drawing/specification.

1. Perform Wheel Angle Sensor and Spool calibration to complete the service part software configuration.
2. Refer to section System integration and testing on system validation after modification and repair.

Service Tool (detailed)

Appendix

Component identification via CAN bus

The following information identifies the PVED-CLS and valve assembly. The below sections explains the various methods to perform identification.

Valve assembly barcode label

The valve assembly barcode for the fully assembled valve unit number consists of the order number (8 digit number) and a serial number. The order number specified on the customer drawing, identifying the final valve assembly (valve, valve controller, software, parameters), is glued onto the valve assembly (OSP gear set) as well as stored electronically in the PVED-CLS on the following parameter addresses.

Parameter	Address	Format	Description
Sales order number byte 1	P4064	U8	Sales order number (8 digit number)
Sales order number byte 2-7	P4065-P4070		
Sales order number byte 8	P4071		
Sales order number byte 9-14	P4072-4077		Reserved

The data can be accessed by uploading the data in boot-loader mode. See [PVED-CLS KWP2000 protocol].

Bootloader and application software identification

The following electronic identification for the embedded software can be retrieved from the PVED-CLS via the CAN bus.

Identification data item	Format	Size (bytes)
Boot-loader software version	ASCII	39
Boot-loader program date	BCD	3
Application software version	ASCII	39
Application program date	BCD	3

The boot-load and application software and program date information is stored in flash memory and generated by Danfoss at compile time for the main and safety controller respectively. The data is accessible via the KWP2000 Read ECU Identification service. See [PVED-CLS KWP2000 protocol].

Example for main controller:

Boot-loader software version	**BOOT_CLS-_M_R385_KWP2000-_11153472_-rrr**
Boot-loader program date	13.03.15
Application software version	APP-_CLS-_M_R100_NAXIS---_11153340_-B02
Application program date	05.08.19

Sub-string ‘M’ means main controller. Sub-string ‘R198’ means release software version 1.98. Sub-string ‘11153340’ is a Danfoss part number for the main application software. ‘B02’ indicates the build number.
For the boot-loader software version ‘-rrr’ are reserved characters.

Example for safety controller:

Boot-loader software version	**BOOT_CLS-_M_R385_KWP2000-_11153472_-rrr**
Boot-loader program date	13.03.15
Application software version	APP-_CLS-_S_R100_NAXIS---_11153341_-B02
Application program date	05.08.19

Sub-string ‘S’ means safety controller. Sub-string ‘R100’ means release software version 1.00. Sub-string ‘11153341’ is a Danfoss part number for the safety application software. ‘B02’ indicates the build number.
For the boot-loader software version ‘-rrr’ are reserved characters.

PVED-CLS component identification and serial number

The PVED-CLS valve controller can be identified by a serial number which is stored in the PVED-CLS eeprom memory.

Parameter	Address	Format	Description
Danfoss serial number byte 1	P962		
Danfoss serial number byte 2-24	P963-985		
Danfoss serial number byte 25	P986	U8	PVED-CLS Serial number

The below example shows how the PVED-CLS serial number is encoded:

1	2	3	4	5	6	7	8	9	10	11	12	13	14	15	16	17	18	19	20	21	22	23	24	25
1	1	1	0	8	6	8	1	-	A	1	2	0	1	1	7	1	3	5	1	3	0	0	0	4
Part no.									Rev	Plant code				Line		Date (yywwd)					Serial no.			

The data can be accessed by uploading the data in boot-loader mode by the [PVED-CLS KWP2000 protocol].

PLUS+1 Service tool identification page

The software and hardware can also be uniquely identified via the PLUS+1® service tool page "Identification" in the Diagnostics group.

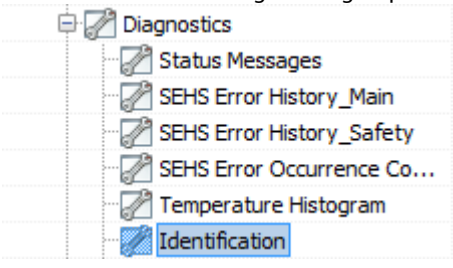

Example of the information on the Identification page:

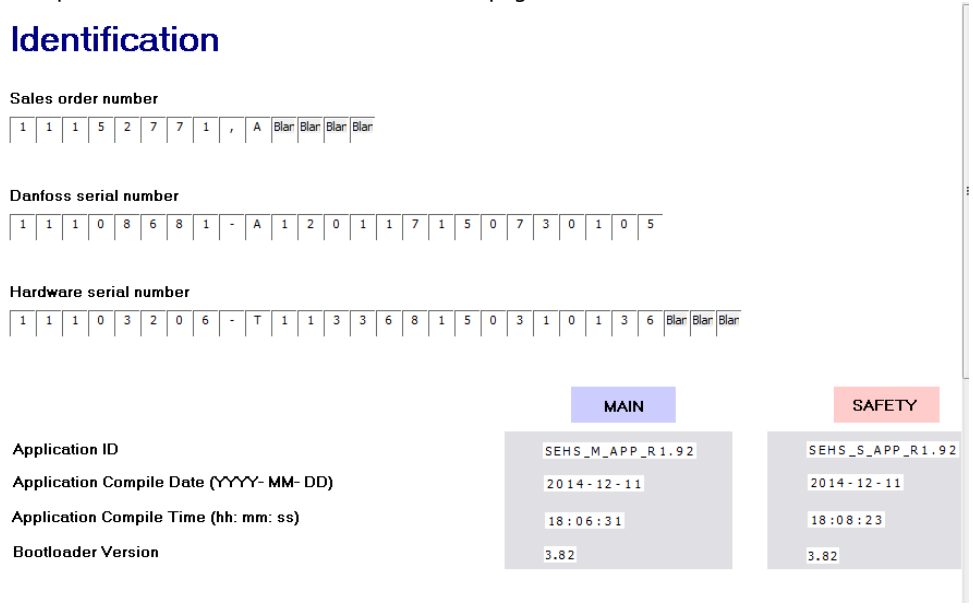

J1939 request PGN for software ID and component ID

The software identification and component identification can be retrieved by a request program group query for software identification (PGN 65242) and component identification (PGN 65259). The data can be queried while the PVED-CLS is in operation mode.

Requesting Software ID will return the same data as given in section TBD. Both the boot-loader software version and application software version is output in one Broadcast Announcement Message.

Requesting Component ID will return the same data as given in section TBD-

Example of data broadcasted by Component Identification BAM:

1	2	3	4	5	6	7	8	9	10	11	12	13	14	15	16	17	18	19	20	21	22	23	24	25	26	27	28
*	1	1	1	0	8	6	8	1	*	A	1	2	0	1	1	7	1	3	5	1	3	0	0	0	4	*	*

Refer to [PVED-CLS MultiAxis-Steer communication protocol] for details.

EEPROM parameters

The full parameter set is divided into sectors which are described below.

EEPROM layout

#	Sectors	Start Addr	End Addr	Sector Size (bytes)	Description	CRC protection	CRC calculation Start Addr	CRC calculation End Addr	CRC Addr	SIGNATURE Addr
0	Boot Data	0	19	20	BootNodeID, BootSWVersion, AppChksum etc. params	NO	0	13	-	-
1	Sector CRC Sign Data	20	69	50	Sector CRC Signature Data	NO	20	69	68	-
2	Device Identification	70	149	80	Component ID i.e. Product Code + Device Serial Number etc. info	YES	70	102	148	66
3	SVC Params	150	249	100	SVC Parameters	YES	150	210	248	20
4	Control Data	250	459	210	Spool_Max_A_Side, DBC_A_Side, Scaling, Limiting, Road-Flow Curves etc.	YES	250	292	458	26
5	Safety Data	460	529	70	Monitoring related params, Safety Controller Config Params etc.	NO	460	527	528	22
6	Protocol Data	530	599	70	Transmit repetition rate and Timeouts etc. config data	NO	530	565	598	28
7	Diagnostics Data-1	600	765	166	OccCounters etc.	NO	600	752	764	-
8	Diagnostics Data-2	766	849	84	Temperature Histogram	NO	766	835	848	-
9	Calibration Tables	850	961	112	LVDT Table etc	YES	850	931	960	24
10	SD Serial Number	962	999	38	SD serial number	YES	962	996	998	66
11	Diagnostics Data-3	1000	1691	692	Extended ErrorFIFO	NO	1000	1690	-	-
12	Diagnostics Data-4	1692	1741	50	Min, Max task timings	NO	1692	1740	-	-
13	Diagnostics Data-5	1742	2341	600	Error code occurance last and latest time stamps	NO	1742	2298	-	-
14	Reserved	2342	3071	730	Reserved for Platform	NO	2342	3071	-	-
15	Hydraulic Config	3072	3121	50	Hydraulic Config	YES	3072	3097	3120	40
16	Reserved	3122	3161	40	Reserved	NO	3122	3161	-	-
17	Valve Calibration Data	3162	3184	23	Valve Calibration Data	YES	3162	3171	3183	44
18	CAN WAS Calibration Data	3185	3204	20	CAN WAS Calibration Data	YES	3185	3196	3203	46
19	Analog Sensor Calibration Data	3205	3236	32	Analog Sensor Calibration Data	YES	3205	3226	3235	48
20	Peripherals Config	3237	3286	50	Peripherals Config	YES	3237	3245	3285	50
21	N-Axis Protocol Data	3287	3350	64	N-Axis Protocol Data	YES	3287	3325	3349	52
22	Internal Monitoring	3351	3420	70	Internal monitoring	YES	3351	3383	3419	54
23	Reserved	3451	3770	320	Reserved	NO	3421	3770	-	-
24	Production/Calibration Flag	3771	3790	20	Production/Calibration Flag	NO	3771	3776	3789	-
25	Auto Calibration Config	3791	3863	73	Auto Calibration Config	YES	3791	3851	3862	64
26	N-Axis	3864	4063	200	N-Axis	YES	3864	3926	4062	66
27	PLM metadata	4064	4209	146	Teamcenter engineering document numbers	NO	4064	4189	4208	-
28	OEM Data	4210	4311	102	OEM data	NO	4210	4311	-	

29	Reserved	4312	4391	80	Reserved	NO	4312	4391	-	

Note: Sectors with gray background ( ) are for internal purpose only and are not described in the manual

Safety parameterization

Parameterization or configuration is the process of modifying software parameters in EEPROM which can modify the behavior of the safety device.

Warning

- Modifying behavior includes changing or disabling a safety function or a monitoring function behavior or performance.
- Any parameterization of the PVED-CLS shall follow the be devised safety parameterization procedure.

The PVED-CLS support protocol services which enable the design of safe parameterization covering the channel; the service tool user, the service tool hardware and software, the communication channel and the PVED-CLS eeprom memory.

Safety parameterization procedure

Step	Description	Response/result
1	**Enter boot-loader mode** Set the PVED-CLS in boot-loader mode	PVED-CLS de-energizes all outputs (safe condition) and enables access to configuration memory.
2	**User identification** Enter the access level (Manufacturer, OEM or dealer) and the Parameter Sector Access Code (PSAC)	The user identifies him/her-self and request access rights to the sectors subject for modification. Failing to set the PSAC or unauthorized modification attempts will be detected and bring the PVED-CLS into the safe state on the subsequent power-up.
3	**Upload data** Upload the data for the sector which is subject for modification. Request uploading data in the diverse data format. Decode and display the data for both the main and safety controller in a diverse data format	The PVED-CLS returns all parameter values to the service tool as bit-wise inverted data. The diverse data enforces realization of a read-back and display method in the service tool which is diverse from the write procedure in step 4 and 5.
4	**Data modification** Modify one or more parameters in the sector and calculate the sector CRC value. Input values are entered as strings values (numbers and characters)	The data is encoded from string-to-hexadecimal values. The modified sector and sector CRC is stored in service tool memory.
5	**Download data** Download the modified sector and the associated sector CRC from service tool memory to both the main and safety controller memory	When downloading a new sector to the main and safety controller, the previous signature CRC becomes invalid. The PVED-CLS will be locked in the safe state until a correct signature CRC is created and downloaded to the PVED-CLS.
6	**Upload data** Upload the data for the sector which is subject for modification. Request uploading in diverse data format. Decode and display the data for both the main and safety controller as ascii characters	The PVED-CLS transmits all parameter values as bit-wise inverted data. The diverse data format enables the realization of a read-back and display method which is diverse from the write procedure in step 5.
7	**Data validation** The user shall inspect all parameter values in the sector	The user inspects that the data is correctly modified and that the other parameters in the sector are valid.
8	**User approval signature** The user approves the data in the sector by calculating the signature CRC. The signature	The PSAC for the modified sector is downloaded to the PVED-CLS configuration memory.

	CRC depends on the sector CRC and the entered PSAC	
9	**Reset** Reset or power-cycle the device for the changes to take effect	Safe parameterization is complete. The user shall validate the changes.

Important

- The service tool user closes the safety loop during parameterization i.e. a skilled user approves the parameter settings.
- Details on safe parameterization can be found in the PVED-CLS KWP2000 protocol and PVED-CLS Parameter Description.
- The PLUS+1® service tool for the PVED-CLS uses the safe parameterization procedure.
- Unauthorized changes will lead to a permanent safe state condition until the correct parameters are approved.

Contact Danfoss Power Solutions PAE for information on the OEM and Dealer PSAC.

Boot Data

Addr	Name	Type	Unit	Description	MIN	MAX	Default
P0	BL_APP_DOWNLOAD_CHECKSUM	U8	Hex	Checksum of Application that Boot-Loader calculates and stores after programming the device with valid application. Boot-loader uses this value at every boot-up for verifying whether a valid application is present in the device or not. So, this value shall NOT be modified by user at all.			00
P1	Reserved / Unused	U8	Hex	Reserved for use in Future.			00
P2	Network Node ID	U8	Hex	Reserved for use in Future.	0	255	00
P3	BOOT_NODE_ID	U8	Hex	Node-ID used by Boot-loader. Default value is 0x20. The actual valid range for this KWP2000 Node-ID is between {0x20 - 0x2F}.	0	255	20
P4	APP_TO_BOOT_FLG	U8	Hex	This EE location is used by the application to indicate which 'Diagnostic Session' is to be started in 'Boot-loader mode'; after 'Software-Reset' is performed from Application. ALWAYS Use a Default value of 0x00.	0	255	00
P5	BAUD_RATE	U16	dec	Initial Baud rate for Bootloader . Can be configured as 125K 250K 1000K Default = 250K	125	1000	250
P6	NEW_BAUD_RATE_FRM_APP	U16	dec	This Baud rate value is configured by application when START DIAGNO with baud rate change is Rxd in application. It get reseted in Bootloader. ALWAYS Use a Default value of 0x00.	0	1000	0
P7	BOOT_TO_APP_FLG	U8	Hex	This EE location is configured by the bootloader to indicate jump to application is due to STOP DIAGNO msg and application has to send positive response for the same msg. ALWAYS Use a Default value of 0x00.	0	255	00
P8	SAF_UC_IN_SYNC_WITH_MAIN_UC	U8	Hex	This EE location indicate SafeUC image is compatible with MainUC. This parameter is reset by bootloader while flashing new application. Application will set the values as follow 0x02 : Both Application and Bootloader compatible with MainUC. 0x01 : Bootloader is compatible but Application is not compatible with MainUC. 0x00 : Both Application and Bootloader not compatible with MainUC.	0	3	00
P9	SW_RESET_CONNECTED_TOOL_INFO	U8	Hex	Connected service tool information 0: Normal mode standard message tool 1: Mixed mode tool 2: Normal mode extended message tool 0xFF: Invalid tool (default)	0	255	FF
P10	SW_RESET_CONTED_TOOL_NODE_ID	U8	Hex	Connected KWP tool Node ID.	0	255	00
P11	KWP_DLC_VALIDATION_STATUS	U8	Hex	0: Optimized DLC 255: Frame Padding.	0	255	00
P14 - P19	U N U S E D						0

Important Parameters with gray background ( ) are internal and must not to be changed!

Sector CRC Sign Data

Addr	Name	Type	Unit	Description	MIN	MAX	Default
P20	SVC_PARAM_SECTOR_CRC_SIGN	U16	dec	This EE location is reserved to store the sector signature CRC. The signature CRC shall be calculated by the configuration tool. A correct CRC value is equivalent to approved parameter changes.	0	65535	2920
P22	SAFETY_DATA_SECTOR_CRC_SIGN	U16	dec	This EE location is reserved to store the sector signature CRC. The signature CRC shall be calculated by the configuration tool. A correct CRC value is equivalent to approved parameter changes.	0	65535	47848
P24	CALIB_TABLE_SECTOR_CRC_SIGN	U16	dec	This EE location is reserved to store the sector signature CRC. The signature CRC shall be calculated by the configuration tool. A correct CRC value is equivalent to approved parameter changes.	0	65535	13034
P26	CONTROL_DATA_SECTOR_CRC_SIGN	U16	dec	This EE location is reserved to store the sector signature CRC. The signature CRC shall be calculated by the configuration tool. A correct CRC value is equivalent to approved parameter changes.	0	65535	64557
P28	PROTOCOL_DATA_SECTOR_CRC_SIGN	U16	dec	This EE location is reserved to store the sector signature CRC. The signature CRC shall be calculated by the configuration tool. A correct CRC value is equivalent to approved parameter changes.	0	65535	44206
P30-P39	Reserved / Unused	U8	dec	-	0	255	00
P40	HYDRA_CONFIG_SECTOR_CRC_SIGN	U16	dec	This EE location is reserved to store the sector signature CRC. The signature CRC shall be calculated by the configuration tool. A correct CRC value is equivalent to approved parameter changes.	0	65535	7759
P42-P43	Reserved / Unused	U8	dec	-	0	255	0
P44	VALVE_CALIB_DATA_SECTOR_CRC_SIGN	U16	dec	This EE location is reserved to store the sector signature CRC. The signature CRC shall be calculated by the configuration tool. A correct CRC value is equivalent to approved parameter changes.	0	65535	15743
P46	CAN_WAS_DATA_SECTOR_CRC_SIGN	U16	dec	This EE location is reserved to store the sector signature CRC. The signature CRC shall be calculated by the configuration tool. A correct CRC value is equivalent to approved parameter changes.	0	65535	35804

Addr	Name	Type	Unit	Description	MIN	MAX	Default
P48	AN_SEN_DATA_SECTOR_CRC_SIGN	U16	dec	This EE location is reserved to store the sector signature CRC. The signature CRC shall be calculated by the configuration tool. A correct CRC value is equivalent to approved parameter changes.	0	65535	31598
P50	PERIPH_CONFIG_SECTOR_CRC_SIGN	U16	dec	This EE location is reserved to store the sector signature CRC. The signature CRC shall be calculated by the configuration tool. A correct CRC value is equivalent to approved parameter changes.	0	65535	43077
P52	NAXIS_PRTCL_DATA_SEC_CRC_SIGN	U16	dec	This EE location is reserved to store the sector signature CRC. The signature CRC shall be calculated by the configuration tool. A correct CRC value is equivalent to approved parameter changes.	0	65535	23939
P54	INTRNL_MONITOR_SECTOR_CRC_SIGN	U16	dec	This EE location is reserved to store the sector signature CRC. The signature CRC shall be calculated by the configuration tool. A correct CRC value is equivalent to approved parameter changes.	0	65535	22773

Hydraulic Config

Addr	Name	Type	Unit	Description	MIN	MAX	Default
P3072	Cut-off valve present	U8	BOOL	Cut-off Valve Present/Not Present Valid Values: 0 (NOT PRESENT); 255 (PRESENT)	0	255	255
P3073	Cut-off valve control mode	U8	BOOL	Cut-off Valve control mode Close loop Control or ON-OFF control Valid Values: 0 (ON-OFF control); 255 (Closed loop control)	0	255	255
P3074	Cut-off valve CL pull current	U16	mAmp	Current required to activate Cut-off valve	100	2000	1100
P3076	Cut-off valve CL hold current	U16	mAmp	Current required to maintain Cut-off in ON state	100	2000	500
P3078	Cut-off valve monitoring POST timeout	U16	x10mSec	Cut Off Valve Activation TimeOut for COV Monitoring feature while entering Off Road state. INFO: Setting this parameter to 0 will bypass off-road safety check	0	1000	900

Addr	Name	Type	Unit	Description	MIN	MAX	Default
P3080	Invert flow direction	U8	BOOL	Changes the direction of the requested flow Valid Values: 0 (NO, DEFAULT OSPE/EHi); 255 (YES, DEFAULT EHPS)	0	255	0
P3081	Valve type	U8	dec	PVED-CLS is attached to which type of valve? Valid Values: 0 (OSPE or EHi-E); 1 (EHPS); 2 (EHi-H)	0	2	0
P3082	Cylinder stroke volume	U16	ccm	Cylinder stroke volume. Acceptable values: 100-10000. Note -> Writing 65535 will force to use automatic adjusted cylinder stroke value	100	65535	500
P3084	Valve capacity	U8	lpm	EH valve size, defined in liters per minute	5	120	20
P3085	LVDT offset compensation Enable/Disable	U8	BOOL	LVDT Offset compensation Valid Values: 0 (DISABLE); 255 (ENABLE)	0	255	255
P3086	Absolute Spool neutral threshold range	U8	10 um (signed Dec)	Absolute value of Spool neutral threshold range	0	200	25
P3087	Max Spool pos left copy	SIGNED16	x10u Meter	Spool left most position copied from spool auto-calibration before the internal calculation of the sector CRC	-1000	0	0
P3089	Max Spool pos right copy	SIGNED16	x10u Meter	Spool right most position copied from spool auto-calibration before the internal calculation of the sector CRC	0	1000	0
P3091	Offset dead-band OL copy	SIGNED16	x10u Meter	Spool open loop dead-band offset copied from spool auto-calibration before the internal calculation of the sector CRC	0	150	0
P3093	Cut-off valve PWM pre-load value	U8	%	Cut-off valve PWM pre-load value	0	100	100

Addr	Name	Type	Unit	Description	MIN	MAX	Default
P3094	Timeout within which the wheels must get aligned straight before going from off road to OnRoad due to road switch position	U16	x10msec	This is the timeout within which the wheels must get aligned straight before going from off road to OnRoad state due to road switch position. After the timeout the Safestate will be triggered. If set to 0 self alignment is disabled	0	6500	0
P3096	Timeout within which the wheels must get aligned straight before in Pre-Safe state or in on road state	U16	x10msec	This is the timeout within which the wheels must get aligned straight before entering in Pre-Safe state or before entering on road state due to VSP. After the timeout the Safestate will be triggered.	100	6500	500
P3098-P3119	UNUSED						0
P3120	HYDRA_CONFIG_SECTOR_CRC	U16	dec	This EE location is reserved to store CRC Application calculates sector CRC if new .eep file is downloded. Application verifies the sector CRC value at every boot-up, to check the EEPROM sector data is valid or not. This value shall NOT be modified by user at all.	0	65535	29767

Valve Calibration Data

Addr	Name	Type	Unit	Description	MIN	MAX	Default
P3162	Max spool position, left	SIGNED16	x10u Meter	Spool left most position	-1000	-300	-420
P3164	Max spool position, right	SIGNED16	x10u Meter	Spool right most position	300	1000	420
P3166	Closed loop dead-band edge, left	SIGNED16	x10u Meter	Spool Close Loop left dead-band edge	-300	0	-105
P3168	Closed loop dead-band edge, right	SIGNED16	x10u Meter	Spool Close Loop right dead-band edge	0	300	105
P3170	Open loop dead-band edge offset	SIGNED16	x10u Meter	Spool Open Loop dead-band offset	0	150	25
P3172-P3182	UNUSED						0
P3183	VALVE_CALIB_DATA_SECTOR_CRC	U16	dec	This EE location is reserved to store CRC Application calculates sector CRC if new .eep file is downloaded. Application verifies the sector CRC value at every boot-up, to check the EEPROM sector data is valid or not. This value shall NOT be modified by user at all.	0	65535	63796

CAN WAS Calibration Data

Addr	Name	Type	Unit	Description	MIN	MAX	Default
P3185	WAS max left position (CAN)	U16	mVolts	Wheel angle sensor voltage output for leftmost position over CAN	0	5000	500
P3187	WAS max right position (CAN)	U16	mVolts	Wheel angle sensor voltage output for rightmost position over CAN	0	5000	4500
P3189	WAS neutral position (CAN)	U16	mVolts	Wheel angle sensor voltage output for neutral position over CAN	0	5000	2500
P3191	Automatically adjusted cylinder stroke volume (CAN WAS)	U16	ccm	Automatic adjusted cylinder stroke volume, for using CAN WAS, found during WAS auto-calibration	100	65535	65535
P3193	Automatically adjusted maximum steer angle to left side (CAN WAS)	U16	Deg	Automatic adjusted maximum steer angle to left side, for using CAN WAS, found during WAS auto-calibration	0	65535	65535
P3195	Automatically adjusted maximum steer angle to right side (CAN WAS)	U16	Deg	Automatic adjusted maximum steer angle to right side, for using CAN WAS, found during WAS auto-calibration	0	65535	65535
P3197-P3202	UNUSED						0
P3203	CAN_WAS_DATA_SECTOR_CRC	U16	dec	This EE location is reserved to store CRC Application calculates sector CRC if new .eep file is downloaded. Application verifies the sector CRC value at every boot-up, to check the EEPROM sector data is valid or not. This value shall NOT be modified by user at all.	0	65535	41488

Analog Sensor Calibration Data

Addr	Name	Type	Unit	Description	MIN	MAX	Default
P3205	Primary analogue sensor max left position	U16	mVolts	Primary analogue sensor voltage output for leftmost position	0	6000	500
P3207	Primary analogue sensor max right position	U16	mVolts	Primary analogue sensor voltage output for rightmost position	0	6000	4500
P3209	Primary analogue sensor neutral position	U16	mVolts	Primary analogue sensor voltage output for neutral position	0	6000	2500
P3211	Redundant analogue sensor max left position	U16	mVolts	Redundant analogue sensor voltage output for leftmost position	0	6000	500
P3213	Redundant analogue sensor max right position	U16	mVolts	Redundant analogue sensor voltage output for rightmost position	0	6000	4500
P3215	Redundant analogue sensor neutral position	U16	mVolts	Redundant analogue sensor voltage output for neutral position	0	6000	2500
P3217	5V sensor supply for primary analogue sensor during calibration	U16	mVolts	Measured Supply voltage during calibration of the primary analogue sensor	4650	5350	5000
P3219	5V sensor supply for redundant analogue sensor during calibration	U16	mVolts	Measured Supply voltage during calibration of the redundant analogue sensor	4650	5350	5000
P3221	Automatically adjusted cylinder stroke volume (analogue WAS)	U16	ccm	Automatic adjusted cylinder stroke volume, for using analogue WAS, found during WAS auto-calibration	100	65535	65535
P3223	Automatically adjusted maximum steer angle to left side (analogue WAS)	U16	Deg	Automatic adjusted maximum steer angle to left side, for using analogue WAS, found during WAS auto-calibration	0	65535	65535
P3225	Automatically adjusted maximum steer angle to right side (analogue WAS)	U16	Deg	Automatic adjusted maximum steer angle to right side, for using analogue WAS, found during WAS auto-calibration	0	65535	65535
P3227-P3234	UNUSED						0
P3235	AN_SEN_DATA_SECTOR_CRC	U16	dec	This EE location is reserved to store CRC Application calculates sector CRC if new .eep file is downloded. Application verifies the sector CRC value at every boot-up, to check the EEPROM sector data is valid or not. This value shall NOT be modified by user at all.	0	65535	44044

Peripherals Config

Addr	Name	Type	Unit	Description	MIN	MAX	Default
P3237	Road switch present (connected to AD3)	U8	BOOL	Specifies whether the road switch is or is no present, i.e. connected to the analogue input AD3 Valid Values: 0 (NOT PRESENT); 255 (PRESENT)	0	255	255
P3238	Max COV connection test current	U8	mAmp	The max. current allowed to be observed during the cut-off solenoid valve connection test.	10	255	100
P3239	WAS interface	U8	dec	Wheel Angle Sensor Interface Type Valid Values: 0 (ANALOGUE); 1 (CAN);	0	1	0

Addr	Name	Type	Unit	Description	MIN	MAX	Default
P3240	Redundant WAS present	U8	BOOL	Redundant Wheel Angle Sensor Present/Not Present Valid Values: 0 (NOT PRESENT); 255 (PRESENT)	0	255	255
P3241	Voltage compensation for Primary analogue sensor	U8	BOOL	Supply voltage compensation Enable/Disable for processing primary Analogue sensor signal Valid Values: 0 (DISABLE); 255 (ENABLE)	0	255	255
P3242	Voltage compensation for Redundant analogue sensor	U8	BOOL	Supply voltage compensation Enable/Disable for processing redundant analogue sensor signal Valid Values: 0 (DISABLE); 255 (ENABLE)	0	255	255
P3243	Generation of 5V sensor supply voltage (Deutsch connector pin 11)	U8	dec	Sensor Supply Test. Disable/enable the internal 5V supply on the PVED-CLS' pin 11. Valid Values: 0 (Enable); 1 (Disable) Note: Should be kept at Enable (P3248 set to 0) all time	0	1	0
P3244	AD low pass filter cut-off frequency	U8	dHz	5V sensor, AD1 and AD2 filter cut-off frequency Resolution: 1 dHz = 0.1 Hz	5	200	100
P3245	Total Number of n-Axis nodes	U8	dec	Total Number of N-Axis nodes	1	4	1
P3246-P3284	UNUSED						0
P3285	PERIPH_CONFIG_SECTOR_CRC	U16	dec	This EE location is reserved to store CRC Application calculates sector CRC if new .eep file is downloded. Application verifies the sector CRC value at every boot-up, to check the EEPROM sector data is valid or not. This value shall NOT be modified by user at all.	0	65535	34022

N-Axis Protocol Data

Addr	Name	Type	Unit	Description	MIN	MAX	Default
P3287	Vehicle speed sensor message monitoring - Max time difference between two messages	U8	x10msec	Vehicle speed sensor message monitoring - max time difference between two messages	10	255	15
P3288	Wheel angle sensor message monitoring - Max time difference between two messages	U8	x10mSec	Wheel Angle Sensor message monitoring - Max time difference between two messages	2	255	8
P3289	N-Axis master message monitoring - max time difference between two messages	U8	x10mSec	Master message timeout	10	255	10
P3290	N-Axis previous node's master message monitoring - max time difference between two messages	U8	x10mSec	Previous node's master wheel angle limit message timeout	10	255	10
P3291	Transmission rate - Operation Status Messages	U8	x10mSec	Default transmission rate of the Operation Status Messages	1	254	10
P3292	Transmission rate - Status message 1	U8	x10mSec	Default transmission rate of the Status Message 1	0	255	0
P3293	Transmission rate - Status message 2	U8	x10mSec	Default transmission rate of the Status Message 2	0	255	0
P3294	Transmission rate - Status message 3	U8	x10mSec	Default transmission rate of the Status Message 3	0	255	0

Addr	Name	Type	Unit	Description	MIN	MAX	Default
P3295	Transmission rate - Status message 4	U8	x10mSec	Default transmission rate of the Status Message 4	0	255	0
P3296	Transmission rate - Status message 5	U8	x10mSec	Default transmission rate of the Status Message 5	0	255	0
P3297	Transmission rate - Status message 6	U8	x10mSec	Default transmission rate of the Status Message 6	0	255	0
P3298	Transmission rate - Status message 7	U8	x10mSec	Default transmission rate of the Status Message 7	0	255	0
P3299	Transmission rate - Status message 8	U8	x10mSec	Default transmission rate of the Status Message 8	0	255	0
P3300	Transmission rate - Status message 9	U8	x10mSec	Default transmission rate of the Status Message 9	0	255	0
P3301	Transmission rate - N-Axis master wheel angle limit message	U8	x10mSec	Default transmission rate of master wheel angle limit message	0	255	0
P3302	Transmission rate - N-Axis master message	U8	x10mSec	Default transmission rate of master message	0	255	1
P3303	PGN offset to operation status messages	U8	dec	PGN offset to Operation Status messages	0	255	32
P3304	PGN offset to status message 1	U8	dec	PGN offset to Status message 1	0	255	33
P3305	PGN offset to status message 2	U8	dec	PGN offset to Status message 2	0	255	34
P3306	PGN offset to status message 3	U8	dec	PGN offset to Status message 3	0	255	35
P3307	PGN offset to status message 4	U8	dec	PGN offset to Status message 4	0	255	36
P3308	PGN offset to status message 5	U8	dec	PGN offset to Status message 5	0	255	37
P3309	PGN offset to status message 6	U8	dec	PGN offset to Status message 6	0	255	38
P3310	PGN offset to Status message 7	U8	dec	PGN offset to Status message 7	0	255	39
P3311	PGN offset to Status message 8	U8	dec	PGN offset to Status message 8	0	255	40
P3312	PGN offset to Status message 9	U8	dec	PGN offset of status message 9	0	255	41
P3313	PGN offset to vehicle speed sensor message	U8	dec	PGN offset to Vehicle speed message	0	255	64
P3314	PGN offset to wheel angle sensor messages	U8	dec	PGN offset to Wheel Angle Sensor messages	0	255	18
P3315	PGN offset of N-Axis master wheel angle limit message	U8	x10mSec	PGN offset of master wheel angle limit message	0	255	42
P3316	PGN offset of N-Axis master message	U8	dec	PGN offset of master message	0	255	44
P3317	PGN offset to MMI message	U8	dec	PGN offset to MMI message , when using Proprietary B message format	0	255	66
P3318	N-Axis Master Source Address	U8	dec	Source address of master	0	253	19
P3319	N-Axis Previous Node Source Address	U8	dec	Source address of N-Axis' previous node. This value is needed to be set in case number of slaves is grater than 1	0	255	0
P3320	Vehicle speed sensor source address	U8	dec	J1939 Source Address of the vehicle speed sensor	0	253	251

Addr	Name	Type	Unit	Description	MIN	MAX	Default
P3321	MMI source address	U8	dec	J1939 Source Address of the MMI	0	253	252
P3322	PVED-CLS source address	U8	dec	J1939 Source Address of the PVED	0	253	20
P3323	Wheel angle sensor source address	U8	dec	J1939 Source Address of the wheel angle sensor	0	253	250
P3324	PVED-CLS address claim - Function instance	U8	dec	Function instance field in Address calim message	0	32	0
P3325	CAN message priority of operational status message	U8	BOOL	CAN message priority of operational status message Valid Values: 0 (CAN message priority 6) 255 ((CAN message priority 3)	0	255	0
P3326-P3348	UNUSED						0
P3349	NAXIS_PRTCL_DATA_SEC_CRC	U16	dec	This EE location is reserved to store CRC Application calculates sector CRC if new .eep file is downloded. Application verifies the sector CRC value at every boot-up, to check the EEPROM sector data is valid or not. This value shall NOT be modified by user at all.	0	65535	45750

Internal Monitoring

Addr	Name	Type	Unit	Description	MIN	MAX	Default
P3351	Channel cross-check monitoring - Max wheel angle divergence time	U8	x10msec	Maximum allowable time for which wheel angle readings between MAIN and SAFETY micro-controllers are allowed to be out of specified value	0	255	10
P3352	Channel cross-check monitoring - Max wheel angle divergence	U16	IR	Max allowable wheel angle reading difference between MAIN and SAFETY micro-controllers	0	2000	100
P3354	Channel cross-check monitoring - Max calc flow command divergence time	U8	x10msec	Maximum allowable time for spool position set-point between MAIN and SAFETY micro-controllers are allowed to be out of specified value	0	255	10
P3355	Channel cross-check monitoring - Max calc flow command divergence	U16	IR	Max allowable flow command difference in IR between MAIN and SAFETY micro-controllers	0	2000	100
P3357	Channel cross-check monitoring - Max vehicle speed divergence time	U8	x10msec	Maximum allowable time for which vehicle speed readings between MAIN and SAFETY micro-controllers are allowed to be out of specified value	0	255	10
P3358	Channel cross-check monitoring - Max vehicle speed divergence	U8	kmph	Max allowable vehicle speed reading difference between MAIN and SAFETY micro-controllers	0	100	5
P3359	Channel cross-check monitoring - Max MMI command divergence time	U8	x10msec	Maximum allowable time for which MMI Flag readings between MAIN and SAFETY micro-controllers are allowed to be different	0	255	10

Addr	Name	Type	Unit	Description	MIN	MAX	Default
P3360	Channel cross-check monitoring - Max analogue sensor divergence (internal)	U16	IR	Max allowed difference between analogue sensors values measured by primary and redundant analogue sensors	0	2000	50
P3362	Spool monitoring - Max difference between spool set-point and spool position	U8	x10u Meter	Max allowed difference between Spool set-point and actual spool position used for Spool monitoring algorithm	0	200	80
P3363	Spool monitoring - Min 'spool out of control' tolerance time	U8	x10mSec	Minimum timeout value used by spool monitoring algorithm	1	75	15
P3364	Spool monitoring - Max "spool out of control" tolerance time	U16	x10mSec	Maximum timeout value used by spool monitoring algorithm	100	400	100
P3366	Spool monitoring - Confidence time decrease rate	U16	dec	Spool Monitoring time constant	0	60000	8000
P3368	Channel cross-check monitoring - Max road switch position divergence time	U8	x10mSec	Timeout value for Safe ON-ROAD switch position, cross check between MAIN- and SAFETY-controller. Resolution: 1 x10mSec = 10ms	0	255	10
P3369	Scaled Analogue sensor limit offset	U16	IR	The analogue sensor output conversions to internal resolution [IR] based on the calibration parameters is clamped to ±1000, but internally it is checked that the un-clamped analogue sensor signal does not exceed the range: (-1000 – P3384 [IR]) < "un-clamped analogue sensor signal" <(1000 + P3384 [IR])	0	1000	50
P3371	Severity level for temperature monitoring	U8	BOOL	Severity Level for temperature monitoring Valid Values: 0 (Severity level: Critical) 255 (Severity level: INFO)	0	255	0
P3372	Wheel angle limit offset (CAN WAS)	U16	IR	The CAN Wheel angle sensor output conversions to internal resolution [IR] is limited to ±1000 IR, based on the calibration parameters. But internally it is checked that the un-clamped CAN Wheel angle sensor signal does not exceeds the range: (-1000 – P3390 [IR]) < "un-clamped analogue sensor signal" <(1000 + P3390 [IR])	0	1000	50
P3374	Channel cross-check monitoring - Max WAS auto-calibrated cylinder stroke volume difference	U16	ccm	Maximum WAS Auto-calibrated Cylinder Stroke Volume Difference	1	10000	50
P3376	Channel cross-check monitoring - Max WAS auto-calibrated wheel angle difference	U8	deg	Maximum WAS Auto-calibrated wheel angle Difference	1	89	3
P3377	Channel cross-check monitoring - Max N-axis' virtual axis angle difference time	U8	x10msec	Max time allowed for N-Axis' Virtual Axis Angle difference	10	255	10
P3378	Channel cross-check monitoring - Max N-axis' virtual axis position difference time	U8	x10msec	Max time allowed for N-Axis' Virtual Axis Position difference	10	255	10
P3379	Channel cross-check monitoring - Max N-axis' master wheel angle limit difference time	U8	x10msec	Max time allowed for N-Axis' calculated (for n=1) or received (for n>1) master wheel angle limit difference	10	255	10

Addr	Name	Type	Unit	Description	MIN	MAX	Default
P3380	Channel cross-check monitoring - Max N-axis' master wheel angle difference time	U8	x10msec	Max time allowed for N-Axis' master wheel angle difference	10	255	10
P3381	Channel cross-check monitoring - Max N-axis master wheel angle limit difference	U8	dDeg	Max difference allowed for calculated (for n=1) or received (for n>1) master wheel angle limit	0	50	20
P3382	Channel cross-check monitoring - Max N-axis master wheel angle difference	U8	dDeg	Max difference allowed for master wheel angle	0	50	20
P3383	Channel cross-check monitoring - Max time allowed for N-axis' Wheel angle on demand request difference	U8	x10msec	Max time allowed for N-Axis' Wheel angle on demand request difference	10	255	10
P3384 - P3418	UNUSED						0
P3419	INTER_MONITOR_SEC_CRC	U16	dec	This EE location is reserved to store CRC Application calculates sector CRC if new .eep file is downloded. Application verifies the sector CRC value at every boot-up, to check the EEPROM sector data is valid or not. This value shall NOT be modified by user at all.	0	65535	51030

Production/Calibration Flag

Addr	Name	Type	Unit	Description	MIN	MAX	Default
P3771	Calibration counter - Spool calibration	U8	dec	Spool dead-band Calibration counter	0	255	0
P3772	Bit inverted value for "Calibration counter - Spool calibration"	U8	dec	Bit inverted value for Spool dead-band Calibration counter	0	255	255
P3773	Calibration counter - Analogue WAS	U8	dec	Analogue WAS calibration counter	0	255	0
P3774	Bit inverted value for "Calibration counter - Analogue WAS"	U8	dec	Bit inverted value Analogue WAS calibration counter	0	255	255
P3775	Calibration counter - CAN WAS	U8	dec	CAN based WAS calibration counter	0	255	0
P3776	Bit inverted value for "Calibration counter - CAN WAS"	U8	dec	Bit inverted value for CAN based WAS calibration counter	0	255	255
P3777-P3788	UNUSED						0
P3789	PRODUCTION_CALIB_FLAG_SEC_CRC	U16	dec	This EE location is reserved to store CRC Application calculates sector CRC if new .eep file is downloded. Application verifies the sector CRC value at every boot-up, to check the EEPROM sector data is valid or not. This value shall NOT be modified by user at all.	0	65535	0

Auto Calibration Config

Addr	Name	Type	Unit	Description	MIN	MAX	Default
P3791	Analogue sensor calibration - Max allowable analogue sensor	U16	mVolts	Maximum allowed signal to be captured for neutral position during Analogue sensor auto-calibration	0	5000	4500

Addr	Name	Type	Unit	Description	MIN	MAX	Default
	signal to be captured in neutral						
P3793	Analogue sensor calibration - Min voltage needed in between the captured analogue sensor values	U16	mVolts	Determines the minimum voltage needed in between the captured Analogue sensor voltage (minimum, neutral and maximum), to ensure a sufficient high analogue signal resolution during Analogue sensor auto-calibration.	0	2500	0
P3795	Analogue sensor calibration - Min allowable analogue sensor signal to be captured in neutral	U16	mVolts	Minimum allowed signal to be captured for neutral position during analogue sensor auto-calibration.	0	5000	500
P3797	Spool calibration - Max closed loop dead-band edge	U16	x10u Meter	Maximum closed loop dead-band value (for both left- and right-side), hence the found dead-band values needs to be in between P3799 and P3797.	0	300	300
P3799	Spool calibration - Min closed loop dead-band edge	U16	x10u Meter	Minimum closed loop dead-band value (for both left- and right-side), hence the found dead-band values needs to be in between P3799 and P3797.	0	300	0
P3801	Spool calibration - Activation timeout	U8	dec	The time window the user has to start the spool auto-calibration (i.e. to press the "Start Calibration" button) after the steering wheel has been activated and the motion has stopped again	1	60	20
P3802	Spool calibration - Initial spool position	U16	x10u Meter	The initial spool position value, the spool auto-calibration function will start at. The higher set point, the faster the wheels movement will be. Recommend: 115 for OSPE/EHi; 200 for EHPS	50	300	125
P3804	Spool calibration - +/- turn range sweep	U16	dDeg	This is the +/- turn range sweep where the auto-calibration function will measure the time for when moving the spool from left to right and right to left	5	400	25
P3806	Spool calibration - Max time for acceptable CL dead-band edge	U16	x100mse c	P3806 and P3808 indicate the target sweep time for the spool calibration function, to find an acceptable closed loop dead-band edge. That maximum given time is defined by P3806	10	600	110
P3808	Spool calibration - Min time for acceptable CL dead-band edge	U16	x100mse c	P3806 and P3808 indicate the target sweep time for the spool calibration function, to find an acceptable closed loop dead-band edge. The minimum given time is defined by P3808	10	600	60
P3810	Spool calibration - Vector sample size	U8	dec	In most cases, to find an acceptable closed loop dead-band edge within a given time frame requires more attempts (to ensure consistency in the captured/found values). P3810 defines the vector size for how many attempts (for left- and right-side dead-band edge, respectively) should be considered	1	10	7
P3811	Spool calibration - Min valid samples	U8	dec	P3811 defines how many of these attempts (defined by P3810) that needs to be equal to get an successful spool calibration.	1	10	5

Addr	Name	Type	Unit	Description	MIN	MAX	Default
P3812	Spool calibration - +/- turn range sweep add-on	U16	dDeg	This indicates the additional +/- turn range which will be added to the value in P3804. The additional turn range movement is required to obtain a stable spool position and also stable wheel movement of the vehicle. The wheels will move in between this +/- turn range, but time will only be measured in between the +/- turn range specified by P3804	5	400	25
P3814	Spool calibration - Spool set-point increase/decrease step	U8	%	When the auto-calibration function has determined if the last attempt was too slow or to fast (hence, within the time frame specified by P3806 and P3808), it will: • Too slow: add the value specified by P3814 to initial set-point value. • Too fast: subtract the value specified by P3814 to initial set-point value	1	25	10
P3815	WAS calibration - Mapped cyl. str. vol. (steering left) at 33% VB	U16	ccm	Mapped cylinder stroke volume (steering left) at 33% voltage base	100	10000	333
P3817	WAS calibration - Mapped cyl. str. vol. (steering left) at 67% VB	U16	ccm	Mapped cylinder stroke volume (steering left) at 67% voltage base	100	10000	667
P3819	WAS calibration - Mapped cyl. str. vol. (steering left) at 100% VB	U16	ccm	Mapped cylinder stroke volume (steering left) at 100% voltage base	100	10000	1000
P3821	WAS calibration - Mapped VB for cyl. str. vol. (steering left)	U16	mVolts	Mapped voltage base for cylinder stroke volume (steering left)	0	6000	2000
P3823	WAS calibration - Mapped cyl. str. vol. (steering right) at 33% VB	U16	ccm	Mapped cylinder stroke volume (steering right) at 33% voltage base	100	10000	333
P3825	WAS calibration - Mapped cyl. str. vol. (steering right) at 67% VB	U16	ccm	Mapped cylinder stroke volume (steering right) at 67% voltage base	100	10000	667
P3827	WAS calibration - Mapped cyl. str. vol. (steering right) at 100% VB	U16	ccm	Mapped cylinder stroke volume (steering right) at 100% voltage base	100	10000	1000
P3829	WAS calibration - Mapped VB for cyl. str. vol. (steering right)	U16	mVolts	Mapped voltage base for cylinder stroke volume (steering right)	0	6000	2000
P3831	WAS calibration - Mapped max WA (steering left) at 33% VB	U8	deg	Mapped maximum wheel angle (steering left) at 33% voltage base	0	89	30
P3832	WAS calibration - Mapped max WA (steering left) at 67% VB	U8	deg	Mapped maximum wheel angle (steering left) at 67% voltage base	0	89	60
P3833	WAS calibration - Mapped max WA (steering left) at 100% VB	U8	deg	Mapped maximum wheel angle (steering left) at 100% voltage base	0	89	89
P3834	WAS calibration - Mapped VB for max WA (steering left)	U16	mVolts	Mapped voltage base for maximum wheel angle (steering left)	0	6000	2000
P3836	WAS calibration - Mapped max WA (steering right) at 33% VB	U8	deg	Mapped maximum wheel angle (steering right) at 33% voltage base	0	89	30

Addr	Name	Type	Unit	Description	MIN	MAX	Default
P3837	WAS calibration - Mapped max WA (steering right) at 67% VB	U8	deg	Mapped maximum wheel angle (steering right) at 67% voltage base	0	89	60
P3838	WAS calibration - Mapped max WA (steering right) at 100% VB	U8	deg	Mapped maximum wheel angle (steering right) at 100% voltage base	0	89	89
P3839	WAS calibration - Mapped VB for max WA (steering right)	U16	mVolts	Mapped voltage base for maximum wheel angle (steering right)	0	6000	2000
P3841	WAS calibration - Max allowable CAN WAS signal to be captured in neutral	U16	mVolts	Maximum allowed signal to be captured for neutral position during CAN WAS auto-calibration	0	5000	4500
P3843	WAS calibration - Min voltage needed in between the captured CAN WAS values	U16	mVolts	Determines the minimum voltage needed in between the captured CAN WAS voltage (minimum, neutral and maximum), to ensure a sufficient high wheel angle resolution during CAN WAS auto-calibration.	0	2500	0
P3845	WAS calibration - Min allowable CAN WAS signal to be captured in neutral	U16	mVolts	Minimum allowed signal to be captured for neutral position during CAN WAS auto-calibration	0	5000	500
P3847	WAS calibration - Minimum spool setpoint for N-Axis	U16	x10u Meter	This is the minimum spool set point that will be used during WAS calibration to the Spool Setpoint vs Master WAS Speed curve, when the Master WAS Speed is beyond the noise gate value.	90	1000	150
P3849	WAS Calibration - Max allowed Master WAS speed for N-Axis	U8	Deg/s	Max allowed master WAS speed used during WAS calibration to the Spool Setpoint vs Master WAS Speed curve. This value should be greater than NAXIS_MASTER_WAS_SPEED_NOISE_GATE_DEGPS. More the value, lesser will be the agression in the movement in wheels	1	40	5
P3850	Spool Calibration- Spool set point at which the Spool Calibration will disengage for N-Axis	U16	x10u Meter	This is the value of the Spool set point at which the Spool Calibration will disengage	90	1000	200
P3852-P3861	UNUSED						0
P3862	AUTO_CALIB_CONFIG_SEC_CRC	U16	dec	This EE location is reserved to store CRC Application calculates sector CRC if new .eep file is downloded. Application verifies the sector CRC value at every boot-up, to check the EEPROM sector data is valid or not. This value shall NOT be modified by user at all.	0	65535	63563

N-Axis

Addr	Name	Type	Unit	Description	MIN	MAX	Default
P3864	N-Axis - Virtual axis position clamp at vehicle speed 0	U16	mm	Virtual Axis Position clamp at vehicle speed 0	0	10000	4000
P3866	N-Axis - Virtual axis position clamp at vehicle speed 1	U16	mm	Virtual Axis Position clamp at vehicle speed 1	0	10000	2000
P3868	N-Axis - Virtual axis position clamp at vehicle speed 2	U16	mm	Virtual Axis Position clamp at vehicle speed 2	0	10000	1000
P3870	N-Axis - Vehicle speed 1 for virtual axis position clamp	U8	kmph	Vehicle speed 1 for Virtual Axis Position clamp	0	100	15

Addr	Name	Type	Unit	Description	MIN	MAX	Default
P3871	N-Axis - Vehicle speed 2 for virtual axis position clamp	U8	kmph	Vehicle speed 2 for Virtual Axis Position clamp	0	100	25
P3872	N-Axis - Virtual axis position ramp at vehicle speed 0	U16	mm	Virtual Axis Position ramp at vehicle speed 0. Virtual Axis Position will be ramped at mm/s	0	10000	500
P3874	N-Axis - Virtual axis position ramp at vehicle speed 1	U16	mm	Virtual Axis Position ramp at vehicle speed 1. Virtual Axis Position will be ramped at mm/s	0	10000	300
P3876	N-Axis - Virtual axis position ramp at vehicle speed 2	U16	mm	Virtual Axis Position ramp at vehicle speed 2. Virtual Axis Position will be ramped at mm/s	0	10000	100
P3878	N-Axis - Vehicle speed 1 for virtual axis position ramp	U8	kmph	Vehicle speed 1 for Virtual Axis Position ramp	0	100	15
P3879	N-Axis - Vehicle speed 2 for virtual axis position ramp	U8	kmph	Vehicle speed 2 for Virtual Axis Position ramp	0	100	25
P3880	N-Axis - Virtual axis angle clamp at vehicle speed 0	U16	dDeg	Virtual Axis Angle clamp at vehicle speed 0	0	890	890
P3882	N-Axis - Virtual axis angle clamp at vehicle speed 1	U16	dDeg	Virtual Axis Angle clamp at vehicle speed 1	0	890	450
P3884	N-Axis - Virtual axis angle clamp at vehicle speed 2	U16	dDeg	Virtual Axis Angle clamp at vehicle speed 2	0	890	200
P3886	N-Axis - Vehicle speed 1 for virtual axis angle clamp	U8	kmph	Vehicle speed 1 for Virtual Axis Angle clamp	0	100	15
P3887	N-Axis - Vehicle speed 2 for virtual axis angle clamp	U8	kmph	Vehicle speed 2 for Virtual Axis Angle clamp	0	100	25
P3888	N-Axis - Virtual axis angle ramp at vehicle speed 0	U16	cDeg	Virtual Axis Angle ramp at vehicle speed 0. Virtual Axis Angle will be ramped at 1 Deg/s i.e. 1 cDeg/10ms	0	18000	60
P3890	N-Axis - Virtual axis angle ramp at vehicle speed 1	U16	cDeg	Virtual Axis Angle ramp at vehicle speed 1. Virtual Axis Angle will be ramped at 1 Deg/s i.e. 1 cDeg/10ms	0	18000	40
P3892	N-Axis - Virtual axis angle ramp at vehicle speed 2	U16	cDeg	Virtual Axis Angle ramp at vehicle speed 2. Virtual Axis Angle will be ramped at 1 Deg/s i.e. 1 cDeg/10ms	0	18000	10
P3894	N-Axis - Vehicle speed 1 for virtual axis angle ramp	U8	kmph	Vehicle speed 1 for Virtual Axis Angle ramp	0	100	15
P3895	N-Axis - Vehicle speed 2 for virtual axis angle ramp	U8	kmph	Vehicle speed 2 for Virtual Axis Angle ramp	0	100	25
P3896	Slave position with respect to the master	SIGNED16	mm	Slave position with respect to the master	-10000	-100	-2000
P3898	Virtual axis mean position with respect to the master	SIGNED16	mm	Virtual axis mean position with respect to the master. This is the center point around which the Virtual Axis Position can move	-10000	-100	-2000
P3900	N-Axis - Closed loop gain at vehicle speed 0	U8	%	Closed loop gain at vehicle speed 0	0	200	50
P3901	N-Axis - Closed loop gain at vehicle speed 1	U8	%	Closed loop gain at vehicle speed 1	0	200	50

Addr	Name	Type	Unit	Description	MIN	MAX	Default
P3902	N-Axis - Closed loop gain at vehicle speed 2	U8	%	Closed loop gain at vehicle speed 2	0	200	50
P3903	N-Axis - Vehicle speed 1 for closed loop gain 1	U8	%	Vehicle speed 1 for closed loop gain 1	0	100	15
P3904	N-Axis - Vehicle speed 2 for closed loop gain 2	U8	%	Vehicle speed 2 for closed loop gain 2	0	100	25
P3905	Time parameter of moving average filter for calculation of average master WAS speed	U8	x10mSec	Average Master WAS speed. This value will also be used to sample the Master WAS Speed.	1	25	1
P3906	Master WAS Speed Noise Gate	U8	Deg/s	Noise gate for Master WAS speed below which Master WAS Speed will be considered 0	0	10	2
P3907	VSP Trigger Hysteresis	U8	kmph	Hysterysis trigger value of vehicle speed used in the conditions to shift the states between on-road and operational	0	10	2
P3908	VSP Trigger Mean	U8	kmph	Mean trigger value of vehicle speed used in the coditions to shift the states between on-road and operational or between Pre-safe state and Safe state.	1	100	25
P3909	On-Road to On-Road-Locked Max WA	U8	dDeg	When the absolute value of the wheel angle is equal to or is less than this value, the operational state shifts from on-road to on-road locked	0	255	5
P3910	Preoperational to Operational WA Threshold	U8	dDeg	When the error between the wheel angle and the wheel angle setpoint is below this value, the operational state shifts from pre-op to operational	1	255	5
P3911	Node WAS Speed Noise Gate	U8	Deg/s	This is noise gate below which the node's WAS speed, derived from the error between wheel's set point and wheel anlgle position, will be considered 0	0	25	2
P3912	N-Axis - Slave set point angle clamp at vehicle speed 0	U16	dDeg	Slave set point angle clamp at vehicle speed 0	0	890	300
P3914	N-Axis - Slave set point angle clamp at vehicle speed 1	U16	dDeg	Slave set point angle clamp at vehicle speed 1	0	890	200
P3916	N-Axis - Slave set point angle clamp at vehicle speed 2	U16	dDeg	Slave set point angle clamp at vehicle speed 2	0	890	150
P3918	N-Axis - Vehicle speed 1 for slave set point 1	U8	kmph	Vehicle speed 1 for slave set point 1	0	100	15
P3919	N-Axis - Vehicle speed 2 for slave set point 2	U8	kmph	Vehicle speed 2 for slave set point 2	0	100	25
P3920	Demanded left wheel angle limit on indication from MMI	U8	deg	Demanded left wheel angle limit on indication from MMI	0	89	20

Addr	Name	Type	Unit	Description	MIN	MAX	Default
P3921	Demanded right wheel angle limit on indication from MMI	U8	deg	Demanded right wheel angle limit on indication from MMI	0	89	20
P3922	N-Axis - Max Wheel Angle Soft Stop offset	U8	dDeg	This parameter defines a virtual soft end stop offset relative to the max wheel angle defined in the vehicle geometry	0	100	25
P3923	N-Axis - Dynamic SVC integral limit	U8	Deg	Dynamic SVC integral limit to use while EH-Spool is close to neutral	0	255	0
P3924	Maximum steer angle, left	U8	Deg	Maximum steer angle to left side Note: Writing values >89 will force to use automatic adjusted maximum steer angle, Left-value on WAS calibration	0	255	35
P3925	Maximum steer angle, right	U8	Deg	Maximum steer angle to right side Note: Writing values >89 will force to use automatic adjusted maximum steer angle, Right-value on WAS calibration	0	255	35
P3926	Vehicle speed limit for Wheel angle limit on demand activation	U8	Kmph	Wheel angle limit on demand activation based on Vehicle speed	1	10	3
P3927-P4061	UNUSED						0
P4062	N_AXIS_SEC_CRC	U16	dec	This EE location is reserved to store CRC Application calculates sector CRC if new .eep file is downloded. Application verifies the sector CRC value at every boot-up, to check the EEPROM sector data is valid or not. This value shall NOT be modified by user at all.	0	65535	26831

PLM metadata

Addr	Name	Type	Unit	Description	MIN	MAX	Default
P4064	SALES_ORDER_NUMBER1	U8	Hex	31			31
P4065	SALES_ORDER_NUMBER2	U8	Hex	32			32
P4066	SALES_ORDER_NUMBER3	U8	Hex	33			33
P4067	SALES_ORDER_NUMBER4	U8	Hex	34			34
P4068	SALES_ORDER_NUMBER5	U8	Hex	35			35
P4069	SALES_ORDER_NUMBER6	U8	Hex	36			36
P4070	SALES_ORDER_NUMBER7	U8	Hex	37			37
P4071	SALES_ORDER_NUMBER8	U8	Hex	38			38
P4072	SALES_ORDER_NUMBER9	U8	Hex	2C			2C
P4073	SALES_ORDER_NUMBER10	U8	Hex	31			31
P4074	SALES_ORDER_NUMBER11	U8	Hex	32			32

Addr	Name	Type	Unit	Description	MIN	MAX	Default
P4075	SALES_ORDER_NUMBER12	U8	Hex	2C			2C
P4076	SALES_ORDER_NUMBER13	U8	Hex	33			33
P4077	SALES_ORDER_NUMBER14	U8	Hex	34			34
P4078	MAIN_CTRL_APP_SW_NUMBER1	U8	Hex	45			45
P4079	MAIN_CTRL_APP_SW_NUMBER2	U8	Hex	44			44
P4080	MAIN_CTRL_APP_SW_NUMBER3	U8	Hex	31			31
P4081	MAIN_CTRL_APP_SW_NUMBER4	U8	Hex	32			32
P4082	MAIN_CTRL_APP_SW_NUMBER5	U8	Hex	33			33
P4083	MAIN_CTRL_APP_SW_NUMBER6	U8	Hex	34			34
P4084	MAIN_CTRL_APP_SW_NUMBER7	U8	Hex	35			35
P4085	MAIN_CTRL_APP_SW_NUMBER8	U8	Hex	36			36
P4086	MAIN_CTRL_APP_SW_NUMBER9	U8	Hex	2C			2C
P4087	MAIN_CTRL_APP_SW_NUMBER10	U8	Hex	37			37
P4088	MAIN_CTRL_APP_SW_NUMBER11	U8	Hex	38			38
P4089	MAIN_CTRL_APP_SW_NUMBER12	U8	Hex	2C			2C
P4090	MAIN_CTRL_APP_SW_NUMBER13	U8	Hex	39			39
P4091	MAIN_CTRL_APP_SW_NUMBER14	U8	Hex	30			30
P4092	SAFETY_CTRL_APP_SW_NUMBER1	U8	Hex	45			45
P4093	SAFETY_CTRL_APP_SW_NUMBER2	U8	Hex	44			44
P4094	SAFETY_CTRL_APP_SW_NUMBER3	U8	Hex	31			31
P4095	SAFETY_CTRL_APP_SW_NUMBER4	U8	Hex	32			32
P4096	SAFETY_CTRL_APP_SW_NUMBER5	U8	Hex	33			33
P4097	SAFETY_CTRL_APP_SW_NUMBER6	U8	Hex	34			34
P4098	SAFETY_CTRL_APP_SW_NUMBER7	U8	Hex	35			35
P4099	SAFETY_CTRL_APP_SW_NUMBER8	U8	Hex	36			36
P4100	SAFETY_CTRL_APP_SW_NUMBER9	U8	Hex	2C			2C
P4101	SAFETY_CTRL_APP_SW_NUMBER10	U8	Hex	37			37
P4102	SAFETY_CTRL_APP_SW_NUMBER11	U8	Hex	38			38
P4103	SAFETY_CTRL_APP_SW_NUMBER12	U8	Hex	2C			2C
P4104	SAFETY_CTRL_APP_SW_NUMBER13	U8	Hex	39			39
P4105	SAFETY_CTRL_APP_SW_NUMBER14	U8	Hex	30			30
P4106	BOOT_LOADER_SW_NUMBER1	U8	Hex	45			45
P4107	BOOT_LOADER_SW_NUMBER2	U8	Hex	44			44
P4108	BOOT_LOADER_SW_NUMBER3	U8	Hex	31			31
P4109	BOOT_LOADER_SW_NUMBER4	U8	Hex	32			32
P4110	BOOT_LOADER_SW_NUMBER5	U8	Hex	33			33
P4111	BOOT_LOADER_SW_NUMBER6	U8	Hex	34			34
P4112	BOOT_LOADER_SW_NUMBER7	U8	Hex	35			35
P4113	BOOT_LOADER_SW_NUMBER8	U8	Hex	36			36
P4114	BOOT_LOADER_SW_NUMBER9	U8	Hex	2C			2C
P4115	BOOT_LOADER_SW_NUMBER10	U8	Hex	37			37
P4116	BOOT_LOADER_SW_NUMBER11	U8	Hex	38			38
P4117	BOOT_LOADER_SW_NUMBER12	U8	Hex	2C			2C
P4118	BOOT_LOADER_SW_NUMBER13	U8	Hex	39			39
P4119	BOOT_LOADER_SW_NUMBER14	U8	Hex	30			30
P4120	MAIN_CTRL_DEFAULT_PARAMETERS1	U8	Hex	45			45
P4121	MAIN_CTRL_DEFAULT_PARAMETERS2	U8	Hex	44			44
P4122	MAIN_CTRL_DEFAULT_PARAMETERS3	U8	Hex	31			31
P4123	MAIN_CTRL_DEFAULT_PARAMETERS4	U8	Hex	32			32

© Danfoss | Nov 2019 | 91

Addr	Name	Type	Unit	Description	MIN	MAX	Default
P4124	MAIN_CTRL_DEFAULT_PARAMETERS5	U8	Hex	33			33
P4125	MAIN_CTRL_DEFAULT_PARAMETERS6	U8	Hex	34			34
P4126	MAIN_CTRL_DEFAULT_PARAMETERS7	U8	Hex	35			35
P4127	MAIN_CTRL_DEFAULT_PARAMETERS8	U8	Hex	36			36
P4128	MAIN_CTRL_DEFAULT_PARAMETERS9	U8	Hex	2C			2C
P4129	MAIN_CTRL_DEFAULT_PARAMETERS10	U8	Hex	37			37
P4130	MAIN_CTRL_DEFAULT_PARAMETERS11	U8	Hex	38			38
P4131	MAIN_CTRL_DEFAULT_PARAMETERS12	U8	Hex	2C			2C
P4132	MAIN_CTRL_DEFAULT_PARAMETERS13	U8	Hex	39			39
P4133	MAIN_CTRL_DEFAULT_PARAMETERS14	U8	Hex	30			30
P4134	SAFETY_CTRL_DEFAULT_PARAMETERS1	U8	Hex	45			45
P4135	SAFETY_CTRL_DEFAULT_PARAMETERS2	U8	Hex	44			44
P4136	SAFETY_CTRL_DEFAULT_PARAMETERS3	U8	Hex	31			31
P4137	SAFETY_CTRL_DEFAULT_PARAMETERS4	U8	Hex	32			32
P4138	SAFETY_CTRL_DEFAULT_PARAMETERS5	U8	Hex	33			33
P4139	SAFETY_CTRL_DEFAULT_PARAMETERS6	U8	Hex	34			34
P4140	SAFETY_CTRL_DEFAULT_PARAMETERS7	U8	Hex	35			35
P4141	SAFETY_CTRL_DEFAULT_PARAMETERS8	U8	Hex	36			36
P4142	SAFETY_CTRL_DEFAULT_PARAMETERS9	U8	Hex	2C			2C
P4143	SAFETY_CTRL_DEFAULT_PARAMETERS10	U8	Hex	37			37
P4144	SAFETY_CTRL_DEFAULT_PARAMETERS11	U8	Hex	38			38
P4145	SAFETY_CTRL_DEFAULT_PARAMETERS12	U8	Hex	2C			2C
P4146	SAFETY_CTRL_DEFAULT_PARAMETERS13	U8	Hex	39			39
P4147	SAFETY_CTRL_DEFAULT_PARAMETERS14	U8	Hex	30			30
P4148	OEM_PARAMETERS1	U8	Hex	45			45
P4149	OEM_PARAMETERS2	U8	Hex	44			44
P4150	OEM_PARAMETERS3	U8	Hex	31			31
P4151	OEM_PARAMETERS4	U8	Hex	32			32
P4152	OEM_PARAMETERS5	U8	Hex	33			33
P4153	OEM_PARAMETERS6	U8	Hex	34			34
P4154	OEM_PARAMETERS7	U8	Hex	35			35
P4155	OEM_PARAMETERS8	U8	Hex	36			36
P4156	OEM_PARAMETERS9	U8	Hex	2C			2C
P4157	OEM_PARAMETERS10	U8	Hex	37			37
P4158	OEM_PARAMETERS11	U8	Hex	38			38
P4159	OEM_PARAMETERS12	U8	Hex	2C			2C
P4160	OEM_PARAMETERS13	U8	Hex	39			39
P4161	OEM_PARAMETERS14	U8	Hex	30			30
P4162	HW_MODULEBARCODE1	U8	Hex	45			45
P4163	HW_MODULEBARCODE2	U8	Hex	44			44
P4164	HW_MODULEBARCODE3	U8	Hex	31			31
P4165	HW_MODULEBARCODE4	U8	Hex	32			32
P4166	HW_MODULEBARCODE5	U8	Hex	33			33
P4167	HW_MODULEBARCODE6	U8	Hex	34			34
P4168	HW_MODULEBARCODE7	U8	Hex	35			35
P4169	HW_MODULEBARCODE8	U8	Hex	36			36
P4170	HW_MODULEBARCODE9	U8	Hex	2C			2C
P4171	HW_MODULEBARCODE10	U8	Hex	37			37
P4172	HW_MODULEBARCODE11	U8	Hex	38			38

Addr	Name	Type	Unit	Description	MIN	MAX	Default
P4173	HW_MODULEBARCODE12	U8	Hex	2C			2C
P4174	HW_MODULEBARCODE13	U8	Hex	39			39
P4175	HW_MODULEBARCODE14	U8	Hex	30			30
P4176	HW_MODULEBARCODE15	U8	Hex	3F			3F
P4177	HW_MODULEBARCODE16	U8	Hex	3F			3F
P4178	HW_MODULEBARCODE17	U8	Hex	3F			3F
P4179	HW_MODULEBARCODE18	U8	Hex	3F			3F
P4180	HW_MODULEBARCODE19	U8	Hex	3F			3F
P4181	HW_MODULEBARCODE20	U8	Hex	3F			3F
P4182	HW_MODULEBARCODE21	U8	Hex	3F			3F
P4183	HW_MODULEBARCODE22	U8	Hex	3F			3F
P4184	HW_MODULEBARCODE23	U8	Hex	3F			3F
P4185	HW_MODULEBARCODE24	U8	Hex	3F			3F
P4186	HW_MODULEBARCODE25	U8	Hex	3F			3F
P4187	HW_MODULEBARCODE26	U8	Hex	3F			3F
P4188	HW_MODULEBARCODE27	U8	Hex	3F			3F
P4189	HW_MODULEBARCODE28	U8	Hex	3F			3F
P4190-P4207	UNUSED						0
P4208	PLM_DATA_SEC_CRC	U16	dec	This EE location is reserved to store CRC Application calculates sector CRC if new .eep file is downloded. Application verifies the sector CRC value at every boot-up, to check the EEPROM sector data is valid or not. This value shall NOT be modified by user at all.	0	65535	0000

Important Parameters with gray background ( ) are internal and shall not to be changed!

OEM Data

Addr	Name	Type	Unit	Description	MIN	MAX	Default
P4210	COMPONENT_ID_FLAGS	U8	Hex	Control J1939 component ID content Bit 1: Enable appending of sales order number Bit 2: Enable appending of OEM memory sector parameters (specified by P4211 NoOfBytes) Bit 3-8: Reserved	0	255	0
P4211	NO_OF_BYTES	U8	Hex	This parameter defines how many bytes shall be appended to the J1939 component ID message (ASCII format)	0	100	0
P4212	OEM_MEMORY_SECTOR_BYTE_1	U8	Hex	OEM memory sector (Formatted in ASCII)	0	255	0
P4213	OEM_MEMORY_SECTOR_BYTE_2	U8	Hex	OEM memory sector (Formatted in ASCII)	0	255	0
P4214	OEM_MEMORY_SECTOR_BYTE_3	U8	Hex	OEM memory sector (Formatted in ASCII)	0	255	0
P4215	OEM_MEMORY_SECTOR_BYTE_4	U8	Hex	OEM memory sector (Formatted in ASCII)	0	255	0
P4216	OEM_MEMORY_SECTOR_BYTE_5	U8	Hex	OEM memory sector (Formatted in ASCII)	0	255	0
P4217	OEM_MEMORY_SECTOR_BYTE_6	U8	Hex	OEM memory sector (Formatted in ASCII)	0	255	0
P4218	OEM_MEMORY_SECTOR_BYTE_7	U8	Hex	OEM memory sector (Formatted in ASCII)	0	255	0
P4219	OEM_MEMORY_SECTOR_BYTE_8	U8	Hex	OEM memory sector (Formatted in ASCII)	0	255	0
P4220	OEM_MEMORY_SECTOR_BYTE_9	U8	Hex	OEM memory sector (Formatted in ASCII)	0	255	0
P4221	OEM_MEMORY_SECTOR_BYTE_10	U8	Hex	OEM memory sector (Formatted in ASCII)	0	255	0

Addr	Name	Type	Unit	Description	MIN	MAX	Default
P4222	OEM_MEMORY_SECTOR_BYTE_11	U8	Hex	OEM memory sector (Formatted in ASCII)	0	255	0
P4223	OEM_MEMORY_SECTOR_BYTE_12	U8	Hex	OEM memory sector (Formatted in ASCII)	0	255	0
P4224	OEM_MEMORY_SECTOR_BYTE_13	U8	Hex	OEM memory sector (Formatted in ASCII)	0	255	0
P4225	OEM_MEMORY_SECTOR_BYTE_14	U8	Hex	OEM memory sector (Formatted in ASCII)	0	255	0
P4226	OEM_MEMORY_SECTOR_BYTE_15	U8	Hex	OEM memory sector (Formatted in ASCII)	0	255	0
P4227	OEM_MEMORY_SECTOR_BYTE_16	U8	Hex	OEM memory sector (Formatted in ASCII)	0	255	0
P4228	OEM_MEMORY_SECTOR_BYTE_17	U8	Hex	OEM memory sector (Formatted in ASCII)	0	255	0
P4229	OEM_MEMORY_SECTOR_BYTE_18	U8	Hex	OEM memory sector (Formatted in ASCII)	0	255	0
P4230	OEM_MEMORY_SECTOR_BYTE_19	U8	Hex	OEM memory sector (Formatted in ASCII)	0	255	0
P4231	OEM_MEMORY_SECTOR_BYTE_20	U8	Hex	OEM memory sector (Formatted in ASCII)	0	255	0
P4232	OEM_MEMORY_SECTOR_BYTE_21	U8	Hex	OEM memory sector (Formatted in ASCII)	0	255	0
P4233	OEM_MEMORY_SECTOR_BYTE_22	U8	Hex	OEM memory sector (Formatted in ASCII)	0	255	0
P4234	OEM_MEMORY_SECTOR_BYTE_23	U8	Hex	OEM memory sector (Formatted in ASCII)	0	255	0
P4235	OEM_MEMORY_SECTOR_BYTE_24	U8	Hex	OEM memory sector (Formatted in ASCII)	0	255	0
P4236	OEM_MEMORY_SECTOR_BYTE_25	U8	Hex	OEM memory sector (Formatted in ASCII)	0	255	0
P4237	OEM_MEMORY_SECTOR_BYTE_26	U8	Hex	OEM memory sector (Formatted in ASCII)	0	255	0
P4238	OEM_MEMORY_SECTOR_BYTE_27	U8	Hex	OEM memory sector (Formatted in ASCII)	0	255	0
P4239	OEM_MEMORY_SECTOR_BYTE_28	U8	Hex	OEM memory sector (Formatted in ASCII)	0	255	0
P4240	OEM_MEMORY_SECTOR_BYTE_29	U8	Hex	OEM memory sector (Formatted in ASCII)	0	255	0
P4241	OEM_MEMORY_SECTOR_BYTE_30	U8	Hex	OEM memory sector (Formatted in ASCII)	0	255	0
P4242	OEM_MEMORY_SECTOR_BYTE_31	U8	Hex	OEM memory sector (Formatted in ASCII)	0	255	0
P4243	OEM_MEMORY_SECTOR_BYTE_32	U8	Hex	OEM memory sector (Formatted in ASCII)	0	255	0
P4244	OEM_MEMORY_SECTOR_BYTE_33	U8	Hex	OEM memory sector (Formatted in ASCII)	0	255	0
P4245	OEM_MEMORY_SECTOR_BYTE_34	U8	Hex	OEM memory sector (Formatted in ASCII)	0	255	0
P4246	OEM_MEMORY_SECTOR_BYTE_35	U8	Hex	OEM memory sector (Formatted in ASCII)	0	255	0
P4247	OEM_MEMORY_SECTOR_BYTE_36	U8	Hex	OEM memory sector (Formatted in ASCII)	0	255	0
P4248	OEM_MEMORY_SECTOR_BYTE_37	U8	Hex	OEM memory sector (Formatted in ASCII)	0	255	0
P4249	OEM_MEMORY_SECTOR_BYTE_38	U8	Hex	OEM memory sector (Formatted in ASCII)	0	255	0
P4250	OEM_MEMORY_SECTOR_BYTE_39	U8	Hex	OEM memory sector (Formatted in ASCII)	0	255	0
P4251	OEM_MEMORY_SECTOR_BYTE_40	U8	Hex	OEM memory sector (Formatted in ASCII)	0	255	0
P4252	OEM_MEMORY_SECTOR_BYTE_41	U8	Hex	OEM memory sector (Formatted in ASCII)	0	255	0
P4253	OEM_MEMORY_SECTOR_BYTE_42	U8	Hex	OEM memory sector (Formatted in ASCII)	0	255	0
P4254	OEM_MEMORY_SECTOR_BYTE_43	U8	Hex	OEM memory sector (Formatted in ASCII)	0	255	0
P4255	OEM_MEMORY_SECTOR_BYTE_44	U8	Hex	OEM memory sector (Formatted in ASCII)	0	255	0
P4256	OEM_MEMORY_SECTOR_BYTE_45	U8	Hex	OEM memory sector (Formatted in ASCII)	0	255	0
P4257	OEM_MEMORY_SECTOR_BYTE_46	U8	Hex	OEM memory sector (Formatted in ASCII)	0	255	0
P4258	OEM_MEMORY_SECTOR_BYTE_47	U8	Hex	OEM memory sector (Formatted in ASCII)	0	255	0
P4259	OEM_MEMORY_SECTOR_BYTE_48	U8	Hex	OEM memory sector (Formatted in ASCII)	0	255	0
P4260	OEM_MEMORY_SECTOR_BYTE_49	U8	Hex	OEM memory sector (Formatted in ASCII)	0	255	0
P4261	OEM_MEMORY_SECTOR_BYTE_50	U8	Hex	OEM memory sector (Formatted in ASCII)	0	255	0
P4262	OEM_MEMORY_SECTOR_BYTE_51	U8	Hex	OEM memory sector (Formatted in ASCII)	0	255	0
P4263	OEM_MEMORY_SECTOR_BYTE_52	U8	Hex	OEM memory sector (Formatted in ASCII)	0	255	0
P4264	OEM_MEMORY_SECTOR_BYTE_53	U8	Hex	OEM memory sector (Formatted in ASCII)	0	255	0
P4265	OEM_MEMORY_SECTOR_BYTE_54	U8	Hex	OEM memory sector (Formatted in ASCII)	0	255	0
P4266	OEM_MEMORY_SECTOR_BYTE_55	U8	Hex	OEM memory sector (Formatted in ASCII)	0	255	0
P4267	OEM_MEMORY_SECTOR_BYTE_56	U8	Hex	OEM memory sector (Formatted in ASCII)	0	255	0
P4268	OEM_MEMORY_SECTOR_BYTE_57	U8	Hex	OEM memory sector (Formatted in ASCII)	0	255	0
P4269	OEM_MEMORY_SECTOR_BYTE_58	U8	Hex	OEM memory sector (Formatted in ASCII)	0	255	0
P4270	OEM_MEMORY_SECTOR_BYTE_59	U8	Hex	OEM memory sector (Formatted in ASCII)	0	255	0

Addr	Name	Type	Unit	Description	MIN	MAX	Default
P4271	OEM_MEMORY_SECTOR_BYTE_60	U8	Hex	OEM memory sector (Formatted in ASCII)	0	255	0
P4272	OEM_MEMORY_SECTOR_BYTE_61	U8	Hex	OEM memory sector (Formatted in ASCII)	0	255	0
P4273	OEM_MEMORY_SECTOR_BYTE_62	U8	Hex	OEM memory sector (Formatted in ASCII)	0	255	0
P4274	OEM_MEMORY_SECTOR_BYTE_63	U8	Hex	OEM memory sector (Formatted in ASCII)	0	255	0
P4275	OEM_MEMORY_SECTOR_BYTE_64	U8	Hex	OEM memory sector (Formatted in ASCII)	0	255	0
P4276	OEM_MEMORY_SECTOR_BYTE_65	U8	Hex	OEM memory sector (Formatted in ASCII)	0	255	0
P4277	OEM_MEMORY_SECTOR_BYTE_66	U8	Hex	OEM memory sector (Formatted in ASCII)	0	255	0
P4278	OEM_MEMORY_SECTOR_BYTE_67	U8	Hex	OEM memory sector (Formatted in ASCII)	0	255	0
P4279	OEM_MEMORY_SECTOR_BYTE_68	U8	Hex	OEM memory sector (Formatted in ASCII)	0	255	0
P4280	OEM_MEMORY_SECTOR_BYTE_69	U8	Hex	OEM memory sector (Formatted in ASCII)	0	255	0
P4281	OEM_MEMORY_SECTOR_BYTE_70	U8	Hex	OEM memory sector (Formatted in ASCII)	0	255	0
P4282	OEM_MEMORY_SECTOR_BYTE_71	U8	Hex	OEM memory sector (Formatted in ASCII)	0	255	0
P4283	OEM_MEMORY_SECTOR_BYTE_72	U8	Hex	OEM memory sector (Formatted in ASCII)	0	255	0
P4284	OEM_MEMORY_SECTOR_BYTE_73	U8	Hex	OEM memory sector (Formatted in ASCII)	0	255	0
P4285	OEM_MEMORY_SECTOR_BYTE_74	U8	Hex	OEM memory sector (Formatted in ASCII)	0	255	0
P4286	OEM_MEMORY_SECTOR_BYTE_75	U8	Hex	OEM memory sector (Formatted in ASCII)	0	255	0
P4287	OEM_MEMORY_SECTOR_BYTE_76	U8	Hex	OEM memory sector (Formatted in ASCII)	0	255	0
P4288	OEM_MEMORY_SECTOR_BYTE_77	U8	Hex	OEM memory sector (Formatted in ASCII)	0	255	0
P4289	OEM_MEMORY_SECTOR_BYTE_78	U8	Hex	OEM memory sector (Formatted in ASCII)	0	255	0
P4290	OEM_MEMORY_SECTOR_BYTE_79	U8	Hex	OEM memory sector (Formatted in ASCII)	0	255	0
P4291	OEM_MEMORY_SECTOR_BYTE_80	U8	Hex	OEM memory sector (Formatted in ASCII)	0	255	0
P4292	OEM_MEMORY_SECTOR_BYTE_81	U8	Hex	OEM memory sector (Formatted in ASCII)	0	255	0
P4293	OEM_MEMORY_SECTOR_BYTE_82	U8	Hex	OEM memory sector (Formatted in ASCII)	0	255	0
P4294	OEM_MEMORY_SECTOR_BYTE_83	U8	Hex	OEM memory sector (Formatted in ASCII)	0	255	0
P4295	OEM_MEMORY_SECTOR_BYTE_84	U8	Hex	OEM memory sector (Formatted in ASCII)	0	255	0
P4296	OEM_MEMORY_SECTOR_BYTE_85	U8	Hex	OEM memory sector (Formatted in ASCII)	0	255	0
P4297	OEM_MEMORY_SECTOR_BYTE_86	U8	Hex	OEM memory sector (Formatted in ASCII)	0	255	0
P4298	OEM_MEMORY_SECTOR_BYTE_87	U8	Hex	OEM memory sector (Formatted in ASCII)	0	255	0
P4299	OEM_MEMORY_SECTOR_BYTE_88	U8	Hex	OEM memory sector (Formatted in ASCII)	0	255	0
P4300	OEM_MEMORY_SECTOR_BYTE_89	U8	Hex	OEM memory sector (Formatted in ASCII)	0	255	0
P4301	OEM_MEMORY_SECTOR_BYTE_90	U8	Hex	OEM memory sector (Formatted in ASCII)	0	255	0
P4302	OEM_MEMORY_SECTOR_BYTE_91	U8	Hex	OEM memory sector (Formatted in ASCII)	0	255	0
P4303	OEM_MEMORY_SECTOR_BYTE_92	U8	Hex	OEM memory sector (Formatted in ASCII)	0	255	0
P4304	OEM_MEMORY_SECTOR_BYTE_93	U8	Hex	OEM memory sector (Formatted in ASCII)	0	255	0
P4305	OEM_MEMORY_SECTOR_BYTE_94	U8	Hex	OEM memory sector (Formatted in ASCII)	0	255	0
P4306	OEM_MEMORY_SECTOR_BYTE_95	U8	Hex	OEM memory sector (Formatted in ASCII)	0	255	0
P4307	OEM_MEMORY_SECTOR_BYTE_96	U8	Hex	OEM memory sector (Formatted in ASCII)	0	255	0
P4308	OEM_MEMORY_SECTOR_BYTE_97	U8	Hex	OEM memory sector (Formatted in ASCII)	0	255	0
P4309	OEM_MEMORY_SECTOR_BYTE_98	U8	Hex	OEM memory sector (Formatted in ASCII)	0	255	0
P4310	OEM_MEMORY_SECTOR_BYTE_99	U8	Hex	OEM memory sector (Formatted in ASCII)	0	255	0
P4311	OEM_MEMORY_SECTOR_BYTE_100	U8	Hex	OEM memory sector (Formatted in ASCII)	0	255	0

Signature CRC calculation

Diagnostic Trouble Codes

Error codes

The PVED-CLS performs monitoring/diagnostic of the internal electronics, valve operation as well as external interfacing signals. Each monitoring function triggers a transition to the safe state in case a fault is detected.
The controller which detects a given fault first, makes a transition to the safe state and informs the peer controller to also enter safe state. The detecting controller transmits a diagnostic trouble code related to the root-cause on to the CAN bus.
The controller which were requested to enter safe state, issues 'SPN 520208 Demanded safe state'.

J1939-73 DM1, DM2 and DM3 diagnostic protocol is supported.

The list of DTC is divided in 7 sections:

- **I/O signals:** This section lists all failures related to analog and digital inputs & outputs
- **CAN Messages:** This Section lists all failures related to CAN messages
- **Safety Functions:** This Section lists all failures caused by Safety functions and externally triggered safe state DTC's
- **Diagnostic functions:** This section lists all failures detected by diagnostic functions
- **Internal Hardware:** This section lists all failures found on the internal PCB in PVED-CLS
- **Software:** This section lists all failures detected inside the software
- **Monitoring:** This section lists all failures detected by crosscheck input signal and calculation results on SPI between main and Safety UC

Category	SPN	Signal Name	Failure mode	FMI	Severity Level	Possible Root cause(s)
I/O Signals	520192	Analogue sensor connected to AD1	Short circuit to GND	4 - Voltage below normal or short-circuit to low source	Severe	1. Wire connected to AD1 lost connection (open circuit). 2. Wire connected to AD1 short circuit to GND.
			Short circuit to VCC	3 - Voltage above normal or short-circuit to high source	Severe	1. Wire connected to AD1 short circuit to a source higher than 4.9V.
			Too high deviation	25 - Signal crosscheck failed	Severe	1. Wheel angle sensors are not calibrated properly. 2. Sensor characteristics have changed. 3. If two physical separated sensors are used, one of them has lost the mechanical connection or has increased hysteresis 4. WAS crosscheck threshold parameter (P3360) does not match the wheel angle sensor mounting.
			Signal exceeded calibration limit	13 - Out of calibration	Severe	1. Wheel angle sensors are not calibrated properly. 2. Vehicle geometry has changed and it's now possible to steer the wheels further than the calibrated max points. 3. Mechanical link integrity lost
I/O Signals	520193	Analogue Sensor connected to AD2	Short circuit to GND	4 - Voltage below normal or short-circuit to low source	Severe	1. Wire connected to AD2 lost connection (open circuit). 2. Wire connected to AD2 short circuit to GND.
			Short circuit to VCC	3 - Voltage above normal or short-circuit to high source	Severe	1. 1.Wire connected to AD2 short circuit to a source higher than 4.9V.
I/O Signals	520195	Temperature Sensor	too low	1 - Data valid, but below normal operational range - Most severe level	Severe	Ambient Temperature is below -40 °C.
			too high	0 - Data valid, but above normal operational range - Most severe level	Severe	Ambient Temperature + self-heating of PVED-CLS (~15 °C) is above 120 °C.

Category	SPN	Signal Name	Failure mode	FMI	Severity Level	Possible Root cause(s)
			too high average	16 - Data valid, but above normal operating range - Moderately severe level	INFO	Average ambient temperature + self-heating of PVED-CLS (~15 °C) is above 85 °C. This error code can only get active above 500hours of operation and has severity level INFO.
I/O Signals	627	Vbat	too high	3 - Voltage above normal or short-circuit to high source	Severe	Supply voltage is above 35.5V.
			too low	4 - Voltage below normal or short-circuit to low source	INFO	Supply voltage is below 9V. This error code has severity level INFO
			Power on self-test failed due to too low battery supply	1 - Data valid, but below normal operational range - Most severe level	Severe	Supply voltage has been below 9V during Power-On-Self-Test for too long time
I/O Signals	520197	Sensor_+5V	too high	3 - Voltage above normal or short-circuit to high source	Severe	Sensor supply wire above 5.25V
			too low	4 - Voltage below normal or short-circuit to low source	Severe	1. Sensor supply wire below 4.75V 2. Sensor supply wire shortcut to GND 3. Too high load on sensor supply wire
I/O Signals	520198	Cut-Off supply	shortcut to GND	4 - Voltage below normal or short-circuit to low source	Severe	1. DOUT short-circuited to GND
			Shortcut to Vbat	3 - Voltage above normal or short-circuit to high source	Severe	DOUT short-circuited to Vbat
			Dutycycle differs from expected value	8 - Abnormal frequency or pulse width or period	Severe	Internal Failure
			Open circuit	5 - Current below normal or open circuit	Severe	1. No load connected to DOUT 2. Parameterized current levels (P3074 & P3076) do not match the connected load 3. DOUT short-circuited to Vbat
			Too high load	6 - Current above normal or grounded circuit	Severe	1. Load connected to DOUT is too high >2.5A DOUT short-circuited to GND
CAN messages	520200	Vehicle Speed sensor	never received (boot-up timeout)	22 - Message missing	Severe	1. Vehicle speed sensor not powered 2. Vehicle speed sensor CAN Bus not connected 3. Incorrect parameter setting of VSP source address or PGN
			message lost (timeout)	9 - Abnormal update rate	Critical	1. Vehicle speed sensor lost CAN bus or power connection 2. Wrong message timing
			invalid CRC or message sequence	19 - Received network data in error	Critical	1. CAN bus disturbance 2. Incorrect Vehicle speed sensor message implementation
			invalid speed value	2 - Data erratic, intermittent or incorrect	Critical	Vehicle speed sensor data out of range
CAN messages	520201	MMI	never received (boot-up timeout)	22 - Message missing	Severe	1. MMI Not powered 2. MMI CAN Bus not connected 3. Incorrect parameter setting of MMI source address or PGN
			message lost (timeout)	9 - Abnormal update rate	Critical	1. MMI lost CAN bus or power connection 2. Wrong message timing
			invalid CRC or message sequence	19 - Received network data in error	Critical	1. CAN bus disturbance 2. Incorrect MMI message implementation
			invalid VAP/VAA values	2 - Data erratic, intermittent or incorrect	Critical	MMI data out of range
CAN messages	520228	WAS CAN sensor	never received (boot-up timeout)	22 - Message missing	Severe	1. WAS Not powered 2. WAS CAN Bus not connected 3. Incorrect parameter setting of WAS source address or PGN
			message lost (timeout)	9 - Abnormal update rate	Severe	1. WAS lost CAN bus or power connection

Category	SPN	Signal Name	Failure mode	FMI	Severity Level	Possible Root cause(s)
						2. Wrong message timing
			invalid CRC or message sequence	19 - Received network data in error	Severe	1. CAN bus disturbance 2. Incorrect WAS message implementation
			invalid position value	2 - Data erratic, intermittent or incorrect	Severe	WAS data out of range
			Signal exceeded calibration limit	13 - Out of calibration	Severe	1. Wheel angle sensors are not calibrated properly. 2. Vehicle geometry has changed and it is now possible to steer the wheels further than the calibrated max points. 3. Mechanical link integrity lost
Diagnostic functions	520204	EH-main spool monitoring	EH spool position greater than setpoint	7 - Mechanical system not responding or out of adjustment	Severe	1. EH-Spool out of control
			Not in neutral at startup	28 - Not in neutral at Power-up	Severe	EH-Spool not in neutral at startup
Diagnostic functions	520206	Safe ON-Road Monitoring	Switch stuck closed	30 - Stuck Closed	Severe	1. Road switch relay failure (relay is not able to disconnect load)
			Switch state undefined	2 - Data erratic, intermittent or incorrect	Severe	1. AD3 Road switch signal in undefined range
			Switch state missing	22 - Message missing	Severe	AD3 Road switch signal not able to stabilize within valid range during initialization
			Switch state crosscheck failed	25 - Signal crosscheck failed	Severe	If P3072 = 255: 1.Internal failure If P3072 = 0 & P3237 = 255: 1.Mismatch in Road switch states between DOUT resistance and AD3 voltage signal
Diagnostic functions	520208	Demanded safe state	externally triggered safe state	31 - Condition exists	Severe	Controller forced to safe state by peer controller via SPI. This happens for example when one of the controllers detects a failure, which the other controller is not capable of detecting
Diagnostic functions	520210	Cut-off solenoid	unable to cut pilot flow to PVED	29 - Stuck Open	Severe	Internal hydraulic failure in OSPE/EHi
			Synchronization failed	19 - Received network data in error	Severe	Internal failure
Diagnostic functions	299023	Coils Supply Switch	Self-test failed	12 - Bad intelligent device or component	Severe	Internal failure
			Safety switch state not in sync with operation	2 - Data erratic, intermittent or incorrect	Severe	Internal failure
			Synchronization failed	19 - Received network data in error	Severe	Internal failure
Diagnostic functions	520211	Overvoltage supervisor	Self-test failed	12 - Bad intelligent device or component	Severe	Internal failure
			Synchronization failed	19 - Received network data in error	Severe	Internal failure
Internal Hardware	520582	+5V	+5V signal out of range	2 - Data erratic, intermittent or incorrect	Severe	Internal failure
Internal Hardware	298967	CAN-bus	CAN bus off and recovered	19 - Received network data in error	Severe	1. CAN bus disturbance 2. No/insufficient termination on the CAN bus network 3. Shortcut or wire breakage on CAN bus wire
			Address arbitration lost	11 - Unknown root-cause	Severe	Address conflict on the CAN bus
			Internal CAN Rx buffer overflow	12 - Bad intelligent device or component	Severe	Excessive number of messages intended for PVED CLS
			Internal CAN Tx buffer overflow for CAN priority 3 (safety related messages)	0 - Data valid, but above normal operational range - Most severe level	Severe	Excessive number of Priority 3 messages

Category	SPN	Signal Name	Failure mode	FMI	Severity Level	Possible Root cause(s)
			Internal CAN Tx buffer overflow for CAN priority 6 (status messages)	15 - Data valid, but above normal operating range - Least severe level	INFO	Excessive number of Priority 6 messages
Internal Hardware	299029	EEPROM	Verified write fails on EEPROM cell	12 - Bad intelligent device or component	Severe	Internal failure
Internal Hardware	520212	LVDT sinus signal	LVDT sinus frequency out of range	8 - Abnormal frequency or pulse width or period	Severe	Internal failure
Internal Hardware	520585	Vref generation	Vref signal out of range	2 - Data erratic, intermittent or incorrect	Severe	Internal failure
Internal Hardware	520586	GND level	GND level above upper limit	3 - Voltage above normal or short-circuit to high source	Severe	Internal failure
Internal Hardware	520588	LVDT demod A	LVDT demo A signal out of range	2 - Data erratic, intermittent or incorrect	Severe	Internal failure
Internal Hardware	520589	LVDT demod B	LVDT demo B signal out of range	2 - Data erratic, intermittent or incorrect	Severe	Internal failure
Software	520229	Soft error	Soft error detected	31 - Condition exists	Severe	Internal failure
Software	520213	SPI Communication	Connection loss	11 - Unknown root-cause	Severe	Internal failure
			SPI message queue full	2 - Data erratic, intermittent or incorrect	Severe	Internal failure
Software	1557	RAM test	RAM-code test fails	12 - Bad intelligent device or component	Severe	Internal failure
Software	520579	EEPROM VPS data	Parameter value out of range/Incorrect configuration of EEPROM data	2 - Data erratic, intermittent or incorrect	Severe	1. Parameter setting out of range 2. Incorrect sector CRC
			Approval CRC failure	14 - Special instructions	Severe	1. Incorrect Approval CRC
Software	520232	EEPROM Hydraulic config	Parameter value out of range/Incorrect configuration of EEPROM data	2 - Data erratic, intermittent or incorrect	Severe	1. Parameter setting out of range 2. Incorrect sector CRC
			Approval CRC failure	14 - Special instructions	Severe	1. Incorrect Approval CRC
Software	520618	EEPROM N-axis Config	Parameter value out of range/Incorrect configuration of EEPROM data	2 - Data erratic, intermittent or incorrect	Severe	1. Parameter setting out of range 2. Incorrect sector CRC
			Approval CRC failure	14 - Special instructions	Severe	1. Incorrect Approval CRC
Software	520234	EEPROM Valve calibration data	Parameter value out of range/Incorrect configuration of EEPROM data	2 - Data erratic, intermittent or incorrect	Severe	1. Parameter setting out of range 2. Incorrect sector CRC
			Approval CRC failure	14 - Special instructions	Severe	1. Incorrect Approval CRC
Software	520235	EEPROM CAN WAS Calibration data	Parameter value out of range/Incorrect configuration of EEPROM data	2 - Data erratic, intermittent or incorrect	Severe	1. Parameter setting out of range 2. Illegal parameter combinations – see section **Error! Reference source not found.** 3. Incorrect sector CRC
			Approval CRC failure	14 - Special instructions	Severe	1. Incorrect Approval CRC
Software	520236	EEPROM Analog Sensor Calibration data	Parameter value out of range/Incorrect configuration of EEPROM data	2 - Data erratic, intermittent or incorrect	Severe	1. Parameter setting out of range 2. Illegal parameter combinations – see section **Error! Reference source not found.** 3. Incorrect sector CRC
			Approval CRC failure	14 - Special instructions	Severe	1. Incorrect Approval CRC
Software	520237	EEPROM Peripherals config	Parameter value out of range/Incorrect configuration of EEPROM data	2 - Data erratic, intermittent or incorrect	Severe	1. Parameter setting out of range 2. Illegal parameter combinations – see section **Error! Reference source not found.** 3. Incorrect sector CRC
			Approval CRC failure	14 - Special instructions	Severe	1. Incorrect Approval CRC
Software	520238	EEPROM N-axis Protocol Data	Parameter value out of range/Incorrect configuration of EEPROM data	2 - Data erratic, intermittent or incorrect	Severe	1. Parameter setting out of range 2. Incorrect sector CRC
			Approval CRC failure	14 - Special instructions	Severe	1. Incorrect Approval CRC

Category	SPN	Signal Name	Failure mode	FMI	Severity Level	Possible Root cause(s)
Software	520239	EEPROM Internal monitoring	Parameter value out of range/Incorrect configuration of EEPROM data	2 - Data erratic, intermittent or incorrect	Severe	1. Parameter setting out of range 2. Incorrect sector CRC
			Approval CRC failure	14 - Special instructions	Severe	1. Incorrect Approval CRC
Software	520245	EEPROM Auto-Calibration config sector	Parameter value out of range/Incorrect configuration of EEPROM data	2 - Data erratic, intermittent or incorrect	Severe	1. Parameter setting out of range 2. Incorrect sector CRC
			Approval CRC failure	14 - Special instructions	Severe	Incorrect Approval CRC
Software	520246	Invalid sensor configuration	Invalid sensor configuration	31 - Condition exists	Severe	If parameter settings are not done as per section **Error! Reference source not found.**
Software	299005	Software Initialisation	Fault in software configuration or initialisation process	11 - Unknown root-cause	Severe	Internal failure
Software	299004	Division by zero	Division by zero	11 - Unknown root-cause	Severe	Internal failure
Software	628	Flash test	Flash test failure	12 - Bad intelligent device or component	Severe	Internal failure
Software	299002	Variable truncation	Variable truncation	11 - Unknown root-cause	Severe	Internal failure
Software	299001	I2C communication	I2C communication failure	12 - Bad intelligent device or component	Severe	Internal failure
Software	520592	Too many errors	Too many errors to handle	0 - Data valid, but above normal operational range - Most severe level	Severe	If more than 5 errors happen at the same time, this error code will be shown by PVED-CLS
Software	298968	Interpolation	Interpolation overflow or underflow or incorrect data	11 - Unknown root-cause	Severe	Internal failure
Software	520577	SVC Parameters	Invalid PWM calibration values	2 - Data erratic, intermittent or incorrect	Severe	Internal failure
Software	298966	Program sequence monitoring	Program sequence monitoring failure	11 - Unknown root-cause	Severe	Internal failure
Software	298965	PSM task	PSM task record buffer full or slow PSM data processing	11 - Unknown root-cause	Severe	Internal failure
Software	520583	LVDT calculation	Denominator used in LVDT calculation out of range	2 - Data erratic, intermittent or incorrect	Severe	Internal failure
Software	1563	Software Mismatch	Software does not match peer controller	31 - Condition exists	Severe	PVED-CLS main controller contains a different software version than the PVED-CLS safety controller
Software	1562	Incompatible Bootloader	Bootloader is not compatible to application	31 - Condition exists	Severe	PVED-CLS main and/or safety controller contains a bootloader version not compatible to the application software
Monitoring	520214	Flow command crosscheck	crosscheck failure	25 - Signal crosscheck failed	Severe	Flow command calculation by PVED-CLS Main controller and PVED-CLS Safety controller. This can happen if fx. Gain parameters are not equal in Main and Safety controller.
			loops to look back in Flow CMD buffer exceeded buffer length	2 - Data erratic, intermittent or incorrect	Severe	Internal failure
Monitoring	520225	EH-Mainspool Position crosscheck	crosscheck failure	25 - Signal crosscheck failed	Severe	Internal failure
Monitoring	520215	Wheel angle crosscheck	cross-check failure	25 - Signal crosscheck failed	Severe	If P3240 is set to 0: Internal failure If P3240 is set to 255: 1. CAN Wheel angle sensors are not calibrated properly. 2. Sensor characteristics have changed. 3. If two physical separated sensors are used, one of them has lost the mechanical connection or has increased hysteresis 4. WAS crosscheck threshold parameter (P3352) does not match the wheel angle sensor mounting. CAN Wheel angle sensor transmit rate of primary and redundant signal deviate too much from each other
Monitoring	520216	Vehicle Speed sensor speed crosscheck	cross-check failure	25 - Signal crosscheck failed	Critical	1. Vehicle speed signal deviation too high between primary and redundant signal 2. Transmit rate of primary and redundant signal deviate too much from each other P3357 & P3358 settings does not fit to the vehicle speed sensor

Category	SPN	Signal Name	Failure mode	FMI	Severity Level	Possible Root cause(s)
Monitoring	520219	N-axis application state crosscheck	cross-check failure	25 - Signal crosscheck failed	Severe	Internal failure
CAN messages	520610	N-axis Master message	never received (boot-up timeout)	22 - Message missing	Severe	1. Master not powered 2. Master CAN Bus not connected 3. Incorrect parameter setting of Master source address or PGN
			message lost (timeout)	9 - Abnormal update rate	Critical	1. Vehicle speed sensor lost CAN bus or power connection 2. Wrong message timing
			invalid CRC or message sequence	19 - Received network data in error	Critical	1. CAN bus disturbance 2. Incorrect Vehicle speed sensor message implementation
			invalid value/error code received	2 - Data erratic, intermittent or incorrect	Critical	Vehicle speed sensor data out of range
CAN messages	520611	N-axis Master wheel angle limit message	never received (boot-up timeout)	22 - Message missing	Severe	1. Other Slave nodes not powered 2. Master CAN Bus not connected 3. Incorrect parameter setting of Master source address or PGN
			message lost (timeout)	9 - Abnormal update rate	Critical	1. Vehicle speed sensor lost CAN bus or power connection 2. Wrong message timing
			invalid CRC or message sequence	19 - Received network data in error	Critical	1. CAN bus disturbance 2. Incorrect Vehicle speed sensor message implementation
			invalid value/error code received	2 - Data erratic, intermittent or incorrect	Critical	Vehicle speed sensor data out of range
Monitoring	520612	N-axis VAA/VAP crosscheck	cross-check failure	25 - Signal crosscheck failed	Critical	1. VAA/VAP deviation too high between primary and redundant signal 2. Transmit rate of primary and redundant signal deviate too much from each other 3. P3377 & P3378 settings does not fit to the VAA/VAP
Monitoring	520613	N-Axis Master Wheel angle limit (R/L) calculation crosscheck	cross-check failure	25 - Signal crosscheck failed	Severe	1. Master Wheel angle limit deviation too high between primary and redundant signal 2. Transmit rate of primary and redundant signal deviate too much from each other 3. P3379 & P3381 settings does not fit to the Master Wheel angle limit
Monitoring	520614	N-Axis Master Wheel angle crosscheck	cross-check failure	25 - Signal crosscheck failed	Critical	1. Master Wheel angle deviation too high between primary and redundant signal 2. Transmit rate of primary and redundant signal deviate too much from each other 3. P3380 & P3382 settings does not fit to the Master Wheel angle
Monitoring	520615	Wheel alignment mismatch detected after maximum time-out	cross-check failure	25 - Signal crosscheck failed	Severe	1. Missing pump pressure 2. Incorrect setting of Time out parameter P3094
Monitoring	520616	Wheel angle limit on demand flag from MMI message cross check	cross-check failure	25 - Signal crosscheck failed	Critical	1. Wheel angle limit on demand flag not in sync between primary and redundant signal 2. Transmit rate of primary and redundant signal deviate too much from each other 3. P3383 settings does not fit to the Wheel angle limit on demand flag

Category	SPN	Signal Name	Failure mode	FMI	Severity Level	Possible Root cause(s)
Monitoring	520617	Externally triggered pre-safe state	External error observed in the system	31 – Condition exists	Critical	1. Externally triggered, see other submitted errors codes.

FMI list

Standard FMIs from J1939-73 Appendix A page 130 are used as much as possible. However, in some cases some of the reserved area FMI's are redefined to suit the need.

Index	Failure mode
0	0 - Data valid, but above normal operational range - Most severe level
1	1 - Data valid, but below normal operational range - Most severe level
2	2 - Data erratic, intermittent or incorrect
3	3 - Voltage above normal or short-circuit to high source
4	4 - Voltage below normal or short-circuit to low source
5	5 - Current below normal or open circuit
6	6 - Current above normal or grounded circuit
7	7 - Mechanical system not responding or out of adjustment
8	8 - Abnormal frequency or pulse width or period
9	9 - Abnormal update rate
10	10 - Abnormal rate of change
11	11 - Unknown root-cause
12	12 - Bad intelligent device or component
13	13 - Out of calibration
14	14 - Special instructions
15	15 - Data valid, but above normal operating range - Least severe level
16	16 - Data valid, but above normal operating range - Moderately severe level
17	17 - Data valid, but below normal operating range - Least severe level
18	18 - Data valid, but below normal operating range - Moderately severe level
19	19 - Received network data in error
20	20 - Data drifted high
21	21 - Data drifted low
22	22 - Message missing
23	23 - Unintended Steering
24	24 - Reserved
25	25 - Signal crosscheck failed
26	26 - No steering
27	27 - Unable to return to neutral
28	28 - Not in neutral at Power-up
29	29 - Stuck Open
30	30 - Stuck Closed
31	31 - Condition exists

TROUBLESHOOTING – TYPICAL FAULTS

Symptom	PVED-CLS operational status	Cause/solution
No actuation	Operational	1. No or insufficient pressure is supplied to the valve. 2. Flow/angle limited parameters set to ~0 3. System is in road mode
	Fault	1. Any missing or incorrect input signal/message + wrong parameterization from steering sensors/switches at the AD1, AD2, AD3 or CAN interface. 2. Insufficient electrical power supply to the PVED-CLS 3. Connector or wiring harness problem 4. Missing wheel angle- or valve calibration
	No status available	1. CAN bus not operational. Check connection. 2. No electric power supply 3. Check CAN message addresses 4. PVED-CLS is damaged.
Opposite actuation	Operational	1. Hoses between valve and steering actuator are swapped 2. Parameter; Invert Flow Direction; (P3080), is set to 255 and PVED-CLS is mounted on a OSPE/EHi or P3080 is set to 0 and PVED-CLS is mounted on a EHPS
Slow actuation responds (delays)	Operational	1. Air is trapped in the steering actuator or hoses. 2. Oil has high viscosity. Make sure to apply to the technical requirements listed in the Danfoss document OSPE Steering valve, SASA sensor, Technical information 3. The requested pressure is supplied with some delay (Pump).
Snake-movement or shaky-movement in auto-guidance mode	Operational	1. Shaky-movement: The Open loop dead-band parameters P1 and/or P2 (P1: P3166 + P3170; P2: P3168 + P3170) is set too aggressive (in flow range) or the Closed loop dead-band edge, Left/Right (P3166 and P3168) are set too conservative (inside hydraulic dead-band) 2. Snake-movement: The Open loop dead-band parameters P1 and/or P2 (P1: P3166 + P3170; P2: P3168 + P3170) is set too conservative (inside hydraulic dead-band) or the Closed loop dead-band edge, Left/Right (P3166 and P3168) are set too aggressive (in flow range)
Actuation with low gain (less flow than expected)	Operational	1. The offset dead-band CL parameter (P3170) is set too low (inside dead-band) or the left/right dead-band OL parameters (P3166 and P3168) are set too low (inside dead-band). 2. Parameter Valve capacity (P3088) is set greater than the true flow capacity of the valve 3. Parameters Max Spool Position Let/Right (P3162/P3164) is set too low 4. Steering programs not set up correctly – see section „N-axis related control functions“
PVED-CLS does not enter normal operation and stays in bootloader after software download	Fault	1. Wrong software downloaded to one of the microcontrollers inside PVED-CLS. Make sure the correct software is downloaded to the correct controller

ENGINEERING TOMORROW

Products we offer:

- Bent Axis Motors
- Closed Circuit Axial Piston Pumps and Motors
- Displays
- Electrohydraulic Power Steering
- Electrohydraulics
- Hydraulic Power Steering
- Integrated Systems
- Joysticks and Control Handles
- Microcontrollers and Software
- Open Circuit Axial Piston Pumps
- Orbital Motors
- PLUS+1® GUIDE
- Proportional Valves
- Sensors
- Steering
- Transit Mixer Drives

Danfoss Power Solutions is a global manufacturer and supplier of high-quality hydraulic and electronic components. We specialize in providing state-of-the-art technology and solutions that excel in the harsh operating conditions of the mobile off-highway market. Building on our extensive applications expertise, we work closely with our customers to ensure exceptional performance for a broad range of off-highway vehicles.

We help OEMs around the world speed up system development, reduce costs and bring vehicles to market faster.
Danfoss – Your Strongest Partner in Mobile Hydraulics.

Go to www.powersolutions.danfoss.com for further product information.

Wherever off-highway vehicles are at work, so is Danfoss.

We offer expert worldwide support for our customers, ensuring the best possible solutions for

outstanding performance. And with an extensive network of Global Service Partners, we also provide comprehensive global service for all of our components.

Please contact the Danfoss Power Solution representative nearest you.

Copyright 2016 Danfoss
Available to Danfoss
and licensed Customers **only**

Comatrol
www.comatrol.com
Turolla
www.turollaocg.com
Valmova
www.valmova.com
Hydro-Gear
www.hydro-gear.com
Daikin-Sauer-Danfoss
www.daikin-sauer-danfoss.com

Local address:

Danfoss
Power Solutions (US) Company
Hai Rd 2800 East 13th Street

District Ames, IA 50010, USA
Phone: +1 515 239 6000

Danfoss
Power Solutions GmbH & Co. OHG
Krokamp 35

D-24539 Neumünster, Germany
Phone: +49 4321 871 0

Danfoss
Power Solutions ApS
Nordborgvej 81

DK-6430 Nordborg, Denmark
Phone: +45 7488 2222

Danfoss
Power Solutions
(Shanghai) Co. Ltd.
Building # 22, No. 1000 Jin Jin Qiao, Pudong New
Shanghai, China 201206
Phone: +86 21 3418 5200

Danfoss can accept no responsibility for possible errors in catalogues, brochures and other printed material. Danfoss reserves the right to alter its products without notice. This also applies to products
already on order provided that such alterations can be made without sub sequential changes being necessary in specifications already agreed.
All trademarks in this material are property of the respective companies. Danfoss and the Danfoss logotype are trademarks of Danfoss A/S. All rights reserved.