PVED-CLS Controller For Electrohydraulic Steering

Communication Protocol

Version 3.42

Revisions and references

Revision history

Date	Change	Revision
20 Mar 2014	Moved to official document template. Revision 3.00 is equal to revision 2.17 in the old template with some exceptions: - XID's changed in WAS calibration due to conflicts. - Cosmetic corrections - Change in status message 6 where "loops to lock back in flow cmd buffer" is now replaced with "actual spool monitoring timeout"	3.00
07 Apr 2014	Changes based on review #606	3.01
24 April 2014	Added tags for CANalyzer DBC database along with smaller cosmetic corrections from review #606	3.02
19 May 2014	Correction of copy paste mistake on page 30	3.03
21 May 2014	PGN with offset corrected in many messages. Default PGN now shown in () Description of comments in DBC-file added.	3.04
23 May 2014	WAS2 added to status message 6	3.05
28 May 2014	Default address for AUX_STW changed	3.06
04 June 2014	Small bug fix in chapter 5.3.5 – byte 3	3.07
12 June 2014	Clarification of message layout in chapter 5.1 (Enter service mode) Chapter 15.2 updated with better representation of parameter read reply	3.08
19 June 2014	Error code 10 added to "5.3.5 Calibration status"	3.09
23 June 2014	Chapter 5.3.5: Byte 4 indicates calibration progress	3.10
03 July 2014	Chapter 5.3.1: Bit 5 and 6 are included in byte 2. Chapter 15: A note on encoding of data address is added.	3.11
08 July 2014	Chapter 5.3.5: DBC tag added for calibration progress Chapter 5.3.5: Added: 11 Can't calibrate valve within spool set point limits	3.12
25 July 2014	Note added to messages with different DLC than 8. Calibration status message updated	3.13
31 July 2014	Enter service mode and Parameter read message changed to have DLC 8	3.14
11 August 2014	Chapter 5.3.5: Time needed to complete the last move rescaled to be able to indicated timeout and time not recorded yet	3.15
15 August 2014	Chapter 7.10: End to end CRC and running number is added. Software version which supports this functionality is to be announced (planned for end October)	3.16
26 August 2014	Chapter 5.3.5: Clarification of byte 7+8	3.17
4 September 2014	Chapter 5.1.1: Byte 2 changed from IR to 0,1deg	3.18
24 September 2014	Chapter 7.10: CANalyzer signal tags are added for all fields.	3.19
07 October 2014	Updated Calibration status message with new error codes	3.20
10 October 2014	Corrected an issue in section 16.5 J1939 ACK msg	3.21
24 November 2014	Submitted to technical writer for final layout	
30 November 2014	Missing abbreviations added to the abbreviations list	3.22
02 February 2015	Spool control and spool monitoring flag added to status message 5	3.23
24 February 2015	Extended message identifiers removed from proprietary B messages New MMI message configuration in 1.93 added	3.24
25 February 2015	Implementation note on safety measures on OP status message removed	3.25
02 March, 2015	J1939 Component ID and Software ID PGN requests added	3.26
11 March, 2015	J1939 Software ID response corrected	3.27
12 March 2015	Cosmetic correction in BAM busy message for requesting Software ID MMI message configuration implemented for 1.93 added in table 2	3.28
26 March 2015	Corrected MMI messages to use XID when configured to proprietary A	3.29
14 April 2015	Note 2 in section 8.3 on transmission of GMS in different operation states	3.30
16 June 2015	Note added to primary and redundant MMI message that the GPS receiver selection and lockout signal has no function in 1.93 and earlier software versions	3.31
06 October 2015	Status message 2 (section 7.3) updated with information about the source of the reported closed loop wheel angle set-point. Closed loop joystick related AUX messages added (section 13.3)	3.32
06 October 2015	Guidance state machine (section 8.3) has been updated with conditions related to an auxiliary steering device of the closed loop joystick type.	3.33
27 October 2015	Guidance machine status (section 8.2) updated according to ISO11783-7:2015	3.34
23 November 2015	Joystick OL and CL messages merged to a single message	3.35
18 December 2015	Added note to new GMS message layout Redrawn Auto-Guidance communication state machine	3.36
18 December 2015	Added support for analog joystick calibration	3.37

26 January 2016	Added details to OP status message for analog joystick calibration Corrected information in the enter service mode message Corrected information in the Position capture request message	3.38
03 February 2016	Added status message 7 and status message request 2 Removed Notes from Enter service mode message and GMS to indicate that some functionality is not available in earlier versions	3.39
09 February 2016	Added Joystick flow request signal to status message 7	3.40
05 April 2016	Added service mode state "No analog joystick configured" as a service mode state in OP status message Corrected DBC tags for the "status message request 2" message Added Calibration error codes for added crosschecks in WAS calibration Corrected Parameter address for Steering feedback transmission rate on page 12 Cosmetic corrections	3.41
28 July 2016	Added section on Elobau joystick CAN communication. Version number added on the front page. Errata section added GMS state machine corrected Changes based on internal review #1452	3.42

Document references

Literature
PVED-CLS KWP2000 protocol
PVED-CLS Safety Manual
PVED-CLS User Manual

Definitions and Abbreviations

ACK	Acknowledgement
AUX	Auxiliary
CAN	Controller Area Network
CRC	cyclic redundancy check
DA	Destination address
DLC	Data length content
DTC	Diagnostic Trouble Code
EH	electro-hydraulic a type of valve used in steering applications
FMI	Failure Mode Identifier
GPS	Global Positioning System
ISO	International Standard Organization
ISOBUS	communication protocol based on J1939, defined by ISO 11783
J1939	CAN communication protocol defined by SAE
KWP2000	Keyword Protocol 2000, a communication protocol used for on-board vehicle diagnostic systems; standardized as ISO 14230
LSB	Least significant byte
MAIN UC	main micro-controller, the one controlling the proportional valve
MMI	Man Machine Interface
MSB	Most significant byte
PGN	Parameter Group Number
PVED	Proportional Valve Electronic Digital
PVED-CL	a special type of PVED developed for steering

	applications
PVED-CLS	a special type of PVED being developed for new steering applications
RPM	rotation per minute
SA	Source address
SAE	Society of Automotive Engineers
SAFETY UC	the micro-controller in the safety related channel, the one controlling the cut-off valve
SEHS	Safe EH Steering
SPN	Suspect Parameter Number
STW	steering wheel
TBD	to be defined
UC	micro-controller
VSP	vehicle speed
WA	wheel angle
XID	extended message identifier

Table of Contents

1 INTRODUCTION 7

1.1 Errata information 7

2 HIGH LEVEL REQUIREMENTS 7

3 CANALYZER DBC FILE 8

3.1 DBC Message comments 8

4 NETWORK MANAGEMENT PROTOCOL 8

4.1 Address arbitration 8
4.2 Address Claimed [ADR_CLAIMED_X] 10
4.3 Cannot Claim Address [ADR_NOT_CLAIMED_X] 11
4.4 Request for Address Claimed [CLAIMED_ADR_REQ] 12
4.5 PVED-CLS source address selection 12
4.6 PVED-CLS broadcast message PGN configuration 13
4.7 CAN Sensor Signal Input Mapping 14

5 SERVICE MODE MESSAGES 15

5.1 Enter Service Mode [SER_TOOL_REQ_X] 15
5.2 Direct output control 16
5.2.1 Direct output control request [SER_TOOL_REQ_X] 16
5.2.2 Direct output control reply [SER_TOOL_REPLY_X] 17
5.3 External Sensor Calibration 18
5.3.1 Position Capture Request [SER_TOOL_REQ_X] 18
5.3.2 Position Capture Reply [SER_TOOL_REPLY_X] 19
5.3.3 Parameter update request [SER_TOOL_REQ_X] 20
5.3.4 Calibration reset request [SER_TOOL_REQ_X] 21
5.3.5 Calibration status [SER_TOOL_REPLY_X] 22
5.1 Spool calibration 24
5.1.1 Spool calibration start request [SER_TOOL_REQ_X] 24
5.1.2 Parameter Update Request [SER_TOOL_REQ_X] 25
5.1.3 Calibration Reset Request [SER_TOOL_REQ_X] 25
5.1.4 Calibration Status [SER_TOOL_REPLY_X] 25

6 SOFT RESET 26

6.1 Soft Reset request [SER_TOOL_REQ_X] 26
6.2 Soft Reset reply [SER_TOOL_REPLY_X] 26

7 STATUS MESSAGES 27

7.1 Status message request [SER_TOOL_REQ_X] 27
7.2 Status message request 2 [SER_TOOL_REQ_X] 28
7.3 Status message 1 [STAT_MSG_1_X] 30
7.4 Status message 2 [STAT_MSG_2_X] 31
7.5 Status message 3 [STAT_MSG_3_X] 32
7.6 Status message 4 [STAT_MSG_4_X] 34
7.7 Status message 5 [STAT_MSG_5_X] 35
7.8 Status message 6 [STAT_MSG_6_X] 38
7.9 Status message 7 [STAT_MSG_7_X] 39
7.10 Operation status message [STAT_MSG_OP_X] 40

8 AUTO-GUIDANCE RELATED CAN MESSAGES 43
8.1 Guidance system Command [GPSX_GMC] 43
8.2 Guidance machine status [GPSX_GMS] 44
8.3 Guidance state machine 46
9 STEERING WHEEL MESSAGES 50
9.1 STW primary message [STW_P] 50
9.2 STW Redundant message [STW_R] 52
10 VEHICLE SPEED MESSAGES 53
10.1 VSP primary message [VSP_P] 53
10.2 VSP redundant message [VSP_R] 54
11 MMI MESSAGES 55
11.1 MMI primary message [MMI_P] 55
11.2 MMI redundant message [MMI_R] 56
12 WHEEL ANGLE SENSOR MESSAGES 58
12.1 WAS Primary message [WAS_P] 58
12.2 WAS Redundant message [WAS_R] 59
13 AUX SENSOR MESSAGES 60
13.1 AUX sensor as a mini wheel 60
13.1.1 AUX Primary message [AUX_STW_P] 60
13.1.2 AUX Redundant message [AUX_STW_R] 62
13.2 AUX sensor as a joystick 64
13.2.1 AUX Primary message [AUX_JOY_P] 64
13.2.2 AUX Redundant message [AUX_JOY_R] 65
13.3 Elobau joystick 67
13.3.1 Primary Elobau message [ELOBAU_P] 67
13.3.2 Redundant Elobau message [ELOBAU_R] 68
14 STEERING FEEDBACK MESSAGE [STR_FB_MSG_X] 70
15 PARAMETER READ RELATED MESSAGES 71
15.1 Parameter read request [SER_TOOL_REQ_X] 71
15.2 Parameter read reply [SER_TOOL_REPLY_X] 72
16 J1939-73 DIAGNOSTICS 73
16.1 DM1 – Active diagnostic trouble codes [DM1_X] 73
16.2 Request PGN [REQ_PGN_X] 74
16.3 DM2 – Previously Active diagnostic trouble codes [DM2_X] 75
16.4 DM3 – Diagnostic data clear/reset of previously active diagnostic trouble codes [DM3_X] .. 76
16.5 Acknowledgement (J1939-21) [J1939_ACK_X] 77
16.6 Component ID [J1939_COMP_ID_X] 78
16.7 Software ID [J1939_SW_ID_X] 81

1 Introduction

This document has been created in order to present the communication protocol implemented in PVED-CLS – a controller in the Electro-Hydraulic Power Steering system.
This document describes all J1939 CAN messages used in PVED-CLS for communicating with external sensors, MMI and auto-guidance controllers. Furthermore, it describes the J1939 diagnostic protocol, the service mode direct output control and the calibration features implemented in PVED-CLS.

1.1 ERRATA INFORMATION

The latest errata information is always available on the Danfoss homepage via following link:
HTTP://POWERSOLUTIONS.DANFOSS.COM/PRODUCTS/STEERING/PVED-CLS-INTELLIGENT-STEERING-SUB-SYSTEM/

It contains errata information for:

- PVED-CLS boot loader
- PVED-CLS application
- Documentation
- PLUS+1 Service tool
- Other topics related to the steering system

If further information to any errata is required, contact your nearest Danfoss Product Application Engineer

Attention	The system integrator and/or responsible for the target system is advised to periodically observe the errata information as new information will be added as needed.

2 High level requirements

The baud rate of 250 kbps is used in PVED-CLS.

The application uses the J1939 CAN protocol, mostly the proprietary messages A and B.

To follow the J1939 suggestions, the following rules will apply if not stated otherwise:

- The data byte numbering will start from 1;
- The bit numbering will start from 1;
- Multiple byte data will be encoded in Intel style (little-endian, LSB first);
- Valid ranges of signals which would normally require signed data types will be limited to positive values and a proper offset will be specified.

If not stated otherwise, the J1939 defined message priority is 6.

PVED will accept messages addressed both explicitly to it and to all nodes on the CAN bus - destination address set to 0xFF.

3 CANalyzer DBC file

For the PVED-CLS a CANalyzer DBC file is available. To have a link from this document to the DBC file, CAN messages DBC naming is marked inside [brackets]. This goes for names of CAN messages and signal names.
In the DBC file, the '_X' inside of brackets are replaced with '_M' for messages from Main controller and '_S' for messages from Safety controller.
The service messages are only distinguished by the XID. The names assigned to the corresponding XID is inside {Curly Brackets}
As a special case the XID [Position capture reply] will only be sent from Main. The message contains information [Reply_result_from_ECU]. Dependent on that signal postfix shall be either '_M' or '_S'
'GPSX' is replaced with 'GPS1' or 'GPS2'.

Values are scaled to meaningful units. In cases where values correspond to text strings, these are decoded.
Values related to spool position and set point are scaled to [10um]
Values related to time are scaled to [ms]
Values related to voltage are scaled to [mV]
Values related to current are scaled to [mA]
Values related to speed are scaled to [kmph]
Values related to angular speed are scaled to [RPM]
Values related to angular position are scaled to [degrees]
Values related to curvature command and estimated curvature are scaled to [km^{-1}]

[CLAIMED_ADR_REQ]:	SA and DA can be any address
[SER_TOOL_REQ_X]:	SA can be any address
[SER_TOOL_REPLY_X]:	DA can be any address

3.1 DBC MESSAGE COMMENTS

All messages in the database has comments that identify which ECU they are related to and if they are cyclic or event based.

Cyclic messages (Status messages, STW, AUX, GPS, DM1 etc.) have the comment 'Main_C' or 'Safe_C'.
Event based messages (Address claim, service mode messages etc.) have the comment 'Main_E' or 'Safe_E'.

4 Network Management Protocol

4.1 ADDRESS ARBITRATION

PVED-CLS nodes claim their Source Addresses, i.e. broadcast their Address Claimed messages, once the initialization and the power-up tests have been completed.

After the initial, power-up, Address Claimed message has been transmitted a PVED-CLS node will give other CAN nodes 250 ms for evaluating the broadcast NAME and possibly re-claiming the address. In this period of time the PVED-CLS node will not transmit any messages other than Address Claimed or Cannot Claim Address as required by the J1939-defined address arbitration procedure.
If a PVED-CLS node has not lost an address arbitration and receives an Address Claim message from another CAN node which claims the same address, it will compare the other node's NAME with its own and:
transmit the Address Claimed message if it has won the address arbitration;
transmit the Cannot Claim Address message and enter the safe state if it has lost the address arbitration.
The above mentioned messages will be transmitted no later than 100 ms after the Address Claimed message from another node has been received.
If a PVED-CLS node has lost the address arbitration, it will not transmit any message other than the Cannot Claim Address upon the explicit request – the broadcast Request for Address Claimed PGN.
If no address arbitration took place or the address arbitration has been won, a PVED-CLS node will transmit the Address Claimed message upon the request – the Request for Address Claimed PGN, either broadcast or addressed to the node.

4.2 ADDRESS CLAIMED [ADR_CLAIMED_X]

Priority: 6
PGN: 60928 (0xEE00)
Occurrence: as specified in the section about the address arbitration
Sent by: PVED-CLS
Sent to: all nodes if as the first message after power-up or as a step in the address arbitration procedure or a specific node if upon a request from this node

Bytes	Encoding	Value/Range	Description
1	U8	0x06	J1939 defined NAME with SEHS specific data: Identity Number (21 bits) = 0x06 Manufacturer Code (11 bits) = 0x39 ECU instance (3 bits) = 0x01(MainUC) 0x02(SafetyUC) Function instance (5 bits) = Specified by P3310 (default = 0) Function (8 bits) = 0x10 Reserved (1 bit) = 0 Vehicle system (7 bits) = 0 Vehicle system instance (4 bits) = 0 Industry group (3 bits) = 0 Arbitrary Address capable (1 bit) = 0 For more information see J1939-81: Chapter: 4.2.1.1
2	U8	0x00	
3	U8	0x20	
4	U8	0x07	
5	U8	Bits 1..3: ECU instance [ECU_instance] Bits 4..8: Function instance [Function_instance]	
6	U8	0x10	
7	U8	0x00	
8	U8	0x00	

4.3 CANNOT CLAIM ADDRESS [ADR_NOT_CLAIMED_X]

Priority: 6
PGN: 60928 (0xEE00)
Occurrence: as specified in the section about the address arbitration
Sent by: PVED-CLS – **the source address of 0xFE is used**
Sent to: all nodes if as a step in the address arbitration procedure or a specific node if upon a request from this node

Bytes	Encoding	Value/Range	Description
1	U8	0x06	J1939 defined NAME with SEHS specific data: Identity Number (21 bits) = 0x06 Manufacturer Code (11 bits) = 0x39 ECU instance (3 bits) = 0x01(MainUC) 0x02(SafetyUC) Function instance (5 bits) = Specified by P3310 (default = 0) Function (8 bits) = 0x10 Reserved (1 bit) = 0 Vehicle system (7 bits) = 0 Vehicle system instance (4 bits) = 0 Industry group (3 bits) = 0 Arbitrary Address capable (1 bit) = 0 For more information see J1939-81: Chapter: 4.2.1.1
2	U8	0x00	
3	U8	0x20	
4	U8	0x07	
5	U8	Bits 1..3: ECU instance [ECU_instance] Bits 4..8: Function instance [Function_instance]	
6	U8	0x10	
7	U8	0x02	
8	U8	0x00	

4.4 REQUEST FOR ADDRESS CLAIMED [CLAIMED_ADR_REQ]

Refer to section 16.2 for the format of Request PG message.
The claimed addresses can be retrieved by issuing a request for claimed address to all nodes on the CAN bus. In the below example, the guidance controller (0x1C) requests the claimed addresses.

Message ID	DLC	Byte 1	Byte 2	Byte 3
0x18EAFF1C	3	0x00	0xEE	0x00

Destination specific request for claimed address is also accepted. In the below example, the guidance controller (0x1C) requests the claimed address of the PVED-CLS main controller (0x13)

Message ID	DLC	Byte 1	Byte 2	Byte 3
0x18EA131C	3	0x00	0xEE	0x00

4.5 PVED-CLS SOURCE ADDRESS SELECTION

The PVED-CLS claims two addresses; one for the main controller and one for the safety controller. The source address can be programmed via the parameter shown in the below table.

CAN node	Source Address parameter	Recommended value
Main controller	P3297	0x13
Safety controller	P3297	0x5A

Table 1 PVED-CLS source addresses

Recommended value infers the default value.

WARNING The system integrator must ensure that the J1939 source addresses for the main and safety controller are different.

4.6 PVED-CLS BROADCAST MESSAGE PGN CONFIGURATION

The proprietary B message IDs are configurable as shown in Table 2. The PGN and the source address (SA) of the respective proprietary B message can be customized to a particular CAN network by setting the respective parameters.
The parameter addresses are the same for both the main and the safety controller.
See Table 3 for configuring the main and safety controller.

Message	Dir	Priority	PGN (MSB)	PGN offset parameter	SA
Status Message 1	Tx	6	0xFF	P3312	See Table 1
Status Message 2	Tx	6	0xFF	P3313	
Status Message 3	Tx	6	0xFF	P3314	
Status Message 4	Tx	6	0xFF	P3315	
Status Message 5	Tx	6	0xFF	P3316	
Status Message 6	Tx	6	0xFF	P3317	
Status Message 7	Tx	6	0xFF	P3328	
Operational Status	Tx	6	0xFF	P3311	
Steering Feedback	Tx	3	0xFF	P3323	
Vehicle Speed Sensor	Rx	3	0xFF	P3318	P3294
Steering Wheel Sensor	Rx	3	0xFF	P3319	P3296
Wheel Angle Sensor	Rx	3	0xFF	P3320	P3298
AUX sensor (mini steering wheel)	Rx	3	0xFF	P3321	P3299
AUX sensor (Joystick)	Rx	3	0xFF	P3322	P3300
AUX sensor (Elobau Joystick)	Rx	3	P3329		P3300
Autoguidance#1 message	Rx	3	0xAD00	-	P3292
Autoguidance#2 message	Rx	3	0xAD00	-	P3293
MMI	Rx	3	See note 1	See note 1	P3295

Table 2 PVED-CLS broadcast message PGN configuration

Note 1: MMI messages can be configured to be Proprietary A or B. The message format is set by P3324.
If configured to proprietary A format (default), the message layout is:
CAN ID: 0x0CEF <DA_P3297> <SA_P3295>
If configured to proprietary B format, the message layout is:
CAN ID: 0x0CFF <PGN_offset_P3325> <SA_P3295>

4.7 CAN SENSOR SIGNAL INPUT MAPPING

The below table shows how the PVED-CLS main and safety controller shall be parameterized in order to correctly receive primary and redundant sensor CAN messages. The table is populated with default parameter values as examples.

Sensor message	Default message ID	MAIN controller parameter	SAFETY controller parameter
Vehicle Speed – Primary	0x0CFF40FB	P3294 = 0xFB P3318 = 0x40	
Vehicle Speed – Redundant	0x0CFF41FB		P3294 = 0xFB P3318 = 0x41
Steering Wheel Sensor – Primary	0x0CFF104D	P3296= 0x4D P3319 = 0x10	
Steering Wheel Sensor – Redundant	0x0CFF114D		P3296= 0x4D P3319 = 0x11
Wheel Angle Sensor- Primary	0x0CFF12FA	P3298 = 0xFA P3320 = 0x12	
Wheel Angle Sensor- Redundant	0x0CFF13FA		P3298 = 0xFA P3320 = 0x13
Auxiliary Steering Device (Mini STW) - Primary	0x0CFF144F	P3299 = 0x4F P3321 = 0x14	
Auxiliary Steering Device (Mini STW) – Redundant	0x0CFF154F		P3299 = 0x4F P3321 = 0x15
Auxiliary Steering Device (Joystick) - Primary	0x0CFF164E	P3300 = 0x4E P3322 = 0x16	
Auxiliary Steering Device (Joystick) – Redundant	0x0CFF174E		P3300 = 0x4E P3322 = 0x17
Auxiliary Steering Device (Elobau Joystick) – Primary	0x0CFDD64E	P3300 = 0x4E P3329 = 0xFDD6	
Auxiliary Steering Device (Elobau Joystick) – Redundant	0x0CFDD64E		P3300 = 0x4E P3329 = 0xFDD6
Guidance System Command #1	0x0CAD131C	P3292 = 0x1C P3297 = 0x13	
Guidance System Command #2	x0CAD131D	P3293 = 0x1D P3297 = 0x13	
Man Machine Interface – Primary	0x0CEF13FC	P3295 = 0xFC P3297 = 0x13	
Man Machine Interface – Secondary	0x0CEF5AFC		P3295 = 0xFC P3297 = 0x5A

Table 3 CAN sensor address mapping

WARNING The system integrator must ensure that the primary and redundant CAN messages are correctly received by the main and safety controller respectively.

5 Service mode messages

5.1 ENTER SERVICE MODE [SER_TOOL_REQ_X]

The J1939 proprietary A message, available at start-up only.

Priority: 6
PGN: 61184 (0xEF00)
XID: 128 {Enter service mode}
Occurrence: if needed, within 200 ms after PVED-CL has broadcast its Address Claim message
Sent by: any node
Sent to: PVED-CLS MAIN micro-controller

Bytes	Encoding	Value/Range	Description
1	U8	128	extended message identifier [SER_TOOL_REQ_XID_X]
2	U8	 0 1 2 3	Requested Service mode [Req_service_mode_X]: Direct Output Control Wheel Angle Sensor Calibration Spool Calibration Joystick Calibration
3	U8	 0xAA 0xA5 0x5A 0x55	check value [Req_service_mode_chk_X]: Direct Output Control Wheel Angle Sensor Calibration Spool Calibration Joystick Calibration
4	U8	 0x55 0xA5 0x5A 0x55	check value [Req_service_mode_chk_X]: Direct Output Control Wheel Angle Sensor Calibration Spool Calibration Joystick Calibration
5..8	-	All 1	Reserved

Note 1: The message will be ignored if the requested Service Mode or the check value is found invalid or if there is a mismatch between the requested Service Mode and the provided check value is detected.
Note 2: PVED-CLS will also accept the message if only bytes 1–4 (DLC = 4) are sent.

5.2 DIRECT OUTPUT CONTROL

5.2.1 Direct output control request [SER_TOOL_REQ_X]

The J1939 Proprietary A message, Available in the Service mode – Direct Output control only

Priority: 6
PGN: 61184 (0xEF00)
XID: 130 {Direct output control req}
Occurrence: When needed
Sent by: any node
Sent to: PVED-CLS MAIN micro-controller

Bytes	Encoding	Value/Range	Description
1	U8	130	extended message identifier [SER_TOOL_REQ_XID_X]
2	Bits 8..7		Requested state of the coils supply switch [CSS_req_X]:
		00	OFF
		01	ON
		10	Reserved
		11	No Change
	Bits 6..5		Requested state of the sensor supply voltage [Req_Sensor5V_X]:
		00	OFF
		01	ON
		10	Reserved
		11	No Change
	Bits 4..1	All 1	Reserved
3, 4	U16		Requested Spool position [Req_spool_pos_X]:
		0..2000	Valid spool position (-1000 Offset) in steps of 10um, where: 0 corresponds to the spool moved 10mm to the left, 1000 is the neutral position 2000 corresponds to the spool moved 10mm to the right
		2001..65279	Reserved
		65280..65535	No Change
5	U8		Requested dutycycle of the Cut-off valve PWM output [Req_COV_PWM_X]:
		0..100	Valid dutycycle [%]
		101	Closed loop current control
		102..254	Reserved
		255	No Change
6..8	-	All 1	Reserved

Note: If a requested value is out of range, ie. Reserved, it will be ignored and the last valid value will be used instead

5.2.2 Direct output control reply [SER_TOOL_REPLY_X]

The J1939 Proprietary A message, Available in the Service mode – Direct Output control only

Priority: 6
PGN: 61184 (0xEF00)
XID: 131 {Direct output control reply}
Occurrence: Upon reception of a Direct output control message
Sent by: PVED-CLS MAIN micro-controller
Sent to: The node which the Direct output control message was received from

Bytes	Encoding	Value/Range	Description
1	U8	131	extended message identifier [SER_TOOL_REPLY _XID_X]
2	Bits 8..7		Requested state of the coils supply switch [Reply_CSS_state_X]:
		00	OFF
		01	ON
		10	Reserved
		11	Information not available
	Bits 6..5		Requested state of the sensor supply voltage [Reply_Sensor5V_state_X]:
		00	OFF
		01	ON
		10	Reserved
		11	Information not available
	Bits 4..1	All 1	Reserved
3, 4	U16		Requested Spool position[Reply_req_spool_pos_X]:
		0..2000	Valid spool position (-1000 Offset) in steps of 10um, where: 0 corresponds to the spool moved 10mm to the left, 1000 is the neutral position 2000 corresponds to the spool moved 10mm to the right
		2001..65279	Reserved
		65280..65535	Information not available
5	U8		Requested dutycycle of the Cut-off valve PWM output [Reply_req_COV_PWM_X]:
		0..100	Valid dutycycle [%]
		101	Closed loop current control
		102..254	Reserved
		255	Information not available
6..8	-	All 1	Reserved

Note: A previously requested value will be reported back if a just requested value has been found beyond the valid range, i.e. a reserved value has been received or no change has been requested

5.3 EXTERNAL SENSOR CALIBRATION

5.3.1 Position Capture Request [SER_TOOL_REQ_X]

The J1939 proprietary A message transmitted in order to make PVED-CLS capture the observed external signal values as defining the specified external sensor position. The messages in this section apply to both analog and CAN based Wheel angle and analog joystick calibration

Priority: 6
PGN: 61184 (0xEF00)
XID: 142 {Pos capture req}
Occurrence: When the wheels or joystick lever is moved to the position which the external signals are to be captured for
Sent by: Any node
Sent to: PVED-CLS MAIN micro-controller

Bytes	Encoding	Value/Range	Description
1	U8	142	extended message identifier [SER_TOOL_REQ_XID_X]
2	Bits 8..7	00 01 10 11	External sensor position to capture [Req_ANS_capture_X]: Leftmost position Neutral position Rightmost position Reserved
	Bits 6..1	All 1	Reserved
6..8	-	All 1	Reserved

Note: The request will be ignored if an invalid analog sensor position is requested to capture

5.3.2 Position Capture Reply [SER_TOOL_REPLY_X]

The J1939 proprietary A message as a reply to the received Position Capture request

Priority: 6
PGN: 61184 (0xEF00)
XID: 143 {Position capture reply}
Occurrence: Upon reception of a Position Capture Request
Sent by: PVED-CLS MAIN micro-controller
Sent to: The node which the Position Capture Request has been received from

Bytes	Encoding	Value/Range	Description
1	U8	143	extended message identifier [SER_TOOL_REPLY _XID_X]
2	Bits 8..7	00 01 10 11	External sensor position captures [Reply_ANS_captured_X]: Leftmost position Neutral position Rightmost position Reserved
	Bit 6	0 1	Position Capture status [Reply_Pos_captured_X]: Position not captured Position captured
	Bit 5	0 1	Micro-Controller which the results come from [Reply_result_from_ECU_X]: Main Micro-controller Safety Micro-controller
	Bits 4..3	00 01 10 11	Micro-controller input signal status [Reply_Input_status_X]: Necessary input signals not available Necessary input signals available Necessary input signals out of valid range Reserved
	Bits 2..1	00 01 10 11	Consistency check status [Reply_Consistency_chk_X]: Consistency check has failed Consistency check has passed Reserved Information not available (some position not yet captured)
3, 4	U16	0..6000	External sensor signal observed at the external analogue input AD1, if analogue sensor is used, or received in the wheel angle sensor CAN messages, if CAN based sensor is used [Reply_AD1_X]: Voltage [mV] or value received in CAN message

		6001..65534 65535	Reserved Information not available (position not captured)
5, 6	U16	0..6000 6001..65534 65535	Analog sensor signal observed at the external analogue input AD2, if analogue sensor is used [Reply_AD2_X]: Voltage [mV] Reserved Information not available (position not captured or the redundant analog sensor not present or a CAN based wheel angle sensor in use)
7, 8	U16	0..6000 6001..65534 65535	Sensor supply voltage [Reply_Sensor_voltage_X]: Voltage [mV] Reserved Information not available (Position not captured or a reply to a request other than capture external sensor neutral position)

Note: Main micro-controller will transmit two messages with result from Main and Safety micro-controller, respectively. In DBC-file, signals have _M or _S postfix relative to [Reply_result_from_ECU].

5.3.3 Parameter update request [SER_TOOL_REQ_X]

The J1939 proprietary A message transmitted in order to make PVED-CLS update the parameter values in the EEPROM

Priority: 6
PGN: 61184 (0xEF00)
XID: 144 {Param update req}
Occurrence: When PVED-CLS reports readiness to update the parameter values in the EEPROM
Sent by: Any node
Sent to: PVED-CLS MAIN micro-controller

Bytes	Encoding	Value/Range	Description
1	U8	144	extended message identifier [SER_TOOL_REQ_XID_X]
2..8	-	All 1	Reserved

5.3.4 Calibration reset request [SER_TOOL_REQ_X]

The J1939 proprietary A message transmitted in order to reset the ongoing or completed/failed calibration process.

Priority: 6
PGN: 61184 (0xEF00)
XID: 146 {Calib reset req}
Occurrence: When needed
Sent by: Any node
Sent to: PVED-CLS MAIN micro-controller

Bytes	Encoding	Value/Range	Description
1	U8	146	extended message identifier [SER_TOOL_REQ_XID_X]
2..8	-	All 1	Reserved

5.3.5 Calibration status [SER_TOOL_REPLY_X]

The J1939 proprietary A message transmitted in order to provide details about the ongoing calibration process.

Priority: 6
PGN: 61184 (0xEF00)
XID: 145 {Calib status}
Occurrence: When additional information needs to be shared
Sent by: PVED-CLS MAIN micro-controller
Sent to: The node which the latest calibration related request has been received from

Bytes	Encoding	Value/Range	Description
1	U8	145	extended message identifier [SER_TOOL_REPLY _XID_X]
2	U8		Calibration error code [Reply_Calib_err_code_X]:
		0	Necessary input signals not available to Main microcontroller
		1	Necessary input signals not available to Safety microcontroller
		2	Input signal cross-check failure
		3	Steering wheel movement observed
		4	Not enough data to perform consistency check
		5	Consistency/Plausibility check failure in Main microcontroller
		6	Consistency/Plausibility check failure in Safety microcontroller
		7	Parameter update failure in Main microcontroller
		8	Parameter update failure in Safety microcontroller
		9	Calibration counter update failure
		10	Invalid wheel angle observed
		11	Can't calibrate valve within spool set point limits
		12	Timeout occurred at move to max point
		13	Calibration input parameters mismatch
		14	Calculated max WA cross check between Main and Safety failed
		15	Calculated Cylinder stroke volume cross check between Main and Safety failed
		16..254	Reserved
		255	No error
3	Bits 8..7		Wheel movement status – left move [Reply_WA_mov_status_L_X]:
		00	In progress

		01 10 11	Completed Reserved Information not available (a right move info or calibration error is reported)
	Bits 6..5	00 01 10 11	Wheel movement status – right move [Reply_WA_mov_status_R_X]: In progress Completed Reserved Information not available (a left move info or calibration error is reported)
	Bits 4..1	All 1	Reserved
4	U8	0..100 101..254 255	Indicates how close the calibration is to success with the last spool set point that met calibration criteria. 100% = calibration done for that side. [Reply_Calibration_progress_X] Reserved Information not available
5, 6	U16	0..2000 2001..65534 65535	Spool set point used during the just completed wheel move [Reply_Spl_set_last_X]: Spool position (-1000 offset) in steps of 10um, where: 0 corresponds to the spool moved 10mm to the left, 1000 is the neutral position and 2000 corresponds to the spool moved 10mm to the right Reserved Information not available (a calibration error is reported)
7, 8	U16	0 10 20..65534 65535	Time needed to complete the last move [Reply_T_last_move_X]: No time recorded yet Timeout occurred Time (-20 offset) [0.1s] 20 is 0,0s 21 is 0,1s 30 is 1,0s 620 is 60,0s Information not available (calibration error is reported)

5.1 SPOOL CALIBRATION

5.1.1 Spool calibration start request [SER_TOOL_REQ_X]

The J1939 proprietary A message transmitted in order to make PVED-CLS start the spool calibration process

Priority: 6
PGN: 61184 (0xEF00)
XID: 140 {Spool calib req}
Occurrence: When PVED-CLS reports readiness to start the spool calibration, i.e. the spool calibration trigger is armed by having the steering wheel activated for a moment
Sent by: Any node
Sent to: PVED-CLS MAIN micro-controller

Bytes	Encoding	Value/Range	Description
1	U8	140	extended message identifier [SER_TOOL_REQ_XID_X]
2	U8		Max. Wheel angle allowed during spool calibration [Req_WA_sweep_angle_X]:
		0	Reserved
		1..254	Wheel angle [0.1deg]
		255	Information not available
3, 4	U16		Initial spool set point [Req_Spl_init_SP_X]:
		0..1000	Absolute value of the spool position [10um]
		1001..65534	Reserved
		65535	Information not available
5	U8		Min. Time for moving the wheels in one direction [Req_Spl_calib_Tmin_X]:
		0	Reserved
		1..254	Time [0.1s]
		255	Information not available
6	U8		Max. Time for moving the wheels in one direction [Req_Spl_calib_Tmax_X]:
		0	Reserved
		1..254	Time [0.1s]
		255	Information not available
7..8	-	All 1	Reserved

Note:
1. Setting a parameter to all 1 – Information not available – will result in using an EEPROM parameter value instead.
2. The request will be ignored if found invalid, e.g. either reserved values have been provided or the max. time for moving wheel in one direction is found lower than the min. time.

5.1.2 Parameter Update Request [SER_TOOL_REQ_X]

See the message definition in section 5.3.3.

5.1.3 Calibration Reset Request [SER_TOOL_REQ_X]

See the message definition in section 5.3.4.

5.1.4 Calibration Status [SER_TOOL_REPLY_X]

See the message definition in section 5.3.5.

6 Soft Reset

6.1 SOFT RESET REQUEST [SER_TOOL_REQ_X]

The J1939 proprietary A message transmitted in order to make PVED-CLS perform a soft reset

Priority: 6
PGN: 61184 (0xEF00)
XID: 150 {Soft reset req}
Occurrence: When needed
Sent by: Any node
Sent to: PVED-CLS MAIN micro-controller

Bytes	Encoding	Value/Range	Description
1	U8	150	extended message identifier [SER_TOOL_REQ_XID_X]
2, 3	U16		Check value: 0xA5A5
4..8	-	All 1	Reserved

6.2 SOFT RESET REPLY [SER_TOOL_REPLY_X]

The J1939 proprietary A message transmitted as reply to the PVED-CLS soft reset request message

Priority: 6
PGN: 61184 (0xEF00)
XID: 151 {Soft reset reply}
Occurrence: Upon reception of a soft reset request message
Sent by: PVED-CLS MAIN micro-controller
Sent to: Sent to the node that has requested the soft reset

Bytes	Encoding	Value/Range	Description
1	U8	151	extended message identifier [SER_TOOL_REPLY _XID_X]
2..8	-	All 1	Reserved

7 Status messages

Not all signals are available in both microcontrollers. If a signal is not present, "Information not available" is reported instead.

7.1 STATUS MESSAGE REQUEST [SER_TOOL_REQ_X]

The J1939 proprietary A message which defines transmission periods of the status messages 1 – 6.

Priority: 6
PGN: 61184 (0xEF00)
XID: 132 {Stat msg req}
Occurrence: When needed
Sent by: Any node
Sent to: PVED-CLS MAIN or Safety micro-controller

Bytes	Encoding	Value/Range	Description
1	U8	132	extended message identifier [SER_TOOL_REQ_XID_X]
2	U8	 0 1..254 255	Transmission rate of the Operation status message [TX_Rate_stat_msg_OP_X]: No change Transmission period expressed as a number of 10ms ticks No change
3	U8	 0 1..254 255	Transmission rate of the status message 1 [TX_Rate_stat_msg_1_X]: Transmission stop Transmission period expressed as a number of 10ms ticks No change
4	U8	 0 1..254 255	Transmission rate of the status message 2 [TX_Rate_stat_msg_2_X]: Transmission stop Transmission period expressed as a number of 10ms ticks No change
5	U8	 0 1..254 255	Transmission rate of the status message 3 [TX_Rate_stat_msg_3_X]: Transmission stop Transmission period expressed as a number of 10ms ticks No change
6	U8	 0	Transmission rate of the status message 4 [TX_Rate_stat_msg_4_X]: Transmission stop

		1..254 255	Transmission period expressed as a number of 10ms ticks No change
7	U8	 0 1..254 255	Transmission rate of the status message 5 [TX_Rate_stat_msg_5_X]: Transmission stop Transmission period expressed as a number of 10ms ticks No change
8	U8	 0 1..254 255	Transmission rate of the status message 6 [TX_Rate_stat_msg_6_X]: Transmission stop Transmission period expressed as a number of 10ms ticks No change

7.2 STATUS MESSAGE REQUEST 2 [SER_TOOL_REQ_X]

The J1939 proprietary A message which defines transmission periods of the status message 7

Priority: 6
PGN: 61184 (0xEF00)
XID: 136 {Stat msg req 2}
Occurrence: When needed
Sent by: Any node
Sent to: PVED-CLS MAIN or Safety micro-controller

Bytes	Encoding	Value/Range	Description
1	U8	136	extended message identifier [SER_TOOL_REQ_XID_X]
2	U8	 0 1..254 255	Transmission rate of the status message 7 [TX_Rate_stat_msg_7_X]: Transmission stop Transmission period expressed as a number of 10ms ticks No change
3..8	-	All 1	Reserved

Default transmission rates to use after power-up are defined by parameters shown in Table 4.

Status message	Transmission rate parameter index
Operation status message	P3301
Status message 1	P3302
Status message 2	P3303
Status message 3	P3304
Status message 4	P3305
Status message 5	P3306
Status message 6	P3307
Status message 7	P3327

Table 4: Parameter list for default transmission rate of status messages

7.3 STATUS MESSAGE 1 [STAT_MSG_1_X]

Priority: 6
PGN: 65280 + P3312 (Default: 0xFF21)
Occurrence: Periodic – Transmission rate defined by P3302 or the Status message request message
Sent by: PVED-CLS MAIN or Safety micro-controller
Sent to: All nodes

Bytes	Encoding	Value/Range	Description
1..2	U16	0..2000 2001..65534 65535	Requested spool position [Spool_setpoint_X]: Valid spool position (-1000 offset) in [10um], where: 0 corresponds to the spool moved 10mm to the left, 1000 is the neutral position and 2000 corresponds to the spool moved 10mm to the right Reserved Information not available
3..4	U16	0..2000 2001..65534 65535	Actual spool position [Spool_position_X]: Valid spool position (-1000 offset) in [10um], where: 0 corresponds to the spool moved 10mm to the left, 1000 is the neutral position and 2000 corresponds to the spool moved 10mm to the right Reserved Information not available
5..6	U16	0..6000 6001..65534 65535	Data from the external analog input 1 [AD1_X]: Measured value at the external AD1 input in [mV] –See note 1. Reserved Information not available
7..8	U16	0..6000 6001..65534 65535	Data from the external analog input 2 [AD2_X]: Measured value at the external AD2 input in [mV] –See note 1. Reserved Information not available

Note 1: The readings are sensor supply voltage compensated if this is enabled for the transmitting micro-controller. Supply voltage compensation is controlled by P3246 for AD1 and P3247 for AD2.

7.4 STATUS MESSAGE 2 [STAT_MSG_2_X]

Priority: 6
PGN: 65280 + P3313 (Default: 0xFF22)
Occurrence: Periodic – Transmission rate defined by P3303 or the Status message request message
Sent by: PVED-CLS MAIN or Safety micro-controller
Sent to: All nodes

Bytes	Encoding	Value/Range	Description
1	Bits 8..7		Actual state of the Coils supply switch [State_CSS_X]:
		00	OFF
		01	ON
		10	Error condition
		11	Information not available
	Bits 6..5		Status of the Digital output [Dout_state_X]:
		00	Reserved
		01	In good condition
		10	Error condition
		11	Information not available
	Bits 4..3		Source of the closed loop wheel angle set-point [SRC_CL_WA_setpoint_X]:
		00	Reserved
		01	AUX
		10	Reserved
		11	GPS
	Bits 2..1	All 1	Reserved
2	-	All 1	Reserved
3..4	U16		Data from the external analog input 3 [AD3_X]:
		0..6000	Measured value at the external AD3 input in [mV]
		6001..65534	Reserved
		65535	Information not available
5..6	U16		Measured current sourced by the Digital output [Dout_current_X]:
		0..5000	Measured current [mA]
		5001..65534	Reserved
		65535	Information not available

7..8	U16	0..2000 2001..65534 65535	Wheel angle setpoint used in Closed loop algorithms [CL_WA_setpoint_X]: Valid wheel angle setpoint (-1000 offset) in [0.1%], where 0 corresponds to the left most position (-100,0%), 1000 is the neutral position and (0,0%) 2000 corresponds to the right most position (100,0%) Reserved Information not available

Note 1: If the actual steering mode is different than closed loop the Wheel angle setpoint is displayed as information not available.

7.5 STATUS MESSAGE 3 [STAT_MSG_3_X]

Priority: 6
PGN: 65280 + P3314 (Default: 0xFF23)
Occurrence: Periodic – Transmission rate defined by P3304 or the Status message request message
Sent by: PVED-CLS MAIN or Safety micro-controller
Sent to: All nodes

Bytes	Encoding	Value/Range	Description
1..2	U16	0..170 171..65534 65535	PCB temperature [PCB_temp_X]: PCB temperature (-40 offset) [degC] Reserved Information not available
3..4	U16	0..36000 36001..65534 65535	Battery voltage [Batt_volt_X]: Battery voltage [mV] Reserved Information not available
5..6	U16	0..6000 6001..65534 65535	Sensor supply voltage [Sensor5V_volt_X]: Sensor supply voltage [mV] Reserved Information not available
7	U8	0..255	Actual LVDT compensation value [LVDT_neut_comp_X]: LVDT offset compensation value (-100 offset) in [10um]
8	Bits 8..7	All 1	Reserved
	Bits 6..5	00 01 10 11	Spool control status [Spl_ctrl_status_X]: Spool is controlled actively Spool control released, ready for LVDT offset compensation Error condition Information not available

	Bits 4..1	0..15	LVDT offset compensation counter [LVDT_comp_count_X]: How many times has LVDT offset compensation been executed (counter rolls over if higher than 15)

7.6 STATUS MESSAGE 4 [STAT_MSG_4_X]

Priority: 6
PGN: 65280 + P3315 (Default: 0xFF24)
Occurrence: Periodic – Transmission rate defined by P3305 or the Status message request message
Sent by: PVED-CLS MAIN or Safety micro-controller
Sent to: All nodes

Bytes	Encoding	Value/Range	Description
1..2	U16	0..2000 2001..65534 65535	Flow Command [Flow_Cmd_X]: Valid Flow command (-1000 offset) in [0.1%], where: 0 corresponds to 100.0% Flow to the left, 1000 is the neutral position (0.0%) and 2000 corresponds to 100.0% Flow to the right Reserved Information not available
3..4	U16	0..65534 65535	Ideal oil volume sums the total desired oil volume per revolution before EFU, soft stop and ramps functionality is applied in STW/AUX algorithm [Ideal_oil_vol_X]: Ideal oil volume per revolution in [ccm] Information not available
5..6	U16	0..2000 2001..65534 65535	Flow setpoint describes the flow command before ramps & soft stop functionality is applied in STW/AUX algorithm [Flow_setpoint _X]: Valid Flow command (-1000 offset) in [0.1%], where: 0 corresponds to 100.0% Flow to the left, 1000 is the neutral position (0.0%) and 2000 corresponds to 100.0% Flow to the right Reserved Information not available
7..8	U16	0..3600 3601..65534 65535	Steering wheel position difference to ideal position in STW/AUX algorithm [EFU_STW_difference_X]: Steering wheel position difference in [0.1deg] Reserved Information not available

Note 1: If the corresponding algorithm is not executed, the signal value shall be displayed as "Information not available"

7.7 STATUS MESSAGE 5 [STAT_MSG_5_X]

Priority: 6
PGN: 65280 + P3316 (Default: 0xFF25)
Occurrence: Periodic – Transmission rate defined by P3306 or the Status message request message
Sent by: PVED-CLS MAIN or Safety micro-controller
Sent to: All nodes

Bytes	Encoding	Value/Range	Description
1	Bits 8..7		Fault detection algorithm – Steering wheel activation [FDA_STW_indication_X]:
		00	Left
		01	Neutral (No Steering wheel activation)
		10	Right
		11	Information not available
	Bits 6..5		Fault detection algorithm – Wheel angle change [FDA_WAS_indication_X]:
		00	Left
		01	Neutral (No change)
		10	Right
		11	Information not available
	Bits 4..3		Fault detection algorithm – Spool position [FDA_Spl_indication_X]:
		00	Left
		01	Neutral
		10	Right
		11	Information not available
	Bits 1..2		Fault detection algorithm – Error condition [FDA_Err_condition_X]:
		00	Inactive
		01	Active
		10	Reserved
		11	Information not available
2	Bits 8..3		Measured wheel angle LSB [WAS_X]:
		0..2000	See description in byte 3
	Bits 2..1		Fault Detection algorithm – Fault condition [FDA_Fault_condition_X]:
		00	Inactive
		01	Active
		10	Reserved
		11	Information not available
3	Bits 8..6		Actual Spool position LSB [FDA_Spool_position_X]:
		0..2000	See description in byte 4
	Bits 5..1		Measured Wheel angle MSB (AD1/CAN) [WAS_X]:

		0..2000 2001..2048	Valid wheel angle (-1000 offset) in [0.1%], where 0 corresponds to the left most position (-100,0%), 1000 is the neutral position and (0,0%) 2000 corresponds to the right most position (100,0%) Reserved
4	U8	0..2000 2001..2048	Actual Spool position MSB [FDA_Spool_position_X]: Valid spool position (-1000 offset) in [10um], where: 0 corresponds to the spool moved 10mm to the left, 1000 is the neutral position and 2000 corresponds to the spool moved 10mm to the right Reserved
5	U8	0..1024	Fault Detection Algorithm - Confidence counter value LSB [FDA_Confidence_counter_X]: Confidence counter in [10ms]
6	Bits 8..3	0..6000	Steering wheel angle velocity LSB [FDA_STW_velocity_X]: See description in byte 7
	Bits 2..1	0..1024	Fault Detection Algorithm - Confidence counter value MSB [FDA_Confidence_counter_X]: See description in byte 5
7	Bit 8	1	Reserved
	Bits 7..1	0..6000 6001..8192	Steering wheel angle velocity MSB [FDA_STW_velocity_X]: Steering wheel angle velocity in [0.1RPM] (-300RPM offset), where: 0 corresponds to 300.0 or more RPM counterclockwise, 1 corresponds to 299.9RPM counterclockwise, 3000 corresponds to 0RPM, 5999 corresponds to 299.9RPM clockwise, 6000 corresponds to 300 or more RPM clockwise, Reserved
8	Bits 8..7	00 01 10 11	Fault detection algorithm – Status bit [FDA_Muted_X]: Fault detection algorithm muted Fault detection algorithm enabled Reserved Information not available
	Bits 6..5	00	Spool Control Flag [Spl_Ctrl_x] Spool control disabled

		01 10 11	Spool control enabled Error condition Information not available
	Bits 4..3	 00 01 10 11	Spool Diagnostic Type [Spl_Diag_X] Spool monitoring active Spool Movement check active Parallel execution of Spool monitoring and Spool movement check active No Spool diagnostics active
	Bits 2..1	All 1	Reserved

7.8 STATUS MESSAGE 6 [STAT_MSG_6_X]

Priority: 6
PGN: 65280 + P3317 (Default: 0xFF26)
Occurrence: Periodic – Transmission rate defined by P3307 or the Status message request message
Sent by: PVED-CLS MAIN or Safety micro-controller
Sent to: All nodes

Bytes	Encoding	Value/Range	Description
1..2	U16	0..10000 10001..65534 65535	Average Micro-controller load – see note 1 [Avg_CPU_load_X]: Measured load in 0.01% Reserved Information not available
3..4	U16	0..2000 2001..65534 65535	Flow command received on the SPI link from other micro-controller [SPI_Flow_command_X]: Valid Flow command (-1000 offset) in [0.1%], where: 0 corresponds 100.0% Flow to the left, 1000 is the neutral position (0.0%) and 2000 corresponds to 100.0% Flow to the right Reserved Information not available
5..6	U16	0..2000 2001.. 65534 65535	Measured Wheel angle 2 (AD2) [WAS2_X]: Valid wheel angle (-1000 offset) in [0.1%], where 0 corresponds to the left most position (-100,0%), 1000 is the neutral position and (0,0%) 2000 corresponds to the right most position (100,0%) Reserved Information not available
7	U8	0..255	Calculated spool monitoring timeout [Spool_monitoring_timeout_X]: Spool monitoring timeout in [10ms]
8	U8	0..254 255	Actual spool monitoring timeout [Spool_monitoring_time_X]: Timeout in [10ms] Information not available

Note 1: The CPU load measurement is only available for Danfoss Power solutions technicians. In normal operation always "information not available" will be displayed.

7.9 STATUS MESSAGE 7 [STAT_MSG_7_X]

Priority: 6
PGN: 65280 + P3328 (Default: 0xFF27)
Occurrence: Periodic – Transmission rate defined by P3327 or the Status message request message 2
Sent by: PVED-CLS MAIN or Safety micro-controller
Sent to: All nodes

Bytes	Encoding	Value/Range	Description
1..2	U16	0..2000 2001.. 65534 65535	Measured Joystick Position 1 (AD1) [JOY1_X]: Valid Joystick position (-1000 offset) in [0.1%], where 0 corresponds to the left most position (-100,0%), 1000 is the neutral position and (0,0%) 2000 corresponds to the right most position (100,0%) Reserved Information not available
3..4	U16	0..2000 2001.. 65534 65535	Measured Joystick Position 2 (AD2) [JOY2_X]: Valid Joystick position (-1000 offset) in [0.1%], where 0 corresponds to the left most position (-100,0%), 1000 is the neutral position and (0,0%) 2000 corresponds to the right most position (100,0%) Reserved Information not available
5..6	U16	0..2000 2001.. 65534 65535	Joystick Flow Request [JOY_FLW_REQ_X]: Valid Joystick flow request (-1000 offset) in [0.1%], where 0 corresponds to the maximum flow to the left (-100,0%), 1000 is the neutral position and (0,0%) 2000 corresponds to maximum flow to the right (100,0%) Reserved Information not available
7..8	-	All 1	Reserved

7.10 OPERATION STATUS MESSAGE [STAT_MSG_OP_X]

Priority: 6
PGN: 65280 + P3311 (Default: 0xFF20)
Occurrence: Periodic – Transmission rate defined by P3301 or the Status message request message
Sent by: PVED-CLS MAIN or Safety micro-controller
Sent to: All nodes

Bytes	Encoding	Value/Range	Description
1	U8		Current Operation state [OperationState_X]:
		0x00	On-Road
		0x10	Off-Road Reaction
		0x11	Off-Road Non-reaction
		0x20	STW Program 1
		0x21	STW Program 2
		0x22	STW Program 3
		0x23	STW Program 4
		0x24	STW Program 5
		0x30	AUX Program 1
		0x31	AUX Program 2
		0x32	AUX Program 3
		0x33	AUX Program 4
		0x34	AUX Program 5
		0x40	GPS Steering
		0x41	GPS 2 Steering
		0xD0	Off-Road Safety-Check
		0xE0	Service mode – Direct Output Control
		0xE1	Service mode – Wheel angle sensor calibration
		0xE2	Service mode – Spool calibration
		0xE3	Service mode – Joystick calibration
		0xF0	Initialization
		0xFF	Safe State
2	Bits 8..7		Lock-out status for steering device changes [Lockout_device_change_X]:
		00	Steering device changes allowed
		01	Steering device changes prohibited
		10	Error condition
		11	Information not available
	Bits 6..5		Lock-out status for STW/AUX program changes [Lockout_program_change_X]:
		00	Program changes allowed
		01	Program changes prohibited
		10	Error condition
		11	Information not available

	Bits 4..3		Lock-out status for EH-steering functionality [Lockout_EH_steering_X]:
		00	EH-Steering functionality allowed
		01	EH-Steering functionality prohibited by an external switch
		10	Error condition
		11	Information not available
	Bits 2..1		AUX Steering device lockout status [Lockout_AUX_X]:
		00	AUX device steering allowed
		01	AUX device steering prohibited
		10	Error condition
		11	Information not available
3	Bits 8..7		GPS receiver selection and lockout status [Lockout_GPS_X]:
		00	No GPS receiver selected (GPS steering prohibited)
		01	GPS Steering selected
		10	GPS 2 Steering selected
		11	Reserved
	Bits 6..1	All 1	Reserved
4	U8		Service mode state [Service_mode_state_X]:
		0x00	Direct output control reset
		0x01	Direct output control / Direct output control active
		0x02..0x0F	Reserved
		0x10	WAS calibration Reset
		0x11	WAS calibration in progress
		0x12..0x1C	Reserved
		0x1D	WAS calibration counter update
		0x1E	WAS calibration failure
		0x1F	WAS calibration complete
		0x20	Spool calibration reset
		0x21	Spool calibration inactive
		0x22	Spool calibration getting armed
		0x23	Spool calibration armed
		0x24	Spool calibration in progress
		0x25	Spool parameters plausibility check
		0x26	Spool parameters ready to update
		0x27	Spool parameters update
		0x28..0x2C	Reserved
		0x2D	Spool calibration counter update
		0x2E	Spool calibration failure
		0x2F	Spool calibration complete
		0x30	Joystick calibration Reset
		0x31	Joystick calibration in progress

		0x32..0x3C 0x3D 0x3E 0x3F 0x40..0xFC 0xFD 0xFE 0xFF	Reserved Joystick calibration counter update Joystick calibration failure Joystick calibration complete Reserved No analog joystick configured No wheel angle sensor configured Information not available (Operation state other than service mode)
5	-	All 1	Reserved
6	Bits 8..5	All 1	Reserved
	Bits 4..1	0..15	Sequence number [OperationState_Seq_X]: Incremented by 1 in each Operation status message. Rolls over from 15 to 0
7..8	U16	0..65535	CRC16 for data bytes 1..6 [OperationState_CRC_X]: Polynomial: 0xC86C

8 Auto-guidance related CAN messages

8.1 GUIDANCE SYSTEM COMMAND [GPSX_GMC]

Priority: 3
PGN: 44288 (0xAD00)
Occurrence: Periodic – minimum every 100ms
Sent by: Auto-guidance controller / Auto-guidance 2 controller
Sent to: PVED-CLS Main controller

Bytes	Encoding	Value/Range	Description
1..2	U16	0..64255 64256..65535	Curvature command [GPSX_Curvature_cmd]: Curvature command in [0.25km^{-1}] (offset -8032km^{-1}) 0 corresponds to -8032 km^{-1} (Max left) 32128 corresponds to 0 km^{-1}(Straight) 64255 corresponds to 8031.75 km^{-1}(Max right) Information not available
3	Bits 8..3	All 1	Reserved
	Bits 2..1	00 01 10 11	Steering command status [GPSX_Str_cmd_status]: Not intended for steering Intended for steering Error condition Information not available
4..8	-	All 1	Reserved

8.2 GUIDANCE MACHINE STATUS [GPSX_GMS]

Priority: 3
PGN: 44032 (0xAC00)
Occurrence: Periodic – Transmission rate defined by P3309
Sent by: PVED-CLS Main controller
Sent to: Auto-guidance controller / Auto-guidance 2 controller

Bytes	Encoding	Value/Range	Description
1..2	U16		Estimated curvature [GPSX_ Estimated _curvature]:
		0..64255	Curvature command in [0.25km^{-1}] (offset -8032km^{-1}) 0 corresponds to -8032 km^{-1} (Max left) 32128 corresponds to 0 km^{-1}(Straight) 64255 corresponds to 8031.75 km^{-1}(Max right)
		64256..65535	Information not available
3	Bits 8..7		Request reset command status [GPSX_Req_reset]:
		00	Reset not required
		01	Reset required
		10	Error condition
		11	Information not available
	Bits 6..5		Steering input position status [GPSX_Str_input_pos_status]:
		00	Incorrect position
		01	Correct position
		10	Error condition
		11	Information not available
	Bits 4..3		Steering system readiness [GPSX_System_ready]:
		00	System is not ready
		01	System is ready
		10	Error condition
		11	Information not available
	Bits 2..1		Mechanical system lockout [GPSX_System_lockout]:
		00	Not active
		01	Active
		10	Error condition
		11	Information not available

4	Bits 8..6		Guidance limit status [GPSX_Limit_status]: see note 1
		0	Not limited
		1	Reserved
		2	Limited high (only lower command values result in a change)
		3	Limited low (only higher command values result in a change)
		4..5	Reserved
		6	Non-recoverable fault
		7	Reserved
	Bits 5..1	All 1	Reserved
5	Bits 8..7	All 1	Reserved
	Bits 6..1		Guidance exit reason [GPSX_Exit_reason]: see note 1
		0	No reason/all clear
		1..2	Reserved
		3	Operator override of function
		4	Reserved
		5	GMC timeout
		6	GMC out of range/invalid
		7..23	Reserved
		24	Vehicle speed too high
		25	Alternate guidance or no system active
		26..61	Reserved
		62	Error (Safe state)
		63	Reserved
6..8	-	All 1	Reserved

Note 1: PVED-CLS supports the guidance machine status message specified in ISO 11783-7:2015, but can also support ISO 11783-7:2009. The message layout is controlled by parameter P3326. If P3326 is set to 255, PVED-CLS will send the guidance machine status message will support ISO 11783-7:2015 and if P3326 is set to 0, the Guidance limit status and the Guidance exit reason signals will be sent with all ones.

8.3 GUIDANCE STATE MACHINE

The guidance state machine ensures that the selected auto-guidance controller follows the agreed protocol and to provide the auto-guidance controller with the required status information. State transitions are triggered by information from:

- The selected auto-guidance controllers
- MMI controller
- Steering wheel sensor
- AUX device

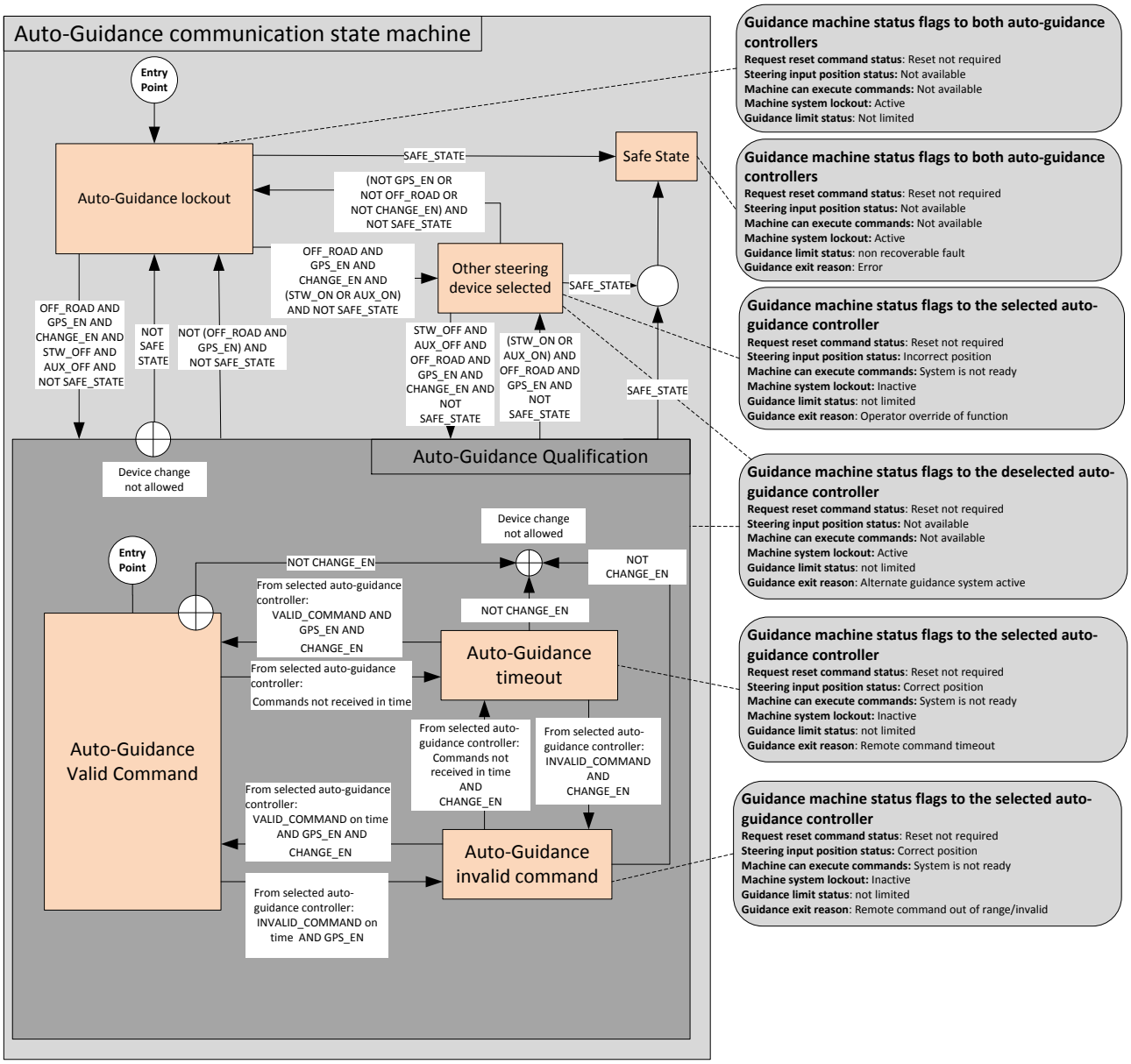

Figure 1: Auto-Guidance state machine-Main

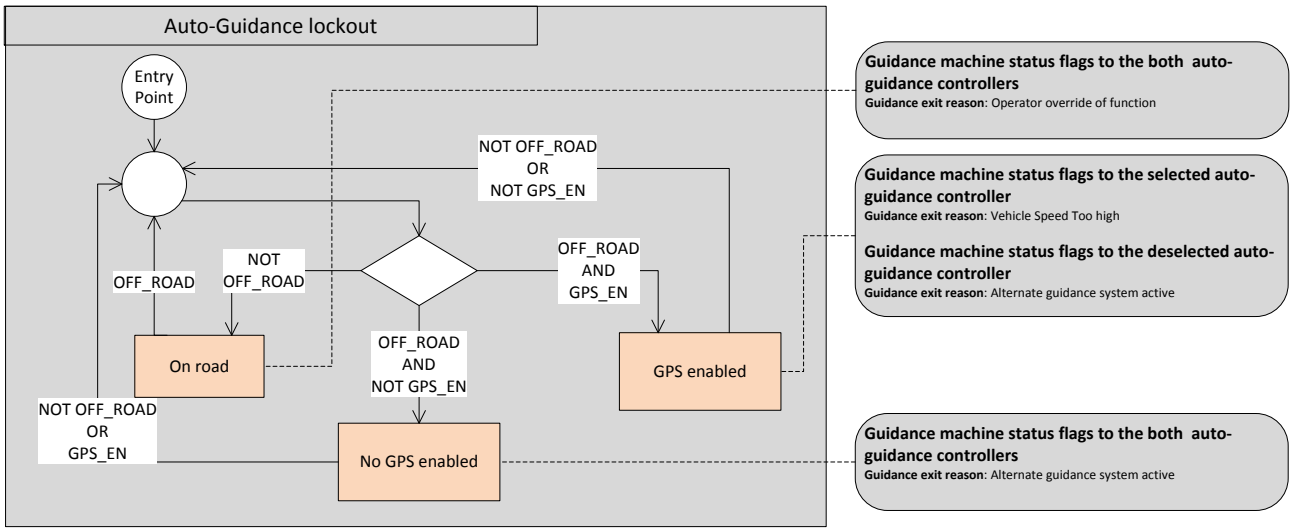

Figure 2: Auto-Guidance state machine- Lockout

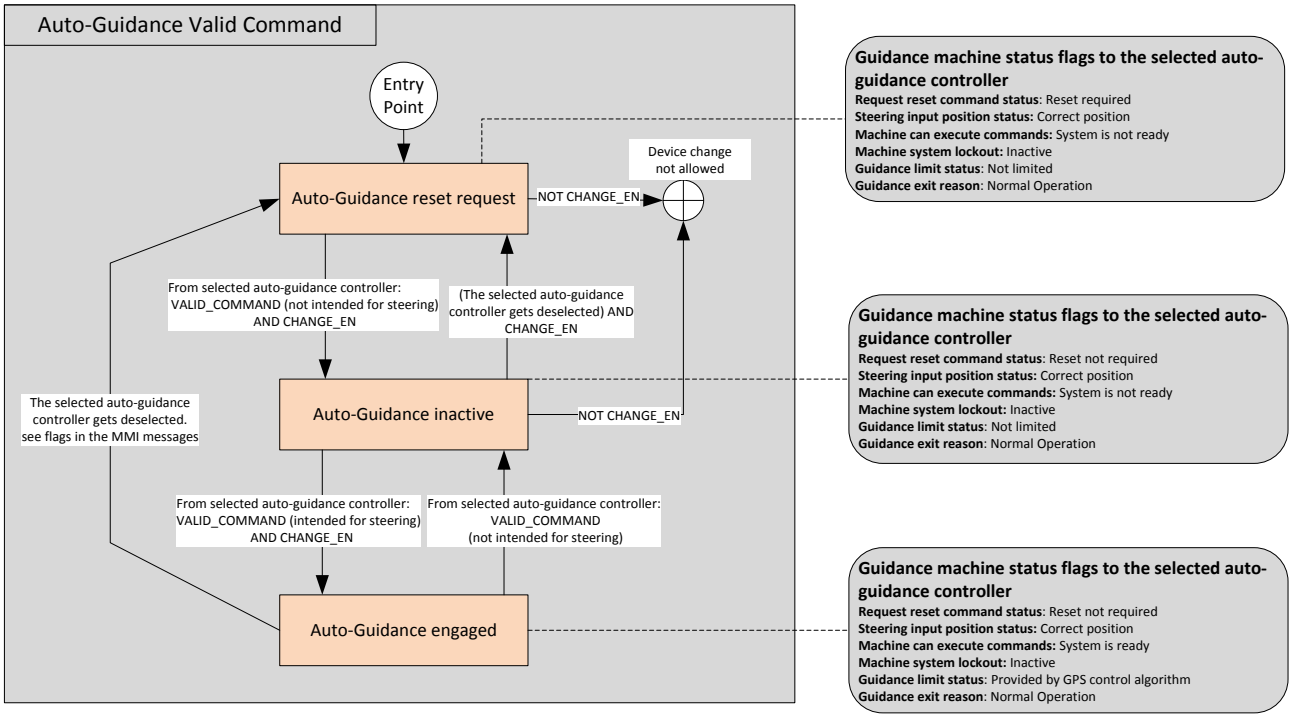

Figure 3: Auto-Guidance state machine- Valid Command

Condition for		**Description**
Steering wheel		
	STW_ON	The steering wheel is in use – the steering angle velocity is greater than parameter P3471.
	STW_OFF	The steering wheel is not in use – the steering angle velocity is lower than parameter P3471.
AUX steering device		
	AUX_ON	The AUX steering device is present in the system - parameter P3239 is set to TRUE

		and the AUX steering device is enabled (see flags in the MMI messages section 11) and • the AUX steering device is a steering wheel – parameter P3240 is set to AUX_SteeringWheel – and its steering angle velocity is greater than or equal to parameter P3646 or • the AUX steering device is an open loop joystick – parameter P3240 is set to AUX_OpenLoopJoystick – and the AUX reset has been done i.e. the requested flow has been observed lower than parameter P3647 – and the requested flow is greater than or equal to parameter P3647 or • the AUX steering device is a closed loop joystick – parameter P3240 is set to AUX_ClosedLoopJoystick – and the Enable flag available in the AUX message is active (see section 13.2).
	AUX_OFF	The AUX steering device is not present in the system – parameter P3239 is set to FALSE or the AUX steering device is disabled(see flags in the MMI messages section 11) or the AUX steering device is a steering wheel – parameter P3240 is set to AUX_SteeringWheel – and its steering angle velocity is lower than parameter P3646 or the AUX steering device is an open loop joystick – parameter P3240 is set to AUX_OpenLoopJoystick – and the requested flow is lower than parameter P3647 or the AUX steering device is a closed loop joystick – parameter P3240 is set to AUX_ClosedLoopJoystick – and the absolute value of the auxiliary steering device related closed loop error is lower than specified by P3730 [IR] for at least the time specified by P3731 [10ms] and the Enable flag available in the AUX message is inactive (see section 13.2).
Guidance controller(s)		
	GPS_EN	An auto-guidance controller is present – parameter P3237 or P3238, respectively, is set to TRUE – and enabled – see flags in the MMI messages.

		Auto-guidance commands availability: The auto-guidance commands are available when received one after another with a break in between shorter than the value specified by parameter P3289.
	VALID_COMMAND	Steering command status as “Not Intended for Steering” or “Intended for steering” of Guidance System Command
	INVALID_COMMAND	Steering command status as “Error condition” or “Information not available” of Guidance System Command
Other conditions		
	OFF_ROAD	The system is in the Normal Operation state and in the Off-road steering mode.
	CHANGE_EN	The steering device change is allowed – the absolute value of the vehicle speed is lower than or equal to parameter P3250.
	SAFE_STATE	PVED-CLS has entered the Safe State.

Note 1: Guidance machine status is only sent to auto-guidance controllers if they are present in the system, i.e. P3237 and/or P3238 are set to TRUE (255), respectively.

Note 2: The estimated curvature in the guidance machine status message is transmitted in normal operation mode and in the safe state where the estimated curvature will be reported as “information not available”.

9 Steering wheel messages

9.1 STW PRIMARY MESSAGE [STW_P]

Priority: 3
PGN: 65280 + P3319 (Default: 0xFF10)
Occurrence: Periodic – every 50ms
Sent by: Steering wheel sensor
Sent to: All CAN nodes

Bytes	Encoding	Value/Range	Description
1..2	U16	0..4095 4096..65534 65535	Steering angle 1 relative to the 0-index point [STW_pos_P]: Steering angle in [$\frac{360}{4096}$ degree] steps, where: 0 corresponds to 0 degrees, 4095 corresponds to 359.912 degrees **Note:** the steering angle rolls over from 4095 to 0 for clockwise activation and from 0 to 4095 for counterclockwise activation Information not available Sensor failure
3..4	U16	0..40960 40961..65534 65535	Steering angle velocity [STW_velocity_P]: Steering angle velocity (offset -20480) in [$\frac{300}{20480}$RPM] steps, where 0 corresponds to -300RPM (300RPM counterclockwise) 20480 corresponds to 0RPM 40960 corresponds to 300RPM (300RPM clockwise) Information not available Sensor failure
5	-	All 1	Reserved
6	Bits 8..5	 0 1 2 3 4 5 6 7..13 14 15	Error code [STW_error_code_P]: Reserved Sensor chip error Steering angle failure CAN input message failure Power failure CPU failure Memory failure Reserved Temperature warning No Error
	Bits 4..1	 0..15	Sequence number [STW_Seq_P], incremented by 1 in each STW primary message Rolls over from 15 to 0
7..8	U16		CRC16 for data bytes 1..6 [STW_CRC_P]:

		0..65535	Polynomial: 0xC86C

9.2 STW REDUNDANT MESSAGE [STW_R]

Priority: 3
PGN: 65280 + P3319 (Default: 0xFF11)
Occurrence: Periodic – every 50ms
Sent by: Steering wheel sensor
Sent to: All CAN nodes

Bytes	Encoding	Value/Range	Description
1..2	U16	0..4095 4096..65534 65535	Steering angle 2 relative to the 0-index point, with 180 degree offset [STW_pos_R]:: Steering angle in [$\frac{360}{4096}$ degree] steps, where: 0 corresponds to 180 degrees, 4095 corresponds to 179.912 degrees **Note:** the steering angle rolls over from 4095 to 0 for clockwise activation and from 0 to 4095 for counterclockwise activation Information not available Sensor failure
3..4	U16	0..40960 40961..65534 65535	Steering angle velocity [STW_velocity_R]: Steering angle velocity (offset -20480) in [$\frac{300}{20480}$RPM] steps, where 0 corresponds to -300RPM (300RPM counterclockwise) 20480 corresponds to 0RPM 40960 corresponds to 300RPM (300RPM clockwise) Information not available Sensor failure
5	-	All 1	Reserved
6	Bits 8..5	0 1 2 3 4 5 6 7..13 14 15	Error code [STW_error_code_R]: Reserved Sensor chip error Steering angle failure CAN input message failure Power failure CPU failure Memory failure Reserved Temperature warning No Error
	Bits 4..1	0..15	Sequence number [STW_seq_R], incremented by 1 in each STW primary message Rolls over from 15 to 0
7..8	U16	0..65535	CRC16 for data bytes 1..6 [STW_CRC_R]: Polynomial: 0xC86C

10 Vehicle speed messages

10.1 VSP PRIMARY MESSAGE [VSP_P]

Priority: 3
PGN: 65280 + P3318 (Default: 0xFF40)
Occurrence: Periodic – every 100ms
Sent by: Vehicle speed sensor
Sent to: All CAN nodes

Bytes	Encoding	Value/Range	Description
1	U8	All 1	Reserved
2	Bits 8..7	 00 01 10 11	Direction indication [VSP_Dir_P]: Forward Reverse Error condition Information not available
	Bits 6..1	All 1	Reserved
3..4	U16	 0..64255 64256..65535	Vehicle speed [VSP_Speed_P]: Measured vehicle speed in [1/256 KMPH] Information not available
5	-	All 1	Reserved
6	Bits 8..5	All 1	Reserved
	Bits 4..1	 0..15	Sequence number [VSP_Seq_P], incremented by 1 in each VSP primary message Rolls over from 15 to 0
7..8	U16	 0..65535	CRC16 for data bytes 1..6 [VSP_CRC_P]: Polynomial: 0xC86C

10.2 VSP REDUNDANT MESSAGE [VSP_R]

Priority: 3
PGN: 65280+ P3318 (Default: 0xFF41)
Occurrence: Periodic – every 100ms
Sent by: Vehicle speed sensor
Sent to: All CAN nodes

Bytes	Encoding	Value/Range	Description
1	U8	All 1	Reserved
2	Bits 8..7	 00 01 10 11	Direction indication [VSP_Dir_R]: Forward Reverse Error condition Information not available
	Bits 6..1	All 1	Reserved
3..4	U16	 0..64255 64256..65535	Vehicle speed [VSP_Speed_R]: Measured vehicle speed in [1/256 KMPH] Information not available
5	-	All 1	Reserved
6	Bits 8..5	All 1	Reserved
	Bits 4..1	 0..15	Sequence number [VSP_Seq_R], incremented by 1 in each VSP primary message Rolls over from 15 to 0
7..8	U16	 0..65535	CRC16 for data bytes 1..6 [VSP_CRC_R]: Polynomial: 0xC86C

11 MMI messages

MMI messages can be configured to be Proprietary A or B. The message format is set by P3324.
If configured to proprietary A format (default), the message layout is:
CAN ID: 0x0CEF <DA_P3297> <SA_P3295>
If configured to proprietary B format, the message layout is:
CAN ID: 0x0CFF <PGN_offset_P3325> <SA_P3295>

11.1 MMI PRIMARY MESSAGE [MMI_P]

Priority: 3
PGN: If configured as proprietary A: 61184 (0xEF00)
If configured as proprietary B: 65280 + P3325 (default: 0xFF42)
Occurrence: Periodic – every 500ms
Sent by: MMI controller
Sent to: PVED-CLS Main controller

Bytes	Encoding	Value/Range	Description
1	U8	0 All 1	**If configured as proprietary A:** Extended messages identifier [MMI_XID_P] **If configured as proprietary B:** Reserved
2	U8	 0x00 0x10 0x11 0x20 0x21 0x22 0x23 0x24	Steering mode request [MMI_Str_mode_req_P]: On-Road Off-Road Reaction Off-Road Non-Reaction STW Program 1 STW Program 2 STW Program 3 STW Program 4 STW Program 5
3	Bits 8..7	 00 01 10 11	Auto-guidance receiver selection and lockout [MMI_Lockout_GPS_P]: No GPS receiver selected (GPS steering prohibited) GPS Steering selected GPS 2 Steering selected Reserved
	Bits 6..5	 00 01 10 11	AUX steering device lockout [MMI_Lockout_AUX_P]: AUX steering allowed AUX steering prohibited Reserved Information not available
	Bits 4..1	All 1	Reserved
4	U8		AUX program request [MMI_AUX_mode_req_P]:

		0x30 0x31 0x32 0x33 0x34	AUX Program 1 AUX Program 2 AUX Program 3 AUX Program 4 AUX Program 5
5	-	All 1	Reserved
6	Bits 8..5	All 1	Reserved
	Bits 4..1	0..15	Sequence number [MMI_Seq_P], incremented by 1 in each MMI primary message Rolls over from 15 to 0
7..8	U16	0..65535	CRC16 for data bytes 1..6 [MMI_CRC_P]: Polynomial: 0xC86C

Note 1: If the AUX device is a joystick, PVED-CLS will treat all AUX program requests as AUX program 1.
Note 2: The auto-guidance receiver selection and lockout signal has no function in 1.93 and earlier software versions.

11.2 MMI REDUNDANT MESSAGE [MMI_R]

Priority: 3
PGN: If configured as proprietary A: 61184 (0xEF00)
If configured as proprietary B: 65280 + P3325 (default: 0xFF43)
Occurrence: Periodic – every 500ms
Sent by: MMI controller
Sent to: PVED-CLS Safety controller

Bytes	Encoding	Value/Range	Description
1	U8	2 All 1	**If configured as proprietary A:** Extended messages identifier [MMI_XID_R] **If configured as proprietary B:** Reserved
2	U8	0x00 0x10 0x11 0x20 0x21 0x22 0x23 0x24	Steering mode request [MMI_Str_mode_req_R]: On-Road Off-Road Reaction Off-Road Non-Reaction STW Program 1 STW Program 2 STW Program 3 STW Program 4 STW Program 5
3	Bits 8..7	00 01 10 11	GPS receiver selection and lockout [MMI_Lockout_GPS_R]: No GPS receiver selected (GPS steering prohibited) GPS Steering selected GPS 2 Steering selected Reserved

	Bits 6..5	00 01 10 11	AUX steering device lockout [MMI_Lockout_AUX_R]: AUX steering allowed AUX steering prohibited Reserved Information not available
	Bits 4..1	All 1	Reserved
4	U8	0x30 0x31 0x32 0x33 0x34	AUX program request [MMI_AUX_mode_req_R]: AUX Program 1 AUX Program 2 AUX Program 3 AUX Program 4 AUX Program 5
5	-	All 1	Reserved
6	Bits 8..5	All 1	Reserved
	Bits 4..1	0..15	Sequence number [MMI_Seq_R], incremented by 1 in each MMI redundant message Rolls over from 15 to 0
7..8	U16	0..65535	CRC16 for data bytes 1..6 [MMI_CRC_R]: Polynomial: 0xC86C

Note 1: If the AUX device is a joystick, PVED-CLS will treat all AUX program requests as AUX program 1.
Note 2: The GPS receiver selection and lockout signal has no function in 1.93 and earlier software versions.

12 Wheel angle sensor messages

12.1 WAS PRIMARY MESSAGE [WAS_P]

Priority: 3
PGN: 65280 + P3320 (Default: 0xFF12)
Occurrence: Periodic – every 50ms
Sent by: Wheel angle sensor
Sent to: All CAN nodes

Bytes	Encoding	Value/Range	Description
1	U8	All 1	Reserved
2..3	U16	0..99 100..4900 4901..5000 5001..65535	Wheel angle signal 1 WAS_WA_P: Error Condition Valid wheel angle signal to scale according to P3185, P3187 & P3189 Error Condition Reserved
4..5	-	All 1	Reserved
6	Bits 8..5	All 1	Reserved
	Bits 4..1	0..15	Sequence number [WAS_Seq_P], incremented by 1 in each WAS primary message Rolls over from 15 to 0
7..8	U16	0..65535	CRC16 for data bytes 1..6 [WAS_CRC_P]: Polynomial: 0xC86C

12.2 WAS REDUNDANT MESSAGE [WAS_R]

Priority: 3
PGN: 65280 + P3320 (Default: 0xFF13)
Occurrence: Periodic – every 50ms
Sent by: Wheel angle sensor
Sent to: All CAN nodes

Bytes	Encoding	Value/Range	Description
1	U8	All 1	Reserved
2..3	U16		Wheel angle signal 2 [WAS_WA_R]:
		0..99	Error Condition
		100..4900	Valid wheel angle signal to scale according to P3185, P3187 & P3189
		4901..5000	Error Condition
		5001..65535	Reserved
4..5	-	All 1	Reserved
6	Bits 8..5	All 1	Reserved
	Bits 4..1		Sequence number [WAS_Seq_R], incremented by 1 in each WAS redundant message
		0..15	Rolls over from 15 to 0
7..8	U16		CRC16 for data bytes 1..6 [WAS_CRC_R]:
		0..65535	Polynomial: 0xC86C

13 AUX sensor messages

13.1 AUX SENSOR AS A MINI WHEEL

13.1.1 AUX Primary message [AUX_STW_P]

Priority: 3
PGN: 65280 + P3321 (Default: 0xFF14)
Occurrence: Periodic – every 50ms
Sent by: AUX steering sensor
Sent to: All CAN nodes

Bytes	Encoding	Value/Range	Description
1..2	U16	0..4095 4096..65535	Steering angle 1 relative to the 0-index point [AUX_STW_pos_P]: Steering angle in [$\frac{360}{4096}$ degree] steps, where: 0 corresponds to 0 degrees, 4095 corresponds to 359.912 degrees **Note:** the steering angle rolls over from 4095 to 0 for clockwise activation and from 0 to 4095 for counterclockwise activation Information not available
3..4	U16	0..40960 40961..65535	Steering angle velocity [AUX_STW_velocity_P]: Steering angle velocity (offset -20480) in [$\frac{300}{20480}$RPM] steps, where 0 corresponds to -300RPM (300RPM counterclockwise) 20480 corresponds to 0RPM 40960 corresponds to 300RPM (300RPM clockwise) Information not available
5	-	All 1	Reserved
6	Bits 8..5	0 1 2 3 4 5 6 7 8..13 14 15	Error code [AUX_STW_error_code_P]: Reserved Sensor chip error Steering angle failure CAN input message failure Power failure CPU failure Memory failure Force feedback failure Reserved Temperature warning No Error
	Bits 4..1		Sequence number [AUX_STW_Seq_P], incremented by 1 in each AUX primary

		0..15	message Rolls over from 15 to 0
7..8	U16	0..65535	CRC16 for data bytes 1..6 [AUX_STW_CRC_P]: Polynomial: 0xC86C

13.1.2 AUX Redundant message [AUX_STW_R]

Priority: 3
PGN: 65280 + P3321 (Default: 0xFF15)
Occurrence: Periodic – every 50ms
Sent by: AUX steering sensor
Sent to: All CAN nodes

Bytes	Encoding	Value/Range	Description
1..2	U16	0..4095 4096..65535	Steering angle 2 relative to the 0-index point, with 180 degree offset [AUX_STW_pos_R]: Steering angle in [$\frac{360}{4096}$ degree] steps, where: 0 corresponds to 180 degrees, 4095 corresponds to 179.912 degrees **Note:** the steering angle rolls over from 4095 to 0 for clockwise activation and from 0 to 4095 for counterclockwise activation Information not available
3..4	U16	0..40960 40961..65535	Steering angle velocity [AUX_STW_velocity_R]: Steering angle velocity (offset -20480) in [$\frac{300}{20480}$RPM] steps, where 0 corresponds to -300RPM (300RPM counterclockwise) 20480 corresponds to 0RPM 40960 corresponds to 300RPM (300RPM clockwise) Information not available
5	-	All 1	Reserved
6	Bits 8..5	0 1 2 3 4 5 6 7 8..13 14 15	Error code [AUX_STW_error_code_R]: Reserved Sensor chip error Steering angle failure CAN input message failure Power failure CPU failure Memory failure Force feedback failure Reserved Temperature warning No Error
	Bits 4..1	0..15	Sequence number [AUX_STW_Seq_R], incremented by 1 in each AUX redundant message Rolls over from 15 to 0
7..8	U16		CRC16 for data bytes 1..6 [AUX_STW_CRC_R]:

		0..65535	Polynomial: 0xC86C

13.2 AUX SENSOR AS A JOYSTICK

13.2.1 AUX Primary message [AUX_JOY_P]

Priority: 3
PGN: 65280 + P3322 (Default: 0xFF16)
Occurrence: Periodic – every 50ms
Sent by: AUX steering sensor
Sent to: All CAN nodes

Bytes	Encoding	Value/Range	Description
1..2	U16	0..2000 2001..65535	Joystick position [AUX_JOY_POS_P]: Valid joystick position (-1000 offset) in [0.1%], where: 0 indicates to the leftmost position 1000 is the neutral position (0.0%) and 2000 indicates the rightmost position Information not available
3..4	U16	0..400 401..65535	Joystick neutral position trim [AUX_JOY_CL_trim_P]: (only for closed loop joystick) Valid joystick position trim (-200 offset) in [0.1 %], where: 0 indicates the neutral position moved 20% to the left 200 indicates the neutral position not moved 400 indicates the neutral position moved 20% to the right Information not available
5	Bits 8..3	All 1	Reserved
	Bits 2..1	00 01 10 11	Joystick Enable signal [AUX_JOY_CL_enable_P]:(only for closed loop joystick) Inactive Active Reserved Information not available
6	Bits 8..5	0..14 15	Error code [AUX_JOY_CL_error_code_P]: (only for closed loop joystick) Reserved No error
	Bits 4..1	0..15	Sequence number [AUX_JOY_Seq_P], incremented by 1 in each AUX primary message Rolls over from 15 to 0
7..8	U16	0..65535	CRC16 for data bytes 1..6 [AUX_JOY_CRC_P]: Polynomial: 0xC86C

13.2.2AUX Redundant message [AUX_JOY_R]

Priority: 3
PGN: 65280 + P3322 (Default: 0xFF17)
Occurrence: Periodic – every 50ms
Sent by: AUX steering sensor
Sent to: All CAN nodes

Bytes	Encoding	Value/Range	Description
1..2	U16	0..2000 2001..65535	Joystick position [AUX_JOY_POS_R]: Valid joystick position (-1000 offset) in [0.1%], where: 0 indicates to the leftmost position 1000 is the neutral position (0.0%) and 2000 indicates the rightmost position Information not available
3..4	U16	0..400 401..65535	Joystick neutral position trim [AUX_JOY_CL_trim_R]: (only for closed loop joystick) Valid joystick position trim (-200 offset) in [0.1 %], where: 0 indicates the neutral position moved 20% to the left 200 indicates the neutral position not moved 400 indicates the neutral position moved 20% to the right Information not available
5	Bits 8..3	All 1	Reserved
	Bits 2..1	00 01 10 11	Joystick Enable signal [AUX_JOY_CL_enable_R]: (only for closed loop joystick) Inactive Active Reserved Information not available
6	Bits 8..5	0..14 15	Error code [AUX_JOY_CL_error_code_R]: (only for closed loop joystick) Reserved No error
	Bits 4..1	0..15	Sequence number [AUX_JOY_Seq_R], incremented by 1 in each AUX redundant message Rolls over from 15 to 0
7..8	U16	0..65535	CRC16 for data bytes 1..6 [AUX_JOY_CRC_P]: Polynomial: 0xC86C

Note 1: Signals which are marked as (only for closed loop joystick) will not be validated if the joystick is configured as an open loop device (set all bits to 1 for signals not in use).
Note 2: Prior to software version 1.96, only open loop joystick functionality is available.

13.3 ELOBAU JOYSTICK

13.3.1 Primary Elobau message [ELOBAU_P]

Priority: 3
PGN: 0xFDD6 .. 0xFDD9
Occurrence: Periodic – every 15ms
Sent by: Elobau joystick
Sent to: All CAN nodes

Bytes	Encoding	Value/Range	Description
1	Bit 8..7	0..1000	X-Axis Position (Bit 2..1) [ELOBAU_POS_P]: See description in byte 2
	Bit 6..5	00 01 10 11	X-Axis Right Position Status [ELOBAU_RIGHT_P]: Not In Position In Position Error Indicator Not Available
	Bit 4..3	00 01 10 11	X-Axis Left Position Status [ELOBAU_LEFT_P]: Not In Position In Position Error Indicator Not Available
	Bit 2..1	00 01 10 11	X-Axis Neutral Position Status [ELOBAU_NEUTRAL_P]: Not In Position In Position Error Indicator Not Available
2	Bit 8..1	0..1000 1001..1021 1022 1023	X-Axis Position (Bit 10..3) [ELOBAU_POS_P]: Joystick position in [0.1 %], where 1000 corresponds to the outermost position Reserved Error indicator Not available
3 – 8	U8		Information not used by PVED-CLS

13.3.2 Redundant Elobau message [ELOBAU_R]

Priority: 3
PGN: 0xFDD6 .. 0xFDD9
Occurrence: Periodic – every 15ms
Sent by: Elobau joystick
Sent to: All CAN nodes

Bytes	Encoding	Value/Range	Description
1	Bit 8..7	0 .. 1000	X-Axis Position (Bit 2..1) [ELOBAU_POS_R]: See description in byte 2
	Bit 6..5	00 01 10 11	X-Axis Right Position Status [ELOBAU_RIGHT_R]: Not In Position In Position Error Indicator Not Available
	Bit 4..3	00 01 10 11	X-Axis Left Position Status [ELOBAU_LEFT_R]: Not In Position In Position Error Indicator Not Available
	Bit 2..1	00 01 10 11	X-Axis Neutral Position Status [ELOBAU_NEUTRAL_R]: Not In Position In Position Error Indicator Not Available
2	Bit 8..1	0 .. 1000 1001 .. 1021 1022 1023	X-Axis Position (Bit 10..3) [ELOBAU_POS_R]: Joystick position in [0.1 %], where 1000 corresponds to the outermost position Reserved Error indicator Not available
3 – 8	U8		Information not used by PVED-CLS

Note 1: All information are related to the official Elobau document named Operating/Safety Manual for J4F with 351JCM and tagged 11-0271 900643 BA J4F mit

351JCM v01.04.docx.
Note 2: The Elobau joystick is only intended for open loop steering.
Note 3: Two types of Elobau joysticks exists, one for right hand steering and one for left hand steering. Each type of Elobau joystick has two micro controllers, the primary micro controller is named Main controller and the redundant controller is named Supervisor controller. CAN messages send by the Supervisor controller are bitwise inverted.
Note 4: The steering intended information may, by the Elobau joystick, be send in the Basic Joystick Message (BJM) or Extended Joystick Message (EJM) depending on the joystick configuration. Whether the steering intended information is expected from the BJM or EJM in the PVED-CLS setup using the PGN.
Note 5: The PVED-CLS will check that all 8 data bytes have been received, but will only perform checks and handle data byte 1 and 2.
Note 6: For further information about the Elobau joystick please refer to the document named Operating/Safety Manual for J4F with 351JCM and tagged 11-0271 900643 BA J4F mit 351JCM v01.04.docx.

14 Steering feedback message [STR_FB_MSG_X]

Priority: 3
PGN: 65280 + P3323 (Default: 0xFF18)
Occurrence: Periodic – Transmission rate defined by P3308
Sent by: PVED-CLS Main and safety controller
Sent to: All CAN nodes

Bytes	Encoding	Value/Range	Description
1..2	U16	0..2000 2001..65535	Estimated EH-Flow [STR_FB_Est_flow_X]: Flow (-1000 offset) in [0.1%], where: 0 corresponds to 100.0% Flow to the left, 1000 is the neutral position (0.0%) and 2000 corresponds to 100.0% Flow to the right Information not available
3..4	U16	0..2000 2001..65535	Estimated Wheel angle [STR_FB_Est_WA_X]: Wheel angle (-1000 offset) in [0.1%], where 0 corresponds to the left most position (-100,0%), 1000 is the neutral position and (0,0%) 2000 corresponds to the right most position (100,0%) Information not available
5	U8	0 1..80 81..254 255	Number of desired steering wheel revolutions lock to lock [STR_FB_STW_L2L_X]: Reserved Steering revolutions in [0.1 Rev], where 1 corresponds to 0.1 steering wheel revolutions lock to lock 80 corresponds to 8 steering wheel revolutions lock to lock Reserved Information not available
6	Bits 8..5	All 1	Reserved
	Bits 4..1	0..15	Sequence number [STR_FB_Seq_X], incremented by 1 in each Steering feedback message Rolls over from 15 to 0
7..8	U16	0..65535	CRC16 for data bytes 1..6 [STR_FB_CRC_X]: Polynomial: 0xC86C

15 Parameter read related messages

15.1 PARAMETER READ REQUEST [SER_TOOL_REQ_X]

Priority: 6
PGN: 61184 (0xEF00)
XID: 134 {Param read req}
Occurrence: When needed
Sent by: Any CAN node
Sent to: PVED-CLS Main or Safety controller

Bytes	Encoding	Value/Range	Description
1	U8	134	Extended message identifier [SER_TOOL_REQ_XID_X]
2	U8	 0 1..4 5..255	Length of the data to read [Req_param_data_length_X]: Reserved No of bytes Reserved
3..4	U16	 0..16383 16384..65535	Data address [Req_param_address_X]: Parameter address in the EEPROM Reserved
5..8	-	All 1	Reserved

Note 1: Apply little-endian encoding of 'data address' in byte 3 and 4.
Note 2: PVED-CLS will also accept the message if only bytes 1–4 (DLC = 4) are sent.

15.2 PARAMETER READ REPLY [SER_TOOL_REPLY_X]

Priority: 6
PGN: 61184 (0xEF00)
XID: 135 {Param read reply}
Occurrence: Transmitted as reply to a parameter read request message
Sent by: PVED-CLS Main or Safety controller
Sent to: The node which the Parameter read request was received from

Bytes	Encoding	Value/Range	Description
1	U8	135	Extended message identifier [SER_TOOL_REPLY _XID_X]
2	U8	 0 1..4 5..255	Data length [Reply_param_data_length_X]: Reserved No of bytes read Reserved
3..4	U16	 0..16383 16384..65535	Data address [Reply_param_address_X]: Parameter address in the EEPROM Reserved
5	U8	 0..255 255	Low word LSB [Reply_param_value_ns_X]: Data byte available at the address of (data address), when the data length is in the range from 1 to 4 Data not available when the data length is set to 0
6	U8	 0..255 255	Low word MSB [Reply_param_value_ns_X]: Data byte available at the address of (data address + 1), when the data length is in the range from 2 to 4 Data not available when the data length is lower than 2
7	U8	 0..255 255	High word LSB [Reply_param_value_ns_X]: Data byte available at the address of (data address + 2), when the data length is set to either 3 or 4 Data not available when the data length is lower than 3
8	U8	 0..255 255	High word MSB [Reply_param_value_ns_X]: Data byte available at the address of (data address + 3), when the data length is set to 4 Data not available when the data length is lower than 4

Note 1: ns in "Reply_param_value_ns_X" correspond to the number if bytes transmitted from CLS (Data length). It also indicates if the representation in CANalyzer is signed or unsigned. Both signed and unsigned are shown in the trace window simultaneously. Possible replacements for ns: 1U, 2U, 3U, 4U, 1S, 2S, 3S, 4S
Note 2: Apply little-endian encoding of 'data address' in byte 3 and 4.

16 J1939-73 Diagnostics

PVED-CLS supports the diagnostic services listed 16.1, 16.3, 16.4, 16.6 & 16.7.

16.1 DM1 – ACTIVE DIAGNOSTIC TROUBLE CODES [DM1_X]

DM1 single frame or BAM is transmitted periodically every 1 second as well as event-based i.e. on occurrence or disappearance of faults.

Priority: 6
PGN: 65226 (0xFECA)
Occurrence: Periodic – every 1 sec, or if the content changes
Sent by: PVED-CLS Main and Safety controller
Sent to: All CAN nodes

Bytes	Encoding	Value/Range	Description
1	U8	0x00 0x04 0x10	Malfunction indicator lamp status: No active failure Amber warning lamp status (for warning and info errors) Red stop lamp status (for critical and severe errors)
2	U8	All 1	Flash status
3	U8	0..255	Suspect Parameter Number (SPN) LSB: SPN LSB
4	U8	0..255	Suspect Parameter Number (SPN) Second byte: SPN second byte
5	Bits 8..6	0..7	Suspect Parameter Number (SPN) MSB: SPN MSB
	Bits 5..1	0..31	Failure mode identifier (FMI): FMI
6	Bit 8	0..1	Conversion method
	Bits 7..1	0..127	DTC occurrence count Counter value
7..8	-	All 1	Reserved

PVED-CLS controller	Main	Safety
Node-ID	0x13	0x5A
DM1 Msg-ID	0x18FECA13	0x18FECA5A

Table 5: DM1 message ID's

16.2 REQUEST PGN [REQ_PGN_X]

PVED-CLS supports request PGN for DM2, DM3, Component ID, Software ID and claimed address

Priority: 6
PGN: 59904 (0xEA00)
Occurrence: On Request
Sent by: Any node or global request
Sent to: PVED-CLS Main and Safety controller

Bytes	Encoding	Value/Range	Description
1	U8	0..255	Requested PGN MSB:
2	U8	0..255	Requested PGN LSB:
3	U8	All 0	Reserved

16.3 DM2 – PREVIOUSLY ACTIVE DIAGNOSTIC TROUBLE CODES [DM2_X]

Priority: 6
PGN: 65227 (0xFECB)
Occurrence: Periodic – every 1 sec, on request
Sent by: PVED-CLS main and safety controller
Sent to: All CAN nodes

Bytes	Encoding	Value/Range	Description
1	U8	0x00 0x04 0x10	Malfunction indicator lamp status: No active failure Amber warning lamp status (for warning and info errors) Red stop lamp status (for critical and severe errors)
2	U8	All 1	Flash status
3	U8	0..255	Suspect Parameter Number (SPN) LSB: SPN LSB
4	U8	0..255	Suspect Parameter Number (SPN) Second byte: SPN second byte
5	Bits 8..6	0..7	Suspect Parameter Number (SPN) MSB: SPN MSB
	Bits 5..1	0..31	Failure mode identifier (FMI): FMI
6	Bit 8	0..1	Conversion method
	Bits 7..1	0..127	DTC occurrence count Counter value
7..8	-	All 1	Reserved

Example:
The Previously active diagnostic trouble codes from PVED-CLS main (0x13) and safety controller (0x5A) is globally requested as shown in Table 6:

Message ID	DLC	Byte 1	Byte 2	Byte 3
0x18EA13FF	3	0xCB	0xFE	0x00
0x18EA5AFF	3	0xCB	0xFE	0x00

Table 6: Requesting DM2

16.4 DM3 – DIAGNOSTIC DATA CLEAR/RESET OF PREVIOUSLY ACTIVE DIAGNOSTIC TROUBLE CODES [DM3_X]

On issuing a request PGN for DM3, PVED-CLS resets the error counters – information to zero and erases the error history in EEPROM. Present error status will remain unchanged.

PGN: 65228 (0xFECC)
Occurrence: On Request
Sent by: Any node or global request
Sent to: PVED-CLS Main and Safety controller

See request PGN message format in section 16.2.

Note:

- Upon a successful clearing of the error history, the PVED-CLS will issue a positive acknowledgement.
- If a DM3 operation is already pursuing in the PVED-CLS and a new request for DM3 is received, then the PVED-CLS will send out a busy acknowledgement.

Example:
PVED-CLS main and safety controller source address are 0x13 and 0x5A respectively. Requesting node source address is 0xFF in the below example

Message ID	DLC	Byte 1	Byte 2	Byte 3
0x18EA13FF	3	0xCC	0xFE	0x00
0x18EA5AFF	3	0xCC	0xFE	0x00

Table 7: Requesting DM3

16.5 ACKNOWLEDGEMENT (J1939-21) [J1939_ACK_X]

Priority: 6
PGN: 59392 (0xE800)
Occurrence: On request
Sent by: PVED-CLS main and safety controller
Sent to: All nodes

Bytes	Encoding	Value/Range	Description
1	U8	 0x00 0x01 0x02	Control byte [Control byte]: Positive ACK Negative ACK Access denied (DM3 in progress)
2	-	All 0	Reserved
3..4	-	All 1	Reserved
5	U8	0x05 0xFF	Address positive ACK Reserved
6..7	U16	0..65535	Requested PGN
8	-	All 0	Reserved

Example 1:

After successful clearing the error history in the PVED-CLS main controller, the PVED-CLS will send out a positive acknowledgement.

Message ID	DLC	Byte 1	Byte 2	Byte 3	Byte 4	Byte 5	Byte 6	Byte 7	Byte 8
0x18E8FF13	8	0x00	0x00	0xFF	0xFF	0x05	0xCC	0xFE	0x00
0x18E8FF5A	8	0x00	0x00	0xFF	0xFF	0x05	0xCC	0xFE	0x00

Example 2:

If a DM3 operation is in progress and a new request for DM3 is received, then the PVED-CLS will send out the busy acknowledgement as follows.

Message ID	DLC	Byte 1	Byte 2	Byte 3	Byte 4	Byte 5	Byte 6	Byte 7	Byte 8
0x18E8FF13	8	0x02	0x00	0xFF	0xFF	0x05	0xCC	0xFE	0x00
0x18E8FF5A	8	0x02	0x00	0xFF	0xFF	0x05	0xCC	0xFE	0x00

16.6 COMPONENT ID [J1939_COMP_ID_X]

On issuing a request PGN for component ID, PVED-CLS will respond with the model number and the serial number with the format given below.

PGN: 65228 (0xFEEB)
Occurrence: On Request
Sent by: Any node or global request
Sent to: PVED-CLS Main and Safety controller

See request PGN message format in section 16.2.

PVED-CLS will report its model number (fx. 11108681) and serial number (fx. A1201171420035) through a BAM session.

BAM control message

Priority: 7
PGN: 60416 (0xEC00)
Sent by: PVED-CLS main and safety controller
Sent to: All nodes

Bytes	Encoding	Value	Description
1	U8	0x20	BAM Control byte
2..3	U16	0x26	Number of bytes in this session
4	U8	0x06	Number of packets in this session
5	U8	0xFF	Reserved
6..8	U24	0x00FEEB	Requested PGN (Component ID)

Data message 1:

Priority: 7
PGN: 60160 (0xEB00)
Sent by: PVED-CLS main and safety controller
Sent to: All nodes

Bytes	Encoding	Value	Description
1	U8	0x01	BAM Sequence number
2	ASCII	0x2A	Delimiter (“*”)
3..8	ASCII	-	First 6 bytes of model number in ASCII encoding

Data message 2:

Priority: 7
PGN: 60160 (0xEB00)
Sent by: PVED-CLS main and safety controller
Sent to: All nodes

Bytes	Encoding	Value	Description
1	U8	0x02	BAM Sequence number
2..3	ASCII	-	Last 2 bytes of model number in ASCII encoding
4	ASCII	0x2A	Delimiter ("*")
5..8	ASCII	-	Bytes 1 – 4 of serial number in ASCII encoding

Data message 3:

Priority: 7
PGN: 60160 (0xEB00)
Sent by: PVED-CLS main and safety controller
Sent to: All nodes

Bytes	Encoding	Value	Description
1	U8	0x03	BAM Sequence number
2..8	ASCII	-	Bytes 5 – 11 of serial number in ASCII encoding

Data message 4:

Priority: 7
PGN: 60160 (0xEB00)
Sent by: PVED-CLS main and safety controller
Sent to: All nodes

Bytes	Encoding	Value	Description
1	U8	0x04	BAM Sequence number
2..6	ASCII	-	Bytes 12 – 16 of serial number in ASCII encoding
7..8	-	All 0	Reserved

Data message 5:

Priority: 7
PGN: 60160 (0xEB00)
Sent by: PVED-CLS main and safety controller
Sent to: All nodes

Bytes	Encoding	Value	Description
1	U8	0x05	BAM Sequence number
2..8	-	All 0	Reserved

Data message 6:

Priority: 7
PGN: 60160 (0xEB00)
Sent by: PVED-CLS main and safety controller
Sent to: All nodes

Bytes	Encoding	Value	Description
1	U8	0x06	BAM Sequence number
2	-	All 0	Reserved
3	ASCII	0x2A	Delimiter ("*")
4	ASCII	0x2A	Delimiter ("*")
5..8	-	All 1	Reserved

If PVED-CLS is busy processing a component ID request (or other PGN request) while a new request is issued, PVED-CLS will send a busy acknowledgement message.

Busy acknowledgement message

Priority: 6
PGN: 60160 (0xE800)
Sent by: PVED-CLS main and safety controller
Sent to: All nodes

Bytes	Encoding	Value	Description
1	U8	0x02	BAM busy
2	-	All 0	Reserved
3..4	-	All 1	Reserved
5	U8	0x05	Address busy Ack
6..8	U24	0x00FEEB	Requested PGN (Component ID)

16.7 SOFTWARE ID [J1939_SW_ID_X]

On issuing a request PGN for Software ID, PVED-CLS will respond with the boot loader software ID and the application software ID with the format given below

PGN: 65242 (0xFEDA)
Occurrence: On Request
Sent by: Any node or global request
Sent to: PVED-CLS Main and Safety controller

See request PGN message format in section 16.2.

PVED-CLS will report its boot loader ID (fx. BOOT_CLS-_M_R382_KWP2000-_11153472_A-rr_151214) and application ID (fx. APP-_CLS-_M_P192_SEHS----_11153340_-rrr_111214) through a BAM session.

BAM control message

Priority: 7
PGN: 60416 (0xEC00)
Sent by: PVED-CLS main and safety controller
Sent to: All nodes

Bytes	Encoding	Value	Description
1	U8	0x20	BAM Control byte
2..3	U16	0x59	Number of bytes in this session
4	U8	0x0D	Number of packets in this session
5	U8	0xFF	Reserved
6..8	U24	0x00FEDA	Requested PGN (Software ID)

Data message 1:

Priority: 7
PGN: 60160 (0xEB00)
Sent by: PVED-CLS main and safety controller
Sent to: All nodes

Bytes	Encoding	Value	Description
1	U8	0x01	BAM Sequence number
2	U8	0x02	Number of Software fields
3..8	ASCII	-	First 6 bytes of Boot loader ID in ASCII encoding

Data message 2:

Priority: 7
PGN: 60160 (0xEB00)
Sent by: PVED-CLS main and safety controller
Sent to: All nodes

Bytes	Encoding	Value	Description
1	U8	0x02	BAM Sequence number
2..8	ASCII	-	Bytes 7 – 13 of boot loader ID in ASCII encoding

Data message 3:

Priority: 7
PGN: 60160 (0xEB00)
Sent by: PVED-CLS main and safety controller
Sent to: All nodes

Bytes	Encoding	Value	Description
1	U8	0x03	BAM Sequence number
2..8	ASCII	-	Bytes 14 – 20 of boot loader ID in ASCII encoding

Data message 4:

Priority: 7
PGN: 60160 (0xEB00)
Sent by: PVED-CLS main and safety controller
Sent to: All nodes

Bytes	Encoding	Value	Description
1	U8	0x04	BAM Sequence number
2..8	ASCII	-	Bytes 21 – 27 of boot loader ID in ASCII encoding

Data message 5:

Priority: 7
PGN: 60160 (0xEB00)
Sent by: PVED-CLS main and safety controller
Sent to: All nodes

Bytes	Encoding	Value	Description
1	U8	0x05	BAM Sequence number
2..8	ASCII	-	Bytes 28 – 34 of boot loader ID in ASCII encoding

Data message 6:

Priority: 7
PGN: 60160 (0xEB00)
Sent by: PVED-CLS main and safety controller
Sent to: All nodes

Bytes	Encoding	Value	Description
1	U8	0x06	BAM Sequence number
2..7	ASCII	-	Bytes 35 – 40 of boot loader ID in ASCII encoding
8	U8	-	Build date (day)

Data message 7:

Priority: 7
PGN: 60160 (0xEB00)
Sent by: PVED-CLS main and safety controller
Sent to: All nodes

Bytes	Encoding	Value	Description
1	U8	0x07	BAM Sequence number
2	U8	-	Build date (month)
3	U8	-	Build date (year)
4	ASCII	0x2A	Delimiter ("*")
5..8	ASCII	-	First 4 bytes of application ID in ASCII encoding

Data message 8:

Priority: 7
PGN: 60160 (0xEB00)
Sent by: PVED-CLS main and safety controller
Sent to: All nodes

Bytes	Encoding	Value	Description
1	U8	0x08	BAM Sequence number
2..8	ASCII	-	Bytes 5 – 11 of application ID in ASCII encoding

Data message 9:

Priority: 7
PGN: 60160 (0xEB00)
Sent by: PVED-CLS main and safety controller
Sent to: All nodes

Bytes	Encoding	Value	Description
1	U8	0x09	BAM Sequence number
2..8	ASCII	-	Bytes 12 – 18 of application ID in ASCII encoding

Data message 10:

Priority: 7
PGN: 60160 (0xEB00)
Sent by: PVED-CLS main and safety controller
Sent to: All nodes

Bytes	Encoding	Value	Description
1	U8	0x0A	BAM Sequence number
2..8	ASCII	-	Bytes 19 – 25 of application ID in ASCII encoding

Data message 11:

Priority: 7
PGN: 60160 (0xEB00)
Sent by: PVED-CLS main and safety controller
Sent to: All nodes

Bytes	Encoding	Value	Description
1	U8	0x0B	BAM Sequence number
2..8	ASCII	-	Bytes 26 – 32 of application ID in ASCII encoding

Data message 12:

Priority: 7
PGN: 60160 (0xEB00)
Sent by: PVED-CLS main and safety controller
Sent to: All nodes

Bytes	Encoding	Value	Description
1	U8	0x0C	BAM Sequence number
2..8	ASCII	-	Bytes 33 – 39 of application ID in ASCII encoding

Data message 13:

Priority: 7
PGN: 60160 (0xEB00)
Sent by: PVED-CLS main and safety controller
Sent to: All nodes

Bytes	Encoding	Value	Description
1	U8	0x0D	BAM Sequence number
2	ASCII	-	Byte 40 of application ID in ASCII encoding
3	U8	-	Build date (day)
4	U8	-	Build date (month)
5	U8	-	Build date (year)
6	ASCII	0x2A	Delimiter ("*")
7..8	-	All 1	Reserved

If PVED-CLS is busy processing a software ID request (or other PGN request) while a new request is issued, PVED-CLS will send a busy acknowledgement message.

Busy acknowledgement message

Priority: 6
PGN: 60160 (0xE800)
Sent by: PVED-CLS main and safety controller
Sent to: All nodes

Bytes	Encoding	Value	Description
1	U8	0x02	BAM busy
2	-	All 0	Reserved
3..4	-	All 1	Reserved
5	U8	0x05	Address busy Ack
6..8	U24	0x00FEDA	Requested PGN (Software ID)