Technical Report

of the

Type testing

of the

PVED-CLS

Proportional Valve

Electrical actuator Digital circuit

Closed Loop System

Manufacturer
Danfoss Power Solutions ApS
Nordborgvej 81
DK-6430, Denmark

Report No.: DN87130T
Revision 2.0 dated 2021-11-18

Test and Certification Body

TÜV SÜD Rail GmbH
Rail Automation
D-80339 Munich

This technical report may be represented only in complete wording. The use for promotion needs written permission. It contains the result of a unique investigation of the product being tested and places no generally valid judgment about characteristics out of the running fabrication. Official translations of this technical report are to be authorized by the test and certification agency.

Classified as Business

Table of Contents

REVISION 4

COVERED VERSIONS 5

1 TARGET OF EVALUATION (TOE) 6

2 SCOPE OF TESTING 7

2.1 TEST SPECIMEN 7
2.1.1 Proportional OSPE/ EHi-E Valve with PVED-CLS controller 7
2.1.2 Proportional EHPS Valve with PVED-CLS controller 8
2.1.3 Proportional EHi-H Valve with PVED-CLS controller 8
2.1.4 Safety system configuration PVED-CLS 10
2.2 TESTS 11

3 BASIS OF TESTING 12

3.1 EUROPEAN DIRECTIVES 12
3.2 PRODUCT STANDARD 12
3.3 FUNCTIONAL SAFETY 13
3.4 ELECTRICAL SAFETY 13
3.5 SUSCEPTIBILITY TO ENVIRONMENTAL ERRORS 13
3.5.1 IP Code testing 13
3.6 ELECTROMAGNETIC COMPATIBILITY 14
3.6.1 Immunity tests - Conducted interferences 14
3.6.2 Immunity tests - Radiated interferences 14
3.6.3 Emission tests 15
3.6.4 Electrostatic discharge immunity tests 15
3.7 ENVIRONMENTAL TESTING 15
3.7.1 Temperature 15
3.7.2 Mechanical vibration and shock 15
3.7.3 IP Testing 16
3.8 SAFETY INFORMATION IN THE PRODUCT DOCUMENTATION (SAFETY MANUAL, OPERATING INSTRUCTIONS) 16

4 DOCUMENTS PROVIDED FOR TESTING 16

5 PERFORMANCE AND RESULT OF TESTS 24

5.1 TEST REPORTS 24
5.2 FUNCTIONAL SAFETY MANAGEMENT AND LIFECYCLE AUDIT 26
5.3 SYSTEM FAILURE MODE AND EFFECTS ANALYSIS (SYSTEM-FMEA) 27
5.4 FAILURE MODE EFFECT AND DIAGNOSIS ANALYSIS (FMEDA) AND HARDWARE FAULT SIMULATIONS (FIT) 27
5.5 TESTING OF FAULT AVOIDANCE MEASURES 28
5.6 QUANTITATIVE ANALYSIS 28
5.7 SOFTWARE EVALUATION 29
5.7.1 Analysis of the Software 29
5.7.2 Software tests 30
5.8 ELECTRICAL SAFETY 30
5.9 CLIMATIC STRESS-TESTS 30
5.10 MECHANICAL STRESS-TESTS 30
5.11 TESTING OF THE NOISE IMMUNITY 31
5.12 TESTING OF THE NOISE EMISSION 31
5.13 VERIFICATION OF THE DEGREE OF PROTECTION 31
5.14 INSPECTION OF THE TECHNICAL DOCUMENTATION 31

6 SUMMARY 31

Tables

Table 1: Revision 4
Table 2: Covered Versions 5
Table 3: European directives 12
Table 4: Product standard 13
Table 5: Functional safety 13
Table 6: Electrical safety 13
Table 7: IP Code testing 13
Table 8: Electromagnetic immunity 14
Table 9: Electromagnetic Immunity 14
Table 10: Electromagnetic Emission 15
Table 11: Electromagnetic Immunity 15
Table 12: Temperature testing 15
Table 13: Mechanical vibration and shock testing 15
Table 14: IP Testing 16
Table 15: Safety information 16
Table 16: Documents provided for Testing 23
Table 17: Test reports 26

Revision

Version	Status	Date	Author	Changed chapters	Reason of change
0.1	draft	2015-06-26	Henke/ Luther	-	initial
0.2	draft	2015-07-17	Luther	all	Meeting at Danfoss in Nordborg
1.0	final	2015-07-29	Henke/ Luther	all	Update of listed documents and reports Update the links to the related chapters
1.1	final	2015-07-29	Henke/ Luther	all	Update of listed reports Update the links to the related chapters
1.2	final	2016-09-19	Henke/ Luther	1; 3.3; 3.8; 4; 5	Changes of the SW release 1.95 Update of listed documents and reports
1.3	final	2016-11-11	Henke/ Luther	1; 3.3; 3.8; 4; 5	Changes of the SW release 1.96 Update of listed documents and reports
1.4	final	2017-09-26	Henke/ Luther	1; 4; 5	Changes of the SW release 1.97, 1.98 Update of listed documents and reports
1.5	final	2018-08-30	Henke/ Luther	1; 4; 5	Changes of the SW release 2.00 Update of listed documents and reports
1.6	final	2019-02-05	Henke/ Luther	1; 2.1; 2.1.1; 2.1.3; 4; 5	Changes of the SW release 2.01 Add. New EHi Valve Update of standards and regulation Update of listed documents and reports
1.7	final	2019-10-15	Henke/ Luther	1; 4; 5	Changes of the SW release 2.02 Update of listed documents and reports
1.8	final	2019-10-17	Luther	3.3; 5.1; 5.7	Update of SIL for the SW-Development
1.9	final	2020-08-27	Henke/ Luther	1; 2.1.3; 4; 5	Changes of the SW release 2.02 to add NAXIS 1.00 multi axis steering option
2.0	final	2021-11-18	Henke/ Luther	1; 2.1.3; 4; 5	Changes of the SW release NAXIS 1.00 to NAXIS 1.01

Table 1: Revision

Covered Versions

Typ	HW rev.	SW rev.	Remark
PVED-CLS	V	1.92	
PVED-CLS	V	1.93	
PVED-CLS	V	1.95	
PVED-CLS	V	1.96	
PVED-CLS	V	1.97	
PVED-CLS	V	1.98	
PVED-CLS	V	2.00	
PVED-CLS	V	2.01	
PVED-CLS	V	2.02	
PVED-CLS	V	1.00	(NAXIS)
PVED-CLS	V	1.01	(NAXIS)

For more details, see Annex A of the Technical Report on the Certificate Z10 16 08 47358 003, DN87130T_A_A in the last valid revision.

Table 2: Covered Versions

1 Target of Evaluation (ToE)

In August 2011 the company Danfoss Power Solutions ApS assigned TÜV SÜD for testing and certifying the Proportional Valve PVED-CLS according to IEC 61508 2nd Edition SIL 2 and ISO 25119/ ISO 13849 AgPL/PL d, Cat. 3.

In July 2016 the company Danfoss Power Solutions ApS assigned TÜV SÜD for updating the existing certificate to the new revision of ISO 13849-1 and certifying the changes for the software release 1.95. The results are documented in the reports /R40/ and /R41/.

In October 2016 the company Danfoss Power Solutions ApS assigned TÜV SÜD for updating the certification according the changes for the software release 1.96. The results are documented in the report /R42/.

In June 2017 the company Danfoss Power Solutions ApS assigned TÜV SÜD for updating the certification according the changes for the software release 1.97 and 1.98. The results are documented in the report /R43/.

In April 2018 the company Danfoss Power Solutions ApS assigned TÜV SÜD for updating the certification according the changes for the software release 2.00.
The results are documented in the report /R44/.

In June 2018 the company Danfoss Power Solutions ApS assigned TÜV SÜD for updating the certification according the changes for the software release 2.01 and adding the new EHi valve.
The results are documented in the report /R44/ and /R45/.

In August 2019 the company Danfoss Power Solutions ApS assigned TÜV SÜD for updating the certification according the changes for the software release 2.02.
The results are documented in the report /R46/.

In August 2019 the company Danfoss Power Solutions ApS assigned TÜV SÜD for updating the certification according the changes for the software release 1.00 (NAXIS) and adding the new N-Axis option. The results are documented in the report /R48/.

In June 2021 the company Danfoss Power Solutions ApS assigned TÜV SÜD for updating the certification according the changes for the software release 1.01 (NAXIS)
The results are documented in the report /R53/

2 Scope of Testing

2.1 Test specimen

The Danfoss Digital Proportional Steering Valve Controller PVED-CLS is a controller for safe electro-hydraulic steering. CLS is an abbreviation for Closed Loop System.
The PVED-CLS is intended for electro-hydraulic steering products for the off-road market where a documented extended safety is needed. The extended safety is obtained by using a high degree of redundant safety monitoring and reaction.

There are 2 safe states defined for PVED-CLS connected to an OSPE/ EHi valve:

- EH main spool in neutral position' is achieved by electrically ***de-energizing the solenoid valve bridge (SVB)*** via SVB power switch.
- The 'Cut-off spool in blocked position' is achieved by electrically ***de-energizing the solenoid valve (SV)*** via SV power switch

There is 1 safe state defined for PVED-CLS connected to an EHPS valve:

- Safe EHPS main spool control is achieved by electrically ***de-energizing the solenoid valve bridge (SVB)***via SVB power switch (which is also known as coils supply switch). The PVED-CLS pilot pressures are now shut-off and the spool chambers are pressurized by the OSP-CX. Now the OSP-CX supplies the pilot pressure and controls the main spool and therefore the steering cylinder.

2.1.1 Proportional OSPE/ EHi-E Valve with PVED-CLS controller

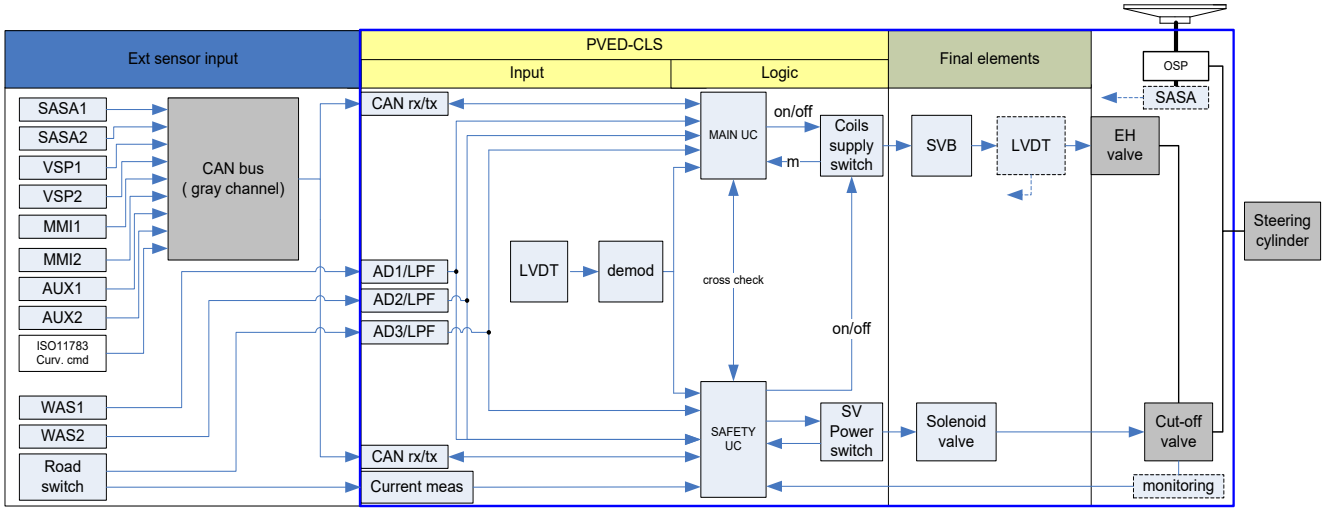

The OSPE/ EHi-E valve is the valve unit with integrated hydrostatic steering unit (OSP), EH valve (directional valve) and cut-off valve.
The EH main spool is closed-loop position-controlled by the PVED-CLS (software and hardware). The EH main spool is stroked by controlling the solenoid valve bridge. Electrically de-energizing the solenoid valve bridge or the cut-off valve, relieves the pilot pressure to tank and the neutral spring pushes the EH main spool to neutral (blocked/safe state).
The LVDT measures the EH spool position which is used by the PVED-CLS software for position control.
For details on OSPE/ EHi-E please see /D6/ and /D96/.

2.1.2 Proportional EHPS Valve with PVED-CLS controller

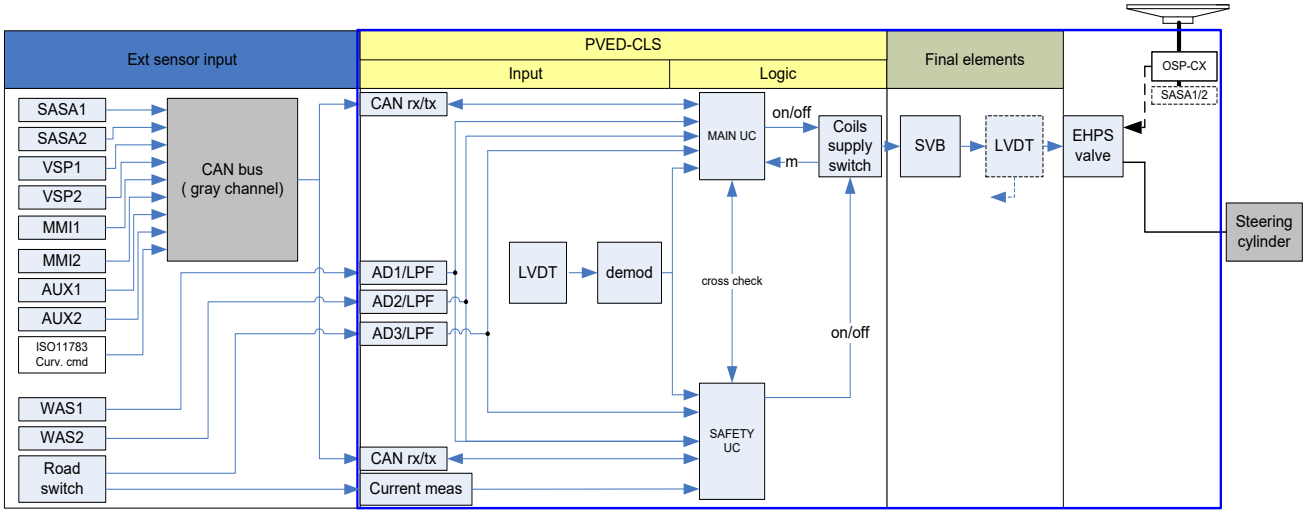

The EHPS valve is a proportional flow valve with a single spool which controls high-pressure flows to the steering cylinder. The valve has dual control pilot pressure inputs for piloting the main spool.
The EHPS main spool is positioned in neutral by a neutral positioning spring. The main spool begins to deflect at a 5 bar pilot pressure (typical). Two pilot pressure sources can pressurize the main spool chambers: LE and RE pressure signals from the PVED-CLS solenoid valve bridge (SVB), and L and R pilot flows from the OSP-CX building up pressure signals through variable grooves in the main spool.

For details on EHPS please see /D7/.

2.1.3 Proportional EHi-H Valve with PVED-CLS controller

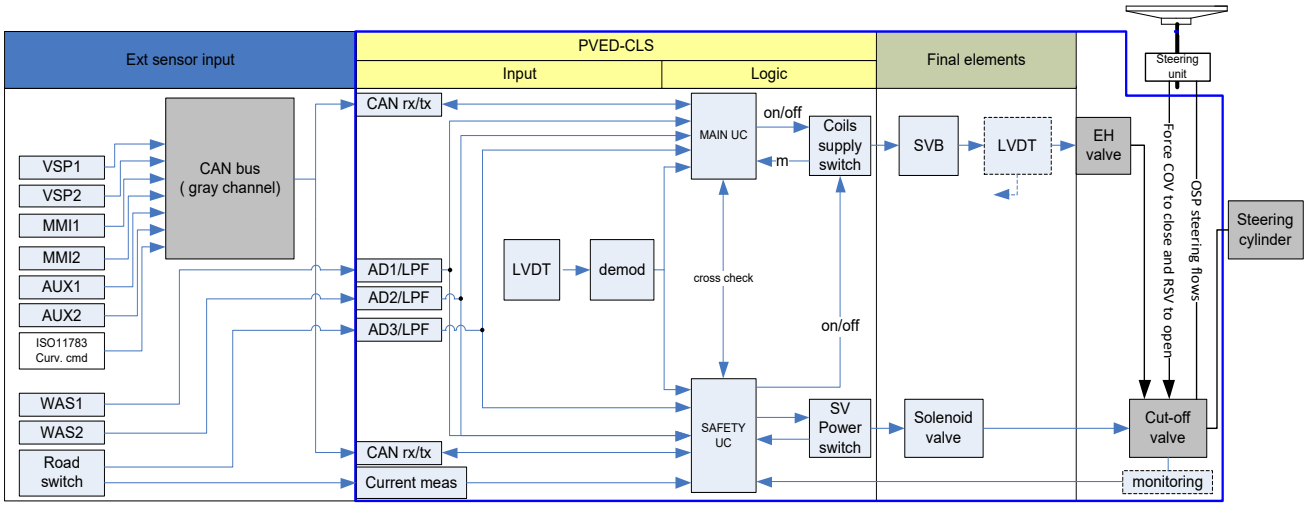

The EHi-H is an inline steering valve which is designed to work without a steering wheel sensor (SASA sensor).
Prior to controlling the EHi-H valve, the PVED-CLS powers the solenoid valve (SV) to pilot/push open 1) the spring-operated cut-off valve (COV) and 2) to close the spring-operated RSV.

Both valves are pushed open and closed respectively by a 26 bar pilot pressure.
When the RSV valve is closed, the OSP steering flows to and from the cylinder are blocked. This is to avoid the reaction flow to work on the OSP and steering wheel in auto-guidance mode. The PVED-CLS can now control the EHi-H valve spool proportionally via the solenoid valve bridge (SVB) and generate EH-steering flows without causing rotation of the steering wheel.
The EHi-H valve is designed to hydraulically force the COV and RSV valve to close and open respectively when the steering wheel is operated. Variable steering wheel steering is not possible with an EHi-H valve.

For details on OSPE/ EHi-H please see /D96/.

2.1.3 Proportional EHi-H Valve with PVED-CLS controller for slave axis

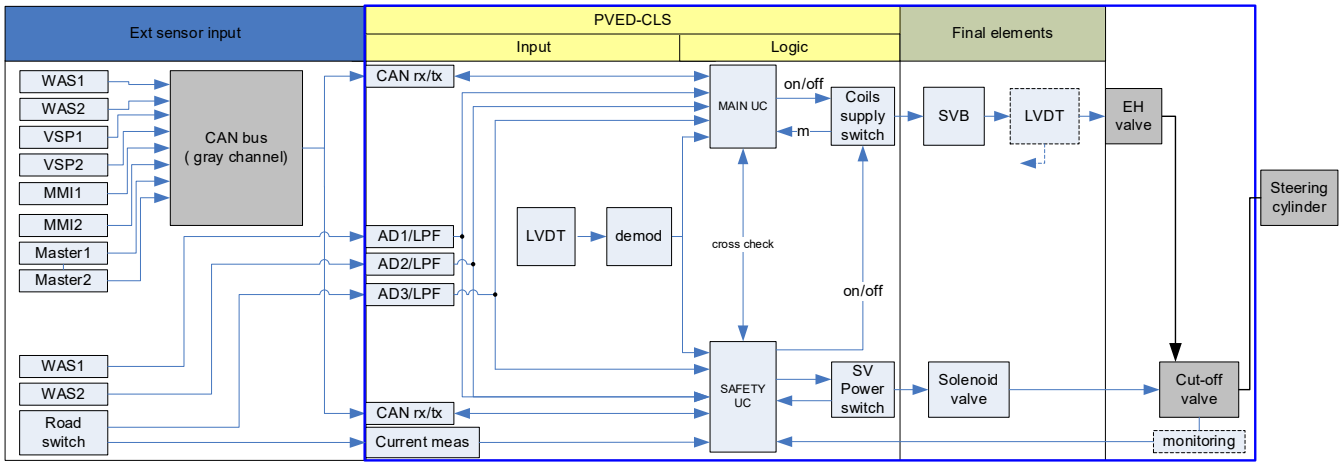

The proportional EHi-H Valve with PVED-CLS controller for slave axis (N-Axis) is adding steering functionality on one or more (n) steering axis than the master axis. Any possibly vehicle steering mode can be achieved with N-Axis steering by the N-Axis MMI command CAN message, containing the virtual axis position (VAP) and the virtual axis angle (VAA). The data set given by VAP and VAA can result in steering modes such as:

- 2-wheel steering (normal)
- Round steering
- Crab steering
- Dog steering
- Customized steering modes

The steering modes can be altered dynamically and seamlessly by the operator during operation by transmitting VAP and VAA data set which results in the requested steering mode.

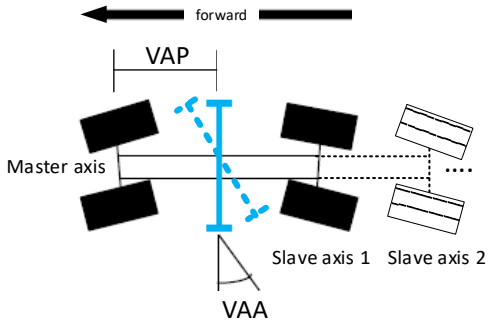

The blue line is the virtual axis which can be shifted horizontally along the wheel base (VAP) and angled relative to the wheel base (VAA). Shifting VAP to the physical slave axis position in a single slave system will result in 2-wheel steering.

2.1.4 Safety system configuration PVED-CLS

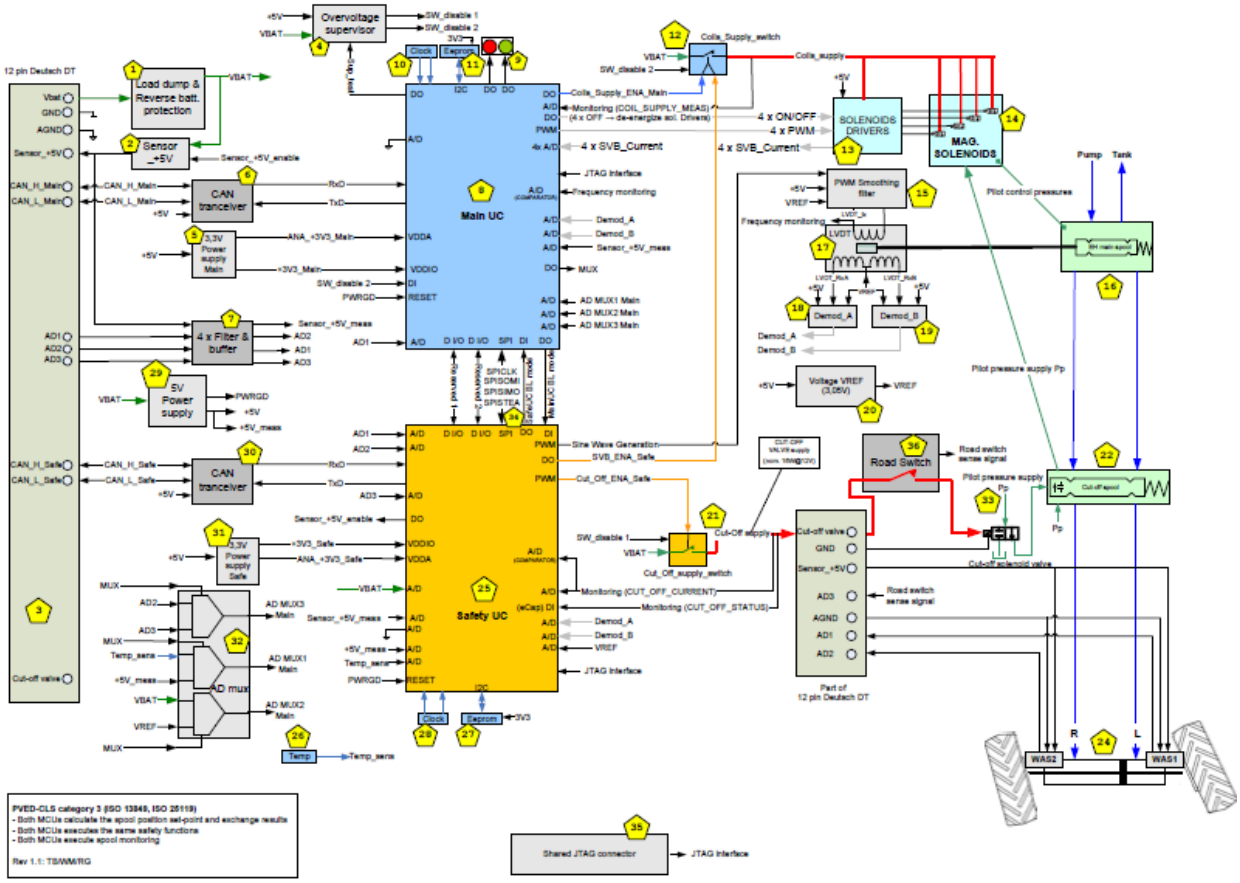

The PVED-CLS is the valve controller and is comprised of hardware and software and performs the following:

- Interfaces to the CAN bus input steering devices, MMI and analogue sensors.
- Selects the active steering mode according to selection criteria
- Performs EH main spool set-point calculation according to control algorithms:
  - Steering wheel steering mode (open-loop flow/cylinder control)
  - Auxiliary steering mode (open-loop flow/cylinder control)
  - Auto-guidance steering mode (closed-loop cylinder position control)
- Execute safety functions
- 'Valve in safe state' control
- Hardware and software monitoring

The PVED-CLS contains two micro-controllers which work in parallel and executes the same software algorithm with the exception that only the MAIN UC controls the solenoid valve bridge to stroke the EH main spool and only SAFETY UC controls the cut-off valve. All external inputs are routed to both micro-controllers.

For details on PVED-CLS please see /D13/, /D46/ and /D47/.

2.2 Tests

The PVED-CLS were examined with regard to the following testing operations:

I. Functional safety including
   - Functional safety management (FSM) und safety lifecycle
   - Analysis of the system structure (System-FMEA)
   - Analysis of the hardware (FMEDA[1] on component or block level, quantitative analysis)
   - Analysis of the software
   - Error simulations and software tests
   - Test of the error prevention measures
   - Functional tests

II. Electrical safety

III. Susceptibility to environmental errors including
   - Climate and temperature
   - IP degree of protection
   - Mechanical effects

IV. Electromagnetic compatibility
   - Immunity
   - Emission

V. Safety information in the product documentation (safety manual, operating instructions)

[1] Failure Mode, Effects and Diagnosis Analysis

3 Basis of Testing

The regulations and guidelines which form the basis of the type testing are listed below.

3.1 European directives

No.	Standard	Title
[L1]	2006/42/EC	DIRECTIVE 2006/42/EC OF THE EUROPEAN PARLIAMENT AND OF THE COUNCIL of 17 May 2006 on machinery, and amending Directive 95/16/EC (recast)
[L2]	2009/66/EC	DIRECTIVE 2009/66/EC OF THE EUROPEAN PARLIAMENT AND OF THE COUNCIL of 13 July 2009 on the steering equipment of wheeled agricultural or forestry tractors
[L3]	2004/108/EC	DIRECTIVE 2004/108/EC OF THE EUROPEAN PARLIAMENT AND OF THE COUNCIL of 15 December 2004 on the approximation of the laws of the Member States relating to electromagnetic compatibility and repealing Directive 89/336/EEC
[L4]	2009/64/EC	DIRECTIVE 2009/64/EC OF THE EUROPEAN PARLIAMENT AND OF THE COUNCIL of 13 July 2009 on the suppression of radio interference produced by agricultural or forestry tractors (electromagnetic compatibility)

Table 3: European directives

3.2 Product standard

No.	Standard	Title
[N1]	ISO 25119-1:2018/A1:2020 (AgPL d)	Tractors and machinery for agriculture and forestry — Safety-related parts of control systems Part 1: General principles for design and development
[N2]	ISO 25119-2:2019 (AgPL d)	Tractors and machinery for agriculture and forestry — Safety-related parts of control systems Part 2: Concept phase
[N3]	ISO 25119-3:2018/ A1:2020 (AgPL d)	Tractors and machinery for agriculture and forestry — Safety-related parts of control systems Part 3: Series development, hardware and software
[N4]	ISO 25119-4:2018/ A1:2020 (AgPL d)	Tractors and machinery for agriculture and forestry — Safety-related parts of control systems Part 4: Production, operation, modification and supporting processes
[N5]	EN 16590-1 :2014	Tractors and machinery for agriculture and forestry – Safety-related parts of control systems – Part 1: General principles for design and development (ISO 25119-1:2010 modified);
[N6]	EN 16590-2 :2014	Tractors and machinery for agriculture and forestry — Safety-related parts of control systems Part 2: Concept phase (ISO 25119-2:2010 modified);

No.	Standard	Title
[N7]	EN 16590-3:2014	Tractors and machinery for agriculture and forestry — Safety-related parts of control systems Part 3: Series development, hardware and software (ISO 25119-3:2010 modified);
[N8]	EN 16590-4 :2014	Tractors and machinery for agriculture and forestry — Safety-related parts of control systems Part 4: Production, operation, modification and supporting processes (ISO 25119-4:2010 modified);

Table 4: Product standard

3.3 Functional safety

No.	Standard	Title
[N9]	IEC 61508-1:2010 (SIL 2)	Functional safety of electrical/electronic/programmable electronic safety-related systems Part 1: General requirements
[N10]	IEC 61508-2:2010 (SIL 2)	Functional safety of electrical/electronic/programmable electronic safety-related systems Part 2: Requirements for electrical/electronic/ programmable electronic safety-related systems
[N11]	IEC 61508-3:2010 (SIL2 / SIL3)	Functional safety of electrical/electronic/programmable electronic safety-related systems Part 3: Software requirements
[N12]	IEC 61508-4:2010 (SIL 2)	Functional safety of electrical/electronic/programmable electronic safety-related systems Part 4: Definitions and abbreviations
[N13]	EN ISO 13849-1:2015 (PL d, Cat. 3)	Safety of machinery - Safety-related parts of control systems Part 1: General principles for design
[N14]	EN ISO 13849-2:2012	Safety of machinery - Safety-related parts of control systems Part 2: Validation

Table 5: Functional safety

3.4 Electrical safety

No.	Standard	Title
[N15]	ISO 15003:2006	Agricultural engineering -- Electrical and electronic equipment -- Testing resistance to environmental conditions

Table 6: Electrical safety

3.5 Susceptibility to environmental errors

3.5.1 IP Code testing

No.	Standard	Title
[N16]	EN 60529/A2:2013	Degrees of protection provided by enclosures (IP Code)

Table 7: IP Code testing

3.6 Electromagnetic compatibility

3.6.1 Immunity tests - Conducted interferences

No.	Standard	Title
[N17]	ISO 7637-2:2004	Road vehicles - Electrical disturbances from conduction and coupling - Part 2: Electrical transient conduction along supply lines only
[N18]	ISO 7637-3:2007	Road vehicles - Electrical disturbances from conduction and coupling - Part 3: Electrical transient transmission by capacitive and inductive coupling via lines other than supply lines

Table 8: Electromagnetic immunity

3.6.2 Immunity tests - Radiated interferences

No.	Standard	Title
[N19]	ISO 14982:1998	Agricultural and forestry machinery - Electromagnetic compatibility - Test methods and acceptance criteria
[N20]	ISO 11452-1:2005	Road vehicles - Component test methods for electrical disturbances from narrowband radiated electromagnetic energy - Part 1: General principles and terminology
[N21]	ISO 11452-2:2004	Road vehicles - Component test methods for electrical disturbances from narrowband radiated electromagnetic energy - Part 2: Absorber-lined shielded enclosure
[N22]	ISO 11452-4:2005	Road vehicles - Component test methods for electrical disturbances from narrowband radiated electromagnetic energy - Part 4: Harness excitation methods
[N23]	ISO 11452-5:2002	Road vehicles - Component test methods for electrical disturbances from narrowband radiated electromagnetic energy - Part 5: Stripline
[N24]	ISO 11452-7:2003	Road vehicles - Component test methods for electrical disturbances from narrowband radiated electromagnetic energy - Part 7: Direct radio frequency (RF) power injection
[N25]	ISO 13766:2006	Earth-moving machinery - Electromagnetic compatibility
[N26]	EN 13309:2010	Construction machinery - Electromagnetic compatibility of machines with internal power supply
[N27]	ISO 10605:2008	Road vehicles - Test methods for electrical disturbances from electrostatic discharge

Table 9: Electromagnetic Immunity

3.6.3 Emission tests

No.	Standard	Title
[N28]	ISO 14982:1998	Agricultural and forestry machinery - Electromagnetic compatibility - Test methods and acceptance criteria
[N29]	DIN EN 55025:2008 (IEC/CISPR 25)	Vehicles, boats and internal combustion engines - Radio disturbance characteristics - Limits and methods of measurement for the protection of on-board receivers

Table 10: Electromagnetic Emission

3.6.4 Electrostatic discharge immunity tests

No.	Standard	Title
[N30]	ISO 10605:2008	Road vehicles - Test methods for electrical disturbances from electrostatic discharge

Table 11: Electromagnetic Immunity

3.7 Environmental testing

3.7.1 Temperature

No.	Standard	Title
[N31]	DIN EN 60068-2-1:2008	Environmental testing - Part 2-1: Tests - Test A: Cold (IEC 60068-2-1:2007); German version EN 60068-2-1:2007
[N32]	DIN EN 60068-2-2:2008	Environmental testing - Part 2-2: Tests - Test B: Dry heat (IEC 60068-2-2:2007); German version EN 60068-2-2:2007
[N33]	DIN EN 60068-2-14:2010	Environmental testing - Part 2-14: Tests - Test N: Change of temperature (IEC 60068-2-14:2009); German version EN 60068-2-14:2009
[N34]	DIN EN 60068-2-78:2014	Environmental testing - Part 2-78: Tests - Test Cab: Damp heat, steady state (IEC 60068-2-78:2012); German version EN 60068-2-78:2013

Table 12: Temperature testing

3.7.2 Mechanical vibration and shock

No.	Standard	Title
[N35]	DIN EN 60068-2-6:2008	Environmental testing - Part 2-6: Tests - Test Fc: Vibration (sinusoidal) (IEC 60068-2-6:2007); German version EN 60068-2-6:2008
[N36]	DIN EN 60068-2-27:2010	Environmental testing - Part 2-27: Tests - Test Ea and guidance: Shock (IEC 60068-2-27:2008); German version EN 60068-2-27:2009
[N37]	DIN EN 60068-2-64:2009	Environmental testing - Part 2-64: Tests - Test Fh: Vibration, broadband random and guidance (IEC 60068-2-64:2008); German version EN 60068-2-64:2008

Table 13: Mechanical vibration and shock testing

3.7.3 IP Testing

No.	Standard	Title
[N38]	DIN EN 60068-2-11:2000	Environmental testing - Part 2: Tests; test Ka: Salt mist (IEC 60068-2-11:1981); German version EN 60068-2-11:1999
[N39]	DIN EN 60529:2014	Degrees of protection provided by enclosures (IP Code) (IEC 60529:1989 + A1:1999 + A2:2013); German version EN 60529:1991 + A1:2000 + A2:2013

Table 14: IP Testing

3.8 Safety information in the product documentation (safety manual, operating instructions)

No.	Standard	Title
[N40]	EN ISO 13849-1:2015 (PL d, Cat. 3)	Safety of machinery – Safety-related parts of control systems Part 1: General principles for design

Table 15: Safety information

4 Documents provided for testing

Following documents were provided by Danfoss Power Solutions ApS to be checked and evaluated by the test house.

No.	Title	Document-No./ File identifier	Rev.	Date
/D1/	Sauer Danfoss Group standard	504H0049_(GS-0049)_Global_Quality_ Operating_ System_V7_20140102.docx	7	02.01.2014
/D2/	Sauer Danfoss Group standard	GS0025D Rating of line failures.doc	D	16.09.2008
/D3/	Sauer Danfoss Group standard	GS0026C Rating of field failures.doc	C	25.08.2008
/D4/	Sauer Danfoss Group standard	Product Verification Plan and Report (PVPR) - GS-0017B (PVPR) PVED-CX, Rev. 2008-12-29.pdf	B	29.12.2008
/D5/	Sauer Danfoss Group standard	GS-0027C_Electronic_Products_Environmental_Testing.pdf	C	22.05.2008
/D6/	OSPE Valve description	11034787-Datasheet-OSPE.pdf 11059881-Brochure-OSPE.pdf 11068682-Technical-information-OSPE.pdf	BA CB DB	10.2013 02.2015 05.2015
/D7/	EHPS Valve description	520l0303-Brochure-EHPS.pdf 520l0521-Technical-information-EHPS.pdf	CA EB	03.2012 05.2015
/D8/	Project Plan	SEHS_05.04_Project_Plan_20141120.mpp		10.11.2014
/D9/	FSM Plan	SEHS_90.05_WF_SEHS_FSM_Plan_Rev1.4_20180201.docx	1.4	01.02.2018
/D10/	SW Product Development and Launch Process	SEHS_05.01_70036901_SW_PDLP_Rev_D_20150828.xlsm	D	28.08.2015
/D11/	SW Development Process	SEHS_05.02_PVED-CLS_Software_Development_Process_Overview_Rev1.7.5_20171124.docx	1.7.5	24.11.2017

No.	Title	Document-No./ File identifier	Rev.	Date
/D12/	Block Diagram	SEHS_10.06_PVED-CLS_cat3_block_diagram_V1.1_20130913.vsd	1.1	13.09.2013
/D13/	SRS	SEHS_90.01_PVED-CLS_Safety_Requirement_Specification_Rev2.1.5_20180604.docx	2.1.5	04.06.2018
/D14/	SW Specification Use cases	SEHS_10.01_PVED-CLS Software Specs, Use Cases_Rev1.22.4_20190212.docx	1.22.4	12.02.2019
/D15/	CAN communication protocol	SEHS_10.02_PVED-CLS communication protocol_Rev3.44_20170630.docx	3,44	30.06.2017
/D16/	Error codes	SEHS_10.03_PVED-CLS_SPN _FMI_list_V2.33_20170425.docx	2,33	25.04.2017
/D17/	SW SRS High Level	SEHS_10.07_PVED-CLS_Software_Specs_High_Level_Requirements_V1.6_20170130.docx	1,6	30.01.2017
/D18/	System Test Plan	ENG_20.03_SEHS_System_Testing_Plan _V1.9.3_20170516.docx	1.9.3	16.05.2017
/D19/	SW Architecture/Design (high level)	SEHS_20.07_SEHS_HLD_V1.5.2_20171013.docx	1.5.2	13.10.2017
/D20/	SW Architecture/Design (low level)	SEHS_20.01_SEHS_LLD_V2.02_20190315.rtf	2.02	15.03.2019
/D21/	HILS Architecture and Test Setup	SEHS_10.08_HILs Architecture and Test setup guide_V1.11_20170928.docx	1,11	28.09.2017
/D22/	SW System- and FIT Test Setup	SEHS_20.04_Software Qualification test setup_V2.5_20171006.docx	2,5	06.10.2017
/D23/	Source Code APP (Application)	SEHS_30.01_SourceCode_APP_V2.02_2019-02-12.zip	2.02	12.02.2019
/D24/	Source Code KWP (Protocol Implementation)	SEHS_30.02_SourceCode_KWP_V1.26_20150211.zip	1.26	02.11.2015
/D25/	Source Code VPS (Valve Platform Solution)	SEHS_30.03_SoureCode_VPS_V1.86_20150209.zip	1.86	09.02.2015
/D26/	Source Code Boot (Bootloader)	SEHS_30.04_SoureCode_BOOT_V3.85_20150313.zip	3.85	13.03.2015
/D27/	QAC Report	SEHS_50.01_QACComplianceReports_V2.02_20190314.zip	2.02	14.03.2019
/D28/	Tool Qualification	SEHS_30.05_Tools_Qualification_Report _V1.9_20190319.docx	1.9	19.03.2019
/D29/	SW Test Specification Application	SEHS_60.01_PVED-CLS_Software_Test_Specs_Application_V1.31.3_20180426.docx	1.31.3	26.04.2018
/D30/	SW Test Specification Control and Monitoring (includes SW-FITs)	SEHS_60.02_PVED-CLS_Software_Test_Specs_Control_And _Monitoring_V1.42_20190229.docx	1.42	28.02.2019
/D31/	SW Test Specification CAN	SEHS_60.03_PVED-CLS_Software_Test_Specs_J1939_V1.30.9_20171006.docx	1.30.9	06.10.2017
/D32/	Unit Test Reports	SEHS_40.01_App_SEHS_UT_Summary_Report_VSEHS_2.02_R_20190213.docx	SEHS_2.02_R	13.02.2019
/D33/	Matlab Unit Test Reports	SEHS_40.02_MatlabUnitTestReports_V1.91_20141007.zip	1.91	07.10.2014
/D34/	HILS Calibration Report	SEHS_40.03_HILs_Calibration_Report_V5.0_20141030.xlsx	5.0	30.10.2014

No.	Title	Document-No./ File identifier	Rev.	Date
/D35/	Soft Error Report	SEHS_40.01_App_SEHS_UT_Summary_Report_VSEHS_2.02_R_20190213.docx	SEHS_2.02_R	13.02.2019
/D36/	HIL System Test Detail	SEHS_40.01_App_SEHS_UT_Summary_Report_VSEHS_2.02_R_20190213.docx	SEHS_2.02_R	13.02.2019
/D37/	System Validation Specification	SEHS_40.01_App_SEHS_UT_Summary_Report_VSEHS_2.02_R_20190213.docx	SEHS_2.02_R	13.02.2019
/D38/	System Test Specification	SEHS_40.01_App_SEHS_UT_Summary_Report_VSEHS_2.02_R_20190213.docx	SEHS_2.02_R	13.02.2019
/D39/	System Test Report	SEHS_40.01_App_SEHS_UT_Summary_Report_VSEHS_2.02_R_20190213.docx	SEHS_2.02_R	13.02.2019
/D40/	FIT Test Specification	SEHS_40.01_App_SEHS_UT_Summary_Report_VSEHS_2.02_R_20190213.docx	SEHS_2.02_R	13.02.2019
/D41/	FIT System Test Report	SEHS_40.01_App_SEHS_UT_Summary_Report_VSEHS_2.02_R_20190213.docx	SEHS_2.02_R	13.02.2019
/D42/	Traceability Matrix	SEHS_40.01_App_SEHS_UT_Summary_Report_VSEHS_2.02_R_20190213.docx	SEHS_2.02_R	13.02.2019
/D43/	Safety Manual	SEHS_40.01_App_SEHS_UT_Summary_Report_VSEHS_2.02_R_20190213.docx	SEHS_2.02_R	13.02.2019
/D44/	Technical Specification	SEHS_40.01_App_SEHS_UT_Summary_Report_VSEHS_2.02_R_20190213.docx	SEHS_2.02_R	13.02.2019
/D45/	FMEDA	SEHS_40.01_App_SEHS_UT_Summary_Report_VSEHS_2.02_R_20190213.docx	SEHS_2.02_R	13.02.2019
/D46/	Hydraulic Diagram	SEHS_20.05_Hydraulic Diagram L4-lab 06-05-2013_20130506.pdf	-	06.05.2013
/D47/	Hardware Design Journal	SEHS_ED055335_PVED_CLS_hardware_design_journal_RevG_20160531.pdf	G	31.05.2016
/D48/	Module Specification	SEHS_ED055788_PVED_CLS_module_specification_RevX_20151210.pdf	X	10.12.2015
/D49/	Circuit Diagram	SEHS_ED056146_PVED_CLS_11103206_SCH_Rev L_20151210.pdf	L	10.12.2015
/D50/	Layout	SEHS_ED056316_PVED_CLS_PCB_Rev L_ 20151210.pdf	L	10.12.2015
/D51/	EMC Test Specification	SEHS_ED057710_CNH_EMC_test_specification_ RevC_20130612.pdf	C	12.06.2013
/D52/	Hardware Verification and Validation Journal	SEHS_ED059871_hardware_verification_and_validation_journal_RevE_20160531.pdf	E	31.05.2016
/D53/	Environmental Test Overview	SEHS_40.07_Overview PVPR PVED-CLS GS0027_CNH_V1.7_20150826.xlsx	1.7	26.08.2015
/D54/	Environmental Test Specification	SEHS_ED060000_GS0027_electrical_test_specification_RevA_20130501.pdf	1.0	11.02.2015
/D55/	Environmental Test Specification	CNH 9.2.1.5 Mechanical Shock (Operational) test specification.docx	1.0	26.03.2015
/D56/	Environmental Test Specification	CNH 9.4.1.5 Humidity (Icing Cycle) test specification.docx	1.0	26.03.2015
/D57/	Environmental Test Specification	GS0027 6.2.5 Damp heat, steady state test specification.docx	1.0	11.02.2015
/D58/	Environmental Test Specification	CNH 8.1.4 Mechanical Handling test specification.docx	1.0	01.08.2015
/D59/	Environmental Test Specification	CNH 9.2.1.4 Mechanical Shock (Handling) test specification.docx	1.0	10.04.2015
/D60/	Environmental Test Specification	CNH 9.3.2.4 Dust Ingress test specification.docx	1.1	12.05.2015

No.	Title	Document-No./ File identifier	Rev.	Date
/D61/	Environmental Test Specification	CNH 9.3.3.4 Water Ingress (Hose Washing) test specification.docx	1.1	13.05.2015
/D62/	Environmental Test Specification	CNH 9.3.3.5 Water Ingress (Pressure Washing) test specification.docx	1.1	12.05.2015
/D63/	Environmental Test Specification	CNH 9.4.3.4 Chemical Resistance test specification.docx	1.0	10.04.2015
/D64/	Environmental Test Specification	CNH 9.2.2.6 Mech. Vibration (Slow Sine Sweep Vibration) test specification.docx	1.0	08.01.2015
/D65/	Environmental Test Specification	CNH 9.6.4. Combined environment test specification.docx	1.0	10.04.2015
/D66/	Environmental Test Specification	CNH 9.1.1.5 High Temperature test specification.docx	1.0	11.02.2015
/D67/	Environmental Test Specification	CNH 9.1.2.4 Low Temperature Soak test specification.docx	1.0	10.04.2015
/D68/	Environmental Test Specification	CNH 9.1.3.4 Temp. Cycle test specification.docx	1.0	10.02.2015
/D69/	Environmental Test Specification	CNH 9.1.4.4 Temp. Shock test specification.docx	1.0	19.02.2015
/D70/	Environmental Test Specification	CNH 9.2.2.4 Mech. Vibration Wheeled (Random) test specification.docx	1.0	10.02.2015
/D71/	Environmental Test Specification	SEHS_40.10_ENS0310_RevH_20110605 .pdf	H	05.06.2011
/D72/	Environmental Test Specification	CNH 9.7.4 Operating Voltages test specification.docx	1.0	08.04.2015
/D73/	Environmental Test Specification	CNH 9.7.5 Over voltage test specification.docx	1.0	08.04.2015
/D74/	Environmental Test Specification	CNH 9.8.12 Stripline - Radiated Immunity Test specification.docx	1.0	14.04.2015
/D75/	Environmental Test Specification	CNH 9.8.11 ASLE - Radited Immunity test specification.docx	1.0	14.04.2015
/D76/	Environmental Test Specification	CNH 9.8.13 Bulk Current Injection - Conducted Immunity Test specification.docx	1.0	14.04.2015
/D77/	Environmental Test Specification	CNH 9.8.16 Electrostatic Discharge - Unit in operation test specification.docx	1.1	31.07.2015
/D78/	Environmental Test Specification	CNH 9.8.18 Emissions Test - Radiated test specification.docx	1.0	24.02.2015
/D79/	Environmental Test Specification	CNH 9.8.19 Emissions Test - Conducted test specification.docx	1.0	14.04.2015
/D80/	Danfoss Power Solutions standard	504H0045_(GS-0045)_Product_Liability_Review_Committee_issue_12_20160115.docx	12	15.01.2016
/D81/	Service tool test report	SEHS_PLUS1_Service_tool_test_reports _V1.95_20160223.zip	1.95	23.02.2016
/D82/	Release Note V1.96	SEHS_00.00_Release_Note_V1.96_2016 0727.docx	1.96	27.07.2016
/D83/	Firmware Release Note V1.96	SEHS_00.04_PVED-CLS 1.96 Firmware release note_V1.0_20160716.docx	1.0	11.07.2016
/D84/	Document list V1.97	DN87130T_Rev1.1_sign_documentation_ changes_V1.97.xlsx	1.97	21.03.2017
/D85/	Release Note V1.97	SEHS_00.00_Release_Note_V1.97_2016 1026.docx	P	26.10.2016
/D86/	Impact Analysis V1.97	SEHS_00.03_Impact_Analysis_Report_V 1.97_20161118.docx	P	18.11.2016

No.	Title	Document-No./ File identifier	Rev.	Date
/D87/	Firmware Release Note V1.97	SEHS_00.04_PVED-CLS 1.97 Firmware release note_V1.2_20170117.docx	1.2	17.01.2017
/D88/	Document list V1.98	DN87130T_Rev1.1_sign_documentation_changes_V1.98.xlsx	1.98	23.05.2017
/D89/	Release Note V1.98	SEHS_00.00_Release_Note_V1.98_20170331.docx	P	31.03.2017
/D90/	Impact Analysis V1.98	SEHS_00.03_Impact_Analysis_Report_V1.98_20170626.docx	R	26.06.2017
/D91/	Firmware Release Note V1.98	SEHS_00.04_PVED-CLS 1.98 Firmware release note_V1.0_20170331.docx	1.0	31.03.2017
/D92/	Document list V2.00	DN87130T_Rev1.1_sign_documentation_changes_V2.00.xlsx	2.00	04.06.2018
/D93/	Release Note V2.00	SEHS_00.00_Release_Note_VSEHS_2.00_R_20171220.docx	R	20.12.2017
/D94/	Impact Analysis V2.00	SEHS_00.03_Impact_Analysis_Report_V2.00_2018_06_04.docx	V	04.06.2018
/D95/	Firmware Release Note V2.00	SEHS_00.04_PVED-CLS 2.00 Firmware release note_V2.0_20171218.docx	2.0	18.12.2017
/D96/	EHi Valve description	ED070247_EHi_valve_DFMEA_and_Safety Functions_RevC.pdf ED072000_Design_Journal_and_Fault_Exclusion_claim_RevB_20180515.pdf ED074137_EHi_valve_Product_Specification_and_testreport_RevB6_20171114.pdf BC00000379en-US0201_Technical_Information_V0202_010118.pdf AI00000322en-US0201_Datasheet_Ehi_Steering_valve_April_2017.pdf	C B B6 0202 -	10.01.2018 15.05.2018 14.11.2017 01.01.2018 04/2017
/D97/	Impact Analysis V2.02	SEHS_00.03_Impact_Analysis_Report_V2.02_20190322.docx	-	22.03.2019
/D98/	CAN Boot-Loader Protocol	SEHS_10.09_PVED-CLS_KWP2000_protocol_V1.79_20180502.docx	1.79	02.05.2018
/D99/	User Manual	SEHS_05.04_PVED-CLS_UserManual_2.02_R1.7_20190114.docx	1.7	14.01.2019
/D100/	PLUS+1 Service Tool User Guide	SEHS_60.24_Plus+1_Service_Tool_User Guide_STv10.1.7_V2.8_20190313.docx	2.8	13.03.2019
/D101/	Product and Software Impact Analysis Report	SEHS_00.03_Impact_Analysis_Report_V2.02_20190322.docx	2.02	22.03.2019
/D102/	Service Tool Test Report	SEHS_60.25_PLUS1_Service_tool_test_reports_V2.02_revB_20190315.zip	2.02 revB	15.03.2019
/D103/	Service Tool Release Note	SEHS_00.02_Service_Tool_Release_Note_SEHS_2.02_rev_B_20190325.docx	SEHS_2.02_rev_B	25.03.2019
/D104/	HIL System Test Summary Reports	SEHS_60.04_HIL_SystemTest_Summary_Reports_V2.02_20190313.zip	2.02	13.03.2019
/D105/	Software Release Note V2.02 (KPTronix to NOR team)	SEHS_00.00_Release_Note_VSEHS_2.02_R_20190327.docx	SEHS_2.02_R	27.03.2019
/D106/	Firmware Release Note V2.02 (customer)	SEHS_00.04_PVED-CLS 2.02 Firmware release note_V1.1_20190313.docx	1.1	13.03.2019
/D107/	PLUS+1 Service Tool Summary Report	SEHS_60.23_Plus+1 service tool_SummaryReport_V2.02_RevB_20190315.html	2.02_RevB	15.03.2019

No.	Title	Document-No./ File identifier	Rev.	Date
/D108/	HW FIT Test Report	SEHS_70.04_Test_Report_FIT_Test_2.02_20190313.zip	2.02	13.03.2019
/D109/	Functional safety validation checklist report	SEHS_90.06_Functional_Safety_validation_checklist_report_V2.02.xlsx	2.02	22.03.2019
Documents for the N-Axis update				
/D110/	FSM Plan	WF_SEHS_FSM_Plan_ver_1.7_20200615.docx	1.7	15.06.2020
/D111/	SRS	SEHS_90.01_PVED-CLS_Safety_Requirement_Specification_Rev2.1.9_20190829.docx	2.1.9	29.08.2019
/D112/	SW Specification Use cases	PVED-CLS Naxis-slave Software Specs, Use Cases_ver_1.03_20190828.docx	1.03	28.08.2019
/D113/	CAN communication protocol	PVED-CLS_MultiAxis-Steer_communication_protocol_ver1.02_20191029.docx	1.02	29.10.2019
/D114/	Error codes	PVED-CLS Naxis SPN & FMI list_ver_2.47_20190718 .docx	2.47	18.07.2019
/D115/	SW SRS High Level	PVED-CLS Software Specs, High Level Requirements_NAXIS_ver_1.0_20190829.docx	1.0	29.08.2019
/D116/	SW Architecture/Design (high level)	PVED-CLS_HLD_NAXIS_ver_1.01_20190830.docx	1.01	30.09.2019
/D117/	SW Architecture/Design (low level)	App_SEHS_LLD_NAXIS_ver_1.0_20190816.rtf	1.0	16.08.2019
/D118/	Source Code APP (Application)	sourceCode_App_NAXIS_1.00R_20191014.zip	1.00	14.10.2019
/D119/	QAC Report	Test_Report_Qualification_test_NAXIS_1.00_R_B02_20190903.zip	1.00	03.09.2019
/D120/	Tool Qualification	WF_Tools_Qualification_Report_ver_2.0_20190926.docx	2.0	26.09.2019
/D121/	SW Test Specification Application	PVED-CLS_Software_Test_Specs _Application_ver_1.0.1_20190829.docx	1.0.1	29.08.2019
/D122/	SW Test Specification Control and Monitoring	PVED-CLS_Software_Test_Specs _Control_And_Monitoring_ver_1.0.1_20192823.docx	1.0.1	23.08.2019
/D123/	SW Test Specification CAN	PVED-CLS_Software_Test_Specs_J1939_ver_1.0.1_20190409.docx	1.0.1	09.04.2019
/D124/	SW FIT Test Specification	PVED-CLS_Software_Test_Specs_Software_FIT_NAXIS_ver_1.2_20190807.docx	1.2	07.08.2019
/D125/	Unit Test Summary report	NAXIS_UT_Summary_Report_NAXIS_1.00_R_20190903.docx	1.00	03.09.2019
/D126/	Soft Error Report	PVED-CLS_Soft_Error_Analysis_Report _ver_1.01._20190830.docx	1.01.	30.08.2019
/D127/	HIL System Test Detail	HIL_SystemTest_Detail_Reports_NAXIS_1.00_20191015.zip	1.00	15.10.2019
/D128/	System Validation Specification	System_safety_validation_specification_ver_1.10_20190913.docx	1.10	13.09.2019
/D129/	Software Qualification Test Specification	PVED-CLS_Software_Qualification_test_specification_ver_3.4_20200629.docx	3.4	29.06.2020
/D130/	System Qualification Test Report	Test_Report_Qualification_test_NAXIS_1.00_R_B02_20190903.zip	1.00B02	03.09.2019

No.	Title	Document-No./ File identifier	Rev.	Date
/D131/	FIT Test Specification	System_FIT_specification_ver1.6_20191008.docx	1.6	08.10.2019
/D132/	FIT System Test Report	System_FIT_Report_Naxis_ver_1.1_20191014.docx	1.1	14.10.2019
/D133/	Traceability Matrix	NAXIS_Traceability_Report_V.1.00_20190904.docx	1.00	04.09.2019
/D134/	Safety Manual	PVED-CLS_MultiAxis-Steer_Technical_information_ver0104_20191004.docx	0104	04.10.2019
/D135/	Technical Specification	PVED-CLS Technical Specification_ver_2.4_20190912.docx	2.4	12/09/2019
/D136/	PLUS+1 service tool user guide	PLUS+1_Service_Tool_User_Guide_STv11.1.5_V3.0_20190905.docx	3.0	05.09.2019
/D137/	Product and Software Impact Analysis Report	NAXIS_1.00_Impact_Analysis_Report_ver_1_20191015.docx	1.00	15.10.2019
/D138/	Service tool test report	Plus+1_N-axis_1.00_Test_Report_20190509.xlsx	1.00	09.05.2019
/D139/	Service tool release note	N-Axis_Service_Tool_Release_Note_NAXIS_1.00_rev_C_20190905.Docx	1.00rev C	05.09.2019
/D140/	HIL System test summary reports	HILS_SystemTest_Summary_Reports_NAXIS_1.00_20191014.zip	1.00	14.10.2019
/D141/	Software release note	Naxis_Release_Note_NAXIS_1.00_R_B02_20190918.docx	1.00B02	18.09.2019
/D142/	Firmware release note (customer)	PVED-CLS_MultiAxis-Steer_Firmware_release_note_ver1.2_20191029.docx	1.2	29.10.2019
/D143/	PLUS+1 service tool summary report	Plus+1_N-axis_1.00_Test_Report_20190905.xlsx	1.00	05.09.2019
/D144/	HW FIT Test Report	Test_Report_FIT_Test_NAXIS_1.00_20190819.zip	1.00	19.08.2019
/D145/	Functional safety validation checklist report	N-Axis_R1.00_Functional_Safety_validation_checklist_report_V1.00.xlsx	1.1	22.06.2020
/D146/	EEP Parameter Validation Test Specification	EEP Parameter Validation Test Spec_ver_1.1_20190409.docx	1.1	09.04.2019
/D147/	Spool Calibration State Machine Test Specification	Spool_Calibration_State_Machine in nAxis_ver_1.0.1_20190819.xlsx	1.0.1	19.08.2019
/D148/	PVED-CLS avalanche stress test specification	PVED-CLS avalanche stress test specification_NAXIS_1.00_ver_3.5_20190724.docx	3.5	24.07.2019
/D149/	Plus+1 service tool test specification	Plus+1 service tool_Test_Specs_Application_NAXIS_ver_1.0_20190916.docx	1.0	16.09.2019
Documents for the N-Axis update 1.01				
/D150/	Impact Analysis	NAXIS_1.01_Impact_Analysis_Report_ver_1_20210528.docx	NAXIS_1.01	28.05.2021
/D151/	Functional Safety Validation Checklist	N-Axis_R1.01_Functional_Safety_validation_checklist_report_V1.1.xlsx	1.1	10.09.2021
/D152/	Code Compliance Report	Naxis_QAC_Code_Compliance_Report_1.1_20210531.docx	1.1	31.05.2021
/D153/	Release 1.01 Modifications	Naxis_Release_1.01_Modifications_v1.01_20210510.docx	v1.01	10.05.2021
/D154/	Release Note_NAXIS 1.01	Naxis_Release_Note_NAXIS_1.01_R_B02_20210907.docx	NAXIS_1.01_R_B02	07.09.2021

No.	Title	Document-No./ File identifier	Rev.	Date
/D155/	UT – Summary Report	NAXIS_UT_Summary_Report_1.01_R_B02_20210531.docx	NAXIS_1.01_R	31.05.2021
/D156/	Firmware Release Note	PVED-CLS MultiAxis-Steer Firmware release note_ver1.1_20210517.docx	1.1	17.05.2021
/D157/	Technical Information	PVED-CLS MultiAxis-Steer Technical information_ver106_20210914.docx	0106	14.09.2021
/D158/	Software Test Specs	PVED-CLS_Software_Test_Specs_Application_ver_1.1_20210205.docx	1.1	05.02.2021
/D159/	QAC Summary Report	Naxis_QAC_Summary_Report_1.01_2021_09_03.zip	1.01	24.08.2021
/D160/	QAC Deviation Report	Naxis_QAC_Deviation_Report_1.01_20210222.zip	1.01	22.02.2021
/D161/	HILS Manual Report	TC_002_009_12 -Virtual Axis position Ramping.zip	NAXIS_1.01_R_B02	17.02.2021
/D162/	HILS Manual Report	TC_002_009_25 - CSS and Valve current nAxis Preoperational state.zip	NAXIS_1.01_R_B02	17.02.2021
/D163/	Unit Test Vcast Report	Vcast_Reports_1.01_R_B02_20210531.zip	B02	31.05.2021

Table 16: Documents provided for Testing

5 Performance and result of tests

5.1 Test reports

Following test reports were issued by TÜV SÜD Rail GmbH or other accredited test laboratories.

No.	Title	Document-No./ File identifier	Rev.	Date
/R1/	Environmental Test Report	SEHS_ED060001_GS0027_electrical_test_report_RevA_20130814.pdf	1.1	03.06.2015
/R2/	Environmental Test Report	PVED-CLS 9.2.1.5 Mechanical Shock (Operational) test report.docx	1.0	30.04.2015
/R3/	Environmental Test Report	PVED-CLS 9.4.1.5 Humidity (Icing Cycle) test report.docx	1.1	29.05.2015
/R4/	Environmental Test Report	PVED-CLS 6.2.5 Damp heat, steady state test report.docx	1.1	03.06.2014
/R5/	Environmental Test Report	PVED-CLS 8.1.4 Mechanical Handling test report.docx	1.1	15.05.2015
/R6/	Environmental Test Report	PVED-CLS 9.3.2.4 Dust Ingress test report.docx	1.1	29.05.2015
/R7/	Environmental Test Report	PVED-CLS 9.3.3.4 Water Ingress (Hose Washing) test report.docx	1.2	29.05.2015
/R8/	Environmental Test Report	PVED-CLS 9.3.3.5 Water Ingress (Pressure Washing) test report.docx	1.2	29.05.2015
/R9/	Environmental Test Report	PVED-CLS 9.4.3.4 Chemical Resistance test report.docx	1.0	28.05.2015
/R10/	Environmental Test Report	PVED-CLS 9.2.2.6 Mech. Vibration (Slow Sine Sweep Vibration) test report.docx	1.1	28.05.2015
/R11/	Environmental Test Report	PVED-CLS 9.6.4. Combined environment test report.docx	1.3	28.05.2015
/R12/	Environmental Test Report	PVED-CLS 9.1.1.5 High Temperature test report.docx	1.4	27.05.2015
/R13/	Environmental Test Report	PVED-CLS 9.1.2.4 Low Temperature Soak test report.docx	1.3	27.05.2015
/R14/	Environmental Test Report	PVED-CLS 9.1.3.4 Temp. Cycle test report.docx	1.4	27.05.2015
/R15/	Environmental Test Report	PVED-CLS 9.1.4.4 Temp shock test report.docx	1.2	27.05.2015
/R16/	Environmental Test Report	PVED-CLS 9.2.2.4 Mech. Vibration Wheeled (Random) test report.docx	1.2	28.05.2015
/R17/	Environmental Test Report	HALT-Report(PVED-CLS_re-test).pdf	-	04.04.2015
/R18/	Environmental Test Report	PVED-CLS 500B0430en Drop test of package test report.pdf	-	18.05.2015
/R19/	Voltages Testing	PVED-CLS 9.7.4 Operating Voltages test report.docx SASA 9.7.4 Operating Voltages test report.docx	1.0 1.1	21.05.2015 04.06.2015
/R20/	Voltages Testing	PVED-CLS 9.7.5 Over voltage test report.docx SASA 9.7.5 Over voltage test report.docx	1.0 1.1	21.05.2015 04.06.2015
/R21/	Voltages Testing	TR_15LA00123_04el_SASA_groupA-signed.pdf – Report No. 15-01839	2.0	15.05.2015

/R22/	EMC Testing	PVED-CLS 9.8.12 Stripline - Radiated Immunity test report.docx SASA 9.8.12 Stripline - Radiated Immunity test report.docx	1.0 1.1	04.06.2015 17.07.2015
/R23/	EMC Testing	PVED-CLS 9.8.11 ASLE - Radiated Immunity test report.docx SASA 9.8.11 ASLE - Radiated Immunity test report.docx	1.0 1.1	29.05.2015 17.07.2015
/R24/	EMC Testing	PVED-CLS 9.8.13 Bulk Current Injection - Conducted Immunity test report.docx SASA 9.8.13 Bulk Current Injection - Conducted Immunity test report.docx	1.2 1.0	31.07.2015 13.08.2015
/R25/	EMC Testing	PVED-CLS 9.8.16 Electrostatic Discharge - In operation test report.docx SASA 9.8.16 Electrostatic Discharge - In operation test report.docx	1.2 1.0	12.08.2015 13.08.2015
/R26/	EMC Testing	PVED-CLS 9.8.18 Emissions Test - Radiated Tests Report.docx SASA Emissions Tests Report.docx	1.0 1.0	03.08.2015 22.07.2015
/R27/	EMC Testing	PVED-CLS 9.8.19 Emissions Test - Conducted Tests Report.docx	1.0	29.07.2015
/R28/	Checklist IEC 61508-1	IEC 61508 FSM Danfoss Steering Project Rev.1.1 2014-12-18.pdf	1.1	18.12.2014
/R29/	Checklist IEC 61508-2	Deltacheckliste IEC 61508 - Part2 2ndEd.docx	1.0	17.12.2014
/R30/	Checklist IEC 61508-3	IEC 61508-3 Software 2nd Edition.pdf IEC 61508-3_Software Steering Project_1.3.docx	1.0 1.3	10.10.2012 17.12.2014
/R31/	Checklist ISO 25119-1	ISO 25119-1 General principles for design and development.docx	1.0	21.07.2015
/R32/	Checklist ISO 25119-2	ISO 25119-2 Concept phase.docx	1.0	21.07.2015
/R33/	Checklist ISO 25119-3	ISO 25119-3 Series development, hardware and software.docx	1.0	21.07.2015
/R34/	Checklist ISO 13849-1 HW	ISO 13849-1 - 2nd Edition Hardware.docx	1.0	24.07.2015
/R35/	Checklist ISO 13849-1 SW	ISO 13849-1 - 2nd Edition Software.docx	1.0	24.07.2015
/R36/	Review Report	Review Report_Manual_IEC61508.docx	1.1	18.05.2015
/R37/	Review Report	PVED-CLS Review FSM Plan - SRL3 ISO 25119_V1.1.docx	1.1	27.08.2015
/R38/	Review Report	PVED-CLS_Review_FMEDA_1_1.docx	1.1	19.12.2014
/R39/	Review Report	PVED-CLS_Review_Environmental_1_1.docx	1.1	21.07.2015
/R40/	Checklist ISO 13849-1	Deltachecklist ISO 13849-1 - 3rd Edition_V1.0.docx	1.0	19.09.2016
/R41/	Review Report	Review Report_SW_Release_1.95	1.0	03.08.2016
/R42/	Review Report	Review Report_SW_Release_1.96_Rev.1.2	1.2	11.11.2016

/R43/	Review Report	Review Report_SW_Release_1.97+1.98 _Rev.1.0	1.0	28.08.2017
/R44/	Review Report	Review PVD-CLS SW V2.00	1.0	27.08.2018
/R45/	Review Report	Review Protocol_Danfoss_EHi valve_mech_Rev.1.0_2019-01-15_tfu	1.0	15.01.2019
/R46/	Review Report	Review_Impact Analysis SW Release V2.02_Rev.1.1	1.1	23.08.2019
/R47/	Checklist IEC 61508-2	2019-03-21_Kptronic_IEC 61508-3 2nd_ed_Rev1.1.pdf	1.1	29.03.2019
/R48/	Review Report	Review Protocol Documents- Rev.1.3.pdf	1.3	21.07.2020
/R49/	Checklist ISO 25119-1	ISO 25119-1 General principles for design and development.docx	1.0	15.11.2021
/R50/	Checklist ISO 25119-2	ISO 25119-2 Concept phase.docx	1.0	15.11.2021
/R51/	Checklist ISO 25119-3	ISO 25119-3 Series development, hardware and software.docx	1.0	15.11.2021
/R52/	Checklist ISO 25119-4	ISO 25119-4 Production, operation, modification and supporting processes.docx	1.0	18.11.2021
/R53/	Review Report	Review Protocol Documents N-Axis_1_01_Rev.1.2.pdf	1.2	13.10.2021

Table 17: Test reports

5.2 Functional Safety Management and Lifecycle Audit

A Functional Safety Management and Lifecycle Audit was executed to evaluate the management and technical activities during the overall, E/E/PES and Software safety lifecycle phases which are necessary for the achievement of the required functional safety of the E/E/PES safety related systems.

Result:

The analysis of the organization and procedures of Danfoss Power Solutions ApS has shown that the requirements specified in /D13/ /D14/ and /D17/ for SIL 2 according IEC 61508 are covered.

5.3 System Failure Mode and Effects Analysis (System-FMEA)

The system specification was tested with regard to consistency and completeness compared with the testing principles and with regard to the comprehensibility of the individual instructions. Performance of a system failure mode and effects analysis (System-FMEA) demonstrated whether the structures and measures provided for in the system specification are capable of satisfying the functional safety requirements.
The System-FMEA verified the defined safe state of the unit under evaluation in the event of possible malfunctions. Probable deviation from the specified function of the unit under evaluation was also considered to be a malfunction.

Fault detection is assured by means of following basic techniques:

- self-test at power up and during operation
- two channel control logic with cross check
- redundancy

Result:
The system FMEA and the fault insertion tests as described in the next chapter demonstrated that the system structure of the PVED-CLS meets the requirements of the regulations and standards listed in clause 3 of this report

5.4 Failure Mode Effect and Diagnosis Analysis (FMEDA) and Hardware Fault Simulations (FIT)

Fault assumptions on component level are based on the fault models specified in annex A of IEC 61508 part 2, the technical regulations listed under clause 3.3.
FMEDA was performed to determine the effect of each failure mode of each component on the behavior of the safety-related system with diagnostic tests and diagnostics for dangerous failures.[2]
A number of representative fault simulations were defined by TÜV SÜD Rail GmbH and have been witnessed during an onsite visit at Danfoss Power Solutions ApS. Representative faults are faults which represent an entire series of faults which have an identical effect on the functions of the system.

Results:
The FMEDA showed that the occurrence of a single fault do not lead to loss of the safety functions. The individual architectural constrains are sufficient and their corresponding degree of fault detection provide the required degree of effectiveness. The results of the fault insertion tests are documented in the report /D39/ and /D41/.
The results found to be acceptable.

[2] Testing proceeded from the assumption that a single fault shall not lead to loss of the safety function (or would have to be detected within the fault tolerance time).

5.5 Testing of fault avoidance measures

Testing of the individual fault avoidance measures in the individual design phases is supposed to demonstrate that the implemented hardware and software are sufficiently fault-free. The following techniques and measures were used:

- Project management
- Documentation
- Structured specification
- Inspection of the specification or walk-through of the specification
- Observance of relevant guidelines and standards
- Structured design
- Modularization
- Inspection of the hardware
- Functional testing (also under environmental conditions)
- Operational and maintenance instructions
- User- and maintenance friendliness

Result:

The individual measures for the avoidance of failures provide the required degree of effectiveness and are specified in documents /D7/ to /D11/results of the evaluation are documented in the reports listed in section 5.1.

5.6 Quantitative analysis

For the quantitative analysis of the PVED-CLS, the basic failure rate λ (FIT, 10-9 h-1) for each component was calculated. Probability for Failure per Hour of the safety function was calculated.

PVED-CLS without ext. Sensors
OSPE with Cut-off Valve Diagnostic (COVD)
reliability data:

IEC61508:		
PFH [1/h]	1,68E-08	
SIL	SIL3	

ISO13849:		
MTTFd [years]	36	High
DCavg [%]	97,32	Medium
CCF [%]	2	Acc to IEC61508
Category	3	
Average PFHd [1/h]	1,45E-07	
PL	d	

ISO25119:		
MTTFd [years]	36	High
DCavg Main [%]	98,93	High
DCavg Safety [%]	95,88	High (limiting)
CCF [%]	2	Acc to IEC61508
Category	3	
AgPL	d	

Result:

The probability of dangerous failure per hour (PFH) of the PVED-CLS calculated is within than the admissible value of IEC 61508-1 for SIL 2 $\geq 10^{-7}$ to $<10^{-6}$ (see [N9]).

The mean time to dangerous failure ($MTTF_d$) of the PVED-CLS resulting from the calculation is "High" according to EN ISO 13849-1 (see [N13]).
(30 years ≤ $MTTF_d$ 36 years). The maximum value of 36 years has been taken into account.

The diagnostic coverage (DC) of the PVED-CLS calculated is "Medium" according to EN ISO 13849-1 (90% ≤ DC < 99%) (see [N13]).

With the values of $MTTF_d$ and DC, PVED-CLS meets the quantitative requirements of Category 3 and PL d according to EN ISO 13849-1 (see [N13]).

The mean time to dangerous failure ($MTTF_d$) of the PVED-CLS resulting from the calculation is "High" according to ISO 25119-1 (see [N1]) (30 years ≤ $MTTF_d$ 36 years). The maximum value of 36 years has been taken into account.

The diagnostic coverage (DC) of the PVED-CLS calculated is "High" according to ISO 25119-1 (see [N1]) (90% ≤ DC < 99%).

With the values of $MTTF_d$ and DC, PVED-CLS meets the quantitative requirements of Category 3 and AgPL d according to ISO 25119-1 (see [N1]).

The calculations are recorded in the document /D45/and /R38/.

5.7 Software evaluation

The software of the safety PVED-CLS series was written in C and some code in Assembler.

The software part is developed according IEC 61508 SIL2 and ISO 25119-3 SRL3.
The software versions starting from 2.00 are developed according IEC 61508 SIL3.

5.7.1 Analysis of the Software

The individual test operations are supposed to demonstrate that the Software architecture specification is complete and correct and that the required safety-related measures for fault control are applied:

- Analysis of requirement specification
- Analysis of software architecture specification
- Analysis of the implemented self-tests and monitoring

Result:

The planning of the SW development is documented within the following plans:

- FSM Plan /D9/
- Project Plan (/D8/)
- SW Product Development and Launch Process (/D10/)

The software requirements are described in the list of high level requirements for the Safe EH Steering software to run in the PVED-CLS unit. The decomposition starts with the user requirements followed by the functional, non-functional and safety requirements as well as management and validation related ones (/D17/).

The detailed architecture and the software requirements are described by use case inside the low-level description (/D20/). The requirements are maintained in Caliber database.
The software tests as described in the next chapter demonstrated that the specification is complete and correct and that the measures required for controlling faults are complying with the requirements. The used techniques and measures are documented within the FSM plan (/D9/).

5.7.2 Software tests

Based on the analysis of the software specification and the performed analysis representative Software fault simulations and Software tests were defined and executed. These tests should demonstrate the effectiveness of the implemented safety-related measures and the time behavior.

Result:

Software tests are performed on unit level and requirement based. The traceability matrix /D42/ shows the requirement driven test coverage. The detailed results of each single test case are documented (/D32/, /D33/,/D36/).
The Software PDLP process (/D10/, /D11/) guaranties a validated release (/D39/).
The performed fault simulations (/D40/) and software tests did not result in any deviations from the anticipated results. The reports (/D32/, /D33/, /D39/, /D41/, /D155/and /D159/ to /D163/) indicate that the software requirements according to SIL2 of IEC 61508-3 and SRL3 of ISO25119-3 are met.

5.8 Electrical Safety

The electrical safety was tested in accordance with [N15] and the regulations related to these standards.

Result:

The results about the electrical safety are documented in /R19/ to /R21/. The tests demonstrated that the PVED-CLS fulfils the requirements referring to the electrical safety

5.9 Climatic stress-tests

The strength of the design versus climatic stress was tested in accordance with [N31] to [N34] and the related standards.

Result:

The individual tests are recorded in the reports /R3/, /R4/, and /R12/ to /R15/.
The test sample worked properly during and after the test.

5.10 Mechanical stress-tests

The strength of the design versus mechanical stress was tested in accordance with [N35] to [N37] and the related standards.

Result:

The individual tests are recorded in the reports /R2/, /R5/, /R10/, /R16/ and /R18/
The test sample worked properly during and after the test.

5.11 Testing of the noise immunity

The strength of the design versus electromagnetic immunity was tested in accordance with [N19] to [N27] and [N30].

Result:

The individual tests are documented in reports /R22/ to /R27/.

The test sample worked properly during and after the test.

5.12 Testing of the noise emission

The emission of noise was tested in accordance with [N28] and [N29].

Result:

The individual tests are documented in reports /R22/ to /R27/.

The test sample worked properly during and after the test.

5.13 Verification of the degree of protection

The degree of protection was tested according to [N38] and [N39].

Result:

The PVED-CLS fulfils the requirement of IPX6, IPX7 and IPX9k
The individual tests are recorded in the report /R6/, /R7/ and /R8/

5.14 Inspection of the technical documentation

The safety manual /D43/, /D134/ and /D157/ was examined to verify the completeness of the technical documentation.

Result:

The results are documented in report /R36/, /R46/ and /R53/.

The technical documentation fulfils the requirements in accordance to [N40].

6 Summary

The test results of clause 5 showed that the ToE, as specified in clause 2.1, fulfils the requirements of clause 3 and the related standards and guidelines.

Digital unterschrieben von Peerasan Supavatanakul
Datum: 2021.11.19 23:13:47 +09'00'

Dr. P. Supavatanakul
Technical Certifier

Digitally signed by Jens Luther
Date: 2021.11.19 15:25:55 +01'00'

J. Luther
Project Manager