Installation guide

Thermostat

RT 14E, RT 101E, RT 107E, RT 123E

017R9518

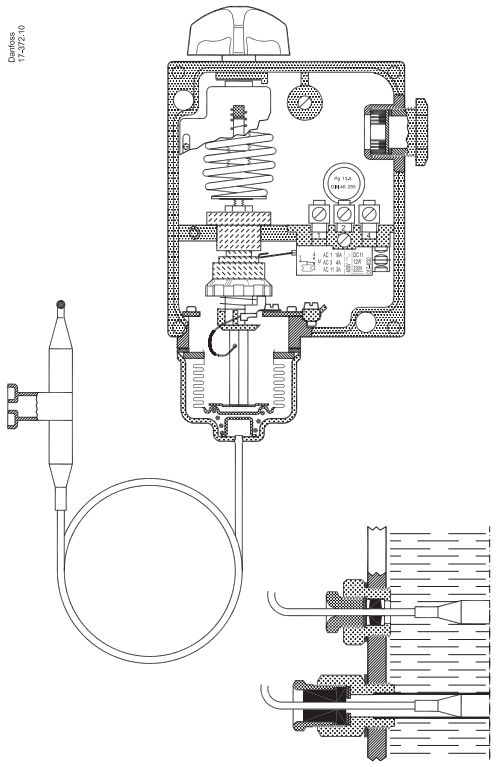

Fig. 1

List of applicable standards:

for ATEX: EN 60079-0:2012+A11:2013; EN 60079-11:2012
for IECEx: IEC 60079-0:2011; IEC 60070-11:2011

Specific conditions of use:

The enclosure fascia has been coated with a layer of stainless steel to prevent the accumulation of electrostatic charge. In order to ensure that there is no accumulation of electrostatic charge on the enclosure, the end user shall ensure that the external metal work of the enclosure is locally bonded to earth. Information on the durability of the coating with regards to use of the equipment is contained within the instruction manual.

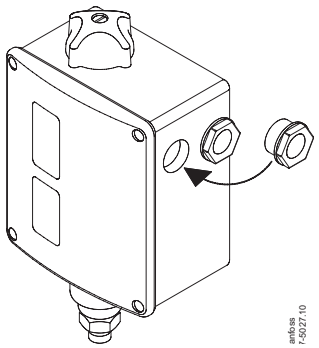

Fig. 2

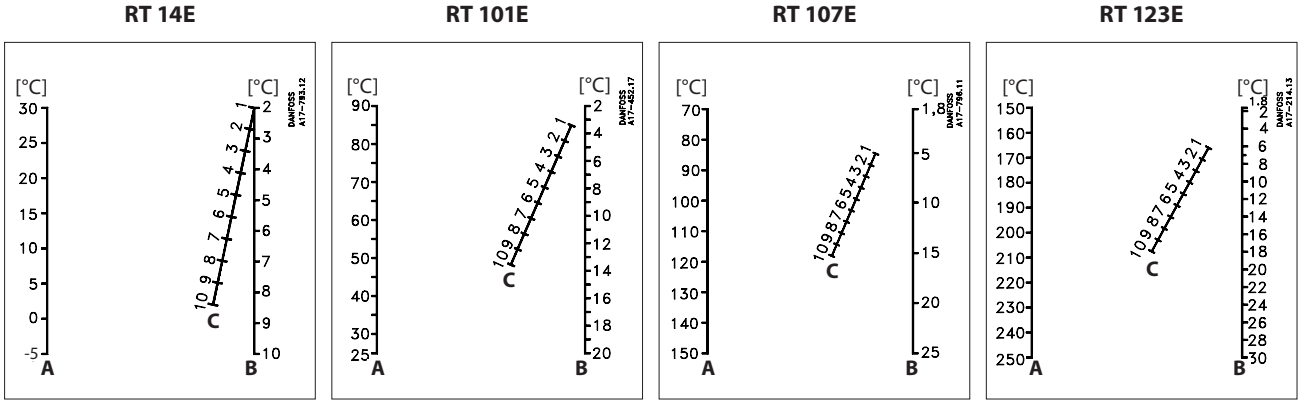

A: Range setting
B: Diffential obtained
C: Differential setting

Fig. 3

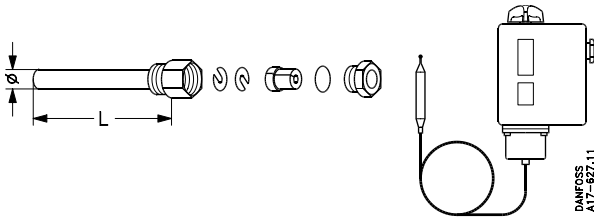

Fig. 4

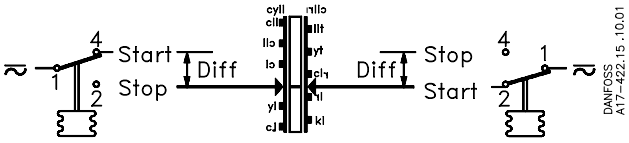

Fig. 5

Product marking

CE 0539 Ex II2G

Ex ia IIC T6...T1 Gb -20 °C ≤ Ta ≤ 65 °C
DEMKO 14 ATEX 1406X
IECEx ULD 14.0013X
U_i = 29 V I_i = 0.5 A P_i = 1 W
C_i = 0.5 nF L_i = 0.2 µH

Temperature class	Process temperature limit [°C]
T1	300
T2	289
T3	194
T4	129
T5	94
T6	79

Technical data

Type	Range [°C]	Max. permissible bulb temperature [°C]
RT 14E	-5 – 30	150
RT 101E	25 – 90	300
RT 107E	70 – 150	215
RT 123E	150 – 250	300

Permissible ambient temperature	-20 – 65 °C
Intrinsically safe specification	U_i = 29 V I_i = 0.5 A P_i = 1 W C_i = 0.5 nF L_i = 0.2 µH
Contact load	max. 100 mA, 30 V AC / DC
	min. 1 mA, 5 V AC / DC
	Must be used with a certified Ex ia barrier satisfying the input parameters.

Installation

A set of Pg13.5 cable gland is attached to the RT in a separate bag. To ensure IP66 (units with automatic reset) or IP54 (units with external reset) grade of RT enclosure it is necessary to assemble this gland as shown in the fig. 2. If this gland is not used with a cable, a metal blinding should be also assembled.
RT units can be fitted in any position. Use the mounting holes (25). With outdoor installation, the unit should be protected against rainfall. The bulb should be fixed to the wall by means of a bulb holding bracket (26). If it is desired to install the bulb in a water or brine tank, this can be done by using either a capillary stuffing box (31) or a bulb pocket (30). If bulb pocket is to be used, for correct bulb fitting see fig. 4.

Electrical connection

See fig. 5.
START = make. STOP = break. DIFF. = differential.
Cable diameter: 6 – 14 mm
The earth terminal (38) should be connected to earth.
Wire dimension: min. 0,75mm^2

Adjustment

Set the thermostat for minimum actuating temperature (range setting). Setting is done by rotating the knob (5), at the same time reading the main scale (9).
The differential is set by rotating the differential adjusting nut (19) according to the nomogram concerned (fig. 3).
Maximum actuating temperature is the sum of the temperature setting and the differential.
Example:
An RT 123E is required to regulate the temperature in a drying oven. Max. temperature 188 °C, min. temperature 180 °C, differential 188 °C - 180 °C =8 °C.
1. Set the thermostat on 180 °C with the knob (5).
2. Set the differential adjusting nut (19) on number 3 which can be found by reading off the nomogram for the RT 123E in fig. 3.

In general, turning the knob automatically moves both the maximum and minimum actuating temperatures (break and make) up or down because of the fixed differential. On the other hand, turning the differential adjusting nut only, alters the maximum actuating temperature.

Safety requirements

1. The refrigeration system must always comply with European Ex installation standard, EN 60079-14, any local directive and legislation as well as any other regulation applying in the area of installation.
2. RT-E temperature control must be used only with reliable means of limiting the voltage and current to prevent sparks between the contact surfaces. The equipment to be used for electrical load limiting must be certified for gas group IIC. Also RT-E thermostat must be installed as a part of IIC electrical installation.
3. Cable and cable entries approved for the application must be used. Cables must not be in contact with sharp edges. The cable must be connected with adequate stress relief in order to prevent that pulling forces can be carried through the cable to the terminal.
4. The cycle frequency of the RT-E switch must be kept as low as possible to prevent fatique failure on the bellows. The vibration level must be kept as low as possible.
5. It is recommended to regularly check the function of the RT-E switch.
6. Only apparatus designed, constructed and released by Danfoss must be used for application concerned. Danfoss can accept no responsibility in case of alterations made on the thermostats or the use of them against the instructions of Danfoss.
7. Any overload of the RT switch must be prevented. Overloaded or damaged apparatus must be exchanged.
8. Only authorised persons, who are certified in installing and maintaining refrigration system may do the installation, maintenance and exchange of the switch. Use only appropriate tools
9. Dispose of the switch in an environmentally-friendly way.
10. RTE switches must be installed in area where is low risk of mechanical damage.
11. Components within the equipment can exceed the enclosure temperature by 1K (1°C). When the media temperature exceeds 80°C, it is the responsibility of the user to ensure that the media temperature does not cause a thermal ignition risk on parts between the media and the switch enclosure. Maximum media temperature on temperature switch with 2m capillary tube is 300°C.
12. Isolation of the intrinsically safe circuit to ground and to the contact mounting screw has been verified through 500VACrms dielectric strength testing, carried out in accordance with IEC 60079-11:2011 section 10.3.
13. Surface of the front cover is sputtered with stainless steel - avoid abrasion.
14. Power must be switched off before maintenance and opening the RT-E.