ENGINEERING
TOMORROW

Data sheet

SVL product range
with butt-weld connection F

The new range of products for Industrial Refrigeration - SVL – is based on the successful modular platform concept from the ICF and ICV valves.

The SVL products with butt-weld connection F offer flexibility, simplicity and efficiency.

The valves are available from a parts program consisting of:
- Valve housing with butt-weld connection F in angle or straightway in different sizes.
- Five different types of function modules:
  Shut-off (SVA-S and SVA-L)
  Hand regulating (REG-S),
  Check & stop (SCA-X),
  Check (CHV-X)
  Strainer (FIA).

The function modules fit the same housing and they all have the same high specification. This makes selection, system design and mounting simple and trouble free.

Features

- One common housing specification makes it very easy to select the right valve for your application and timesaving switch between the functions.
- Approved for –60 °C to +150 °C (–76 °F to +302 °F) and up to 52 bar/754 psi (Refer pressure-temperature range chart on page 3 for more detail).
- Applicable for sub-critical CO_2 and heat pump systems (for selection of valves; please use the chart on page 3).
- The new packing gland features static and dynamic sealing components ensuring a unique, tight and secure seal throughout the operating conditions and covering all approved refrigerants and temperatures in the specification. As a result, the SVL products deliver a smooth opening and closing operation, along with very high reliability.
- The service kit setup makes selection of spare parts very easy.
- The SVL products with Buttweld connection F features coloured seal caps for easy identification of valve function.
  - Red caps for SVA-S/L shut-off valves
  - Yellow caps for REG-SA/SB regulating valves
  - Green caps for SCA-X check & stop valves and CHV-X check valves
  - Gray caps for FIA strainers.
- Matching colour of laser engraved aluminium name tag mounted on valve bonnet.
- Shared spare parts and modular design reduces complexity and stocking costs while allowing for fast and easy service.
- With multiple applications for a given spare part code number, spare parts inventories will be more flexible, and useful.
- If, for some reason, a component has been mounted in the wrong location in the system, it can be quickly solved by replacing the insert.
- SVL housing with connection type F is suitable for butt-weld with stainless steel pipes with small thicknesses (2 and 3mm).

Contents

	Page
Pressure/Temperature range	3
Available SVL product range with butt-weld connection F	3
Shut-off valves SVA-S and SVA-L	4
Features SVA-S and SVA-L	4
Technical data	4
Connections	4
Design	5
Material specification	6
Dimensions and weights	12
Ordering	17
Check & stop valves, SCA-X / Check valves, CHV-X	19
Features SCA-X and CHV-X	19
Technical data	19
Connections	19
Design	20
Computation and selection	21
Material specification	23
Application	25
Dimensions and weights	26
Ordering	29
FIA strainers	31
Features FIA	31
Technical data	31
Connections	31
Design	32
Selection of strainer size	33
Material specification	35
Dimensions and weights	36
Ordering	39
Hand regulating valves REG-SA and REG-SB	41
Features REG-SA and REG-SB	41
Technical data	41
Connections	41
Design	42
Computation and selection	43
Material specification	51
Dimensions and weights	52
Ordering	54

Pressure/Temperature range

Pressure/Temperature range chart for SVL product range with butt-weld connection F

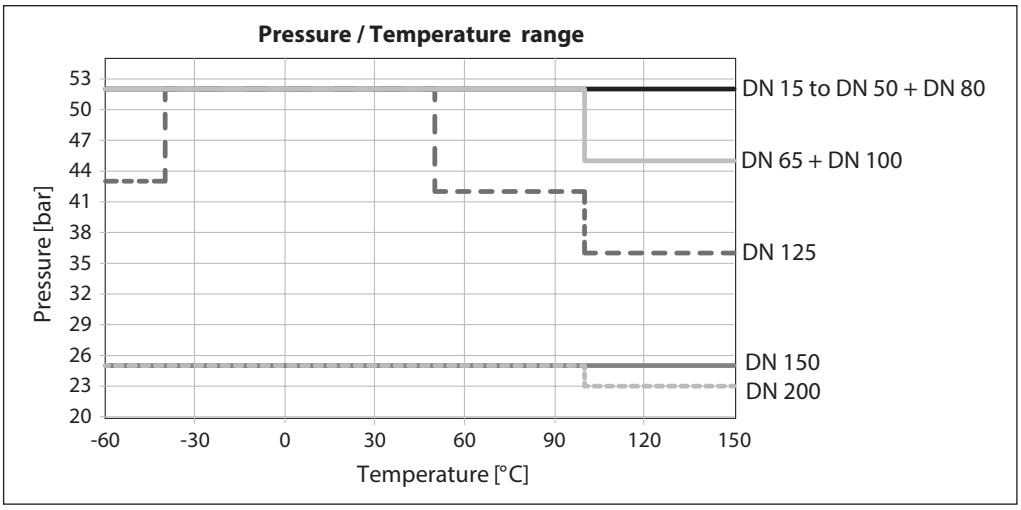

For valve sizes DN 15 to DN 50 and DN 80:
52 bar g (754 psi g) at -60°C to +150°C (-76°F to +302°F).

For valve sizes DN 65 and DN100:
52 bar g (754 psi g) at -60°C to +100°C (-76°F to +212°F),
45 bar g (652 psi g) at +100°C to +150°C (+212°F to +302°F).

For valve size DN 125:
52 bar g (754 psi g) at -40°C to +50°C (-40°F to +122°F)
43 bar g (623 psi g) at -60°C to -40°C (- 76°F to -40°F),
42 bar g (609 psi g) at +50°C to +100°C (+122°F to +212°F),
36 bar g (522 psi g) at +100°C to+150°C (+212°F to +302°F).

For valve size DN 150:
25 bar g (362 psi g) at -60°C to +150°C (-76°F to +302°F).

For valve size DN 200:
25 bar g (362 psi g) at -60°C to +100°C (-76°F to +212°F),
23 bar g (333 psi g) at +100°C to +150°C (+212°F to +302°F).

SVL housings with other connection types (DIN, ANSI, SOC and thread) are approved for a maximum working pressure of 52 bar g (754 psi g) at –60°C to +150°C (–76°F to +302°F) for all sizes.

The reduced pressure in some of the SVL housings with connection type F is caused by the welding onto stainless steel pipes with reduced pipe size.

Available SVL products with butt-weld connection F

Size [DN]	SVA-S				SVA-L				SCA-X	CHV-X	FIA		REG-SA		REG-SB	
	ANG		STR		ANG		STR		ANG	ANG	ANG	STR	ANG	STR	ANG	STR
	H-WHEEL	CAP	H-WHEEL	CAP	H-WHEEL	CAP	H-WHEEL	CAP	CAP	CAP			CAP	CAP	CAP	CAP
15	X	X	X	X	X	X	X	X	X	X	X	X	X	X	X	X
20	X	X	X	X	X	X	X	X	X	X	X	X	X	X	X	X
25	X	X	X	X	X	X	X	X	X	X	X	X	X	X	X	X
32	X	X	X	X	X	X	X	X	X	X	X	X	X	X	X	X
40	X	X	X	X	X	X	X	X	X	X	X	X	X	X	X	X
50	X	X	X	X					X	X	X	X			X	
65	X	X	X	X					X	X	X	X			X	
80	X	X	X	X					X	X	X	X				
100	X	X	X	X					X	X	X	X				
125	X	X	X	X					X	X	X	X				
150	X	X	X	X							X	X				
200	X	X	X	X							X	X				

X = Available

Shut-off valves SVA-S and SVA-L

SVA shut-off valves are available in angleway and straightway versions and with Standard neck (SVA-S) and Long neck (SVA-L)

The shut-off valves are designed to meet all industrial refrigeration application requirements and are designed to give favourable flow characteristics and are easy to dismantle and repair when necessary.

The valve cone is designed to ensure perfect closing and withstand a high system pulsation and vibration, which can be present specifically in the discharge line.

Features SVA-S and SVA-L

- Modular Concept:
  - Each valve housing is available with butt-weld F connection and with several different sizes.
  - Possible to convert SVA-S or SVA-L to any other product in the Flexline™ SVL family (regulating valve, check & stop valve, check valve or strainer) just by replacing the complete top part.
- Fast and easy valve overhaul service. It is easy to replace the top part and no welding is needed.
- Optional accessories:
  - Heavy duty industrial hand wheel for frequent operation.
  - Cap for infrequent operation.
- Available in angleway and straightway versions with Standard neck or Long neck (DN 15 to DN 40) for insulated systems.
- Each valve type is clearly marked with type, size and performance range.
- The valves and caps are prepared for sealing, to prevent operation by unauthorized persons, using a seal wire.
- Internal metal backseating:
  - DN 15 - 65 (½ - 2½ in.)

  Internal PTFE backseating:
  - DN 80 - 200 (3 - 8 in.)
- Can accept flow in both directions.
- Housing and bonnet material is low temperature steel according to requirements of the Pressure Equipment Directive and other international classification authorities.
- Equipped with stainless steel bolts.
- Classification: DNV, CRN, BV, EAC etc.
  To get an updated list of certification on the products please contact your local Danfoss Sales Company.

Technical data

- *Refrigerants*
  Applicable to HCFC, HFC, R717 (Ammonia) and R744 (CO_2). For further information please see installation instruction for SVA.
- *Temperature range*
  –60/+150°C (–76/+302°F).
- *Max. working pressure*
  52 bar g (754 psi g) for DN15 to DN 125
  25 bar g (362 psi g) for DN 150 to DN 200

  For more detail on pressure and temperature range; please see page 3.

Connections

F

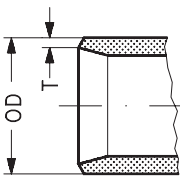

Size mm	Size in.	OD mm	T mm	OD in.	T in.			k_v-angle m³/h	k_v-straight m³/h	C_v-angle USgal/min	C_v-straight USgal/min
Butt-weld connection type F											
15	½	21.3	2	0.839	0.079			7.0	4.9	8.1	5.7
20	¾	26.9	2	1.059	0.079			14.6	10.2	16.9	11.8
25	1	33.7	2	1.327	0.079			24.8	17.4	28.8	20.2
32	1¼	42.4	2	1.669	0.079			42.6	29.8	49.4	34.6
40	1½	48.3	2	1.902	0.079			45.2	31.6	52.4	36.7
50	2	60.3	2	2.37	0.079			80	65	93	76
65	2½	76.1	2	3	0.079			120	97	140	113
80	3	90.9	3	3.579	0.118			182	152	211	176
100	4	116.3	3	4.579	0.118			313	278	363	323
125	5	141.7	3	5.579	0.118			514	470	596	545
150	6	170.3	3	6.705	0.118			785	597	911	693
200	8	221.1	3	8.705	0.118			1168	1024	1355	1188

Design

Connection
- Butt-weld connection "F"
  DN 15 to 65 size: 2mm thick
  DN 80 -200 size: 3 mm thick

Housing
Made of special, cold resistant steel.

Valve cone
The valve cone can be turned on the spindle, thus there will be no friction between the cone and the seat when the valve is opened and closed and the special design will avoid cone spin due to pulsation and vibration when the valve is in open position. A teflon tightening ring provides perfect sealing with minimum closing force.

Spindle
Made of polished stainless steel, ideal for leap seal sealing.

Packing gland
The low temperature packing gland ensures a perfect tightness in the range: –60/+150°C (–76/+302°F). The packing glands are equipped with a scraper ring to prevent penetration of dirt and ice into the packing gland.

Installation
It is recommended that the valves be installed in the direction of flow indicated by the arrow on the valve body. The valve can be installed in the opposite direction but this slightly reduces the k_v-value (C_v-value).

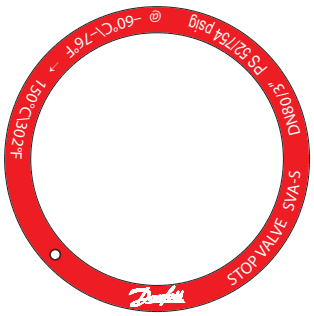

Example of Marking Ring

The valve is designed to withstand high internal pressure. However, the piping system in general should be designed to avoid liquid traps and reduce the risk of hydraulic pressure caused by thermal expansion.

For further information refer to installation instructions for SVA.

Pressure Equipment Directive (PED)
SVA valves are approved according to the European standard specified in the Pressure Equipment Directive and are CE marked.
For further details / restrictions - see Installation Instruction.

SVA			
Nominal bore	DN≤ 25 mm (1 in.)	DN32-80 mm (1¼ - 3 in.)	DN100 - 200 mm (4-8 in.)
Classified for	Fluid group I		
Category	Article 3, paragraph 3	II	III

Material specification

SVA-S 15-20 (1/2 - 3/4 in.)

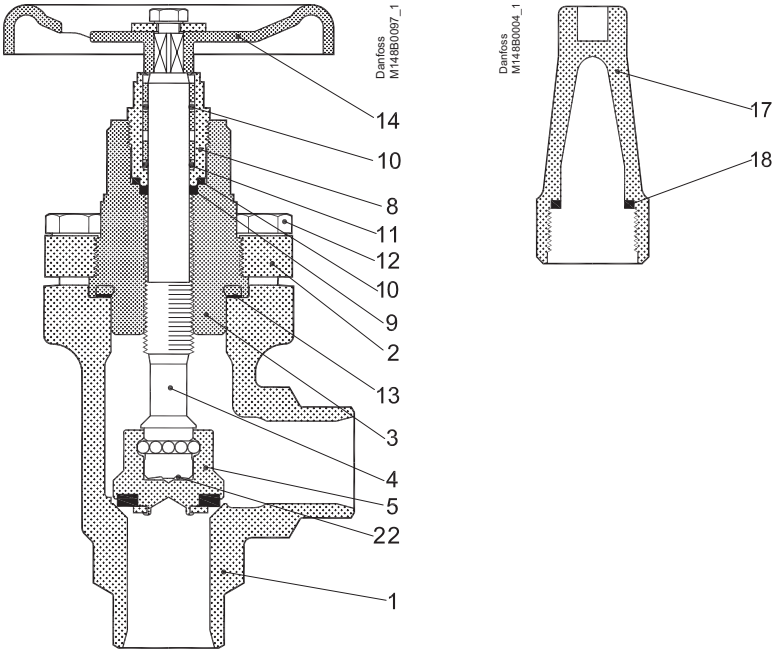

No.	Part	Material	EN	ISO	ASTM
1	Housing	Steel	G20Mn5QT, 10213-3 ---------- P285QH+QT, 10222-4		LCC, A352 ---------- LF2, A350
2	Bonnet, Flange	Steel	G20Mn5QT, 10213-3 ---------- P285QH+QT, 10222-4 ---------- P275NL, 10028-3		LCC, A352 ---------- LF2, A350
3	Bonnet, Insert	Steel	11SMn30 10087	Type 2 R 683/9	AISI 1213
4	Spindle	Stainless steel	X8CrNiS18-9 10088	Type 17 683/13	AISI 303
5	Cone	Steel	11SMn30 10087	Type 2 R 683/9	AISI 1213
8	Packing gland	Stainless steel	X8CrNiS18-9 10088	Type 17 683/13	AISI 303
9	Packing washer	Aluminium			
10	O-ring	Cloroprene (Neoprene)			
11	Spring loaded Teflon ring	PTFE			
12	Bolts	Stainless steel	A2-70	A2-70	Type 308
13	Gasket	Fiber, Non-asbestos			
14	Handwheel	Steel			
17	Cap	Aluminium			
18	Gasket for cap	Nylon			
19	Locking nut	Steel			
20	Screw	Steel			
22	Disk spring	Steel			

Material specification

SVA-S 25-40 (1 - 1½ in.)

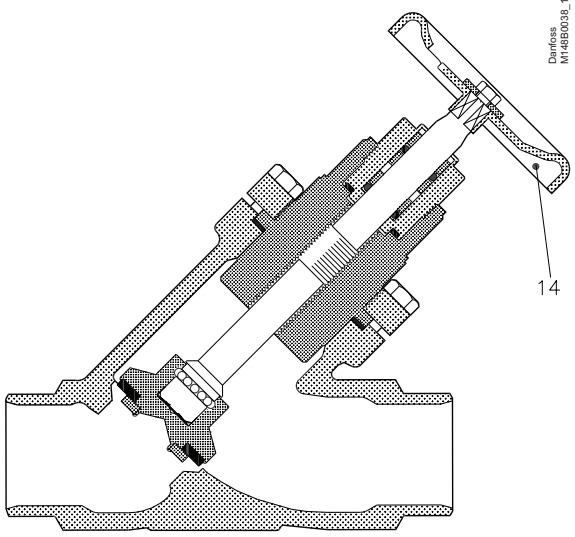

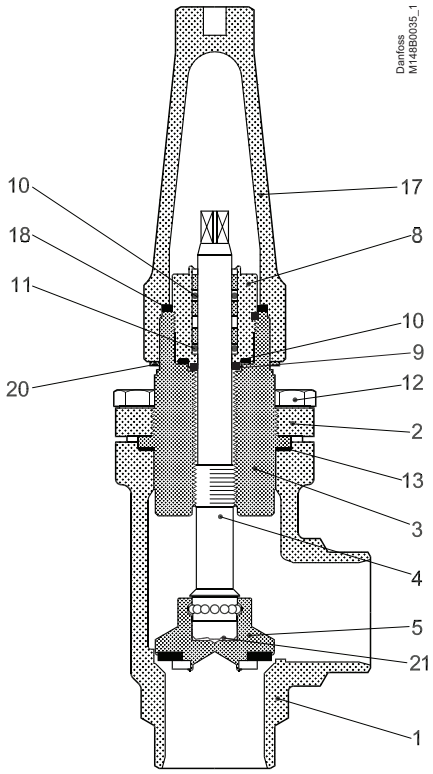

No.	Part	Material	EN	ISO	ASTM
1	Housing	Steel	G20Mn5QT, 10213-3 ---------- P285QH+QT, 10222-4		LCC, A352 ---------- LF2, A350
2	Bonnet, Flange	Steel	G20Mn5QT, 10213-3 ---------- P285QH+QT, 10222-4 ---------- P275NL, 10028-3		LCC, A352 ---------- LF2, A350
3	Bonnet, Insert	Steel	11SMn30 10087	Type 2 R 683/9	AISI 1213
4	Spindle	Stainless steel	X8CrNiS18-9 10088	Type 17 683/13	AISI 303
5	Cone	Steel	11SMn30 10087	Type 2 R 683/9	AISI 1213
8	Packing gland	Stainless steel	X8CrNiS18-9 10088	Type 17 683/13	AISI 303
9	Packing washer	Aluminium			
10	O-ring	Cloroprene (Neoprene)			
11	Spring loaded Teflon ring	PTFE			
12	Bolts	Stainless steel	A2-70	A2-70	Type 308
13	Gasket	Fiber, Non-asbestos			
14	Handwheel	Steel			
17	Cap	Aluminium			
18	Gasket for cap	Nylon			
20	Identification ring	Stainless steel			
21	Disk spring	Steel			

Material specification

SVA-L 15 - 40 (½ - 1½ in.)

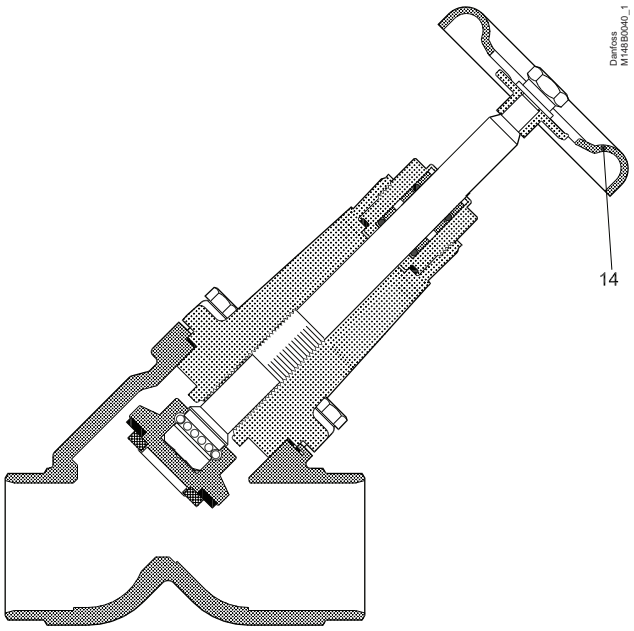

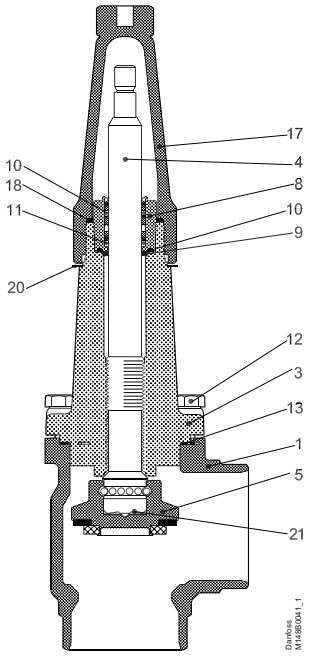

No.	Part	Material	EN	ISO	ASTM
1	Housing	Steel	G20Mn5QT, 10213-3 ---------- P285QH+QT, 10222-4		LCC, A352 ---------- LF2, A350
3	Valve bonnet	Steel	G20Mn5QT, 10213-3 ---------- P285QH+QT, 10222-4		LCC, A352 ---------- LF2, A350
4	Spindle	Stainless steel	X8CrNiS18-9 10088	Type 17 683/13	AISI 303
5	Cone	Steel	11SMn30 10087	Type 2 R 683/9	AISI 1213
8	Packing gland	Stainless steel	X8CrNiS18-9 10088	Type 17 683/13	AISI 303
9	Packing washer	Aluminium			
10	O-ring	Cloroprene (Neoprene)			
11	Spring loaded Teflon ring	PTFE			
12	Bolts	Stainless steel	A2-70	A2-70	Type 308
13	Gasket	Fiber, Non-asbestos			
14	Hand wheel	Steel			
17	Cap	Aluminium			
18	Gasket for cap	Nylon (PA6)			
20	Identification ring	Stainless steel			
21	Disk spring	Steel			

Material specification

SVA-S 50-65 (2 - 2½ in.)

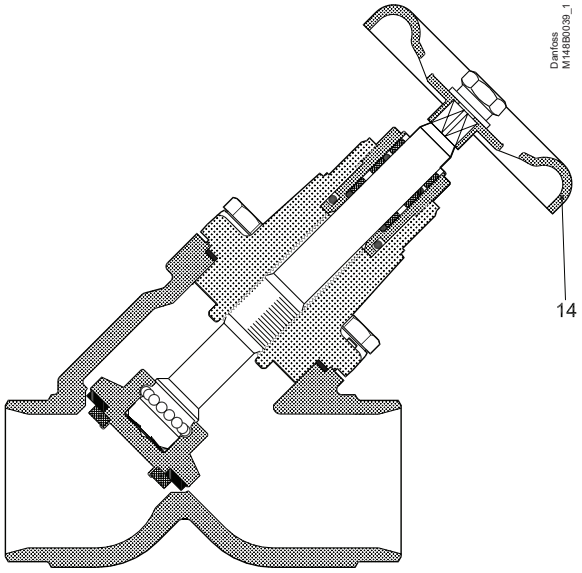

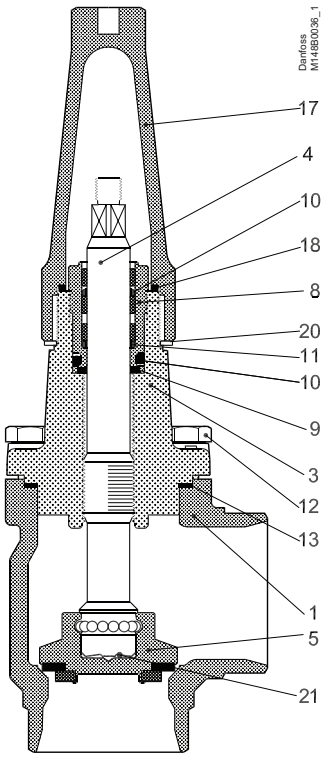

No.	Part	Material	EN	ISO	ASTM
1	Housing	Steel	G20Mn5QT, 10213-3 ---------- P285QH+QT, 10222-4		LCC, A352 ---------- LF2, A350
3	Valve bonnet	Steel	G20Mn5QT, 10213-3 ---------- P285QH+QT, 10222-4		LCC, A352 ---------- LF2, A350
4	Spindle	Stainless steel	X8CrNiS18-9 10088	Type 17 683/13	AISI 303
5	Cone	Steel	11SMn30 10087	Type 2 R 683/9	AISI 1213
8	Packing gland	Stainless steel	X8CrNiS18-9 10088	Type 17 683/13	AISI 303
9	Packing washer	Aluminium			
10	O-ring	Cloroprene (Neoprene)			
11	Spring loaded Teflon ring	PTFE			
12	Bolts	Stainless steel	A2-70	A2-70	Type 308
13	Gasket	Fiber, Non-asbestos			
14	Handwheel	Steel			
17	Cap	Aluminium			
18	Gasket for cap	Nylon			
19	Locking nut	Steel			
20	Identification ring	Stainless steel			
21	Disk spring	Steel			

Material specification

SVA-S 80 - 150 (3 - 6 in.)

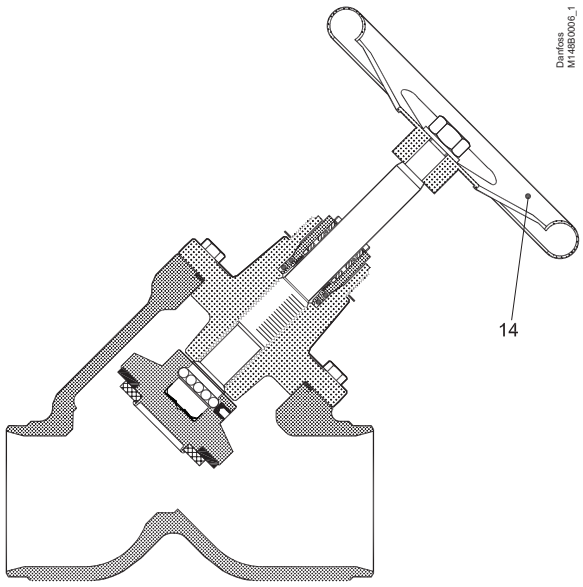

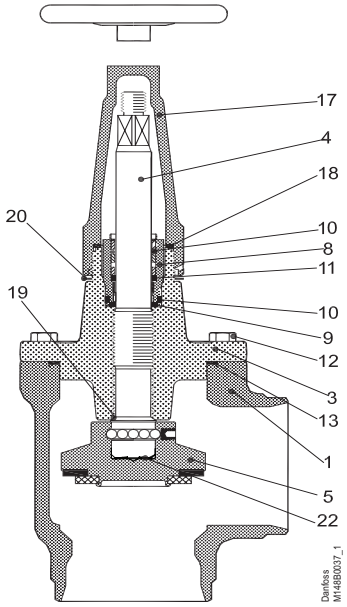

No.	Part	Material	EN	ISO	ASTM
1	Housing	Steel	G20Mn5QT 10213-3		LCC A352
3	Valve bonnet	Steel	G20Mn5QT, 10213-3 ---------- P285QH+QT, 10222-4		LCC, A352 ---------- LF2, A350
4	Spindle	Stainless steel	X5CrNi18-10 10088	Type 11, R 683/13	AISI 304, A276
5	Cone Cone seal	Steel Teflon (PTFE)	11SMn30 10087	Type 2, R 683/9	AISI 1213
8	Packing gland	Stainless steel	X8CrNiS18-9 10088	Type 17 R 683/13	AISI 303
9	Packing washer	Aluminium			
10	O-ring	Cloroprene (Neoprene)			
11	Spring loaded Teflon ring	PTFE			
12	Bolts	Stainless steel	A2-70	A2-70	Type 308
13	Gasket	Fiber, Non-asbestos			
14	Hand wheel	Steel			
17	Cap	Aluminium			
18	Gasket for cap	Nylon (PA 6)			
19	Soft backseat	Teflon (PTFE)			
20	Identification ring	Stainless steel			
22	Disk spring	Steel			

Material specification

SVA-S 200 (8 in.)

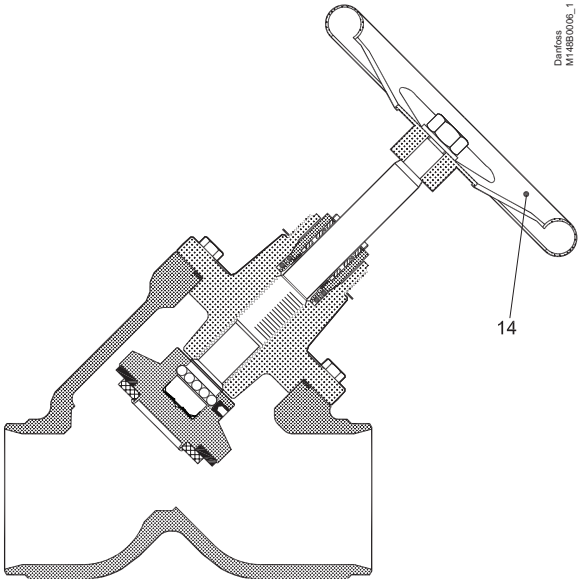

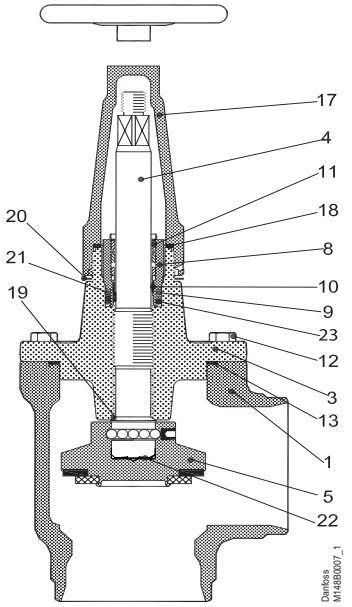

No.	Part	Material	EN	ISO	ASTM
1	Housing	Steel	G20Mn5QT 10213-3		LCC A352
3	Valve bonnet	Steel	G20Mn5QT, 10213-3 ---------- P285QH+QT, 10222-4		LCC, A352 ---------- LF2, A350
4	Spindle	Stainless steel	X5CrNi18-10 10088	Type 11, R 683/13	AISI 304, A276
5	Cone Cone seal	Steel Teflon (PTFE)	11SMn30 10087	Type 2, R 683/9	AISI 1213
8	Packing gland	Stainless steel	X8CrNiS18-9 10088	Type 17 R 683/13	AISI 303
9	O-ring	Cloroprene (Neoprene)			
10	Spring loaded Teflon ring	PTFE			
11	O-ring	Cloroprene (Neoprene)			
12	Bolts	Stainless steel	A2-70	A2-70	Type 308
13	Gasket	Fiber, Non-asbestos			
14	Hand wheel	Steel			
15	Washer	Stainless steel			
16	Nut	Stainless steel			
17	Cap	Aluminium			
18	Gasket for cap	Nylon (PA 6)			
19	Soft backseat	Teflon (PTFE)			
20	Identification ring	Stainless steel			
21	Wear ring	Teflon (PTFE)			
22	Disk spring	Steel			
23	O-ring	PTFE/Cloroprene (Neoprene)			

Dimensions and weights

SVA 15 - 40 (½ - 1½ in.) in angleway version with cap / hand wheel

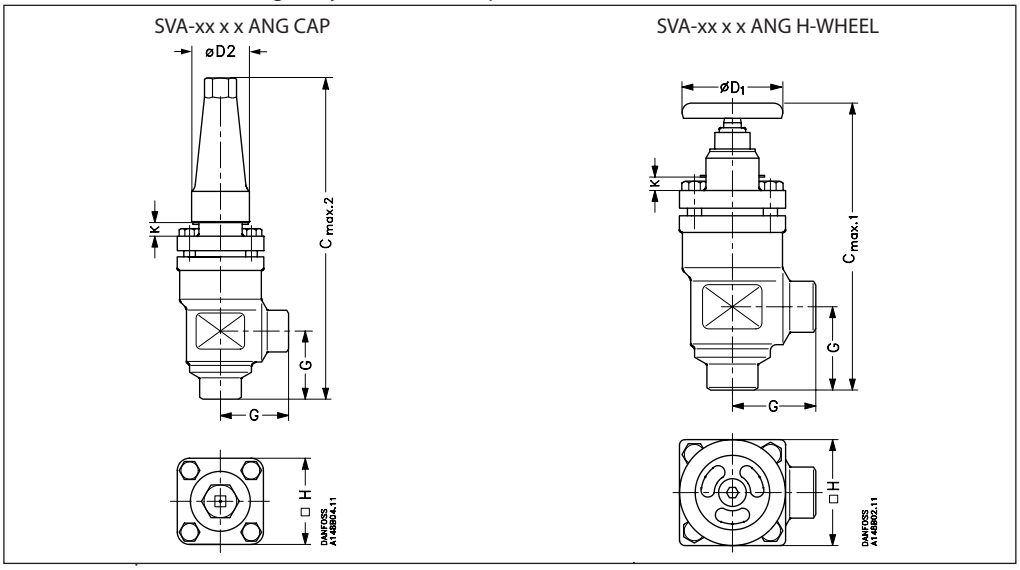

Valve size		K		$C_{max.1}$	$C_{max.2}$	G		$ØD_1$	$ØD_2$	□H		Weight
SVA-S												
SVA 15 - 20	mm	4		178	189	45		60	38	60		1.4 kg
SVA (½ - ¾)	in.	0.16		7.00	7.44	1.77		2.36	1.5	2.36		3.1 lb
SVA 25 - 40	mm	12		234	268	55		80	50	70		2.4 kg
SVA (1 - 1½)	in.	0.47		9.21	10.55	2.17		3.15	1.97	2.76		5.3 lb
SVA-L												
SVA 15 - 20	mm	63		237	248	45		60	38	60		1.4 kg
SVA (½ - ¾)	in.	2.48		9.33	9.76	1.77		2.36	1.5	2.36		3.1 lb
SVA 25 - 40	mm	74		296	330	55		80	50	70		2.4 kg
SVA (1 - 1½)	in.	2.91		11.65	12.99	2.17		3.15	1.97	2.76		5.3 lb

Specified weights are approximate values only.

Dimensions and weights

SVA 15 - 40 (½ - 1½ in.) straightway version with cap / hand wheel

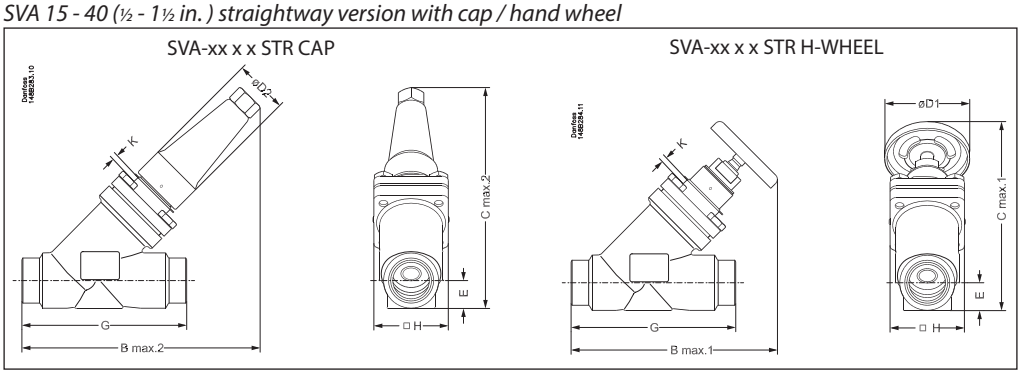

Valve size		K	$C_{max.1}$	$C_{max.2}$	$B_{max.1}$	$B_{max.2}$	E	G	$ØD_1$	$ØD_2$	□H	Weight
SVA-S												
SVA 15 - 20	mm	4	146	141	160	156	20	120	60	38	60	2.0 kg
SVA (½ - ¾)	in.	0.16	5.74	5.55	6.30	6.14	0.79	4.72	2.36	1.50	2.36	4.4 lb
SVA 25 - 40	mm	12	199	208	212	222	26	155	80	50	70	3.0 kg
SVA (1 - 1½)	in.	0.47	7.83	8.19	8.35	8.74	1.02	6.10	3.15	1.97	2.76	6.6 lb
SVA-L												
SVA 15 - 20	mm	63	188	184	202	198	20	120	60	38	60	2.0 kg
SVA (½ - ¾)	in.	2.48	7.40	7.24	7.95	7.80	0.79	4.72	2.36	1.50	2.36	4.4 lb
SVA 25 - 40	mm	74	243	252	256	265	26	155	80	50	70	3.0 kg
SVA (1 - 1½)	in.	2.91	9.57	9.92	10.08	10.43	1.02	6.10	3.15	1.97	2.76	6.6 lb

Specified weights are approximate values only.

Dimensions and weights

SVA 50 - 65 (2 - 2½ in.) in angleway version with cap / hand wheel

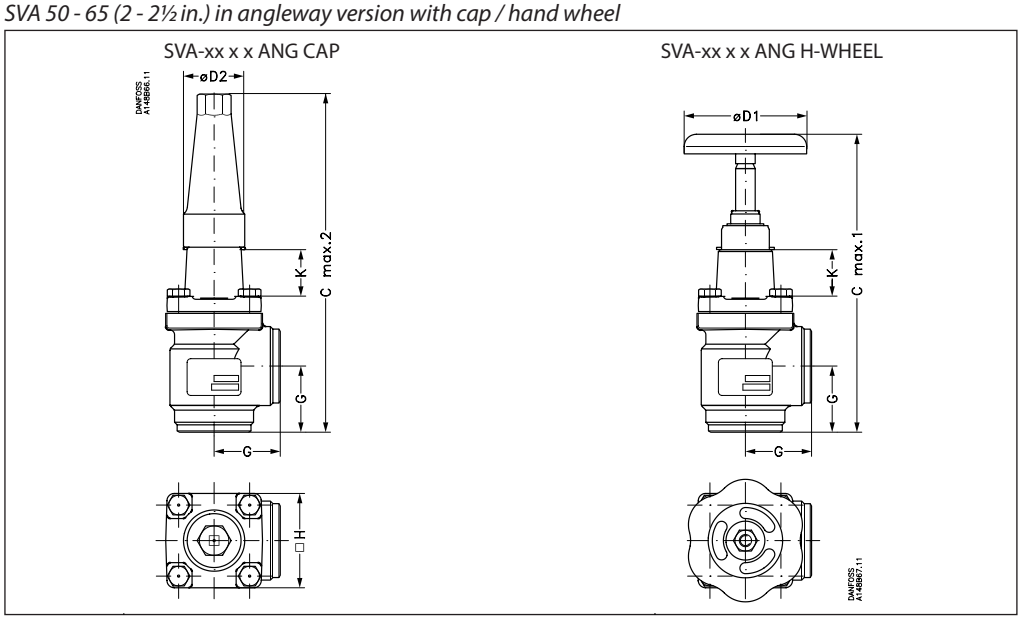

Valve size		K		$C_{max.1}$	$C_{max.2}$		G	$ØD_1$	$ØD_2$	□H		Weight
SVA-S												
SVA 50	mm	70		284	315		60	100	50	77		3.2 kg
SVA (2)	in.	2.76		11.18	12.40		2.36	3.94	1.97	3.03		7.1 lb
SVA 65	mm	70		310	335		70	100	50	90		4.8 kg
SVA (2½)	in.	2.76		12.20	13.19		2.76	3.94	1.97	3.54		10.6 lb

Specified weights are approximate values only.

Dimensions and weights

SVA 50 - 65 (2 - 2½ in.) in straightway version with cap / hand wheel

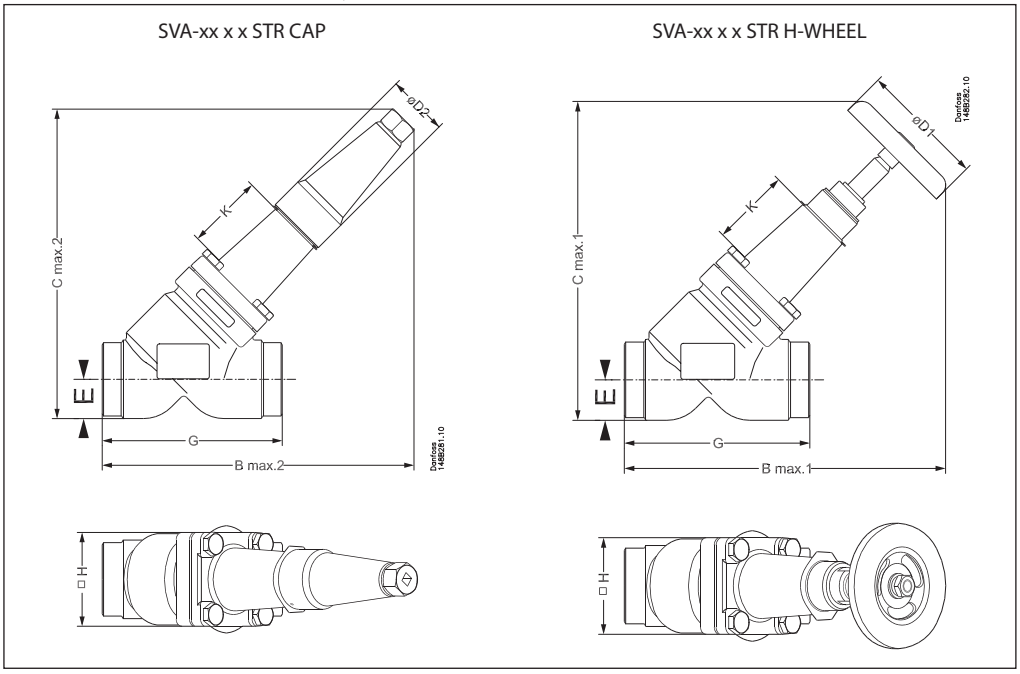

Valve size		K	$B_{max.1}$	$B_{max.2}$	$C_{max.1}$	$C_{max.2}$	E	G	$ØD_1$	$ØD_2$	□H	Weight
SVA-S												
SVA 50	mm	70	259	259	257	257	32	148	100	50	77	4.2 kg
SVA (2)	in.	2.76	10.20	10.20	10.12	10.12	1.26	5.83	3.94	1.97	3.03	9.3 lb
SVA 65	mm	70	284	280	284	280	40	176	100	50	90	6.3 kg
SVA (2½)	in.	2.76	11.18	11.02	11.18	11.02	1.57	6.93	3.94	1.97	3.54	13.9 lb

Specified weights are approximate values only.

Dimensions and weights

SVA 80 - 200 (3 - 8 in.) angleway version with cap / hand wheel

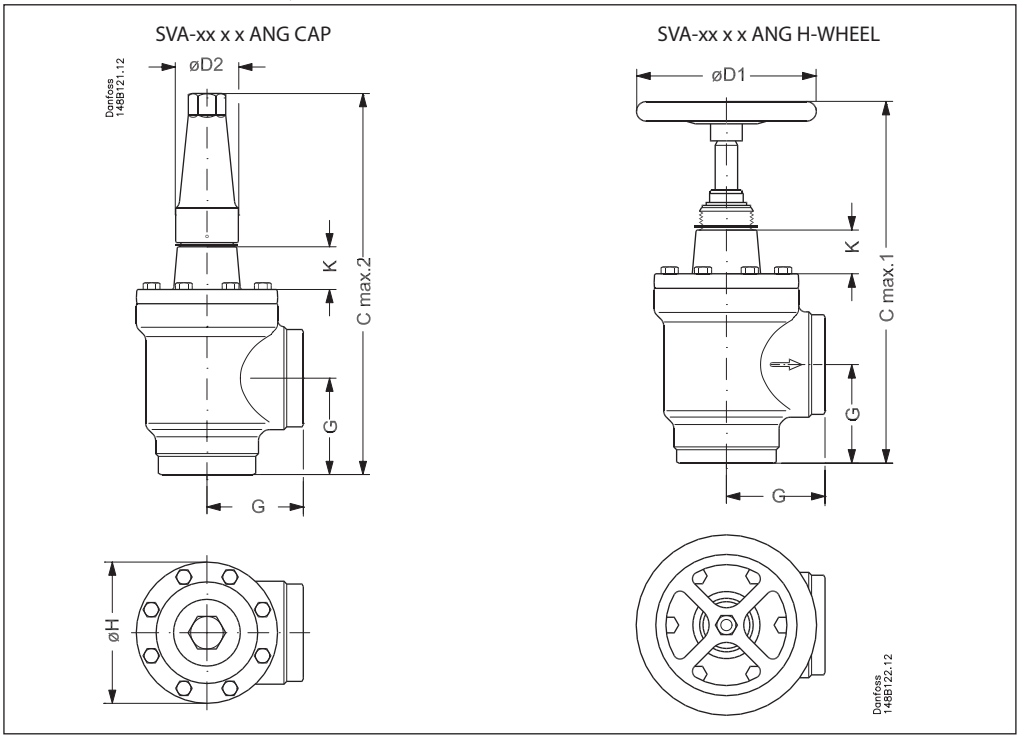

Valve size		K		$C_{max.1}$	$C_{max.2}$		G	$ØD_1$	$ØD_2$		ØH	Weight
SVA-S												
SVA 80	mm	76		373	388		90	200	58		129	9.7 kg
SVA (3)	in.	3.00		14.69	15.28		3.54	7.87	2.28		5.08	21.4 lb
SVA 100	mm	90		432	437		106	250	58		156	15.3 kg
SVA (4)	in.	3.54		17.00	17.20		4.17	9.84	2.28		6.14	33.7 lb
SVA 125	mm	90		517	533		128	315	74		193	28.1 kg
SVA (5)	in.	3.54		20.35	20.98		5.04	12.40	2.91		7.60	61.9 lb
SVA 150	mm	90		564	568		145	315	74		219	39.7 kg
SVA (6)	in.	3.54		22.20	22.36		5.71	12.40	2.91		8.62	87.5 lb
SVA 200	mm	90		675	678		180	400	86		276	79.5 kg
SVA (8)	in.	3.54		26.57	26.69		7.09	15.75	3.39		10.87	175.3 lb

Specified weights are approximate values only.

Dimensions and weights

SVA 80 - 200 (3 - 8 in.) straightway version with cap / hand wheel

SVA-xx x x STR CAP

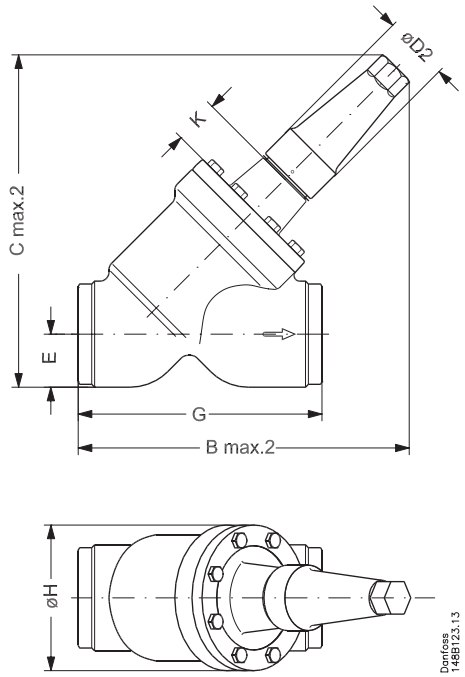

SVA-xx x x STR H-WHEEL

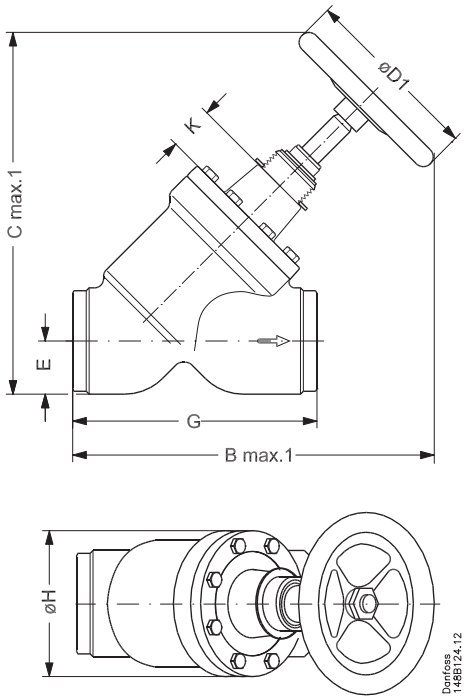

Valve size		K	$B_{max.1}$	$B_{max.2}$	$C_{max.1}$	$C_{max.2}$	E	G	$ØD_1$	$ØD_2$	ØH	Weight
SVA-S												
SVA 80	mm	76	365	321	367	322	48	216	200	58	129	10.9 kg
SVA (3)	in.	3.00	14.37	12.64	14.45	12.72	1.89	8.50	7.87	2.28	5.08	24.0 lb
SVA 100	mm	90	435	367	443	375	60	264	250	58	156	18.2 kg
SVA (4)	in.	3.54	17.13	14.45	17.44	14.76	2.36	10.39	9.84	2.28	6.14	40.1 lb
SVA 125	mm	90	526	444	538	456	74	322	315	74	193	32.8 kg
SVA (5)	in.	3.54	20.71	17.48	21.18	17.95	2.91	12.68	12.40	2.91	7.60	72.3 lb
SVA 150	mm	90	572	483	594	505	91	370	315	74	219	60.0 kg
SVA (6)	in.	3.54	22.52	19.02	23.39	19.88	3.58	14.57	12.40	2.91	8.62	132.3 lb
SVA 200	mm	90	692	579	726	613	117	464	400	86	276	111.5 kg
SVA (8)	in.	3.54	27.24	22.80	28.58	24.13	4.61	18.27	15.75	3.39	10.87	245.8 lb

Specified weights are approximate values only.

Ordering

Available connection sizes

SVA-**S**:
The **S** means **S**tandard bonnet length (sizes from DN50 to DN200 are insulation friendly)

SVA-**L**:
The **L** means **L**ong bonnet length (insulation friendly)

Size	SVA-S	SVA-L
15	x	x
20	x	x
25	x	x
32	x	x
40	x	x
50	x	
65	x	
80	x	
100	x	
125	x	
150	x	

Please note that the type codes only serve to identify the valves, some of which may not form part of the standard product range. For further information please contact your local Danfoss Sales Company.

Type codes

Valve type	**SVA**	Shut-off valve	
Nominal size in mm			Available connections
			F
(valve size measured on the connection diameter)	**15**	DN 15 (½)	x
	20	DN 20 (¾)	x
	25	DN 25 (1)	x
	32	DN 32 (1¼)	x
	40	DN 40 (1½)	x
	50	DN 50 (2)	x
	65	DN 65 (2½)	x
	80	DN 80 (3)	x
	100	DN 100 (4)	x
	125	DN 125 (5)	x
	150	DN 150 (6)	x
	200	DN 200 (8)	x
Connections	**F**	Butt-weld connection: with 2/3 mm thick end connection	
Valve housing	**ANG** **STR**	Angle flow Straight flow	
Other equipment	**H-WHEEL** **CAP**	Hand wheel Cap	

Ordering SVA-S complete valves

Example:
SVA-S 200 F angleway with hand wheel = **148B6435**

ANG = Angleway
STR = Straightway
CAP = Cap
H-WHEEL = Hand wheel

SVA-S Angleway

Size		Type	MWP		Code number
mm	in.		bar	psi	
Butt-weld connection F					
150	6	SVA-S 150 F ANG H-WHEEL	25	362	**148B6434**
150	6	SVA-S 150 F ANG CAP	25	362	**148B6436**
200	8	SVA-S 200 F ANG H-WHEEL	25	362	**148B6435**
200	8	SVA-S 200 F ANG CAP	25	362	**148B6437**

SVA-S Straightway

Size		Type	MWP		Code number
mm	in.		bar	psi	
Butt-weld connection F					
150	6	SVA-S 150 F STR H-WHEEL	25	362	**148B6438**
150	6	SVA-S 150 F STR CAP	25	362	**148B6440**
200	8	SVA-S 200 F STR H-WHEEL	25	362	**148B6439**
200	8	SVA-S 200 F STR CAP	25	362	**148B6441**

Important!
Where products need to be certified according to specific certification societies or where higher pressures are required, the relevant information should be included at the time of order.

Ordering SVA-S from the parts programme

Example
(select from table 1 and 2)

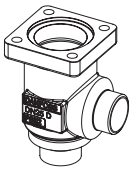

Valve housing, size 25 (1 in.), butt weld F, angleway,
148B6416
Table 1

+

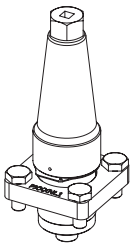

Top part, SVA-S size 25 (1 in.) with cap
148B5476
Table 2

=

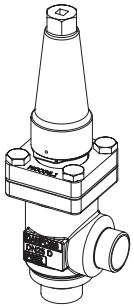

Table 1
SVL valve housings w/different connections

Please note:
Not all sizes available for SVA-L - see table 2.

		DN 15-65 mm (½ - 2½ in.)	*DN 80-125 mm (3 - 5 in.)*
		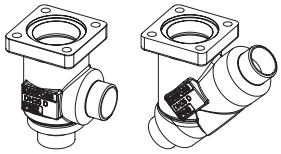	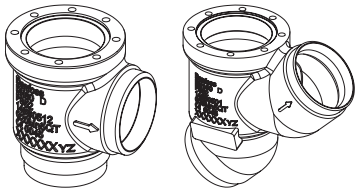
Sizes [DN]		**Valve Housing SVL**	
		Butt weld F	
mm	**in.**	**ANG**	**STR**
15	½	**148B6414**	**148B6424**
20	¾	**148B6415**	**148B6425**
25	1	**148B6416**	**148B6426**
32	1¼	**148B6417**	**148B6427**
40	1½	**148B6418**	**148B6428**
50	2	**148B6419**	**148B6429**
65	2½	**148B6420**	**148B6430**
80	3	**148B6421**	**148B6431**
100	4	**148B6422**	**148B6432**
125	5	**148B6423**	**148B6433**

Table 2
SVA complete top part including gaskets and bolts

		SVA-S 15-65 with cap	SVA-S 15-65 with h-wheel	SVA-S 80-125 with cap	SVA-S 80-125 with h-wheel	SVA-L 15-40 with cap	SVA-L 15-40 with h-wheel
		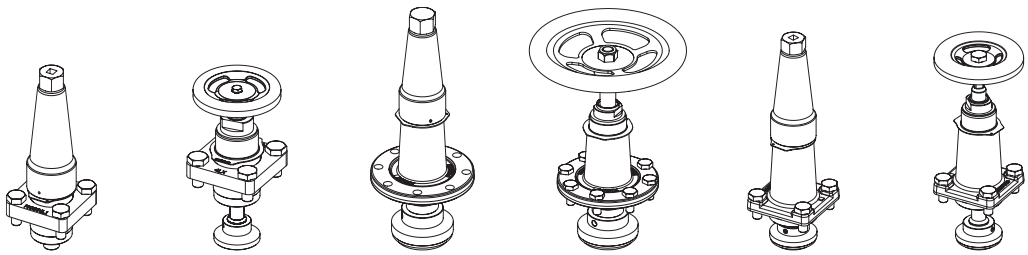					
Sizes [DN]		**Complete top part**					
mm	**in.**	**SVA-S CAP**	**SVA-S H-WHEEL**	**SVA-L CAP**	**SVA-L H-WHEEL**		
15	½	**148B5276**	**148B5277**	**148B5278**	**148B5279**		
20	¾						
25	1	**148B5476**	**148B5477**	**148B5478**	**148B5479**		
32	1¼						
40	1½						
50	2	**148B5728**	**148B5729**				
65	2½	**148B5822**	**148B5823**				
80	3	**148B5916**	**148B5917**				
100	4	**148B6012**	**148B6018**				
125	5	**148B6116**	**148B6117**				

Check & stop valves, SCA-X
Check valves, CHV-X

SCA-X are check valves with a built-in stop valve function. CHV-X are check valves only. SCA-X/ CHV-X are available in angleway versions.

The valves are designed to open at very low differential pressures, allow favourable flow conditions and are easy to disassemble for inspection and service.

The SCA-X is equipped with vented cap and has internal backseating enabling the spindle seal to be replaced whilst the valve still under pressure.

Laser cut V-ports provide excellent opening characteristics (SCA-X/CHV-X 50-125).

The valve cone has a built-in flexibility to ensure a precise and tight closing towards the valve seat.

A well balanced dampening effect between the piston and the cylinder gives an optimal protection during low loads and against pulsations.

Features
SCA-X and CHV-X

- Modular Concept:
  - Each valve housing is available with butt-weld F connection and in several different sizes.
  - Possible to convert SCA-X or CHV-X to any other product in the FlexlineTM SVL family (regulating valve, shut-off valve or strainer) just by replacing the complete top part.
- Fast and easy valve overhaul service. It is easy to replace the top part and no welding is needed.
- Designed to open at a very low differential pressure of 0.04 bar (0.58 psig).
- Designed with a built-in damping chamber preventing valve flutter in case of low refrigerant velocity and/or low density.
- Each valve is clearly marked with type, size and performance range.
- Easy to disassemble for inspection and service.
- Internal backseating enables replacement of the spindle seal whilst the valve is active, i.e. under pressure.
- Optimal flow characteristics ensuring quick opening to the fully open position.
- Protection against pulsation by built-in damping facility.
- Housing and bonnet material is low temperature steel according to requirements of the Pressure Equipment Directive and other international classification authorities.
- Equipped with Stainless steel bolts.
- Classification: DNV, CRN, BV, EAC etc.
  To get an updated list of certification on the products please contact your local Danfoss Sales Company.

Technical data

- *Refrigerants*
  Applicable to HCFC, HFC, R717 (Ammonia) and R744 (CO2). For further information refer to the product instruction for SCA-X/CHV-X.
- *Temperature range*
  –60/+150°C (–76/+302°F).
- *Max. working pressure*
  52 bar g (754 psi g)

  For more detail on pressure and temperature range; please see page 3.

Connections

F

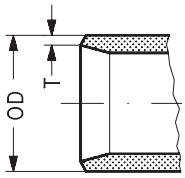

Butt-weld connection type F

Size mm	Size in.	OD mm	T mm	OD in.	T in.			k_v-angle m^3/h		C_v-angle USgal/min	
15	½	21.3	2	0.839	0.079			8.0		9.3	
20	¾	26.9	2	1.059	0.079			10.0		11.6	
25	1	33.7	2	1.327	0.079			24.0		27.8	
32	1¼	42.4	2	1.669	0.079			30.0		34.8	
40	1½	48.3	2	1.902	0.079			30.0		34.8	
50	2	60.3	2	2.37	0.079			45		53	
65	2½	76.1	2	3	0.079			72		85	
80	3	90.9	3	3.579	0.118			103		129	
100	4	116.3	3	4.579	0.118			196		232	
125	5	141.7	3	5.579	0.118			301		356	

Design

Connections
Available with the following connections:

- Butt-weld connection "F"
  DN 15 to 65 size: 2mm thick
  DN 80 -125 size: 3 mm thick

Housing
The housing is made from special, cold resistant steel.

Valve cone
Valve cone with built in metallic stop - prevents damage to teflon ring in case of overtightening.

Damping chamber
The chamber is filled with refrigerants (gas or liquid), which provides a damping effect when the valve opens and closes.

Spindle (SCA-X)
Made of polished stainless steel, which is ideal for O-ring sealing.

Packing Gland (SCA-X)
The "full temperature range" packing gland is the standard for the entire SVL platform.

This ensures perfect tightness throughout the whole temperature range:
–60/+150°C (–76/+302°F).

Installation
The valve must be mounted vertically with the cone downwards.

The valve is designed to resist very high internal pressure. However, the piping system in general should be designed to avoid liquid traps and reduce the risk of hydraulic pressure caused by thermal expansion.

For further information refer to installation instructions for SCA-X/CHV-X.

If cold refrigeration oil having low viscosity enters and settles in the damping chamber, problems with the check valve may arise. Consequently, it may be necessary to modify the valve for more viscous liquids by enlarging the hole to the damping chamber.

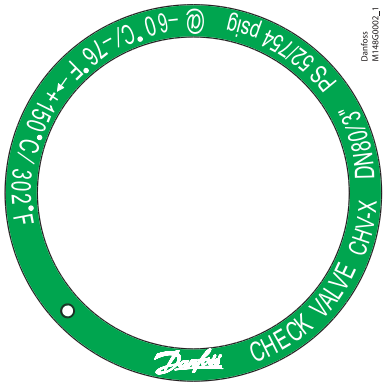

Example of marking ring, CHV-X

Pressure Equipment Directive (PED)
The SCA-X/CHV-X valves are approved according to the European standard specified in the Pressure Equipment Directive and are CE marked. For further details / restrictions - see the product instruction.

SCA-X/CHV-X valves			
Nominal bore	DN = < 25 mm (1 in.)	DN32-80 mm (1¼ - 3 in.)	DN100 - 125 mm (4 - 5 in.)
Classified for	Fluid group I		
Category	Article 3, paragraph 3	II	III

Computation and selection

Introduction

When dimensioning SCA-X/CHV-X, it is important to select a valve that is best suited to all operating conditions. Therefore, it is necessary to consider both the nominal and part load working conditions.

The SCA-X/CHV-X valve can be calculated in two ways:
– Using the tables below.
– Using DIRcalc version 1.14 or higher.

Example

SI-Units

Assumed working conditions:
Maximum flow $\dot{V}$ = 1000 m³/h
Density ρ = 3.0 kg/m³
Minimum part load = 33%

Used expressions:
Recommended velocity - C_{rec} [m/s]
Minimum recommended velocity - $C_{min, rec}$ [m/s]
Maximum velocity - C_{max} [m/s]
Part load velocity - C_{part} [m/s]

We know the density ρ ≈ 3.0 kg/m³, consequently C_{rec} as well as $C_{min, rec}$ can be found in the figure below (standard valve).

C_{rec} ≈14 m/s
$C_{min, rec}$ ≈ 3 m/s

US-Units

Assumed working conditions:
Maximum flow $\dot{V}$ = 1160 gpm
Density ρ = 0.187 lb/feet³
Minimum part load = 33%

Used expressions:
Recommended velocity - C_{rec} [ft/min]
Minimum recommended velocity - $C_{min, rec}$ [ft/min]
Maximum velocity - C_{max} [ft/min]
Part load velocity - C_{part} [ft/min]

We know the density ρ ≈ 0.187 lb/feet³, consequently C_{rec} as well as $C_{min, rec}$ can be found in the figure (standard valve).

C_{rec} ≈ 2756 ft/min
$C_{min, rec}$ ≈ 591 ft/min

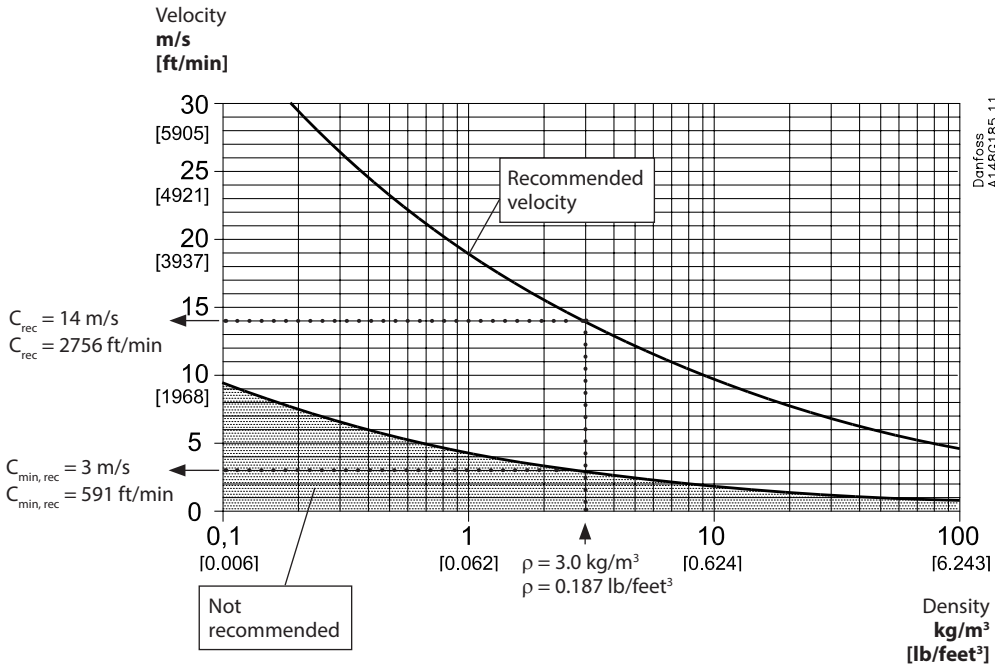

Fig. 1

Selection example continued on following page.

Computation and selection
(continued)

Knowing that $\dot{V}$ = 1000 m³/h (1160 gpm) fig. 2 gives the following choices:

For SCA-X/CHV-X in size DN 100 the maximum velocity $C_{max} \approx$ 31 m/s (6100 ft/min)
For SCA-X/CHV-X in size DN 125 the maximum velocity $C_{max} \approx$ 20 m/s (3900 ft/min)

In conclusion SCA-X in size DN 125 is selected because $C_{max} \approx$ 20 m/s (3900 ft/min) comes nearest to the recommended velocity $C_{rec} \approx$ 14 m/s (2756 ft/min) and at the same time part load conditions fulfil the requirements, as described:

We know that $C_{max} \approx$ 20 m/s (3900 ft/min) and that minimum part load is 33%. It follows that $C_{part} \approx$ 6.5 m/s (1290 ft/min). Thus, C_{part} (6.5 m/s) > $C_{min, rec}$ (3.0 m/s) and the selected SCA-X model DN125 is the perfect choice.

If the valve in question (for instance under part load conditions) provides a velocity less than $C_{min, rec}$ the valve might start hammering and become noisy. As a result the valve may wear prematurely.

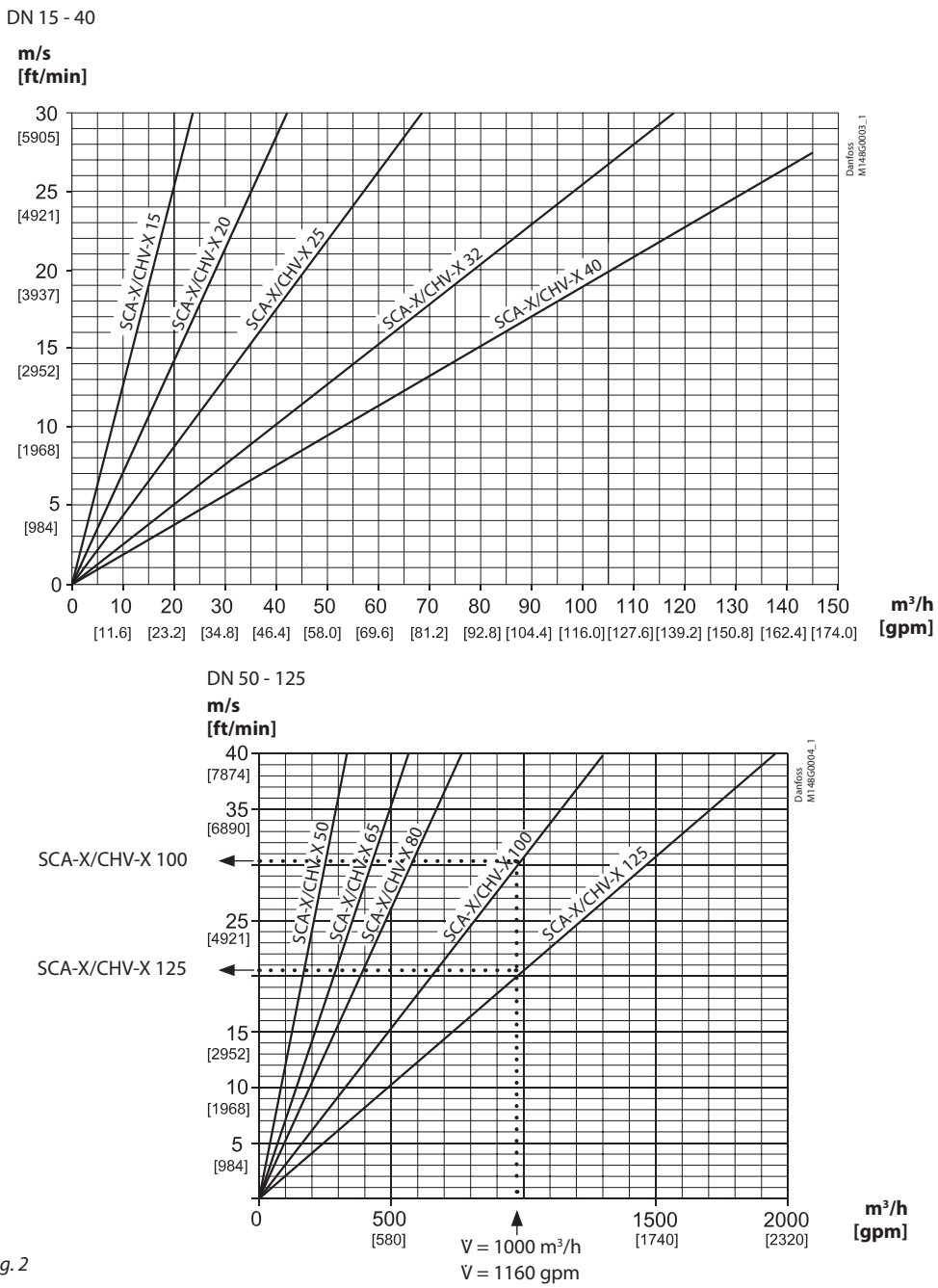

Fig. 2

Material specification

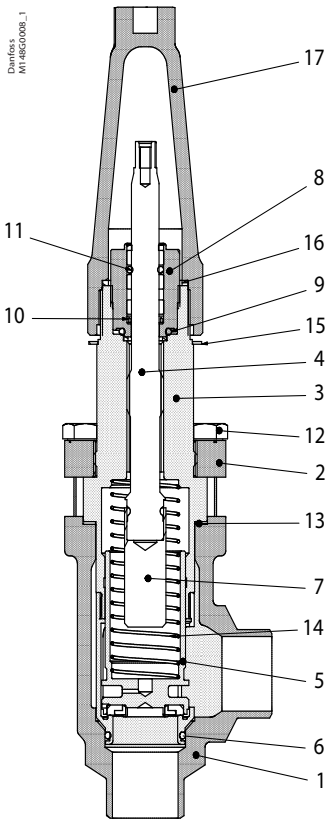

SCA-X 15 - 40

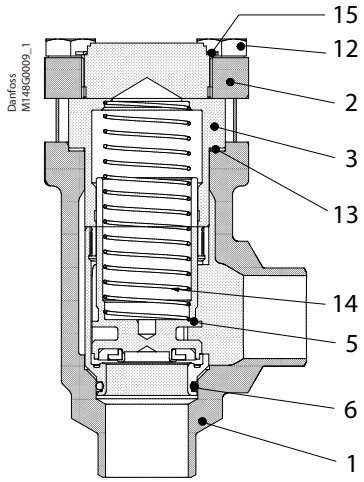

CHV-X 15 - 40

No.	Part	Material	DIN/EN	ISO	ASTM
1	Housing	Steel	G20Mn5QT, 10213-3 ---------- P285QH+QT, 10222-4		LCC, A352 ---------- LF2, A350
2	Bonnet, Flange	Steel	P275NL1 EN10028-3		LF2, A350
3	Bonnet, Insert	Steel	11SMn30 10087	Type 2 R 683/9	AISI 1213
4	Spindle	Stainless steel	X8CrNiS18-9, EN 10088-3	Type 17 683/13	AISI 303
5	Cone	Steel Teflon (PTFE)			
6	O-ring	Cloroprene (Neoprene)			
7	Spindle extension	Steel			
8	Packing gland O-rings	Stainless steel Cloroprene (Neoprene)	X8CrNiS18-9 10088	Type 17 683/13	AISI 303
9	Packing washer	Aluminium			
10	Spring loaded seal	Teflon (PTFE)			
11	O-ring	Cloroprene (Neoprene)			
12	Bolts	Stainless steel	A2-70	A2-70	Type 308
13	Gasket	Fiber, non-asbestos			
14	Spring	Steel			
15	Identification ring	Stainless steel			
16	Seal cap gasket	Nylon			
17	Spindle seal cap	Aluminium			

Material specification

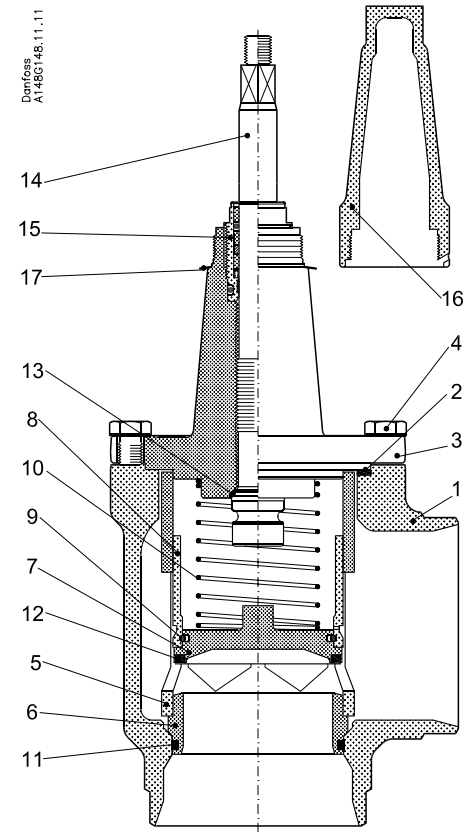

SCA-X 50 - 125

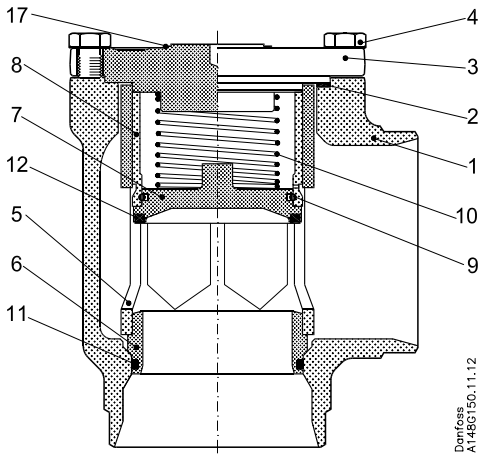

CHV-X 50 - 125

No.	Part	Material	DIN/EN	ISO	ASTM
1	Housing DN 50-65	Steel	G20Mn5QT, 10213-3 ---------- P285QH+QT, 10222-4		LCC, A352 ---------- LF2, A350
	Housing DN 80-125	Steel	G20Mn5 QT SEW 685		LCC, A352
2	Gasket	Fiber, Non-asbestos			
3	SCA-X: Valve bonnet CHV-X: End cover	Steel	P285 QH EN 10222-4 ---------- P275NL1 or 2 EN10028-3		LF2, A350 ---------- A, A662
4	Bolts	Stainless steel	A2-70	A2-70	A-276
5	Tube	Steel			
6	Seat	Steel			
7	Valve plate	Steel			
8	Guide sleeve	Steel			
9	Spring ring	Steel			
10	Spring	Steel			
11	O-ring	Cloroprene (Neoprene)			
12	Teflon ring	Teflon (PTFE)			
13	Soft back seal	Teflon (PTFE)			
14	Spindle DN 50-65	Stainless steel	X8CrNiS18-9 17440	Type 17 R 683/13	AISI 303
	Spindle DN 80-125	Stainless steel	X5CrNi1810 17440	Type 11 683/13	AISI 304 A-276
15	Packing gland	Stainless steel	X8CrNiS18-9, EN 10088-3,	Type 17 R 683/13	AISI 303
16	Spindle seal cap and gasket	Aluminium			
17	Marking label	Stainless steel			

Application

Figure 3 shows the check & stop valve SCA-X in the discharge line of a screw compressor unit. The SCA-X valve in the discharge line prevents "back condensation" in the oil separator as well as pressure equalising through the compressor.

Compared to an ordinary stop and check valve arrangement the combined stop/check valve solution, as shown, is easier to install and has lower flow resistance.

Installation of the SCA-X/CHV-X in the economizer line is **not** recommended.

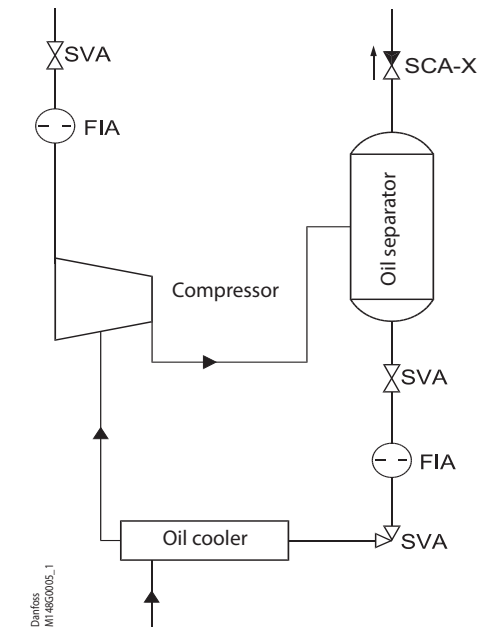

Fig. 3

Dimensions and weights

SCA-X/CHV-X 15 - 40 (½- 1½ in.)

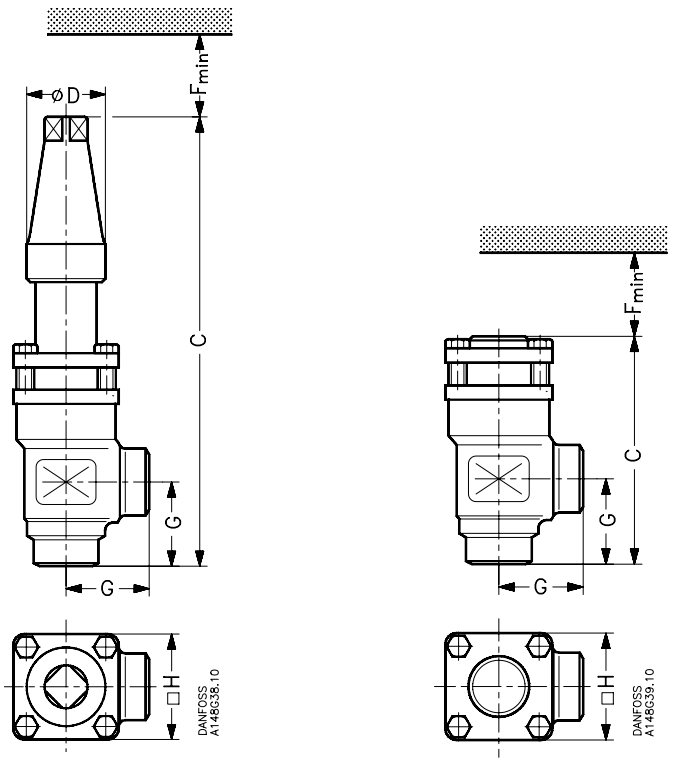

SCA-X 15 - 40 *CHV-X 15 - 40*

Valve size		C		G		ØD		F_{min}		□H	Weight
SCA-X 15 - 40											
SCA-X 15 (½ in.)	mm in.	212 8.35		45 1.77		38 1.50		60 2.36		60 2.36	1.6 kg 3.53 lb
SCA-X 20 (¾ in.)	mm in.	212 8.35		45 1.77		38 1.50		60 2.36		60 2.36	1.6 kg 3.53 lb
SCA-X 25 (1 in.)	mm in.	295 11.61		55 2.17		50 1.97		85 3.35		70 2.76	3.2 kg 7.05 lb
SCA-X 32 (1¼ in.)	mm in.	295 11.61		55 2.17		50 1.97		85 3.35		70 2.76	3.2 kg 7.05 lb
SCA-X 40 (1½ in.)	mm in.	295 11.61		55 2.17		50 1.97		85 3.35		70 2.76	3.2 kg 7.05 lb

Valve size		C		G				F_{min}		□H	Weight
CHV-X 15 - 40											
CHV-X 15 (½ in.)	mm in.	103 4.06		45 1.77				60 2.36		60 2.36	1.2 kg 2.65 lb
CHV-X 20 (¾ in.)	mm in.	103 4.06		45 1.77				60 2.36		60 2.36	1.2 kg 2.65 lb
CHV-X 25 (1 in.)	mm in.	143 5.63		55 2.17				85 3.35		70 2.76	2.3 kg 5.07 lb
CHV-X 32 (1¼ in.)	mm in.	143 5.63		55 2.17				85 3.35		70 2.76	2.3 kg 5.07 lb
CHV-X 40 (1½ in.)	mm in.	143 5.63		55 2.17				85 3.35		70 2.76	2.3 kg 5.07 lb

Specified weights are approximate values only.

Dimensions and weights

SCA-X/CHV-X 50 - 65 (2 - 2½ in.)

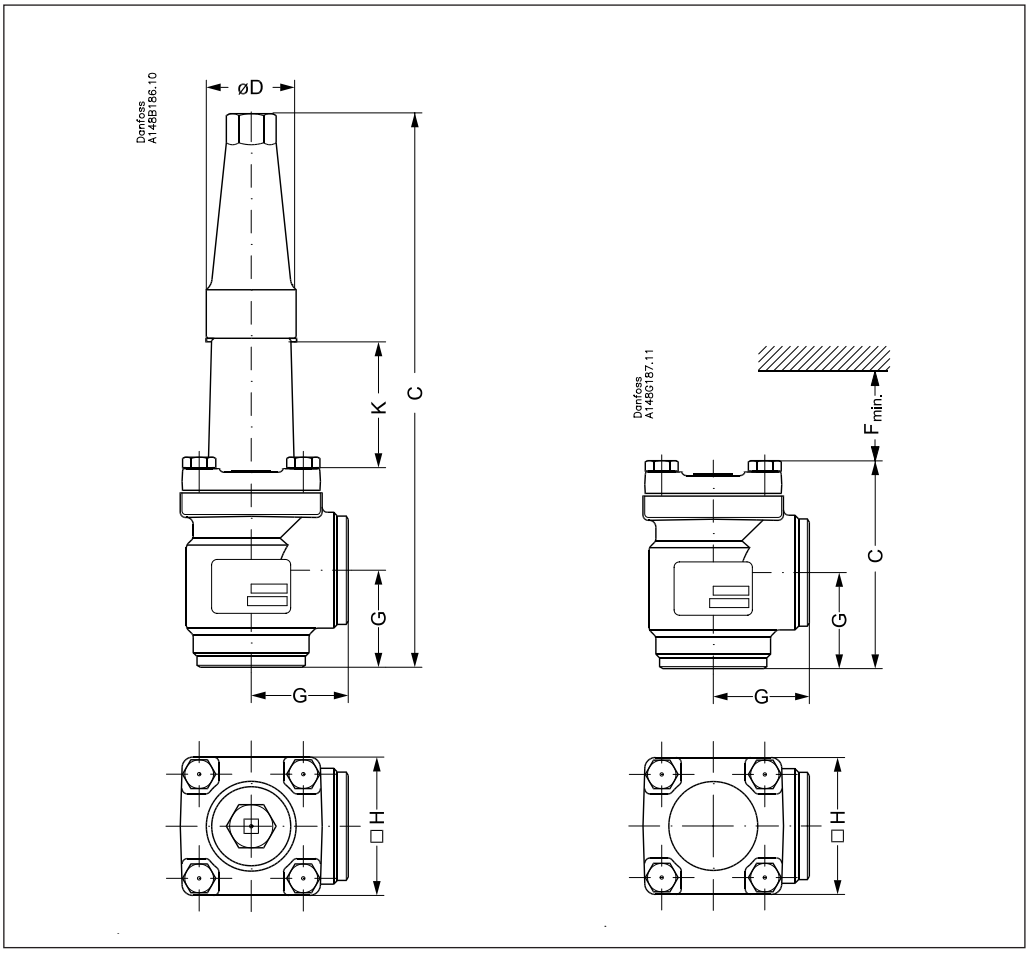

Valve size		K			C		G		∅D	□H		Weight
SCA-X												
SCA-X 50 SCA-X (2)	mm in.	70 2.76			315 12.40		60 2.36		50 1.97	77 3.03		3.8 kg 8.40 lb
SCA-X 65 SCA-X (2½)	mm in.	70 2.76		12.20	335 13.19		70 2.76	3.94	50 1.97	90 3.54		5.5 kg 12.16 lb

Valve size					C		G		$F_{min.}$	□H		Weight
CHV-X												
CHV-X 50 CHV-X (2)	mm in.				132 5.20		60 2.36		92 3.62	77 3.03		3.2 kg 7.10 lb
CHV-X 65 CHV-X (2½)	mm in.				152 5.98		70 2.76		107 4.21	90 3.54		4.5 kg 9.95 lb

Specified weights are approximate values only.

Dimensions and weights

SCA-X/CHV-X 80 - 125 (3 - 5 in.)

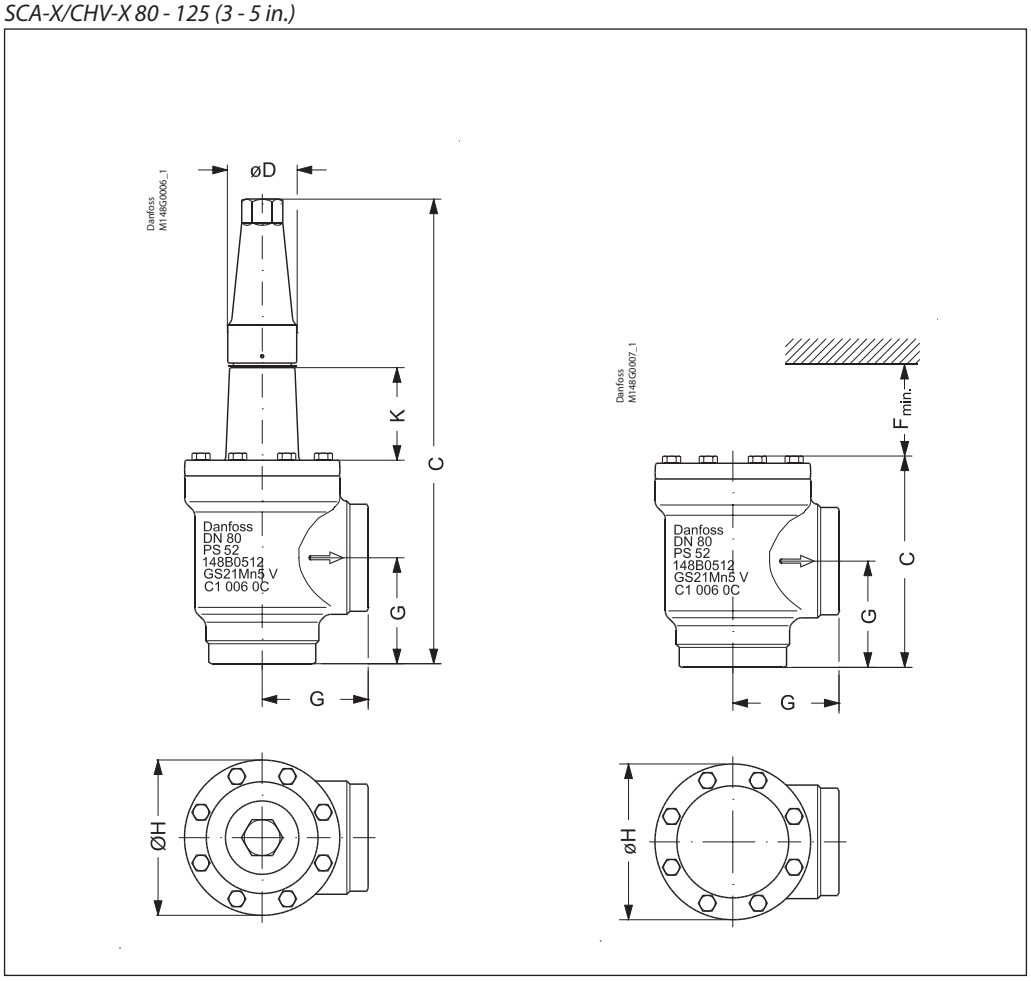

Valve size		K			C		G		∅D		∅H	Weight
SCA-X												
SCA-X 80 SCA-X (3)	mm in.	76 3.00			388 15.28		90 3.54		58 2.28		129 5.08	9.7 kg 21.4 lb
SCA-X 100 SCA-X (4)	mm in.	90 3.54			437 17.20		106 4.17		58 2.28		156 6.14	15.3 kg 33.7 lb
SCA-X 125 SCA-X (5)	mm in.	90 3.54			533 20.98		128 5.04		74 2.91		193 7.60	28.1 kg 61.9 lb

Valve size					C		G			$F_{min.}$	∅H	Weight
CHV-X												
CHV-X 80 CHV-X (3)	mm in.				189 7.44		90 3.54			133 5.24	129 5.08	8.7 kg 19.23 lb
CHV-X 100 CHV-X (4)	mm in.				223 8.78		106 4.17			163 6.43	156 6.14	14.3 kg 31.60 lb
CHV-X 125 CHV-X (5)	mm in.				268 10.55		128 5.04			190 7.48	193 7.60	25.6 kg 56.58 lb

Specified weights are approximate values only.

Ordering SVA-X from the parts programme

Example
(select from table 1 and 2)

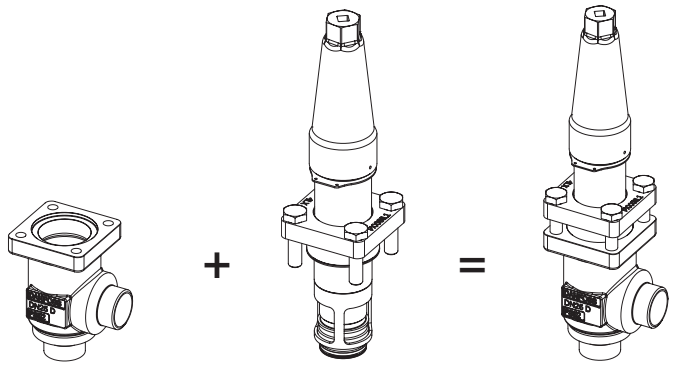

Valve housing, size 25 (1 in.), butt weld F, angleway, **148B6416**
Table 1

Top part, SCA-X size 25 (1 in.) **148B5482**
Table 2

Table 1
SVL valve housings w/different connections

		DN 15-65 mm (½ - 2½ in.)	*DN 80-125 mm (3 - 5 in.)*
		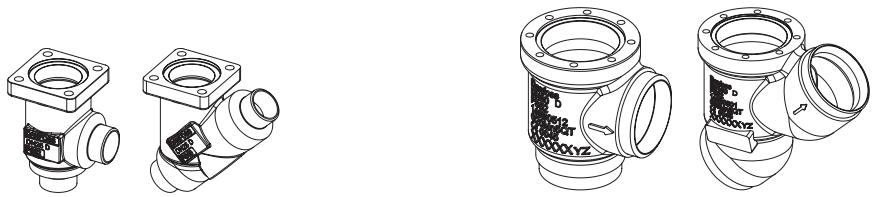	
Sizes [DN]		**Valve Housing SVL**	
		Butt weld F	
mm	**in.**	**ANG**	**STR**
15	½	**148B6414**	**148B6424**
20	¾	**148B6415**	**148B6425**
25	1	**148B6416**	**148B6426**
32	1¼	**148B6417**	**148B6427**
40	1½	**148B6418**	**148B6428**
50	2	**148B6419**	**148B6429**
65	2½	**148B6420**	**148B6430**
80	3	**148B6421**	**148B6431**
100	4	**148B6422**	**148B6432**
125	5	**148B6423**	**148B6433**

Table 2
SCA-X complete top part including gaskets and bolts

		SCA-X 15-50	SCA-X 80-125
		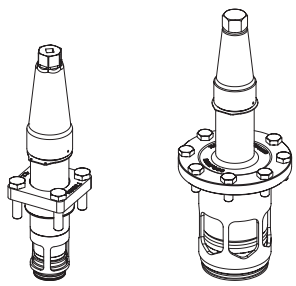	
Sizes [DN]		**Complete top part**	
mm	**in.**	**SCA-X**	
15	½	**148B5282**	
20	¾		
25	1	**148B5482**	
32	1¼		
40	1½		
50	2	**148B5735**	
65	2½	**148B5825**	
80	3	**148B5918**	
100	4	**148B6019**	
125	5	**148B6118**	

Ordering CHV-X from the parts programme

Example
(select from table 1 and 2)

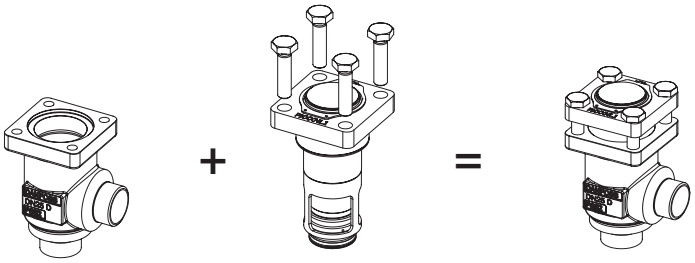

Valve housing, size 25 (1 in.), butt weld F, angleway, **148B6416** Table 1

+

Top part, CHV-X size 25 (1 in.) **148B5483** *Table 2*

=

Table 1
SVL valve housings w/different connections

		DN 15-65 mm (½ - 2½ in.)	*DN 80-125 mm (3 - 5 in.)*
		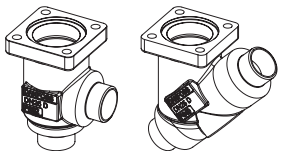	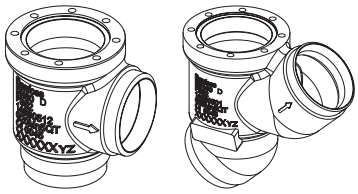
Sizes [DN]		**Valve Housing SVL**	
		Butt weld F	
mm	**in.**	**ANG**	**STR**
15	½	**148B6414**	**148B6424**
20	¾	**148B6415**	**148B6425**
25	1	**148B6416**	**148B6426**
32	1¼	**148B6417**	**148B6427**
40	1½	**148B6418**	**148B6428**
50	2	**148B6419**	**148B6429**
65	2½	**148B6420**	**148B6430**
80	3	**148B6421**	**148B6431**
100	4	**148B6422**	**148B6432**
125	5	**148B6423**	**148B6433**

Table 2
CHV-X complete top part including gaskets and bolts

		CHV-X 15-50	CHV-X 80-125
		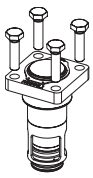	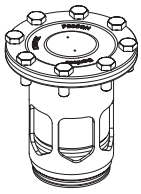
Sizes [DN]		**Complete top part**	
mm	**in.**	**CHV-X**	
15	½	**148B5283**	
20	¾		
25	1	**148B5483**	
32	1¼		
40	1½		
50	2	**148B5747**	
65	2½	**148B5827**	
80	3	**148B5919**	
100	4	**148B6022**	
125	5	**148B6119**	

FIA strainers

FIA strainers are a range of angleway and straightway strainers, which are carefully designed to give favourable flow conditions. The design makes the strainer easy to install, and ensures quick strainer inspection and cleaning.

FIA strainers are used ahead of automatic controls, pumps, compressors etc., for initial plant start-up and where permanent filtration of the refrigerant is required. The strainer reduces the risk of undesirable system breakdowns and reduces wear and tear on plant components.

FIA strainers are equipped with a screen mesh of stainless steel, available in sizes 100, 150, 250 and 500µ (microns*), (US 150, 100, 72, 38 mesh*).

* Mesh is the number of threads per inch.
µ (microns) is the distance between two threads
(1µ = 1 /1000 mm).

Features FIA

- Modular Concept:
  - Each valve housing is available with butt-weld F connection and with several different sizes.
  - Possible to convert FIA strainers to any other product in the SVL family (Shut-off valve, regulating valve, check & stop valve or check valve) just by replacing the complete top part.
- Fast and easy overhaul service. It is easy to replace the top part and no welding is needed.
- Filter net of stainless steel mounted direct without extra gaskets means easy servicing.
- Two types of strainer inserts are available:
  - A plain insert of stainless steel.
  - A pleated insert (DN 15-200) with extra large surface, which ensures long intervals between cleaning and low pressure drop.
- FIA 15-40 (½ – 1 ½ in.):
  A special insert (50µ) can be used in combination with a standard version when cleaning a plant during commissioning.
- FIA 50-200 (2 - 8 in.):
  A large capacity filter bag (50µ) can be inserted for cleaning plant during commissioning.
- FIA 65-200 (2½ - 8 in.) can be equipped with a magnetic insert for detention of iron particles and other magnetic particles.
- Each strainer clearly marked with type, size and performance range
- Housing and bonnet of low temperature steel in accordance with the requirements of the Pressure Equipment Directive and those of other international classification authorities
- Classification: DNV, CRN, BV, EAC etc.
  To get an updated list of certification on the products please contact your local Danfoss Sales Company.

Technical data

- *Refrigerants*
  Applicable to HCFC, HFC, R717 (Ammonia) and R744 (CO2). For further information refer to the product instruction for FIA.
- *Temperature range*
  –60/+150°C (–76/+302°F).
- *Max. working pressure*
  52 bar g (754 psi g) for DN15 to DN 125
  25 bar g (362 psi g) for DN 150 to DN 200.

  For more detail on pressure and temperature range; please see page 3.

Connections

F

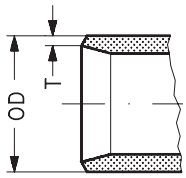

Size mm	Size in.	OD mm	T mm	OD in.	T in.
Butt-weld connection type F					
15	½	21.3	2	0.839	0.079
20	¾	26.9	2	1.059	0.079
25	1	33.7	2	1.327	0.079
32	1¼	42.4	2	1.669	0.079
40	1½	48.3	2	1.902	0.079
50	2	60.3	2	2.37	0.079
65	2½	76.1	2	3	0.079
80	3	90.9	3	3.579	0.118
100	4	116.3	3	4.579	0.118
125	5	141.7	3	5.579	0.118
150	6	170.3	3	6.705	0.118
200	8	221.1	3	8.705	0.118

Design

Connections
Available with the following connections:

- Butt-weld connection "F"
  DN 15 to 65 size: 2mm thick
  DN 80 -200 size: 3 mm thick

Strainer Insert
A filter grid and filter net of stainless steel ensure long element life. The filter net offers a very high degree of cleanability.

Housing
The strainer housing is made of special, cold resistant steel.

Installation/Maintenance
The strainer is designed to resist high internal pressures. However, the piping system in general should be designed to avoid liquid traps and reduce the risk of hydraulic pressure caused by thermal expansion.
Install the strainer with the cover in downward position.

Danfoss recommends replacement/cleaning of the strainer when the differential pressure loss >0.5 bar (7.3 psi) in the liquid line and >0.05 bar (0.7 psi) in the suction line. The max. permissible differential pressure is 1 bar (15 psi).

For further information refer to installation instruction for FIA.

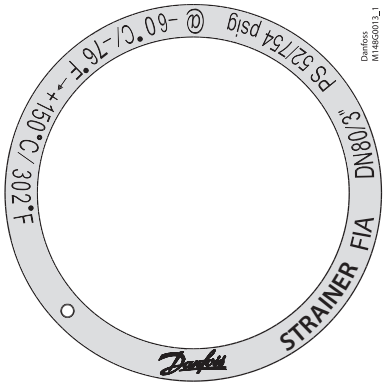

Example of marking ring, FIA

Pressure Equipment Directive (PED)
FIA strainers are approved in accordance with the European standard specified in the Pressure Equipment Directive and are CE marked.
For further details / restrictions - see Installation Instruction.

Nominal bore	DN ≤ 25 (1 in.)	DN 32-80 mm (1 1/4 - 3 in.)	DN 100-200 mm (4-8 in.)
Classified for	Fluid group I		
Category	Article 3, paragraph 3	II	III

Selection of strainer size

The mesh aperture size of the strainer must satisfy the requirements stated by the suppliers of the equipment to be protected.

The following recommendations of aperture size apply in general to refrigeration installations:

All lines
First start up: **50**µ
(Use strainer element with removable insert for FIA DN15-40 or separate filter bag for FIA DN 50-200. 50µ insert should normally be removed after the first 24 hours of operation)

Liquid Lines
Ahead of pumps: ..... **500**µ [38 mesh]
After pumps: ..... **150**µ [100 mesh] / 250µ [72 mesh]
In front of AKVA valves ..... **100**µ [150 mesh]

Protection of automatic regulation equipment
Generally ..... **150**µ [100 mesh] / 250µ [72 mesh]
Sensitive equipment, e.g.
suction regulators with low temperature ..... **250**µ [72 mesh]

Suction Lines
Ahead of screw compressor ..... **250**µ [72 mesh]
Ahead of piston compressor ..... **150**µ [100 mesh]

Definition
Mesh is the number of threads per inch.
µ (microns) is the distance between two threads (1µ = 1 /1000 mm).

Flow coefficient (DIN/ANSI)

Connection size (DN) FIA	µ	mesh	wire mm	wire in.	free space %	screen area Plain elements cm²	Plain elements in²	Pleated elements cm²	Pleated elements in²
15 - 20 (1/2" - 3/4")	100		0.068	0.003	35	25	3.9	45	7.0
	150	100	0.10	0.004	36	25	3.9	45	7.0
	250	72	0.10	0.004	51	25	3.9	45	7.0
	500	38	0.16	0.006	57.6	25	3.9	45	7.0
25 - 40 (1" - 1 1/2")	100		0.068	0.003	35	71	11	160	25.0
	150	100	0.10	0.004	36	71	11	160	25.0
	250	72	0.10	0.004	51	71	11	160	25.0
	500	38	0.16	0.006	57.6	71	11	160	25.0
50 (2")	100		0.068	0.003	35	71	11	200	31.2
	150	100	0.10	0.004	36	87	13.5	200	31.2
	250	72	0.10	0.004	51	87	13.5	200	31.2
	500	38	0.16	0.006	57.6	87	13.5	200	31.2
65 (2 1/2")	150	100	0.10	0.004	36	127	19.7	305	47.6
	250	72	0.10	0.004	51	127	19.7	305	47.6
	500	38	0.16	0.006	57.6	127	19.7	305	47.6
80 (3")	150	100	0.10	0.004	36	205	31.8	450	70.2
	250	72	0.10	0.004	51	205	31.8	450	70.2
	500	38	0.16	0.006	57.6	205	31.8	450	70.2
100 (4")	150	100	0.10	0.004	36	370	57.4	790	123.2
	250	72	0.10	0.004	51	370	57.4	790	123.2
	500	38	0.16	0.006	57.6	370	57.4	790	123.2
125 (5")	150	100	0.10	0.004	36	510	79.1	1105	172.4
	250	72	0.10	0.004	51	510	79.1	1105	172.4
	500	38	0.16	0.006	57.6	510	79.1	1105	172.4
150 (6")	150	100	0.10	0.004	36	726	112.5	1600	249.6
	250	72	0.10	0.004	51	726	112.5	1600	249.6
	500	38	0.16	0.006	57.6	726	112.5	1600	249.6
200 (8")	150	100	0.10	0.004	36	1315	203.8		
	250	72	0.10	0.004	51	1315	203.8		
	500	38	0.16	0.006	57.6	1315	203.8		

Selection of strainer size
(Continued)

K_v values

DN	FIA angle - plain filter net				FIA angle - pleated filter net		
	µ100	µ150	µ250	µ500	µ150	µ250	µ500
15	3.3	3.4	3.5	3.7	4.2		
20	6.9	7.1	7.3	7.7	8.8		
25	13.8	14.0	14.5	15.2	17.2	17.9	
32	23.0	23.8	24.7	25.5	29.2	30.5	
40	25.1	25.5	26.4	28.1	31.4	32.6	
50	45.1	45.9	47.6	50.2	56.7	58.8	62.0
65		56.1	57.8	60.4	69.3	71.4	74.6
80		104.6	108.0	113.1	129.2	133.4	139.7
100		162.4	167.5	176.0	200.6	206.9	217.4
125		275.4	283.9	298.4	340.2	350.7	368.6
150		362.1	373.2	391.9	447.3		
200		572.9	590.8	620.5			

DN	FIA straight - plain filter net				FIA straight - pleated filter net		
	µ100	µ150	µ250	µ500	µ150	µ250	µ500
15	2.5	2.6	2.7	2.8	3.3		
20	5.3	5.4	5.6	5.9	6.9		
25	10.5	10.7	11.1	11.6	13.8	14.5	
32	17.6	18.2	18.9	19.5	23.9	24.7	
40	19.2	19.5	20.2	21.5	25.5	26.4	
50	34.5	35.1	36.4	38.4	45.9	47.6	50.2
65		42.9	44.2	46.2	56.1	57.8	60.4
80		80.0	82.6	86.5	104.6	108.0	113.1
100		124.2	128.1	134.6	162.4	167.5	176.0
125		210.6	217.1	228.2	275.4	283.9	298.4
150		276.9	285.4	299.7	362.1		
200		438.1	451.8	474.5			

Material specification

FIA 15 - 40 (1/2 in. - 1 1/2 in.)

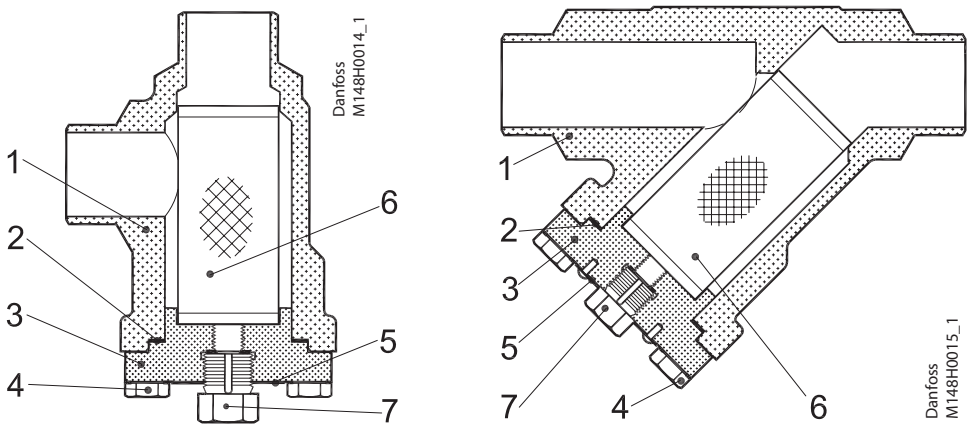

FIA 15-40 (1/2 in. - 1 1/2 in.)

No.	Part	Material	DIN	ISO	ASTM
1	Housing	Steel	G20Mn5QT, 10213-3 ---------- P285QH+QT, 10222-4		LCC, A352 ---------- LF2, A350
2	Gasket	Fibre, Non-asbestos			
3	Cover	Steel	P285QH EN10222-4 ---------- P275NL1 or 2 EN10028-3		LF2, A350 ---------- A, A662
4	Bolts	Stainless steel	A2-70	A2-70	Type 308
5	Marking label	Aluminium			
6	Strainer element	Stainless steel			
7	Pressure relief (screw)	Stainless steel			

Material specification

FIA 50 - 200 (2 in. - 8 in.)

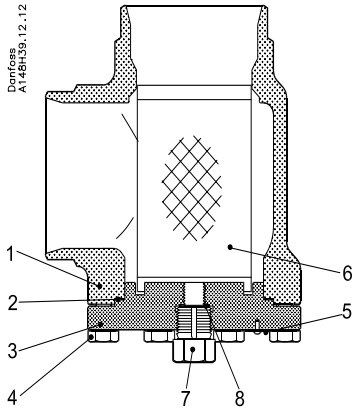

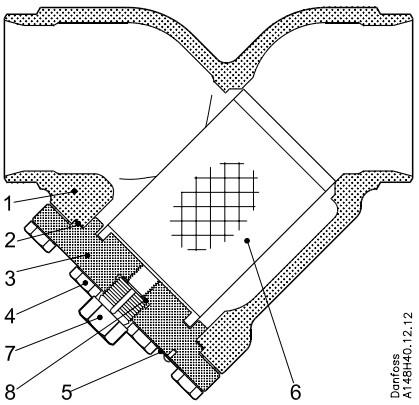

FIA 50-200 (2 in. - 8 in.)

No.	Part	Material	DIN	ISO	ASTM
1	Housing	Steel	G20Mn5QT, 10213-3 ---------- P285QH+QT, 10222-4		LCC, A352 ---------- LF2, A350
2	Gasket	Fibre, Non-asbestos			
3	Cover	Steel	P285QH EN10222-4 ---------- P275NL1 or 2 EN10028-3		LF2, A350 ---------- A, A662
4	Bolts	Stainless steel	A2-70	A2-70	Type 308
5	Marking label	Aluminium			
6	Strainer element	Stainless steel			
7	Pressure relief (screw)	Stainless steel			
8*	Packing washer	Aluminium			

* pos 8 used in FIA 50-200

Dimensions and weights

FIA 15 - 65

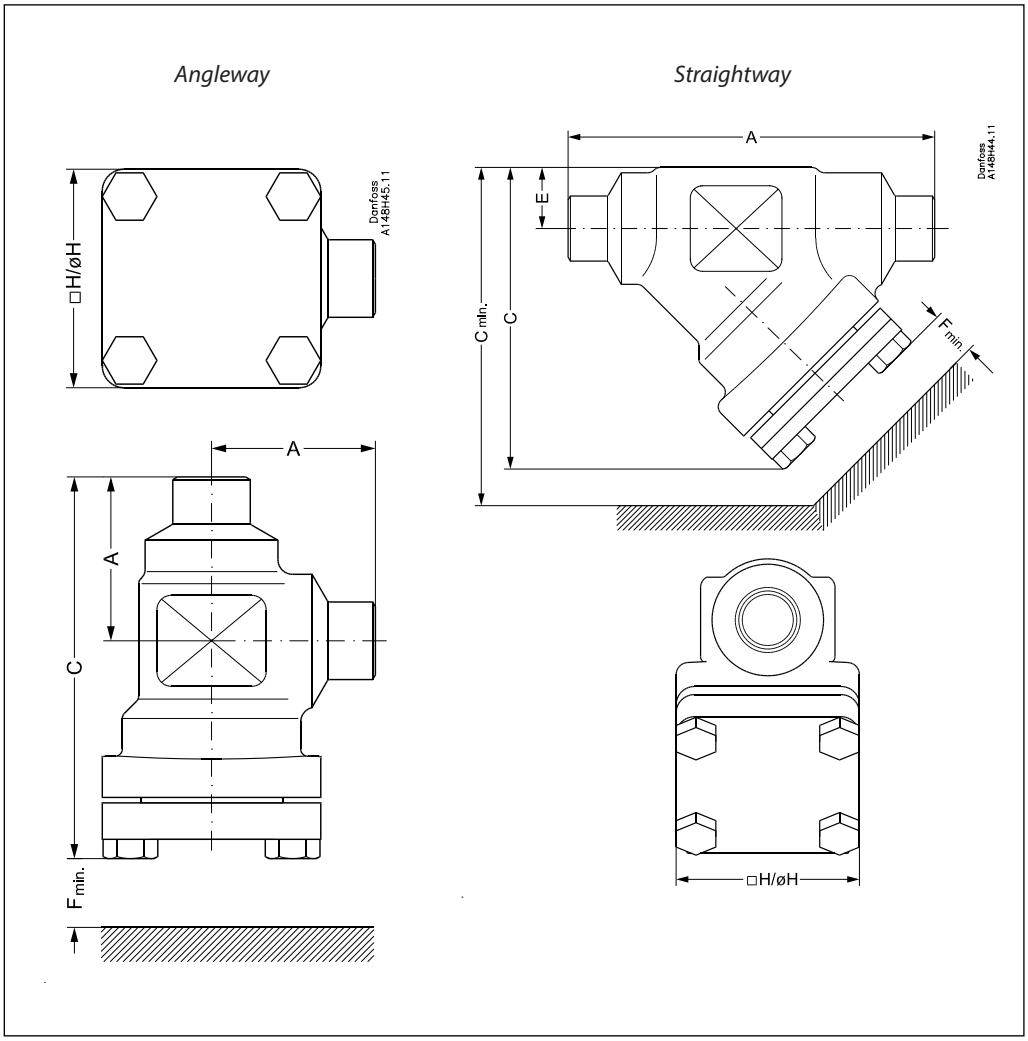

Angleway

Strainer size		A	C	H	$F_{min.}$	Weight
FIA 15-20	mm	45	105	60	68	1.1 kg
(1/2" - 3/4")	in.	1.77	4.13	2.36	2.68	2.4 lbs
FIA 25-40	mm	55	132	70	95	1.7 kg
(1" - 1 1/2")	in.	2.17	5.20	2.76	3.74	3.7 lbs
FIA 50	mm	60	132	77	92	2.8 kg
(2")	in.	2.36	5.20	3.03	3.62	6.2 lbs
FIA 65	mm	70	152	90	107	3.8 kg
(2 1/2")	in.	2.76	5.98	3.54	4.21	8.4 lbs

Straightway

Strainer size		A	C	$C_{min.}$	H	E	$F_{min.}$	Weight
FIA 15-20	mm	120	99	133	60	20	68	1.4 kg
(1/2" - 3/4")	in.	4.72	3.90	5.24	2.36	0.79	2.68	3.1 lbs
FIA 25-40	mm	155	129	177	70	26	95	2.4 kg
(1" - 1 1/2")	in.	6.10	5.08	6.97	2.76	1.02	3.74	5.3 lbs
FIA 50	mm	148	138	184	77	32	92	3.5 kg
(2")	in.	5.83	5.43	7.24	3.03	1.26	3.62	7.7 lbs
FIA 65	mm	176	165	219	90	40	107	5.3 kg
(2 1/2")	in.	6.93	6.50	8.62	3.54	1.57	4.21	11.7 lbs

Dimensions and weights

FIA 80 - 200

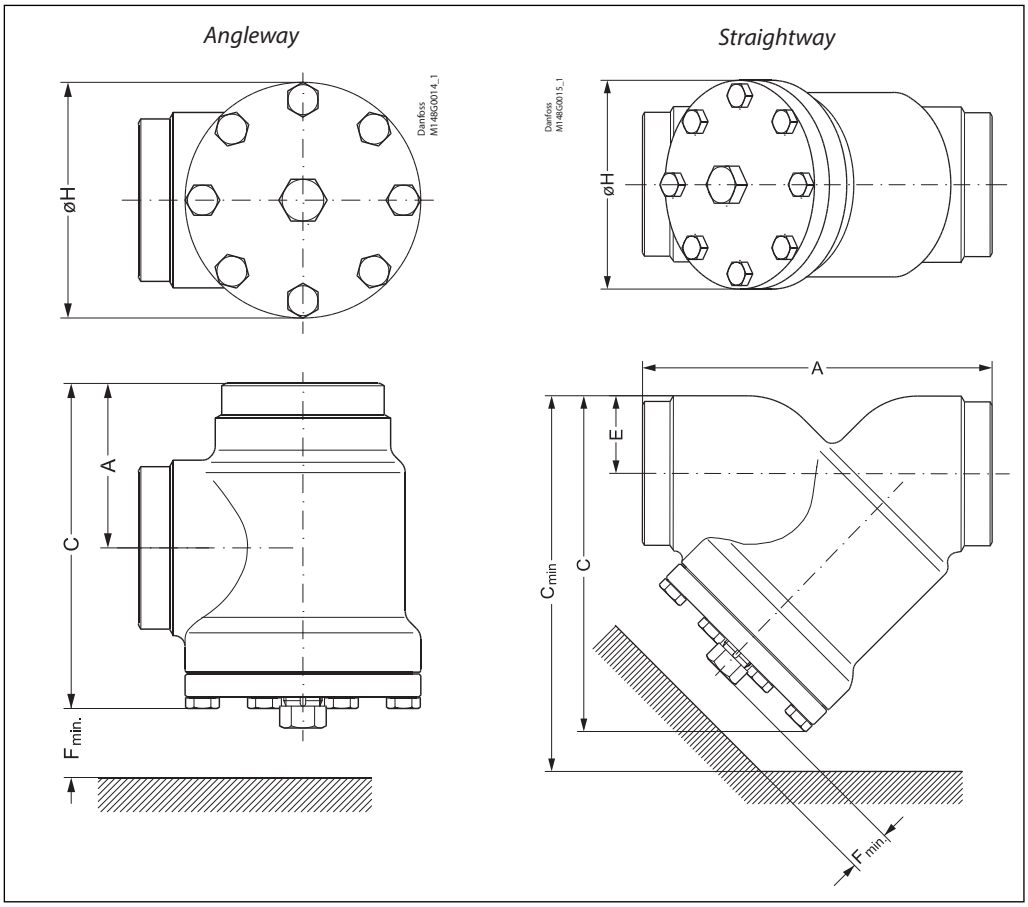

Angleway

Strainer size		A	C	H	$F_{min.}$	Weight
FIA 80	mm	90	189	129	133	7.3 kg
(3")	in.	3.54	7.44	5.08	5.24	16.1 lbs
FIA 100	mm	106	223	156	163	11.9 kg
(4")	in.	4.17	8.78	6.14	6.42	26.2 lbs
FIA 125	mm	128	268	192	190	21.2 kg
(5")	in.	5.04	10.6	7.56	7.48	46.7 lbs
FIA 150	mm	145	303	219	223	30.5 kg
(6")	in.	5.71	11.93	8.62	8.78	67.2 lbs
FIA 200	mm	180	372	276	280	68 kg
(8")	in.	7.09	14.65	10.87	11.02	150 lbs

Straightway

Strainer size		A	C	$C_{min.}$	H	E	$F_{min.}$	Weight
FIA 80	mm	216	204	271	129	48	133	8.6 kg
(3")	in.	8.50	8.03	10.67	5.08	1.89	5.24	19 lbs
FIA 100	mm	264	256	337	156	60	163	14.9 kg
(4")	in.	10.39	10.08	13.27	6.14	2.36	6.42	32.8 lbs
FIA 125	mm	322	313	408	192	74	190	26.9 kg
(5")	in.	12.68	12.32	16.06	7.56	2.91	7.48	59.3 lbs
FIA 150	mm	370	370	482	219	91	223	51 kg
(6")	in.	14.57	14.57	18.98	8.62	3.58	8.78	112 lbs
FIA 200	mm	464	465	605	276	117	280	95 kg
(8")	in.	18.27	18.31	23.82	10.87	4.61	11.02	209 lbs

Ordering

The table below is used to identify the strainer required. Please note that you have to order **FIA strainer without element, a strainer element** and **accessories.**

Example:
FIA 150 F ANG + FIA-X 150 150µ Strainer Element + Filter Bag = **148B6442** + **148H3134** + **148H3155**

Size mm	Size in.	Type	FIA Without Strainer Element	Strainer Element 100µ 150 mesh	Strainer Element 150µ 100 mesh	Strainer Element 250µ 72 mesh	Strainer Element 500µ 38 mesh	Pleated Strainer element 150µ 100 mesh	Pleated Strainer element 250µ 72 mesh	Pleated Strainer element 500µ 38 mesh
Butt-weld F connection - Angleway										
150	6	FIA 150 F ANG	**148B6442**	-	**148H3134**	**148H3142**	**148H3148**	**148H3226**	-	-
200	8	FIA 200 F ANG	**148B6443**	-	**148H3135**	**148H3143**	**148H3149**	**148H3297**	-	-
Butt-weld F connection - Straightway										
150	6	FIA 150 F STR	**148B6444**	-	**148H3134**	**148H3142**	**148H3148**	**148H3226**	-	-
200	8	FIA 200 F STR	**148B6445**	-	**148H3135**	**148H3143**	**148H3149**	**148H3297**	-	-

F = Butt-weld F
ANG = Angleway
STR = Straightway

Accessories

Part	Accessory for	**Code number**
Magnet insert	FIA 65-100	**148H3447**
	FIA 125-200	**148H3448**

Part	Accessory for	**Code number**
Strainer element µ150 with removable element µ50 for the first start up	FIA 15-20	**148H3301**
	FIA 25-40	**148H3302**

Part	Accessory for	**Code number**
Filter bag	FIA 50	**148H3150**
	FIA 65	**148H3151**
	FIA 80	**148H3152**
	FIA 100	**148H3153**
	FIA 125	**148H3154**
	FIA 150	**148H3155**
	FIA 200	**148H3156**

Part	Accessory for	**Code number**
Purge valve complete	FIA 50 - 300	**148B3745**
Blind nut with gasket		**148H3450**

Ordering FIA strainers from the parts programme

Example
(select from table 1 and 2)

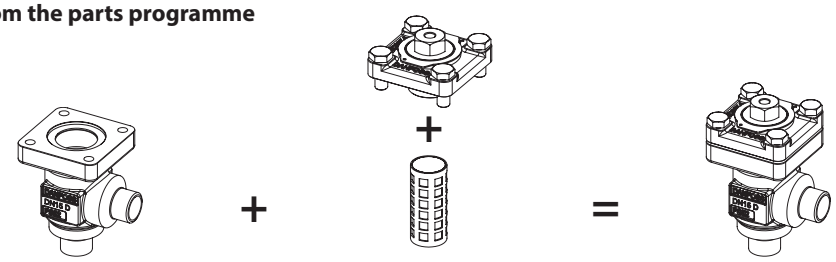

Strainer Housing, size 25 (1 in.), butt weld F, angleway,
148B6416
Table 1

+

Top part, FIA, size 25 (1 in.)
148B5484
+
Strainer insert, 250µ, 72 mesh
148H3127
Table 2

Table 1
SVL valve housings w/different connections

	DN 15-65 mm (½ - 2½ in.)	*DN 80-125 mm (3 - 5 in.)*
	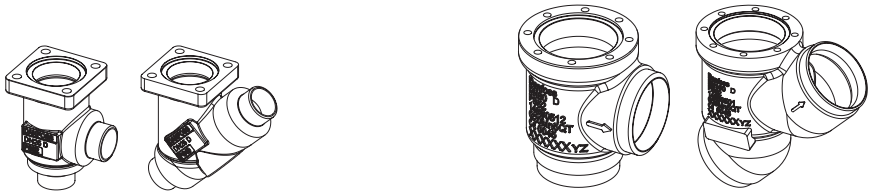	

Sizes [DN]		Valve Housing SVL	
		Butt weld F	
mm	**in.**	**ANG**	**STR**
15	½	**148B6414**	**148B6424**
20	¾	**148B6415**	**148B6425**
25	1	**148B6416**	**148B6426**
32	1¼	**148B6417**	**148B6427**
40	1½	**148B6418**	**148B6428**
50	2	**148B6419**	**148B6429**
65	2½	**148B6420**	**148B6430**
80	3	**148B6421**	**148B6431**
100	4	**148B6422**	**148B6432**
125	5	**148B6423**	**148B6433**

Table 2
FIA complete top part including gaskets and bolts

		FIA 15-65	FIA 80-125								
		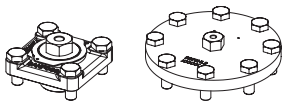			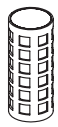						
Sizes [DN]		**Complete top part FIA**			Strainer Element 100µ 150 mesh	Strainer Element 150µ 100 mesh	Strainer Element 250µ 72 mesh	Strainer Element 500µ 38 mesh	Pleated Strainer element 150µ 100 mesh	Pleated Strainer element 250µ 72 mesh	Pleated Strainer element 500µ 38 mesh
mm	**in.**										
15	½	**148B5284**		+	**148H3122**	**148H3124**	**148H3126**	**148H3128**	**148H3303**	-	-
20	¾										
25	1	**148B5484**		+	**148H3123**	**148H3125**	**148H3127**	**148H3129**	**148H3304**	**148H3269**	-
32	1¼										
40	1½										
50	2	**148B5748**		+	**148H3157**	**148H3130**	**148H3138**	**148H3144**	**148H3179**	**148H3184**	**148H3189**
65	2½	**148B5832**		+	-	**148H3131**	**148H3139**	**148H3145**	**148H3180**	**148H3185**	**148H3190**
80	3	**148B5922**		+	-	**148H3119**	**148H3120**	**148H3121**	**148H3181**	**148H3186**	**148H3191**
100	4	**148B6024**		+	-	**148H3132**	**148H3140**	**148H3146**	**148H3182**	**148H3187**	**148H3192**
125	5	**148B6122**		+	-	**148H3133**	**148H3141**	**148H3147**	**148H3183**	**148H3188**	**148H3193**

Hand regulating valves REG-SA and REG-SB

REG-SA and REG-SB are angleway and straightway hand regulating valves, which act as normal stop valves in closed position.

The valves are available in two different versions – REG-SA and REG-SB designed for regulation purposes in liquid and expansion lines.

The valves are designed to meet the strict quality requirements on refrigerating installations specified by the international classification societies and are carefully designed to present favourable flow conditions and accurate linear characteristics.

REG-SA and REG-SB are equipped with vented cap and internal backseating enables replacement of the spindle seal whilst the valve is active, i.e. under pressure.

Features REG-SA and REG-SB

- Modular Concept:
  - Each valve housing is available with butt-weld F connection and in several different sizes.
  - Possible to convert REG-SA or REG-SB to any other product in the FlexlineTM SVL family (shut-off valve, check & stop valve, check valve or strainer) just by replacing the complete top part.
- Fast and easy valve overhaul service. It is easy to replace the top part and no welding is needed.
- Designed to ensure perfect regulation
- Internal backseating enables replacement of the spindle seal whilst the valve is active, i.e. under pressure.
- Easy to disassemble for inspection and possible repair.
- Long neck versions (DN 15 to DN 40) for insulated systems available from parts programme.
- Acts as a normal stop valve in closed position.
- Housing and bonnet material is low temperature steel according to requirements of the Pressure Equipment Directive and other international classification authorities.
- Exact capacity and setting of the valve can be calculated for all refrigerants by means of "DIR-calc™" (Danfoss Industrial Refrigeration calculation programme).
- Classification: DNV, CRN, BV, EAC etc.
  To get an updated list of certification on the products please contact your local Danfoss Sales Company.

Technical data

- *Refrigerants*
  Applicable to HCFC, HFC, R717 (Ammonia) and R744 (CO2). For further information refer to the product instruction for REG-SA and REG-SB.
- *Temperature range*
  –60/+150°C (–76/+302°F).
- *Max. working pressure*
  52 bar g (754 psi g)

  For more detail on pressure and temperature range; please see page 3.

Connections

F

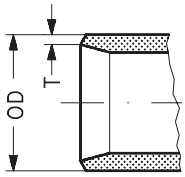

Butt-weld connection type F

Size mm	Size in.	OD mm	T mm	OD in.	T in.	Cone
15	½	21.3	2	0.839	0.079	A and B
20	¾	26.9	2	1.059	0.079	
25	1	33.7	2	1.327	0.079	A and B
32	1¼	42.4	2	1.669	0.079	
40	1½	48.3	2	1.902	0.079	
50	2	60.3	2	2.37	0.079	B
65	2½	76.1	2	3	0.079	B

Design

Housing
Housing is Standard SVA angleway or straightway housing allowing other inserts from the SVL platform to be installed.
Material is special, cold resistant steel

Connections
Available with the following connections:
- Butt-weld connection "F"
  DN 15 to 65 size: 2mm thick

The cone
The valves are available in two different versions – REG-SA with an A cone and REG-SB with a B cone. The A cone is designed for expansion lines, while the B cone is designed for regulating purposes e.g. liquid lines.

The valve cone is designed to ensure perfect regulation and provide an extensive regulating area. Irrespective of the refrigerant used, it is easy to obtain the correct capacity. A cone seal ring provides perfect sealing at a minimum closing momentum.

The valve cone can be turned on the spindle, thus there will be no friction between the cone and the seat when the valve is opened and closed.
Spindle
The spindle is made of polished stainless steel, which is ideal for O-ring sealing.

Packing gland - REG-SA and REG-SB
The "full temperature range" packing gland ensures perfect tightness in the whole range: –60/+150°C (–76/+302°F). The packing glands are equipped with a scraper ring to prevent penetration of dirt and ice.

Installation
Install the valve with the spindle up or in horizontal position. The flow must be directed towards the cone.

The valve is designed to withstand high internal pressure. However, the piping system in general should be designed to avoid liquid traps and reduce the risk of hydraulic pressure caused by thermal expansion.

For further information refer to product instruction for REG-SA and REG-SB.

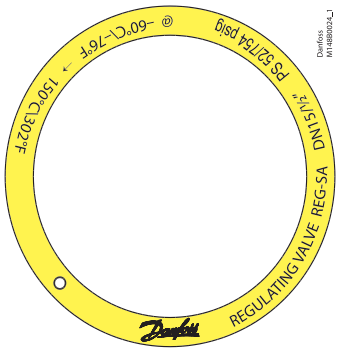

Example of marking ring, REG-SA

Pressure Equipment Directive (PED)
REG valves are approved according to the European standard specified in the Pressure Equipment Directive and are CE marked.

REG-SA and REG-SB valves		
Nominal bore	DN = < 25 mm (1 in.)	DN32-65 mm (1¼ - 2½ in.)
Classified for	Fluid group I	
Category	Article 3, paragraph 3	II

Computation and selection

Introduction
In refrigeration plants, regulating valves are primarily used in liquid lines in order to regulate the flow of refrigerant. The valves can, however, also be used as expansion valves. From a calculation point of view the two fields of application are very different.

Normal flow is the term used to describe the general case where the flow through the valve is proportional to the square root of the pressure drop across it and inversely proportional to the density of the refrigerant (Bernouillis equation).

This relationship between mass flow, pressure drop and density satisfies the majority of all valve applications with refrigerants and brines.

Normal flow is characterised by turbulent flow through the valve without any phase change. The following capacity curves are based on the above mentioned assumption.

Application of the regulating valves outside the normal flow area will reduce the capacity of the valve considerably. In such cases it is recommended to use "DIRcalc™" (Danfoss Industrial Refrigeration calculation programme).

Location of valve in system (marked with grey)

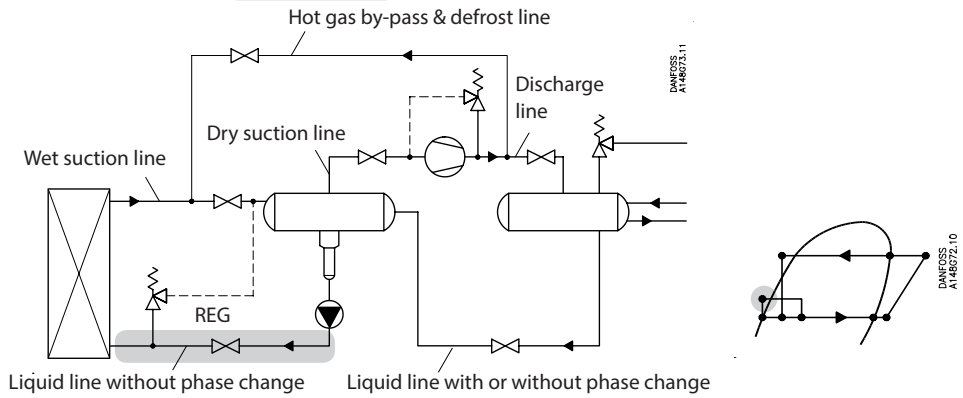

Sizing regulating valve for liquid flow
Liquid refrigerants: Use the liquid tables, fig. 6 - 10. For other refrigerants and brines, "Normal flow" (Turbulent flow); see below and use the flow coefficient tables (fig. 1 - 5).

SI-units

Mass flow:

$$k_v = \frac{G}{\sqrt{\rho \times 1000 \times \Delta p}} = G \times C_A \, [m^3/h]$$

Volume flow:

$$k_v = \frac{\dot{V}}{\sqrt{\frac{1000 \times \Delta p}{\rho}}} \, [m^3/h]$$

Imperial units

Mass flow:

$$C_v = \frac{0.95 \times G}{\sqrt{\rho \times \Delta p}} = 31.6 \times G \times C_A \, [USgal/min.]$$

Volume flow:

$$C_v = \frac{0.127 \times \dot{V}}{\sqrt{\frac{\Delta p}{\rho}}} \, [USgal/min.]$$

k_v	[m³/h]	Quantity [m³/h] of water flowing through a valve at a pressure loss of 1 bar (according to VDE/VDI Norm 2173).
P_1	[bar]	Pressure before the valve (upstream).
P_2	[bar]	Pressure after the valve (downstream).
Δp	[bar]	Actual pressure loss across the valve (P_1–P_2).
G	[kg/h]	Mass flow through the valve.
$\dot{V}$	[m³/h]	Volume flow through the valve.
ρ	[kg/m³]	Density of the refrigerant before the valve.
C_A		Calculation factor (fig. 11).

C_v	[US gal/min]	Quantity [US gal/min] of water flowing through a valve at a pressure loss of 1 psi.
P_1	[psi]	Pressure before the valve (upstream).
P_2	[psi]	Pressure after the valve (downstream).
Δp	[psi]	Actual pressure loss across the valve (P_1–P_2).
G	[lb/min]	Mass flow through the valve.
$\dot{V}$	[US gal/min]	Volume flow through the valve.
ρ	[lb/ft³]	Density of the refrigerant before the valve
C_A		Calculation factor (fig. 11).

Computation and selection

Flow coefficient

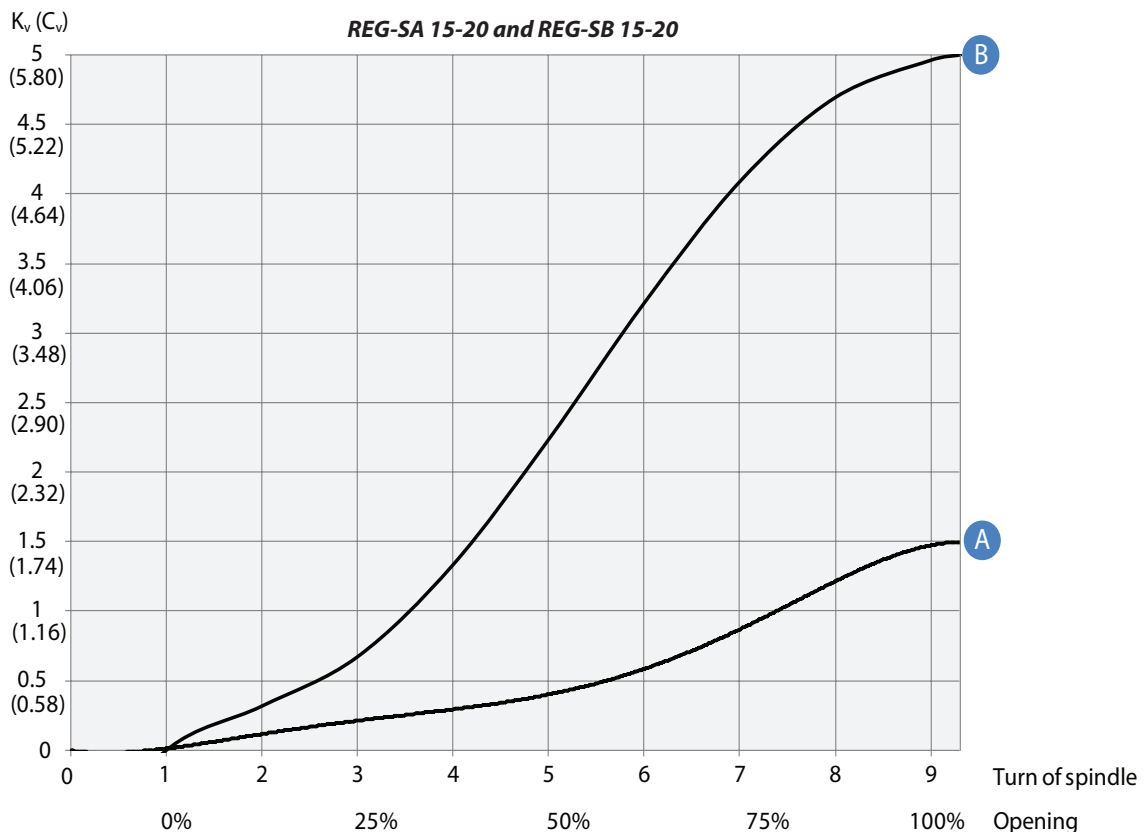

Fig. 1

Flow coefficient

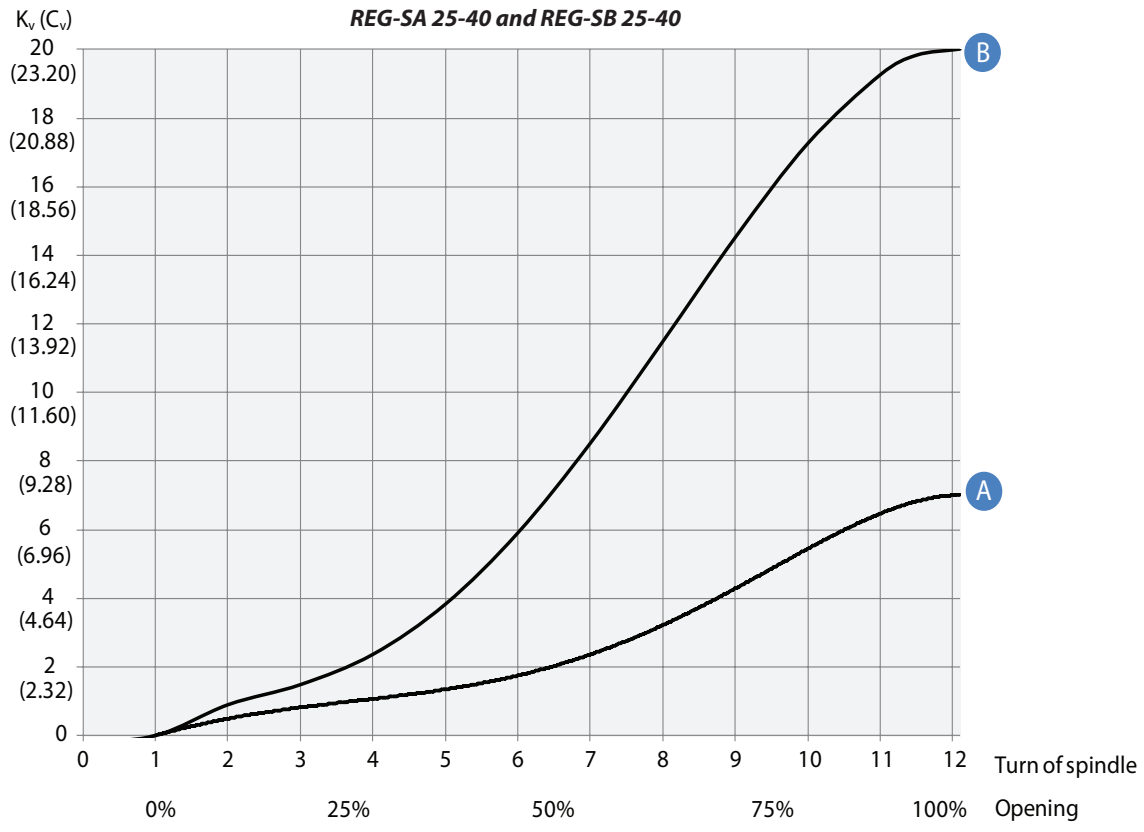

Fig. 2

Computation and selection *(Continued)*

Flow coefficient

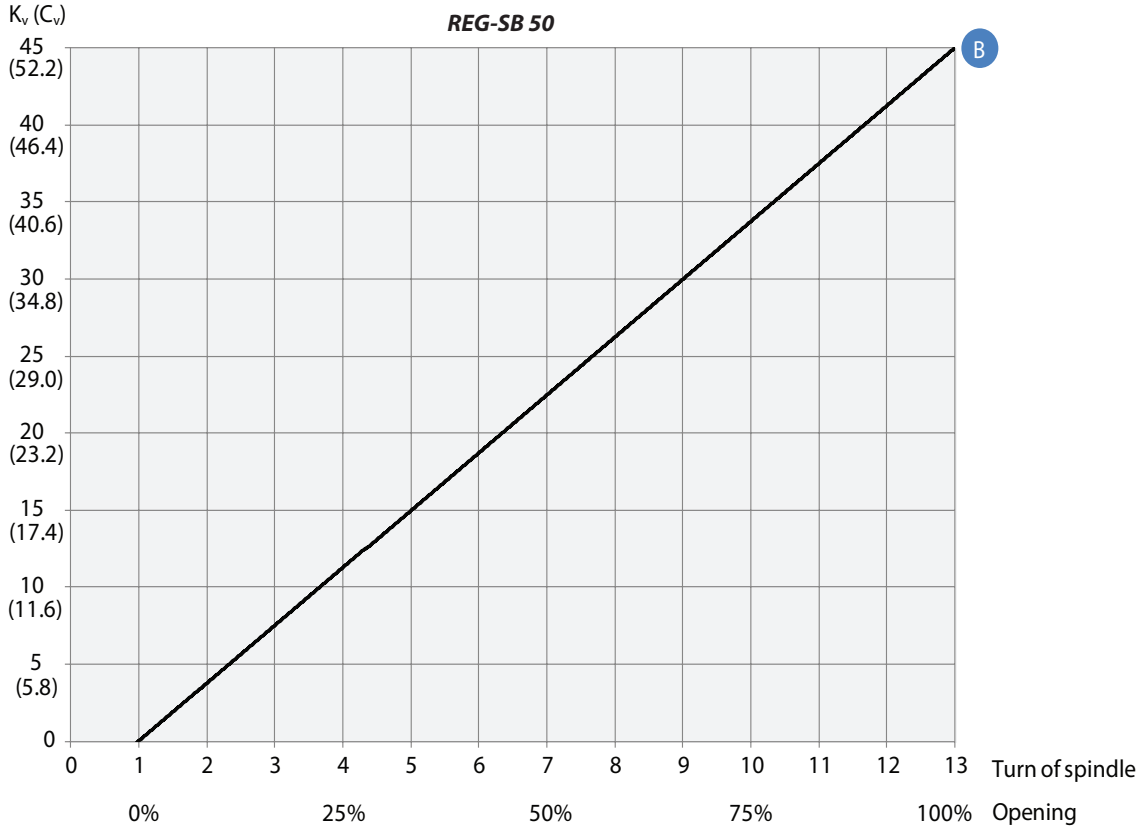

Fig. 3

Flow coefficient

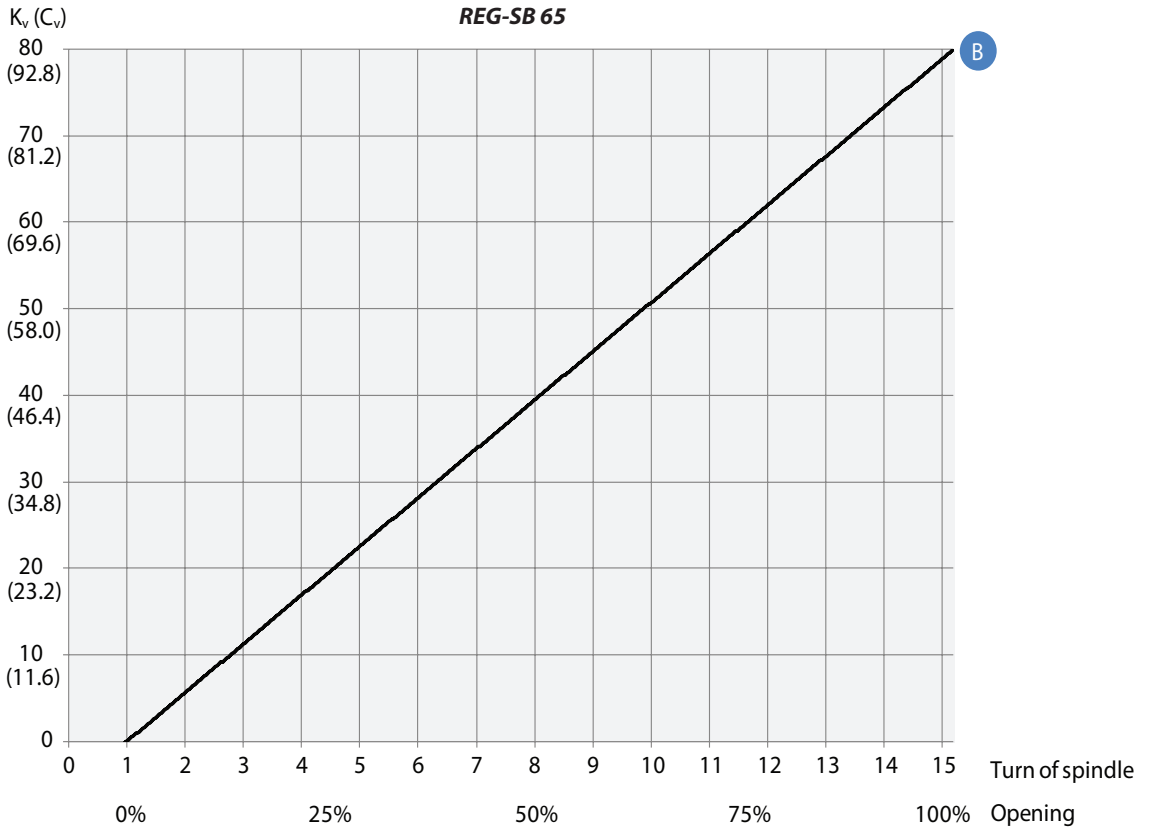

Fig. 4

Computation and selection
(Continued)

Liquid R 717, density: 670 kg/m³ [42 lb/ft³]

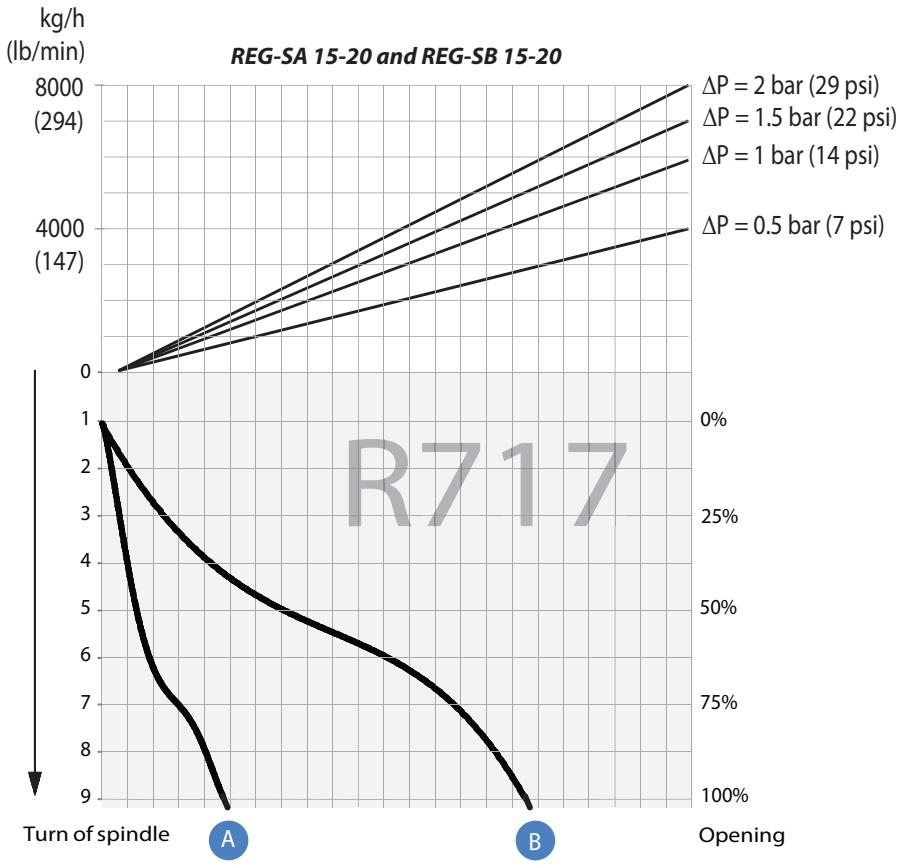

Fig. 5

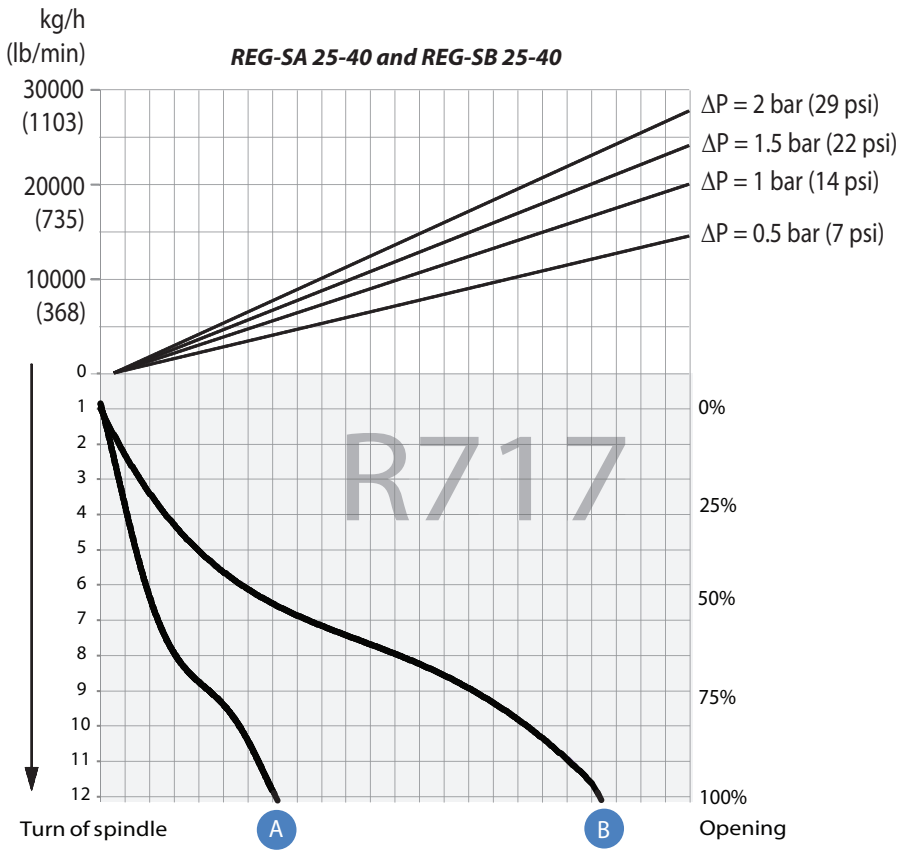

Fig. 6

For choice of valve size and connection see "Connections".

Computation and selection
(Continued)

Liquid R 717, density: 670 kg/m³ [42 lb/ft³]

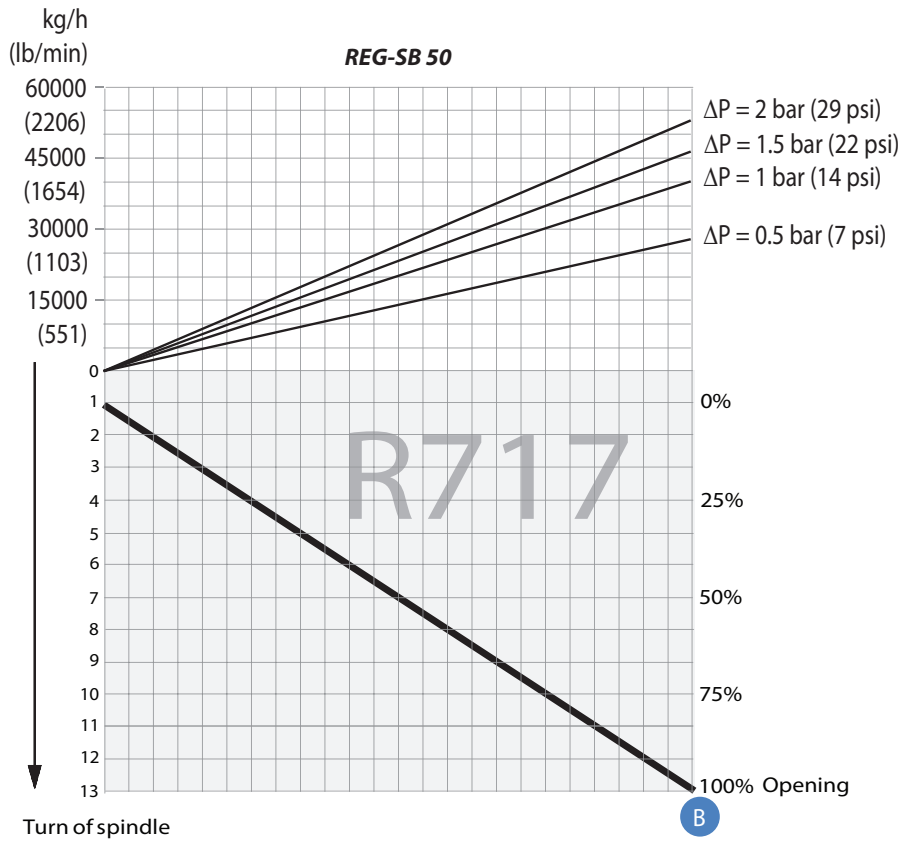

Fig. 7

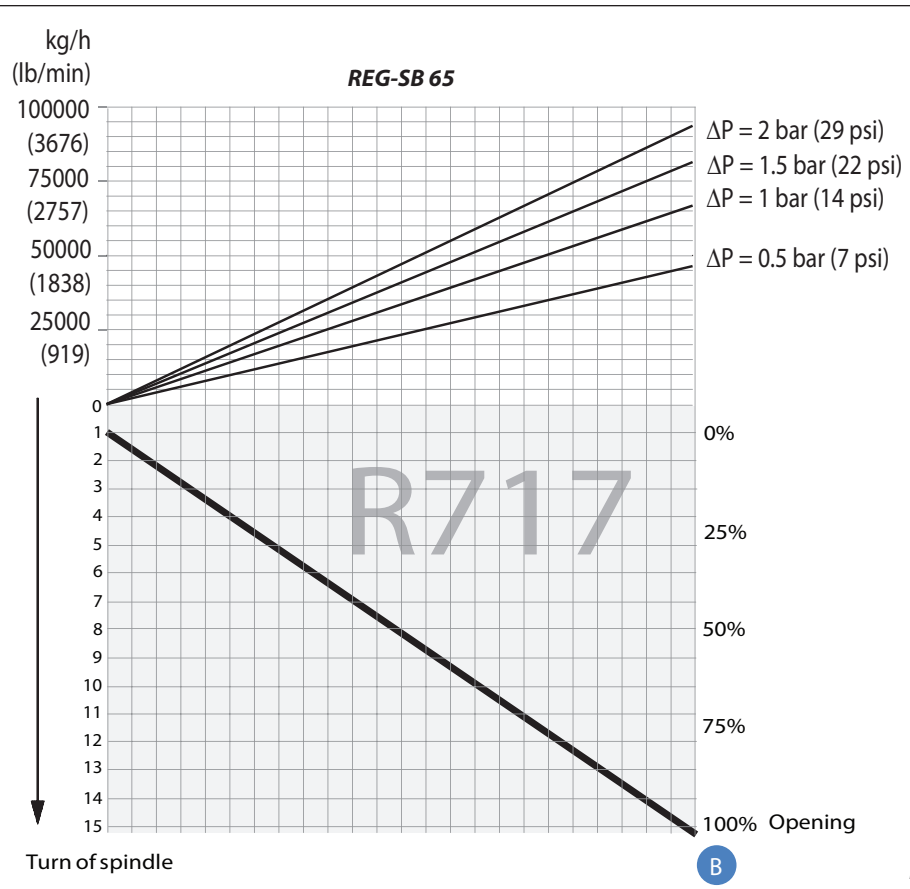

Fig. 8

For choice of valve size and connection see "Connections".

Computation and selection
(Continued)

Liquid R 717, density: 670 kg/m³ [42 lb/ft³]

Calculation factor C_A

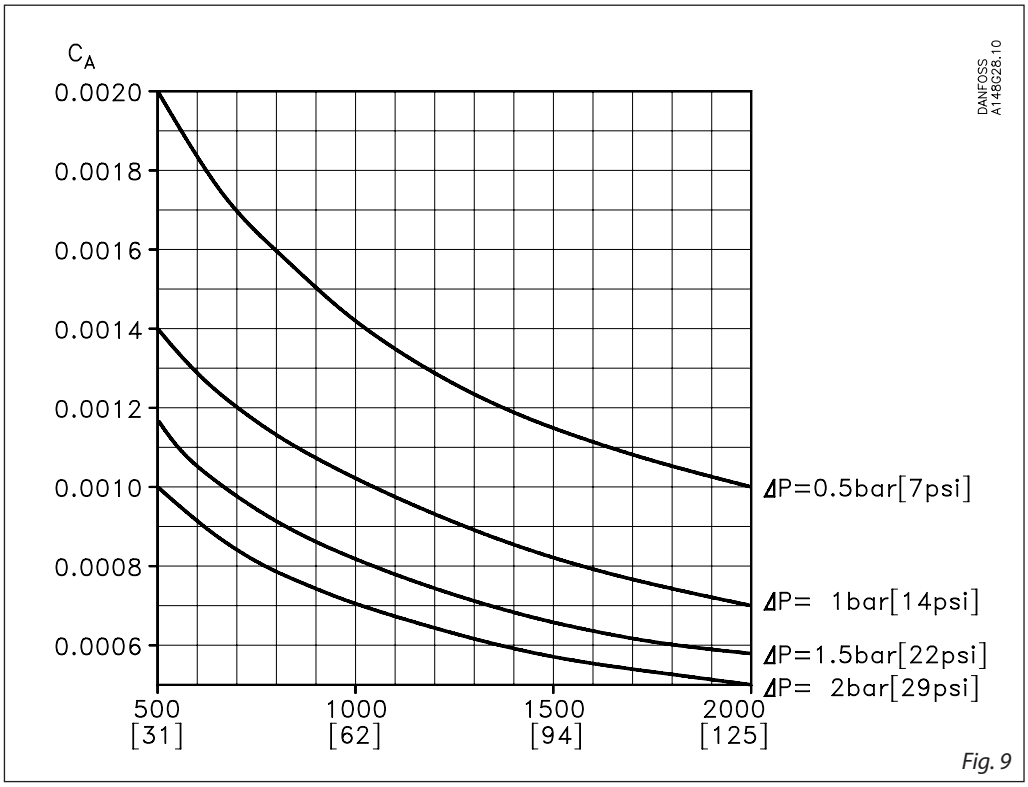

Fig. 9

For choice of valve size and connection see "Connections".

Computation and selection
Example 1.

Refrigerant: R 717
Refrigerant flow: 2200 kg/h
Pressure drop: Δp = 0.5 bar

The above mentioned example is illustrated on the following flow rate diagram and shows that REG-SB 15 and 20 with cone B can be used. The main rule is that nominal regulation range should be below 85% opening degree. If the arrowline is crossing 2 cone curves, the smaller cone should be selected if opening degree < 85%.

The example is only correct if the density of the refrigerant is approx. 670 (kg/m³), and there must be no build-up of flash gas in the valve.

Flow rate diagram

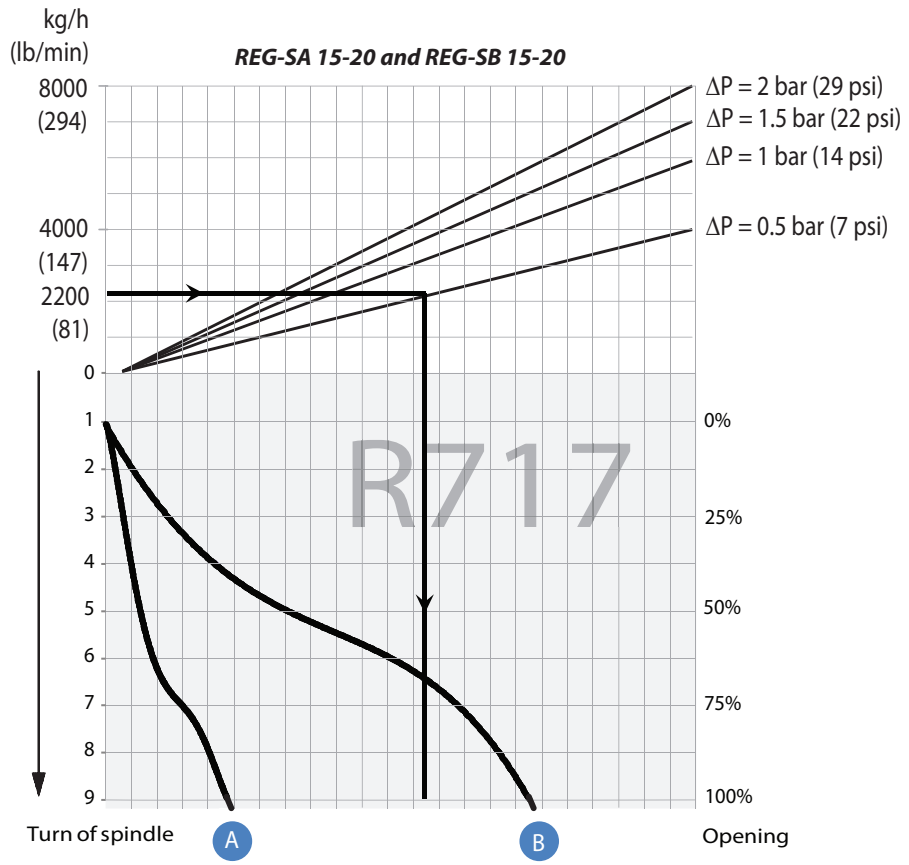

Fig. 10

Computation and selection
Example 2.

Brine, density	ρ:	1150	[kg/m³]
Brine flow	G:	2,700	[kg/h]
Pressure drop	Δp:	0.5	[bar]

In this example it is not possible to use the selection diagrams (fig. 5 - 8) as the refrigerant in question is not included.

Use the curves of the k_v-values instead (fig. 1 - 4) and calculate the required k_v by means of the formulas in the "Introduction" passage at the beginning of this chapter. Alternatively calculate the k_v-values by means of the calculation factor C_A (fig. 11) and the flow rate diagram (in this example: fig. 12) as per the following calculation example.

Calculation example:

Required k_v-value
C_A = 0.00132 (from fig. 18)
k_v = $C_A \times G$
k_v = 0.00132 × 2,700 [kg/h]
= 3.56 [m³/h]

Calculation factor C_A

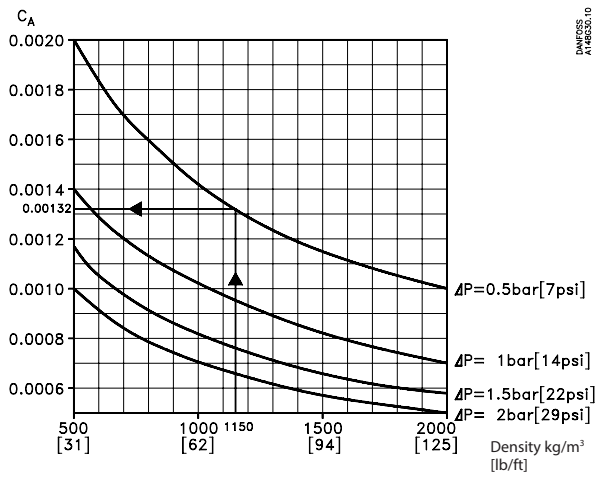

Fig. 11

Flow rate diagram

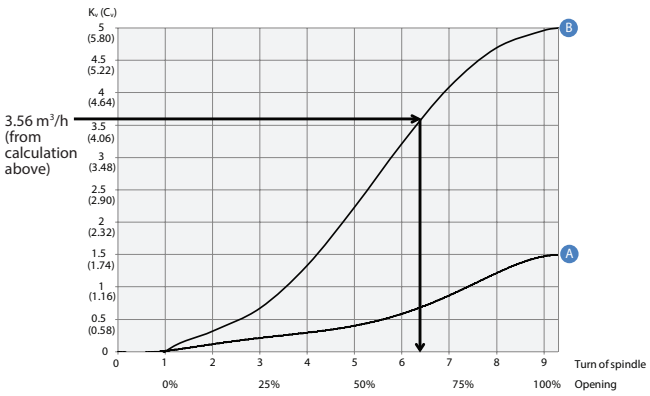

Fig. 12

REG-SB 15 and REG-SB 20 with cone B can be used.

Material specification

REG-SA and REG-SB 15 - 40

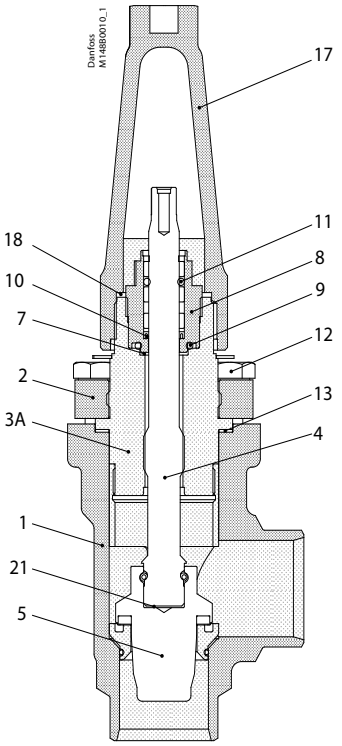

REG-SA and REG-SB 50 - 65

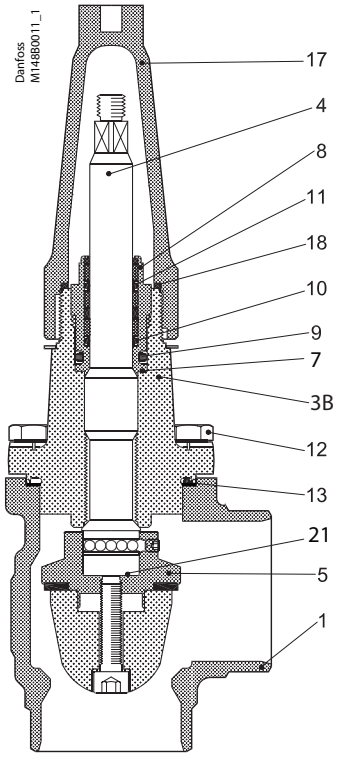

No.	Part	Material	EN	ISO	ASTM
1	Housing	Steel	G20Mn5QT, 10213-3 ---------- P285QH+QT, 10222-4		LCC, A352 ---------- LF2, A350
2	DN 15 - 40 (½ - 1½ in.) – Bonnet, Flange	Steel	P275NL1 or 2 EN10028-3		A, A662
3A	DN 15 - 40 ($^3/_8$ - 1½ in.) – Bonnet, Insert	Steel	11SMn30 10087	Type 2, R 683-9	1213 SAE J403
3B	DN 50 - 65 (2 - 2½ in.) – Bonnet, Flange	Steel	P285QH+QT 10222-4		LF2 A350
4	Spindle DN 15 - 65 (¼ - 2½ in.)	Stainless steel	X8CrNiS 18-9, 17440	Type 17, 683/13	AISI 303
5	Cone	Steel			
7	Packing washer	Aluminium			
8	Packing gland	Stainless Steel	X8CrNiS 18-9, 10088	Type 17, 683/13	AISI 303
9	O-ring	Cloroprene (Neoprene)			
10	Spring loaded Teflon ring	PTFE			
11	O-ring	Cloroprene (Neoprene)			
12	Bolts	Stainless steel	A2-70	A2-70	Type 308
13	Gasket	Fiber, non asbestos			
14	Bottom insert	Steel			
17	Seal cap	Aluminium			
18	Gasket f. seal cap	Nylon			
19	Locking nut	Steel			
20	Screw	Steel			
21	Disk spring	Steel			

Dimensions and weights

REG-SA and REG-SB 15 - 65 in angleway version

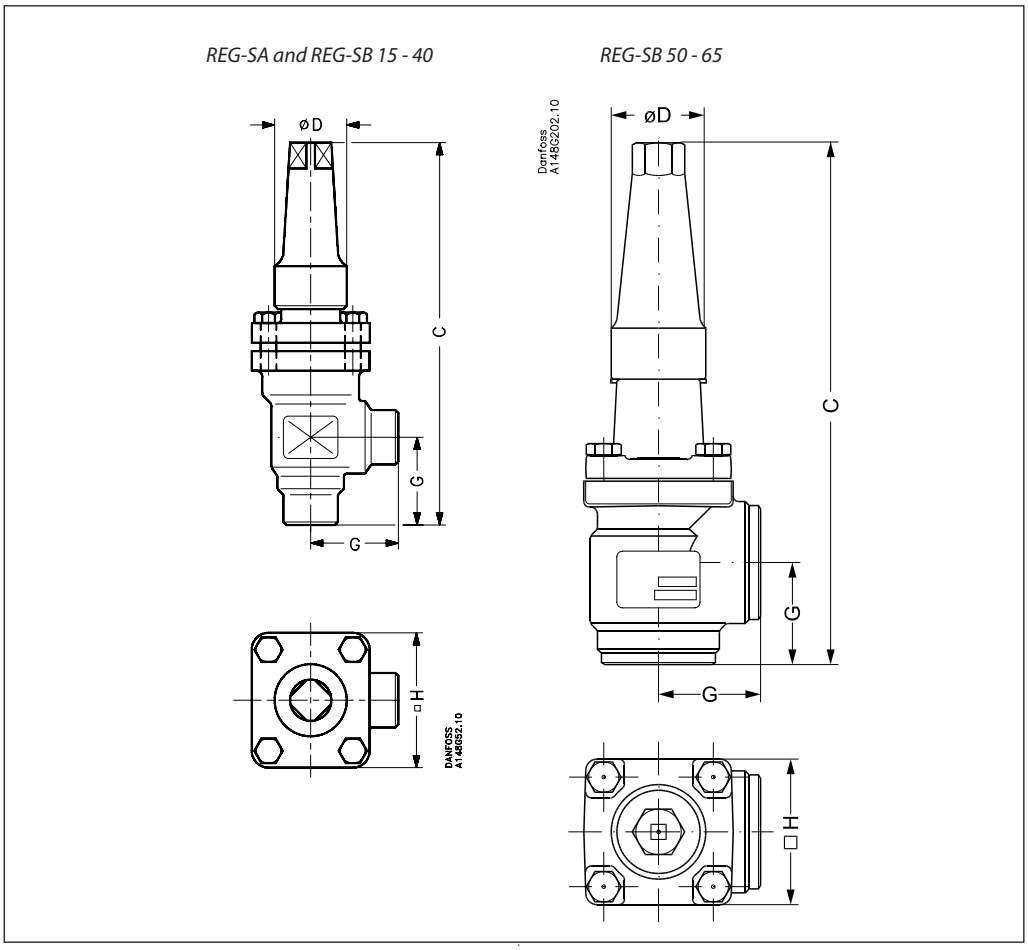

Valve size			C		G		∅D		□H		Weight
REG-SA/SB 15-20	mm		182		45		38		60		1.4 kg
REG-SA/SB (½-3/4)	in.		7.17		1.77		1.50		2.36		3.1 lb
REG-SA/SB 25-40	mm		237		55		50		70		2.4 kg
REG-SA/SB (1-1½)	in.		9.33		2.17		1.97		2.76		5.3 lb
REG-SB 50	mm		315		60		50		77		3.2 kg
REG-SB (2 in.)	in.		12.4		2.36		1.97		3.03		7.1 lb
REG-SB 65	mm		335		70		50		90		4.8 kg
REG-SB (2½ in.)	in.		13.19		2.76		1.97		3.54		10.6 lb
REG-SA/SB 32 SOC	mm		275		62		50		70		2.9 kg
REG-SA/SB (1¼ in.) SOC	in.		10.83		2.44		1.97		2.76		6.4 lb
REG-SA/SB 40 SOC	mm		275		62		50		70		2.9 kg
REG-SA/SB (1½ in.) SOC	in.		10.83		2.44		1.97		2.76		6.4 lb
REG-SB 50 SOC	mm.		320		65		50		77		4.1 kg
REG-SB (2 in.) SOC	in.		12.60		2.56		1.97		3.03		9.0 lb

Specified weights are approximate values only.

Dimensions and weights
(cont.)

REG-SA and REG-SB 15 - 65 in straightway version

REG-SA and REG-SB 15 - 40

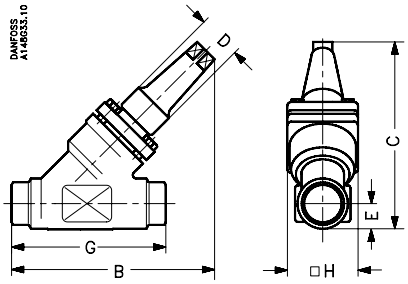

REG-SB 50-65

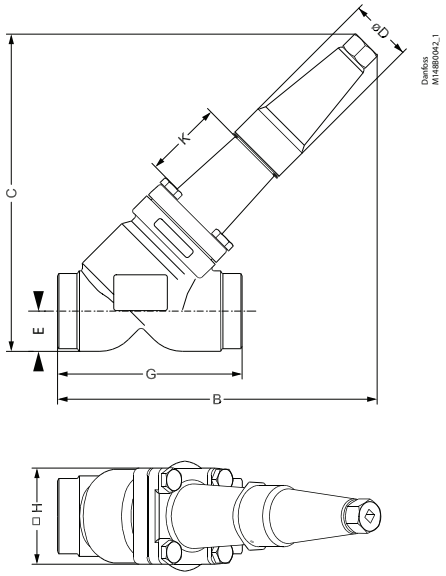

Valve size		C	B	E	G		∅D		□H		Weight
REG-SA/SB 15-20	mm	145	155	20	120		38		60		2.0 kg
REG-SA/SB (½-³/₄)	in.	5.71	6.10	0.79	4.72		1.50		2.36		4.4 lb
REG-SA/SB 25-40	mm	200	215	26	155		50		70		3.0 kg
REG-SA/SB (1-1½)	in.	7.87	8.46	1.02	6.10		1.97		2.76		6.6 lb
REG-SB 50	mm	257	250	32	148		50		77		4.2 kg
REG-SB (2 in.)	in.	10.12	10.20	1.26	5.83		1.97		3.03		9.3 lb
REG-SB 65	mm	280	284	40	176		50		90		6.3 kg
REG-SB (2½ in.)	in.	11.02	11.18	1.57	6.93		1.97		3.54		13.9 lb
REG 32 SOC	mm	209	222	27.4	155		50		70		3.0 kg
REG (1¼) SOC	in.	8.23	8.74	1.08	6.10		1.97		2.76		6.6 lb
REG 40 SOC	mm	213	222	31.0	155		50		70		3.0 kg
REG (1½) SOC	in.	8.39	8.74	1.22	6.10		1.97		2.76		6.6 lb
REG-SB 50 SOC	mm	261	266	37	162		50		77		5.1 kg
REG-SB (2 in.) SOC	in.	10.28	10.47	1.26	6.38		6.38		3.03		11.2 lb

Specified weights are approximate values only.

Ordering REG-SA/SB from the parts programme

Example
(select from table 1 and 2)

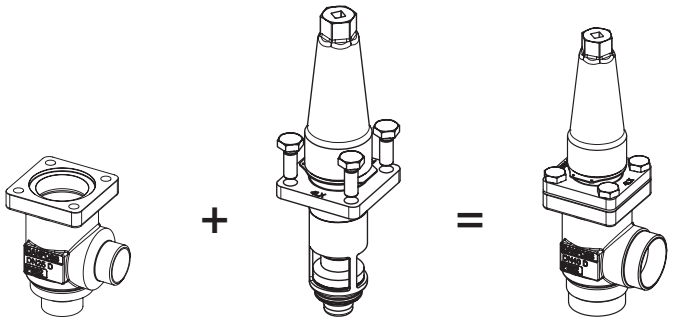

Valve housing, size 25 (1 in.), butt weld F, angleway,
148B6416
Table 1

Top part, REG-SA size 25 (1 in.)
148B5480
Table 2

Table 1
SVL valve housings w/different connections

		DN 15-65 mm (½ - 2½ in.)	*DN 80-125 mm (3 - 5 in.)*
		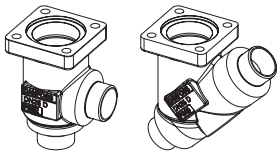	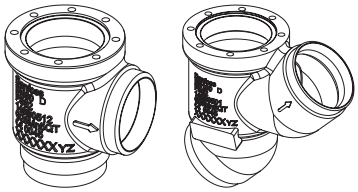
Sizes [DN]		**Valve Housing SVL**	
		Butt weld F	
mm	**in.**	**ANG**	**STR**
15	½	**148B6414**	**148B6424**
20	¾	**148B6415**	**148B6425**
25	1	**148B6416**	**148B6426**
32	1¼	**148B6417**	**148B6427**
40	1½	**148B6418**	**148B6428**
50	2	**148B6419**	**148B6429**
65	2½	**148B6420**	**148B6430**

Table 2
SVA complete top part including gaskets and bolts

		REG-SA/SB 15-65		REG-LA/LB 15-40	
		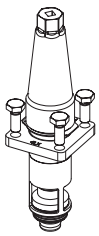		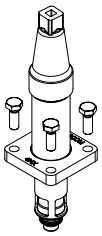	
Sizes [DN]		**Complete top part**			
mm	**in.**	**REG-SA**	**REG-SB**	**REG-LA**	**REG-LB**
15	½	**148B5280**	**148B5281**	**148B6401**	**148B6402**
20	¾				
25	1	**148B5480**	**148B5481**	**148B6403**	**148B6404**
32	1¼				
40	1½				
50	2		**148B5734**		
65	2½		**148B5824**		

Danfoss can accept no responsibility for possible errors in catalogues, brochures and other printed material. Danfoss reserves the right to alter its products without notice. This also applies to products already on order provided that such alterations can be made without subsequential changes being necessary in specifications already agreed.
All trademarks in this material are property of the respective companies. Danfoss and the Danfoss logotype are trademarks of Danfoss A/S. All rights reserved.