RS485 Configuration Requirements with Various Component Combinations

Configuration #1.
ZX software is 10.nn
NC25 software is:
31.nn .....LED display
41.nn .....2-line LCD display
42.nn .....4-line LCD display
44.nn .....Dunham-Bush units
2-line LCD display

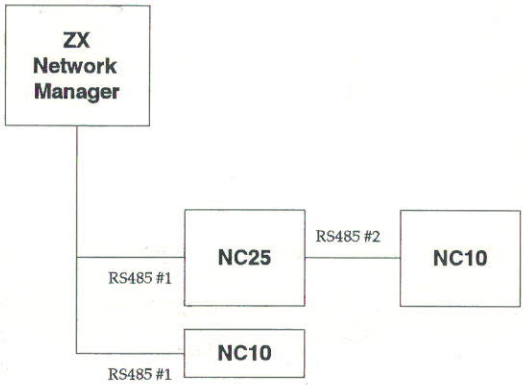

Configuration #2.
NC25 software is 40.nn

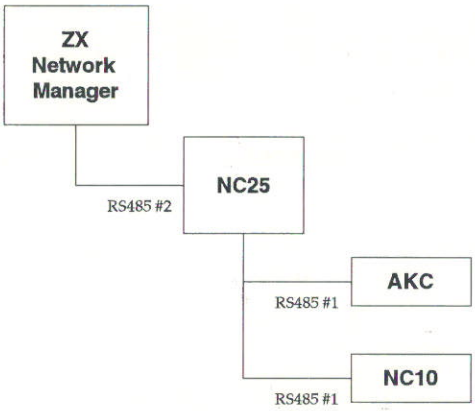

Configuration #3.
NC25 software is 40.nn

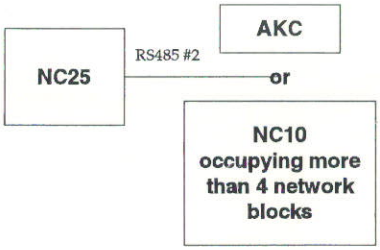

Configuration #1.
ZX software is 10.nn
NC25 software is:
31.nn .....LED display
41.nn .....2-line LCD display
42.nn .....4-line LCD display
44.nn .....Dunham-Bush units
2-line LCD display

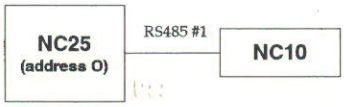

[485CFG.CHT]
07/29/93

NC25-4 Trouble-shooting Chart 1
RS485 Bus #1

Copyright 1993 Danfoss Inc.

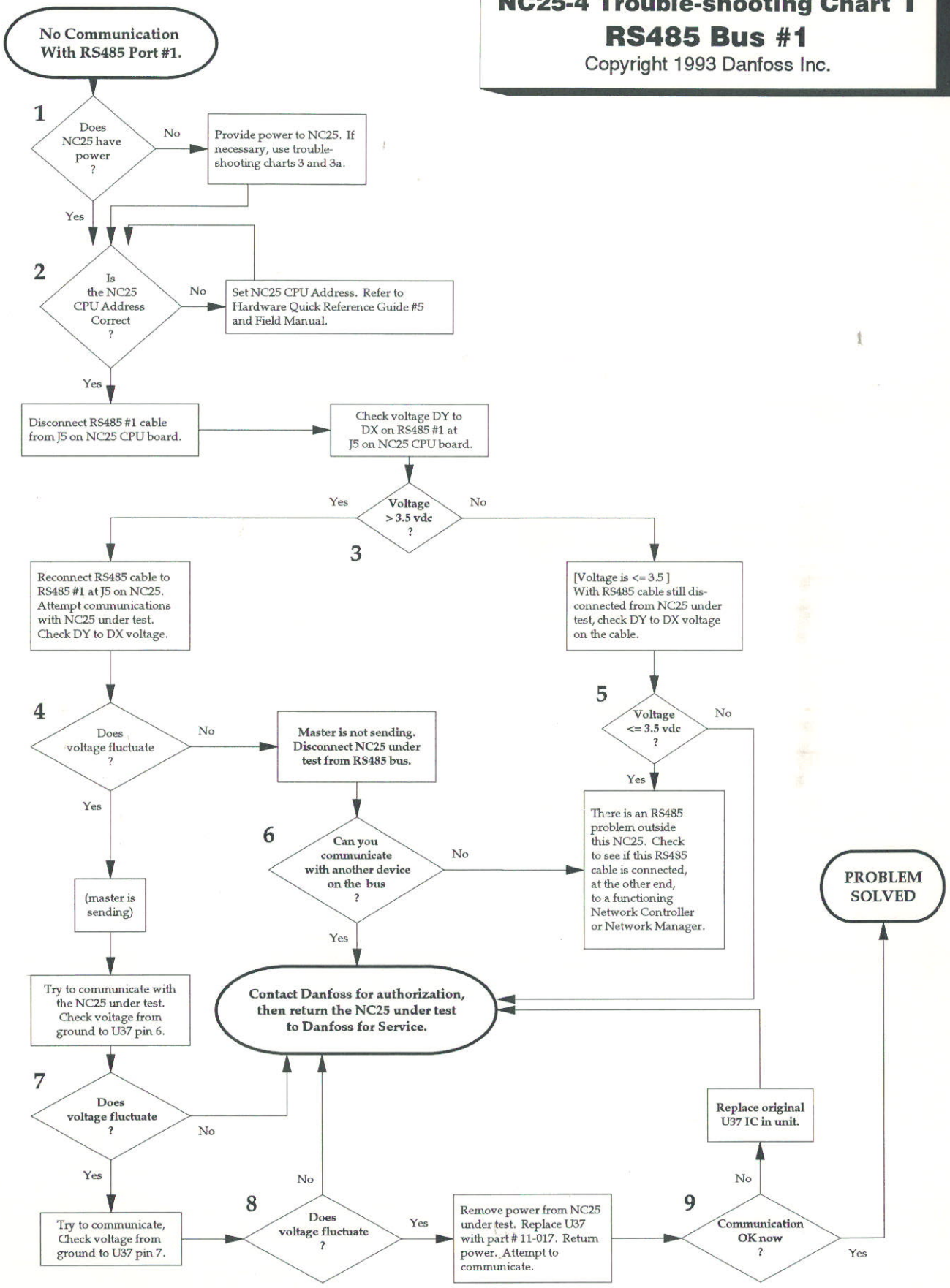

[4851.CHT]
07/29/93

NC25-4 Trouble-shooting Chart 2
RS485 Bus #2

Copyright 1993 Danfoss Inc.

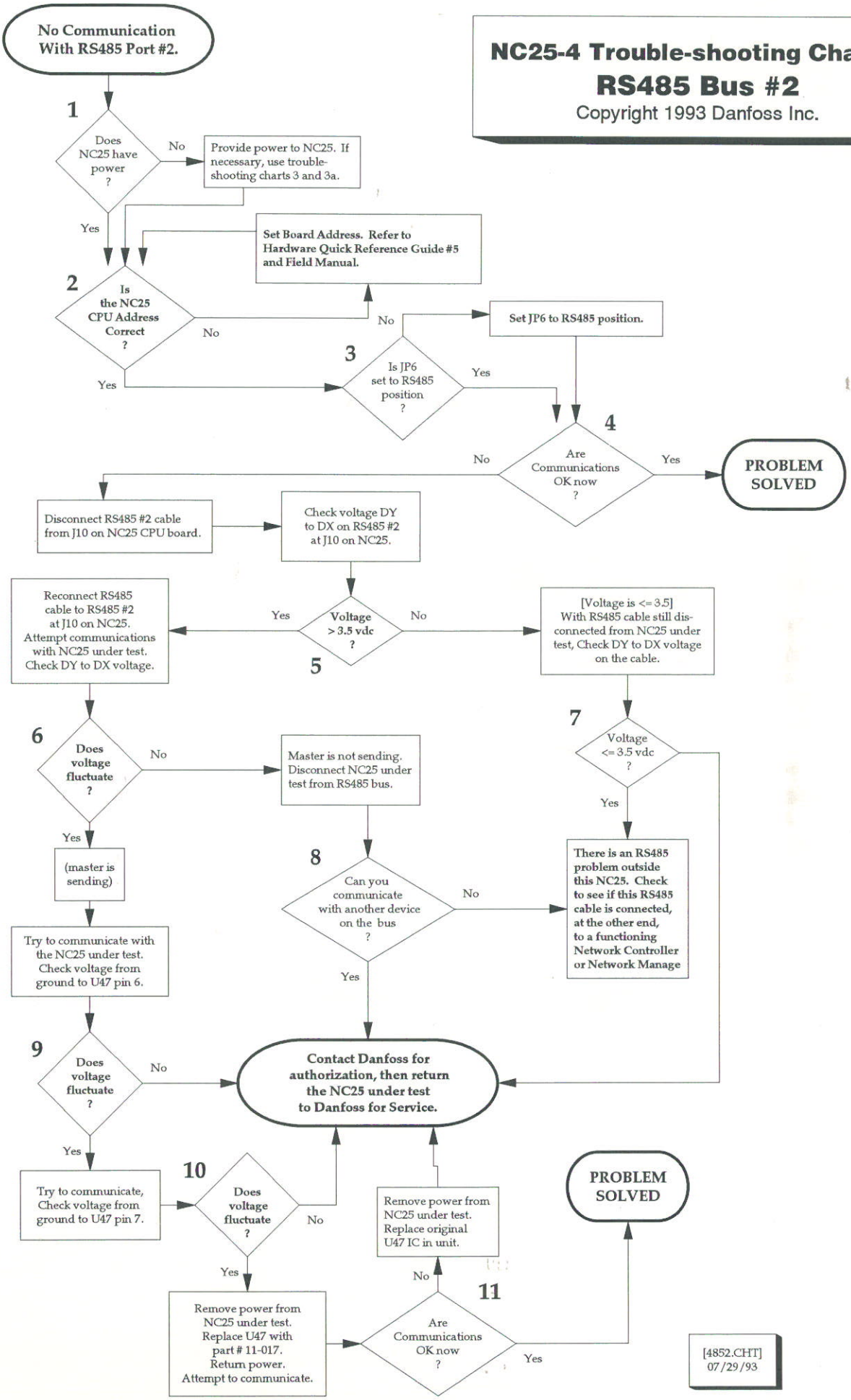

[4852.CHT]
07/29/93

NC25-4 Trouble-shooting Chart 3
12 volt DC Power Supply

Copyright 1993 Danfoss Inc.

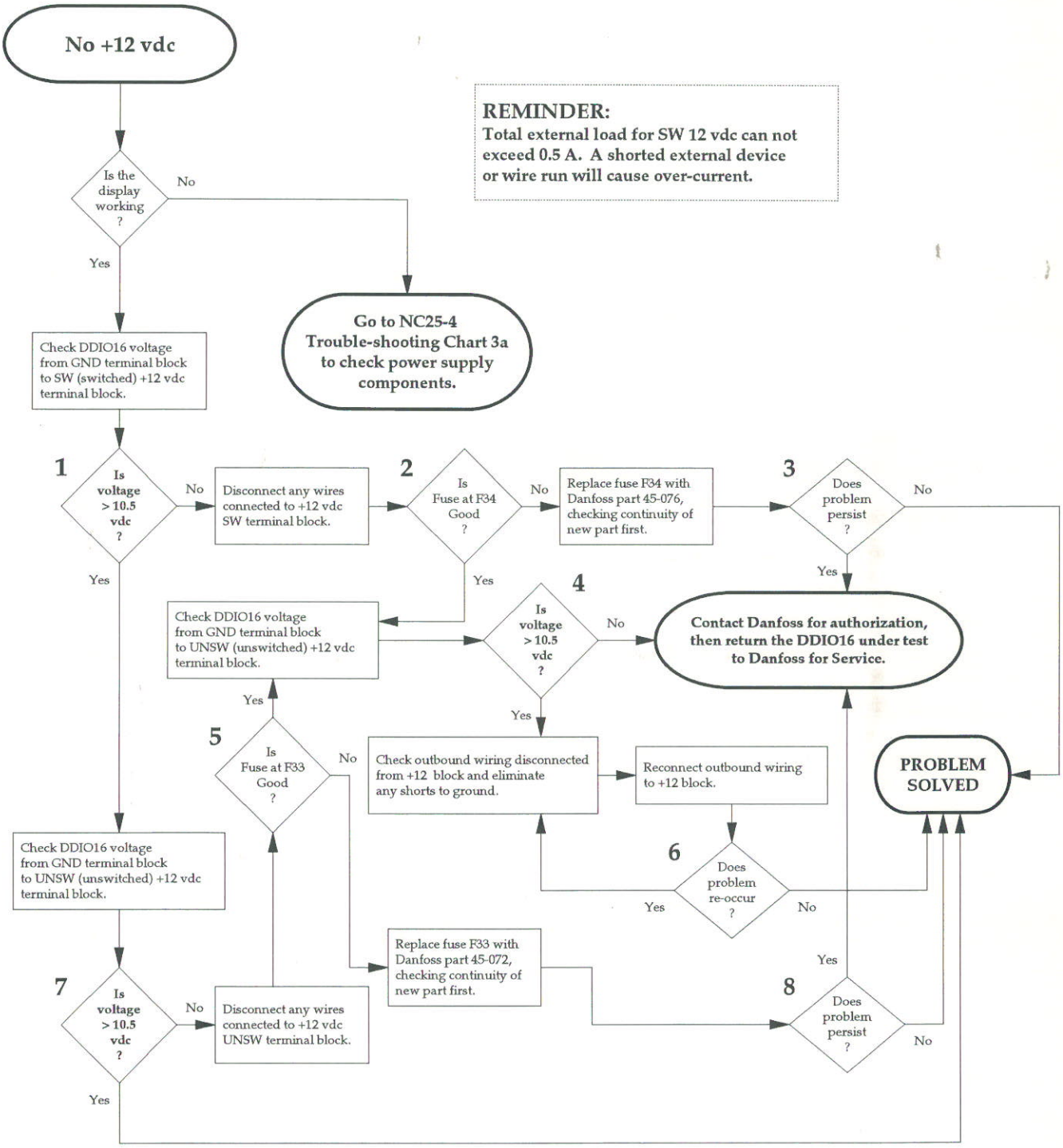

NC25-4 Trouble-shooting Chart 3a
Main Power Supply

Copyright 1993 Danfoss Inc.

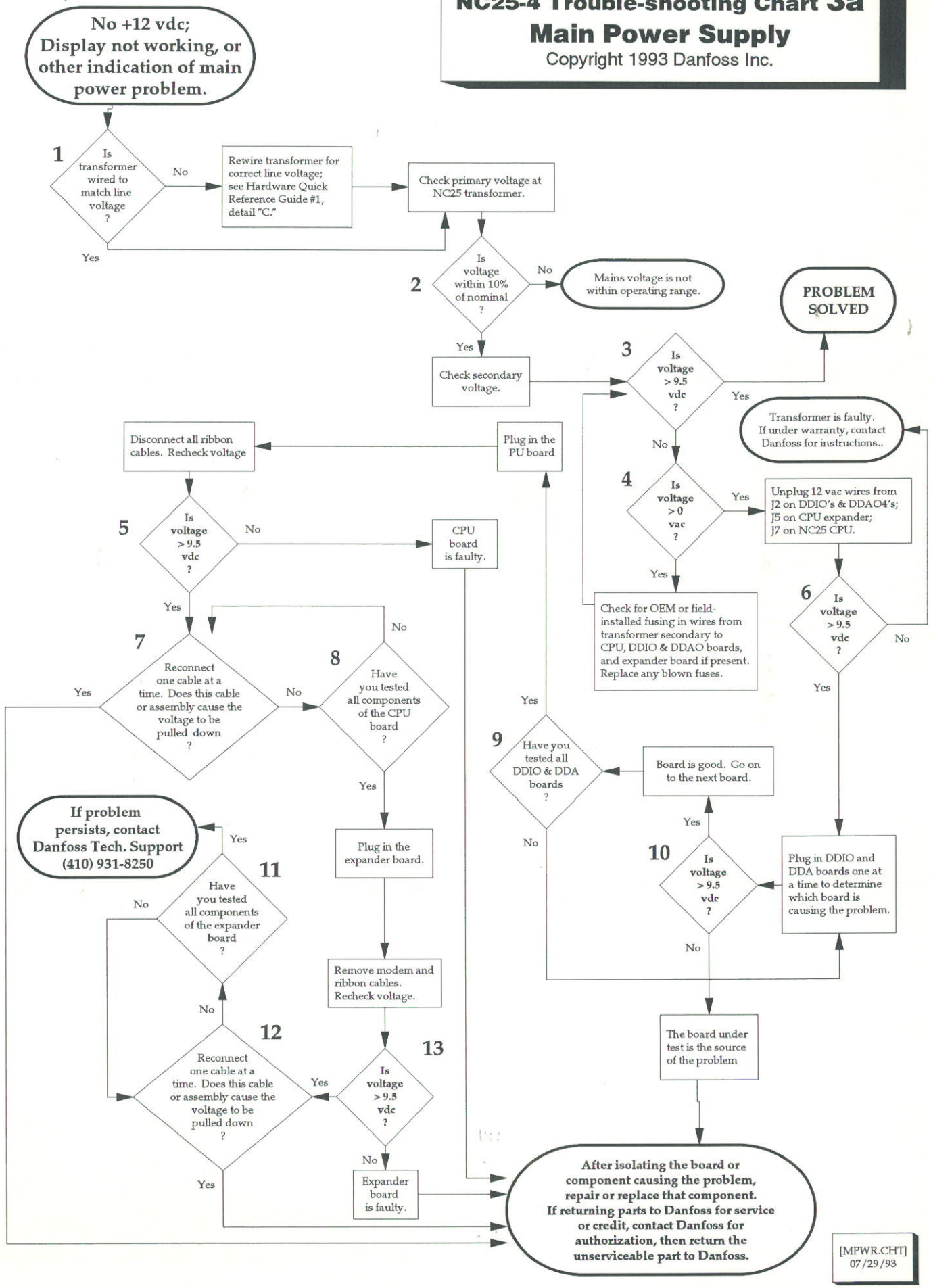

[MPWR.CHT]
07/29/93

NC25-4 Trouble-shooting Chart 4
Possible Database Corruption

Copyright 1993 Danfoss Inc.

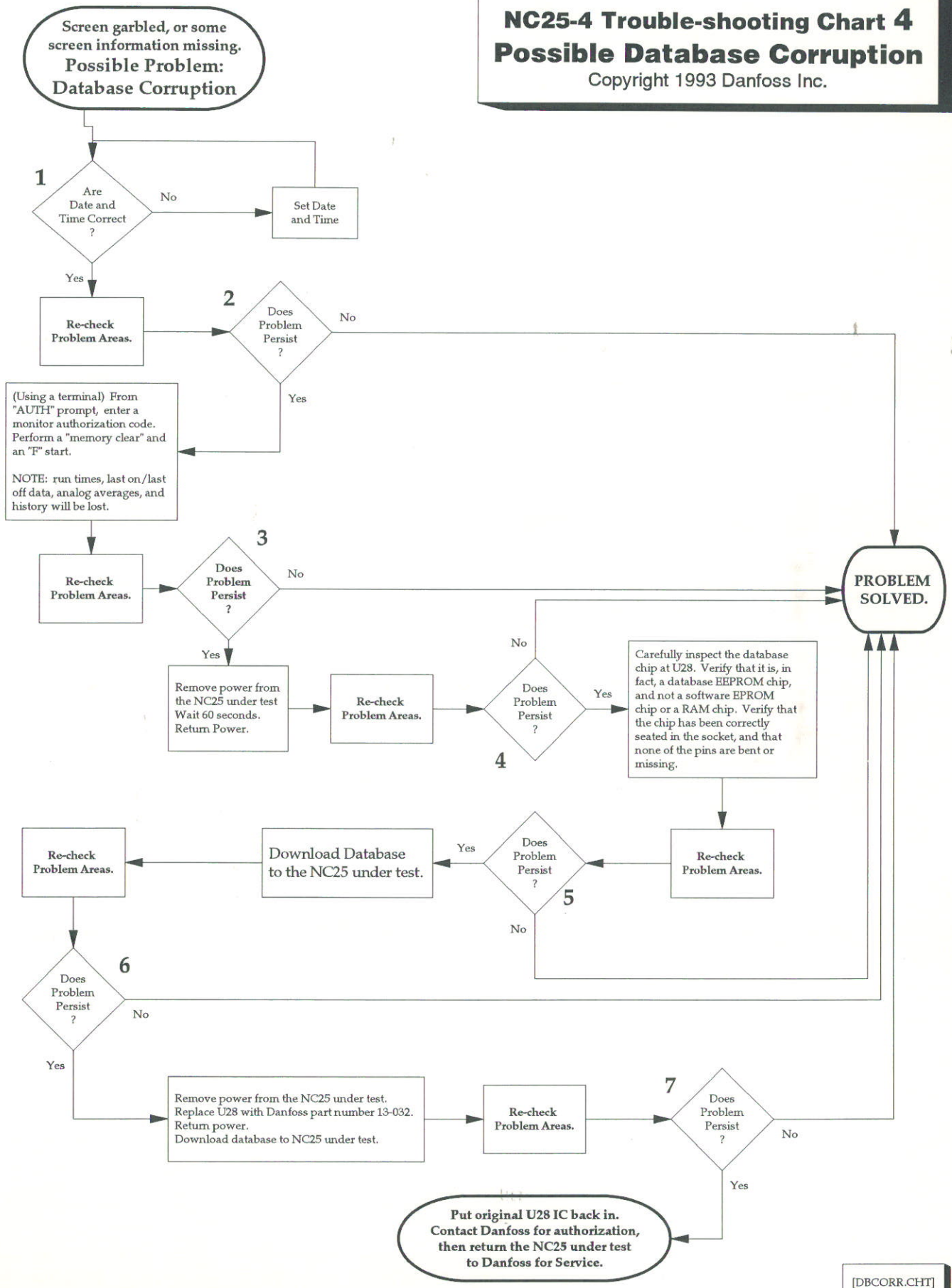

[DBCORR.CHT]
07/29/93

NC25-4 Trouble-shooting Chart 5
Improper Digital Input Function

Copyright 1993 Danfoss Inc.

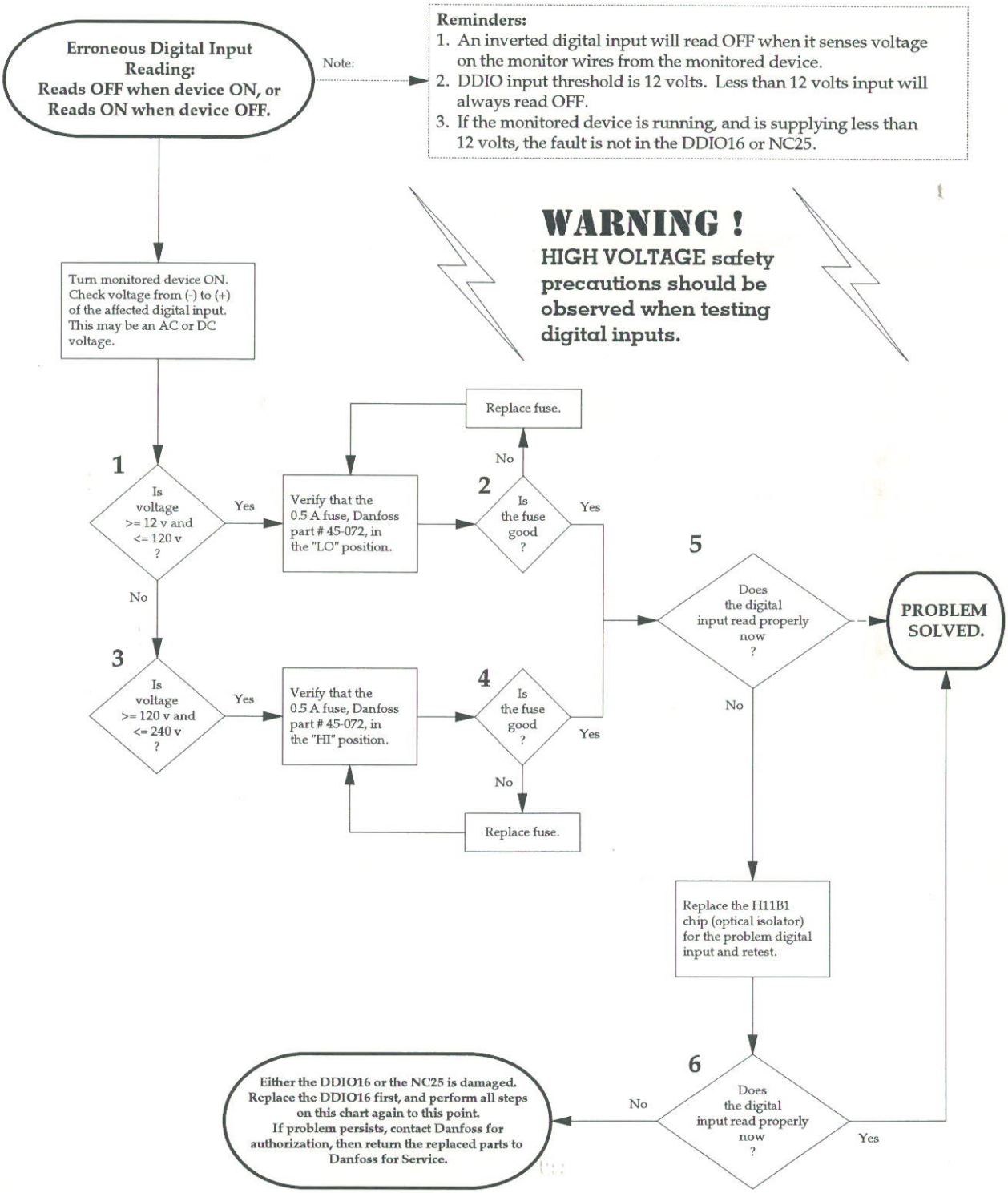

[DI.CHT]
07/29/93

TYPICAL NC25 DIGITAL INPUT CIRCUITRY

DDI014-DIGITAL INPUT SIGNALS

NO.	H11B1	NO.	H11B1
1	U7	8	U14
2	U8	9	U15
3	U9	10	U16
4	U10	11	U17
5	U11	12	U18
6	U12	13	U19
7	U13	14	U20

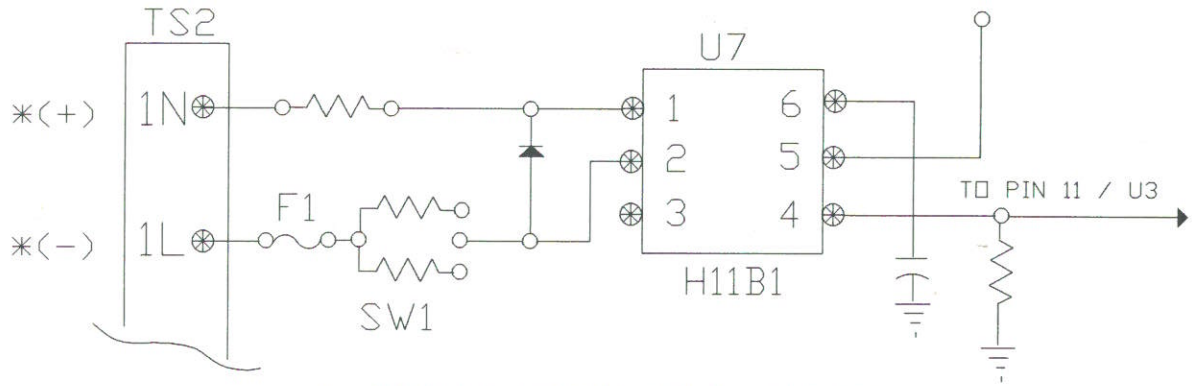

*( ) INDICATES POSITION FOR DC VOLTAGES.

DDI016-DIGITAL INPUT SIGNALS

NO.	H11B1	NO.	H11B1
1	U8	9	U16
2	U9	10	U17
3	U10	11	U18
4	U11	12	U19
5	U12	13	U20
6	U13	14	U21
7	U14	15	U22
8	U15	16	U23

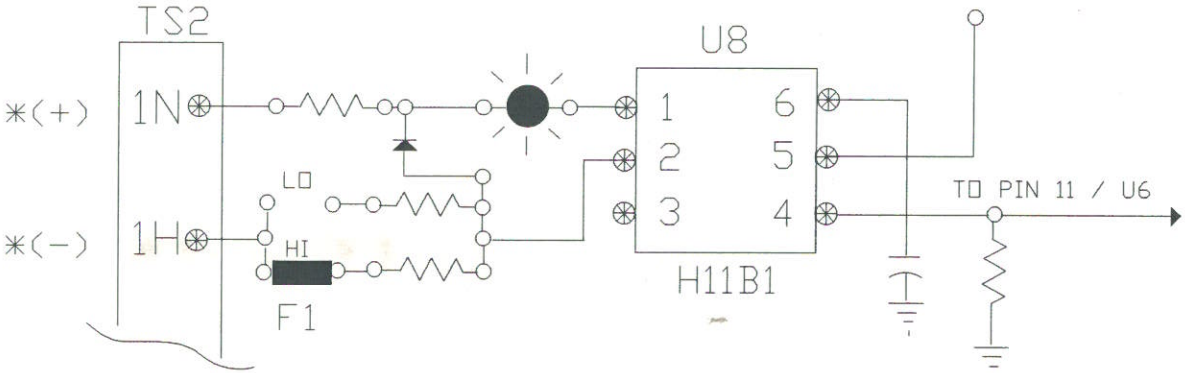

*( ) INDICATES POSITION FOR DC VOLTAGES.

H11B1 9-9-93

NC25-4 Trouble-shooting Chart 6
Improper Digital Output Function

Copyright 1993 Danfoss Inc.

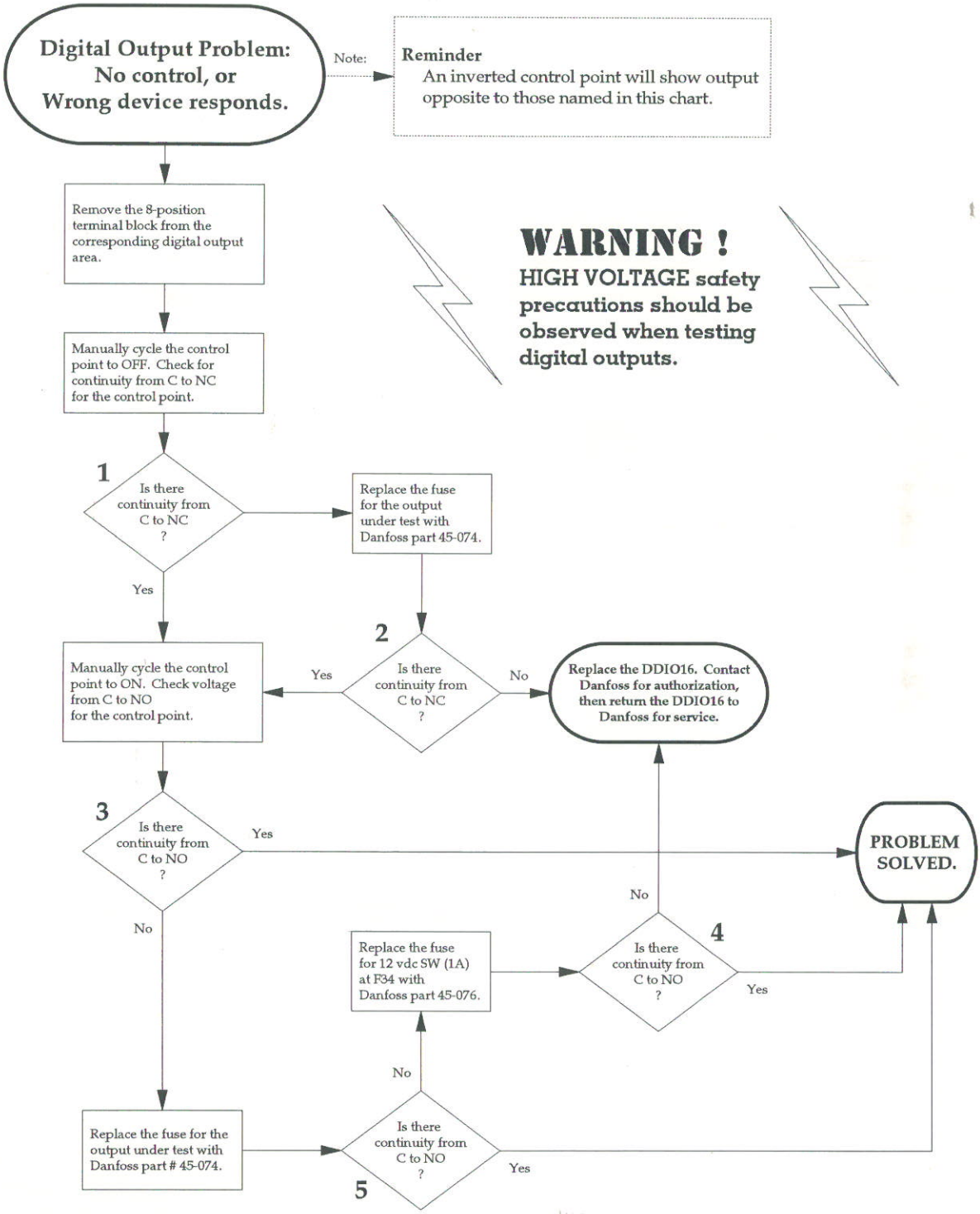

TYPICAL NC25 DIGITAL OUTPUT CIRCUITRY

DDIO14-DIGITAL OUTPUT SIGNALS

NO.	2003	IN/OUT	NO.	2003	IN/OUT
1	U5	1/16	8	U6	1/16
2	U5	2/15	9	U6	2/15
3	U5	3/14	10	U6	3/14
4	U5	4/13	11	U6	4/13
5	U5	5/12	12	U6	5/12
6	U5	6/11	13	U6	6/11
7	U5	7/10	14	U6	7/10

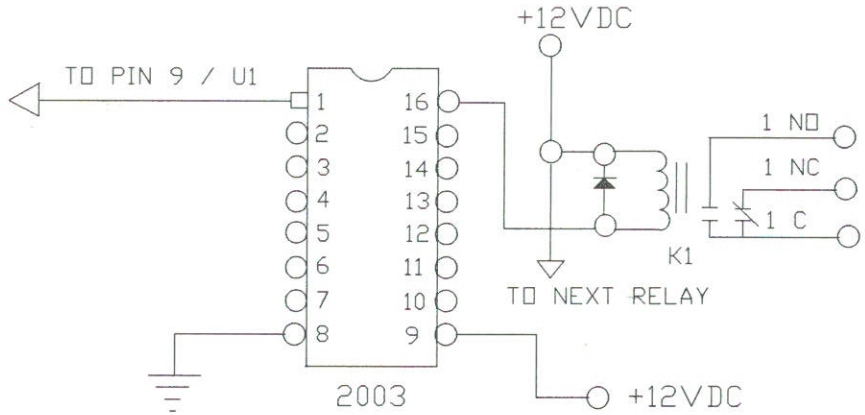

DDIO16-DIGITAL OUTPUT SIGNALS

NO.	2008	IN/OUT	NO.	2008	IN/OUT
1	U1	1/16	9	U2	7/10
2	U1	2/15	10	U3	1/16
3	U1	3/14	11	U3	2/15
4	U1	4/13	12	U3	3/14
5	U1	5/12	13	U3	4/13
6	U1	6/11	14	U3	5/12
7	U1	7/10	15	U3	6/11
8	U2	1/16	16	U3	7/10

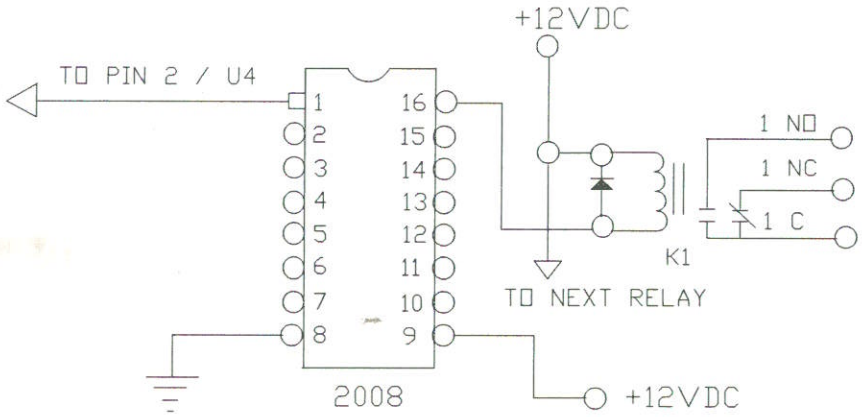

2003 9-9-93

NC25-4 Trouble-shooting Chart 7

Improper Analog Input Function

for 3-wire 5-volt sensors

Copyright 1993 Danfoss Inc.

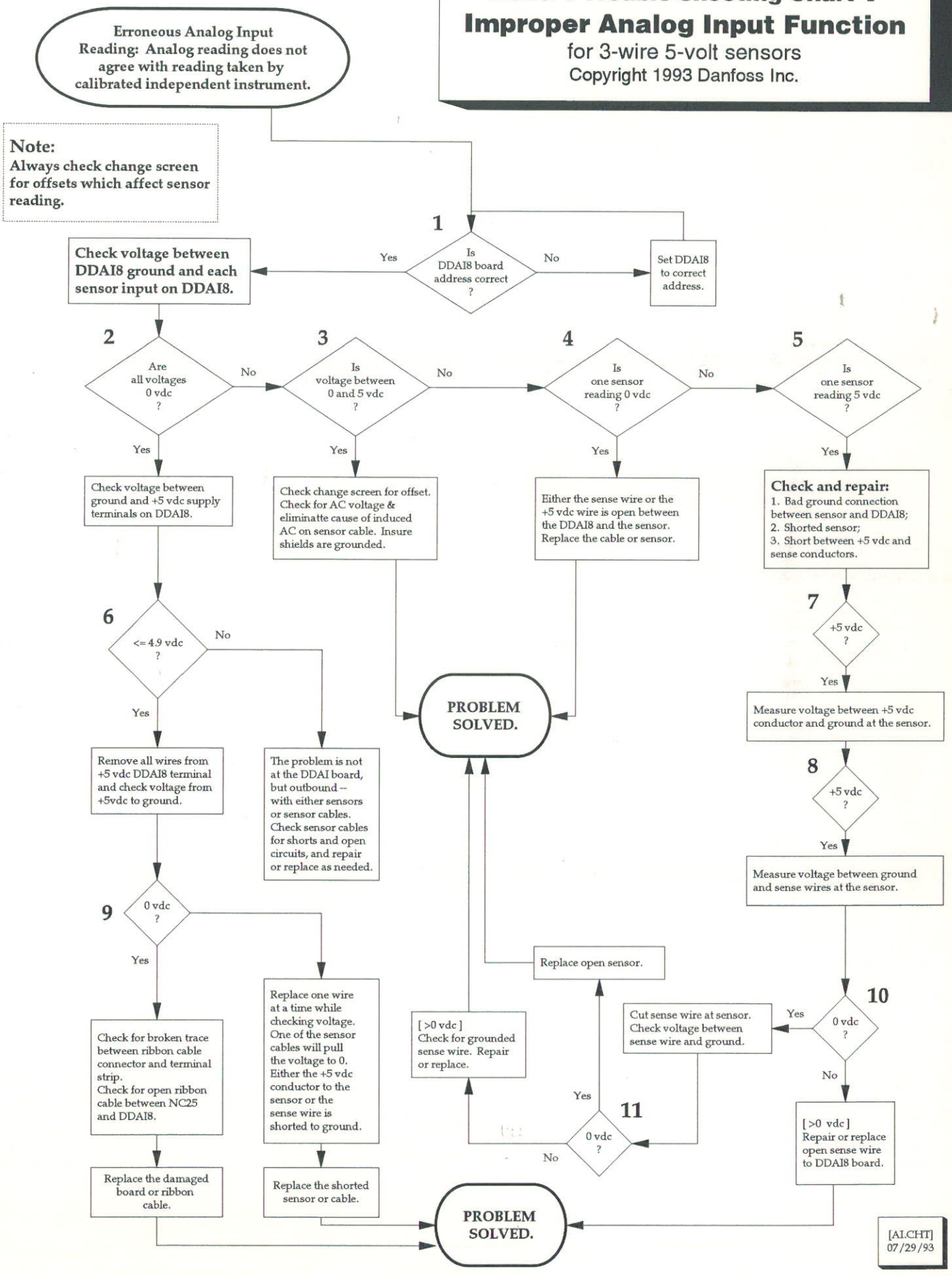

NC25-4 DIP SWITCH SETTINGS

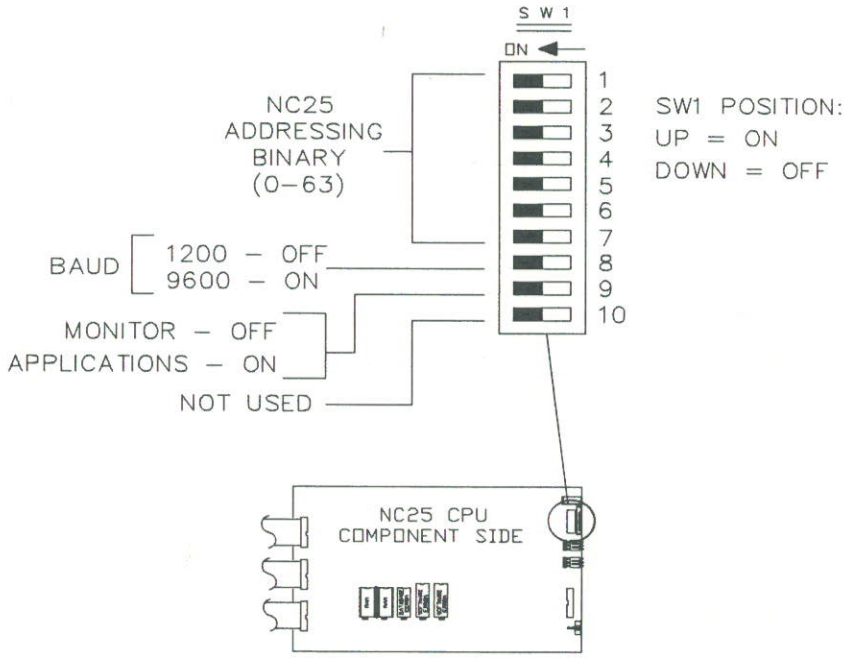

NC25-4 ADDRESS SETTINGS

NC25 No. (Used for Master)	HEX	S1	S2	S3	S4	S5	S6	S7
0	0	ON	ON	ON	ON	ON	ON	ON
1	1	OFF	ON	ON	ON	ON	ON	ON
2	2	ON	OFF	ON	ON	ON	ON	ON
3	3	OFF	OFF	ON	ON	ON	ON	ON
4	4	ON	ON	OFF	ON	ON	ON	ON
5	5	OFF	ON	OFF	ON	ON	ON	ON
6	6	ON	OFF	OFF	ON	ON	ON	ON
7	7	OFF	OFF	OFF	ON	ON	ON	ON
8	8	ON	ON	ON	OFF	ON	ON	ON
9	9	OFF	ON	ON	OFF	ON	ON	ON
10	A	ON	OFF	ON	OFF	ON	ON	ON
11	B	OFF	OFF	ON	OFF	ON	ON	ON
12	C	ON	ON	OFF	OFF	ON	ON	ON
13	D	OFF	ON	OFF	OFF	ON	ON	ON
14	E	ON	OFF	OFF	OFF	ON	ON	ON
15	F	OFF	OFF	OFF	OFF	ON	ON	ON
16	10	ON	ON	ON	ON	OFF	ON	ON
17	11	OFF	ON	ON	ON	OFF	ON	ON
18	12	ON	OFF	ON	ON	OFF	ON	ON
19	13	OFF	OFF	ON	ON	OFF	ON	ON
20	14	ON	ON	OFF	ON	OFF	ON	ON
21	15	OFF	ON	OFF	ON	OFF	ON	ON
22	16	ON	OFF	OFF	ON	OFF	ON	ON
23	17	OFF	OFF	OFF	ON	OFF	ON	ON
24	18	ON	ON	ON	OFF	OFF	ON	ON
25	19	OFF	ON	ON	OFF	OFF	ON	ON
26	1A	ON	OFF	ON	OFF	OFF	ON	ON
27	1B	OFF	OFF	ON	OFF	OFF	ON	ON
28	1C	ON	ON	OFF	OFF	OFF	ON	ON