DEGREE MASTER™

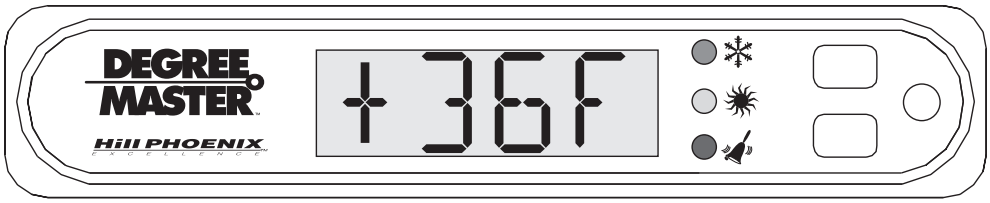

INSTALLATION & OPERATION

HANDBOOK

Hill PHOENIX™
EXCELLENCE

A DOVER DIVERSIFIED COMPANY

P058394H

8/01

Welcome to the Degree Master Load Management System. We're very pleased you joined us.

This installation and operation handbook has been especially prepared for everyone involved with the Degree Master System – owners, managers, installers and maintenance personnel.

This manual makes the installation, programming, and maintenance of the Degree Master Load Management system easy. The use of many illustrated instructions sets this manual apart from other traditional installation manuals. We hope that the information contained in this manual will aid you in maximizing the capabilities that the Degree Master design allows.

We are interested in your suggestions for improvement both in control system design and in this handbook. Please call/write to:

Hill PHOENIX
Marketing Services Department
1925 Ruffin Mill Rd.
Colonial Heights, VA 23834
Tel: 804-526-4455
Fax: 804-526-7450
or visit our web site at
www.hillphoenix.com

Table of Contents

Wiring specifications	p. 5
Wire types, maximum distances, fusing, relay ratings	
Load Center connectors & fuses	p. 6
Typical application wiring	p. 7
Connecting loads to the load center (120VAC and 240VAC)	
Auxiliary modules	p. 8
Defrost modules	pp. 8-9
Anti-sweat heater module	p. 10
Power and load connections to the modules	
Echelon communications	pp. 11-12
Cabling and specifications for strong, reliable networks	
Using the Degree Master	pp. 13-19
Introduction. The display.	p. 13
The handheld remote control	pp. 14-15
Connecting loads to the load center (120VAC and 240VAC)	
Programming	pp. 16-19
Connecting with the remote	p. 16
Programming inputs	pp. 16-17
Programming system configuration	p. 17
Programming setpoints	pp. 17-18
Special functions	p. 16
Using the display's buttons	p. 19
WIRING DIAGRAMS	pp. 20-22
Warranty	Inside back cover

The Hill PHOENIX Degree Master

Introduction

The Hill PHOENIX Degree Master is a stand-alone control powered by the fixture in which it is installed. The Degree Master Load Center can accept five universal inputs, and has a local display that shows sensor values and settings. The Degree Master is interrogated and programmed with its wireless handheld remote control. Setpoints and sensor values can be seen, and service functions performed, with the display mounted on each fixture.

Wiring specifications

Echelon® Lonworks® (FTT 10A)

Wire type	2 conductor AWG 16 unshielded twisted pair, Belden® 8471 non-plenum or equivalent, 85102 plenum or equivalent
Maximum distance	1600 feet (star configuration) 8800 feet (daisy-chain configuration) (follow Echelon Network Guidelines)

Local display

Maximum distance	100 feet; 20-foot cable supplied from factory can be extended

Power

Wire size	12 AWG maximum
Fuses	fuses at F2, F3, F4 sized according to load, ***not to exceed*** 20A maximum rating; fuse at F1 pre-installed at 1/4A rating; ***note: all installed fuses must be UL approved.***
Power connection to device	shall not exceed 20A branch circuit

Output connections

Wire size	14 AWG or larger

Output relay ratings

Valve or compressor	240VAC 1 HP
Light	120VAC 10A
Fan or defrost	120VAC 8A

Echelon and LonWorks are registered trademarks of Echelon Corporation. Belden is a registered trademark of Belden, Inc.

Load Center connectors

Refer to the figure below for a diagram of the Load Center.

Sensor inputs

Connector P4 provides five sensor inputs. There is ***no polarity to observe*** for sensor inputs.

LonWorks network

Connector P1 on the Load Center is for connection to the LonWorks network. There is ***no polarity to observe*** for network connections.

Local fixture display

The Degree Master local fixture display is connected to the Load Center at P3. The connector is keyed to insure correct insertion.

Echelon service button

SW1 serves as the Echelon service button.

Power connections

Power is supplied to the Load Center at P5. The connections include L1, L2, neutral, and chassis ground. Power requirements for the Degree Master are either 120VAC (2 wires) or 240VAC (3 wires).

If using 120VAC, connect (jumper) the L1 and L2 power connections on P5.

Output connections

The Degree Master supports three kinds of outputs: (1) valve or compressor; (2) lights; (3) fan or defrost. Connection points and relay contact types for each output are shown in the following table:

Connection	Output Type	Relay Contacts
J1	Fan or defrost	NC
J2	Fan or defrost	NO
J3	Lights	NO (only)
J4	Valve or compressor	NC
J5	Valve or compressor	NO

Note that there are two connections, NO and NC, for valves or compressors and two for fans or defrost, but that there is only one NO connection for lights, and that connection is not labeled “NO.”

Output power connection strips

The Load Center has the following three power output connection strips ***(these strips are hot at all times)***:

L1 (Line 1): A four-connector strip directly connected to L1 at the power input strip.

L2 (Line 2): A four-connector strip directly connected to L2 at the power input strip.

N (Neutral): A six-connector strip directly connected to the neutral terminal on the power input strip.

Fuses

Fuses are located at F1, F2, F3, and F4. F1, with a rating of 1/4A, is factory installed; the rating should not be changed. F2, F3, and F4, not to exceed 20A, are installed according to their respective loads. ***All fuses must be UL approved.***

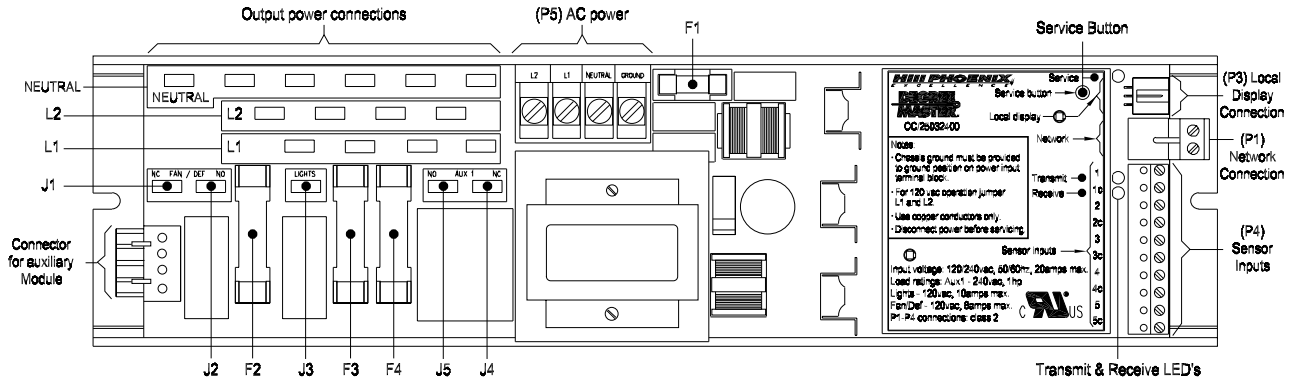

Typical application wiring

Note that wiring instructions differ depending on the main power.

If the Load Center is operating on 120VAC power:

For compressor or valve control
(L1 power leg is used)

Take power for the controlled device from J4 (normally closed contacts) or J5 (normally open contacts) and from an available neutral connection on the load center.

For light control
(L1 power leg is used)

Connect one side of the light ballast to J3 and the other to an available neutral connection on the load center.

For fan or defrost control
(L2 power leg is used)

For fans, connect one side of the load to J1 and the other side to an available neutral on the load center.

For defrost, connect one side of the load to J2 and the other side to an available neutral on the load center.

If the Load Center is operating on 240VAC power:

For compressor or valve control
(L1 power leg is used)

Take power for the controlled device from J4 (normally closed contacts) or J5 (normally open contacts) and from an empty L2 connection on the load center.

For light control
(L1 power leg is used)

Connect one side of the light ballast to J3 and the other to an available L2 connection on the load center.

For fan or defrost control
(L2 power leg is used)

For fans, connect one side of the load to J1 and the other side to an available L1 connector on the load center.

For defrost, connect one side of the load to J2 and the other side to an available L1 connector on the load center.

Auxiliary modules

Auxiliary modules are connected to the load center's expansion port, P2. Multiple modules can be attached to a single load center, and may be connected in any order.

Each auxiliary module has a four-pin expansion plug on its right side, and a four-pin keyed port on its left.

Separate power is not required for auxiliary modules, which derive their power from the load center. Power connections to modules must be daisy-chained.

Defrost modules

Degree Master defrost modules allow the load center to control up to three defrost loads, while at the same time allowing the fan/defrost relay on the load center to be used for fan control. The figure below shows a defrost module.

The defrost module plugs in to P2 on the load center.

Power connections for defrost modules

Take these steps to install a defrost module:

1. Turn off power to the Degree Master load center.
2. Connect J1 of the defrost module to P2 on the load center.
3. Place a jumper between L1 (J3) on the defrost module and an empty connector on the L1 strip on the load center. Note: this was done at the factory if the load center and defrost module were purchased together.
4. Place a jumper between L2 (J4) on the defrost module and an empty connector on the L2 strip on the load center. Note: this was done at the factory if the load center and defrost module were purchased together.
5. Connect the neutral lines from the loads to the neutral power connection strip on the load center.

Alternative power connection for defrost modules

As an alternative to the power connections just described, an external circuit may be wired to L1 and L2 on terminal strip P2 on the defrost module. ***Do not*** use both methods of powering the defrost module at the same time; to do so might severely damage the defrost module.

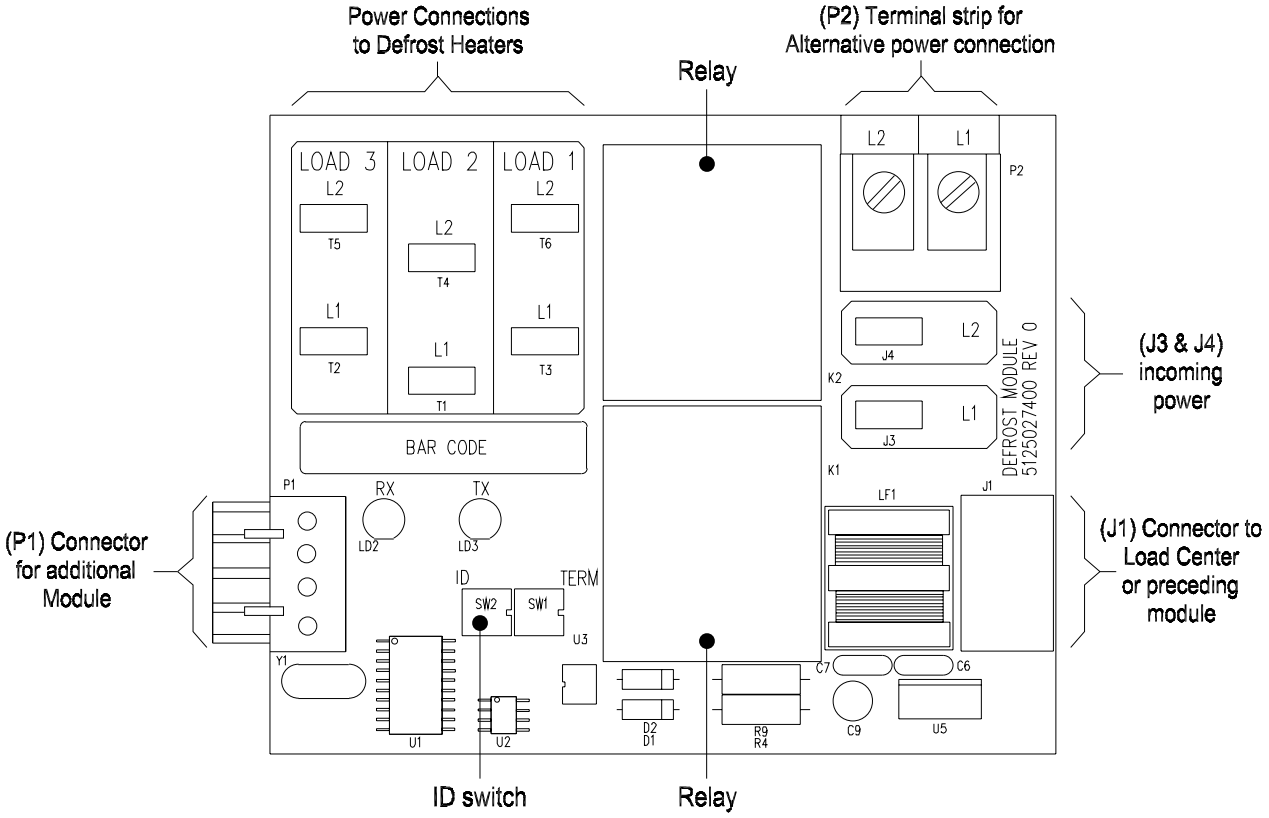

Load connections to defrost modules:

On the defrost module, connections for the loads are found as vertical pairs of spade connectors in the upper left quadrant of the board. From left to right, these pairs are for Load 3 (individual terminals labeled T2 and T5), Load 2 (T1 and T4), and Load 1 (T3 and T6). The lower connector in each pair is the L1 leg, and the upper connector is the L2 leg, for that load.

1. Connect the load wires to the appropriate pair of L1-L2 spade connectors on the defrost module.
2. Connect the neutral lines from the loads to spade connectors on the neutral bus on the load center.

Addressing the defrost module

Defrost modules must be addressed using the ID dip switch in the lower left quadrant of the module. With both switches down (OFF), the address value will be 0, the correct address for the first module. A second module would be addressed by placing switch 1 up (ON) and switch 2 down (OFF). When the module is correctly connected to the load center and properly addressed, the red "TX" (transmit) and yellow "RX" (receive) LED's will blink, indicating that there is successful communication with the load center.

Troubleshooting:

If the TX LEDdoes not blink, check the position of the ID dip switches.

Software requirements

Installation of a defrost module does not affect the Degree Master's software or require additional programming. Defrost loads connected to the module will be turned on when the fixture's defrost cycle begins.

Defrost module installation for three phase defrost

The Degree Master supports three phase defrost loads with installation of multiple defrost modules. To control a three phase defrost load, follow these steps:

1. Connect a defrost module to the Degree Master using the procedure detailed on page 4.
2. Connect a second defrost module using the P1 connector of the first defrost module.
3. Use one (and only one) of the following options to provide load power to the second defrost module. Duplicating the power wiring can result in damage to the defrost module.

a. If you have used screw terminal strip on module #1 for incoming power, jumper the screw terminals on module #1, observing polarity, to the screw terminals on module #2,

or, if not,

b. Jumper from spade connectors J3 (L1) and J4 (L2) of module #1 to screw terminal strip P2 (L1, L2) of module #2,

or

c. Jumper from spade connectors J3 (L1) and J4 (L2) of module #1 to spade connectors J3 (L1) and J4 (L2) of module #2.

4. Connect the neutral lines from the loads to to the terereneutral power strip on the load center.
5. Follow the instructuctions at left under "Load connections to defrost modules" to connect module #2 to its loads.
6. Address module #2 by setting switch 1 on the ID dip switch up (ON) and switch 2 down (OFF). This will give module #2 an address value of 1.

When both modules are correctly connected to the load center and properly addressed, both red "TX" (transmit) and yellow "RX" (receive) LED's will blink, indicating successful communication with the load center.

Troubleshooting:

If any of the TX or RX LED's do not blink, check the settings on the ID dip switches. They should be as follows:

Module #1: both switches down (OFF)
Module #2: switch 1 up (ON), switch 2 down (OFF).

Anti-sweat heater module

The Degree Master anti-sweat heater (ASH) module allows the load center to control up to three anti-sweat loads.

Power connections for ASH modules

The ASH module requires 120VAC (2 wires) power derived from the load center. If the load center and ASH module were purchased together, power connections will have been pre-wired at the factory. If this is not the case, take these steps to install an ASH module:

1. Turn off power to the Degree Master load center.
2. Connect J1 of the ASH module to P2 on the load center or to the expansion connector on another auxiliary module connected to the load center.
3. Use one (and only one) of the following options to provide load power to the ASH module. Duplicating the power wiring can result in damage to the ASH module.

a. Jumper from the ASH module's J9 spade connector (L1) to an open connector on the L1 power strip of the load center or, if there is a previous auxiliary defrost module, to the module's J3 spade connector (L1).

or

b. Use the screw terminal strip of the ASH module (P3) to power it, connecting L1 and neutral, according to the labeling, to appropriate locations on the load center.

4. Jumper from the ASH module's neutral power connection (either the J3 spade connector or the neutral screw terminal connection) to an available spade connector on the load center's neutral power strip.

Load connections for ASH modules

Connect L1 and neutral wires from each anti-sweat heater load to the appropriately labeled terminals on the ASH module for ASH1, ASH2, and ASH3.

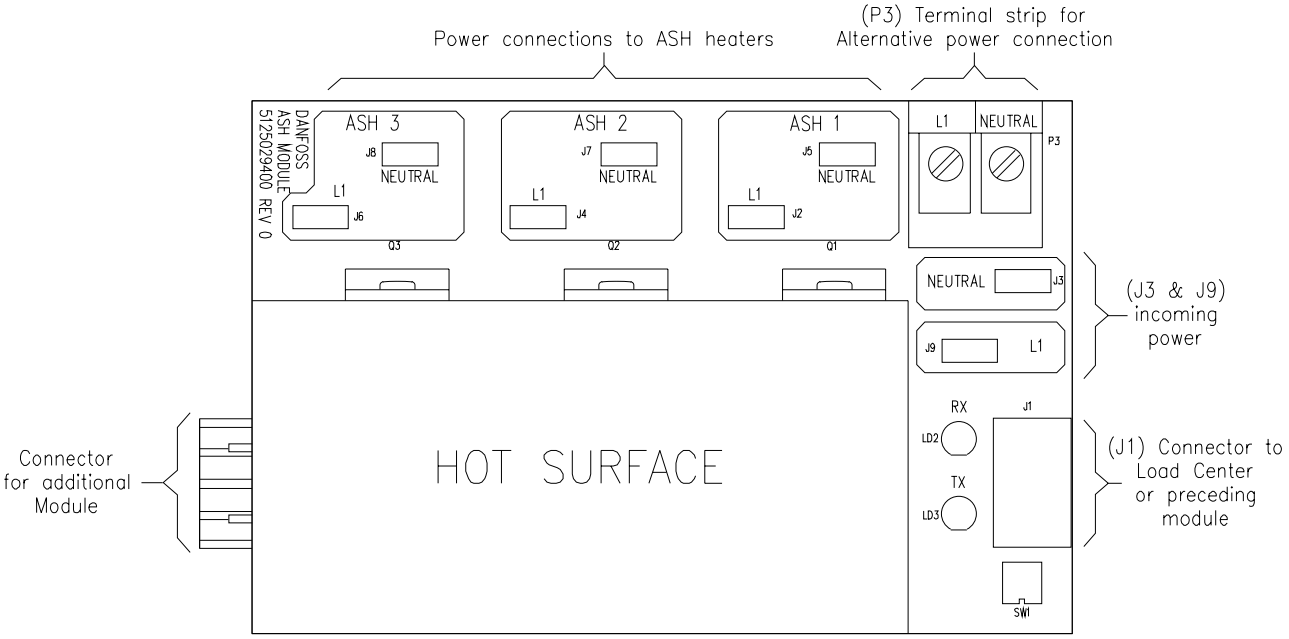

Echelon communications

The Degree Master uses the Echelon FTT-10 network protocol. To insure good network function and communications, always adhere to the specifications given in this section.

Echelon networks

This section gives the cable type and distance limitations for two Echelon-supported network configurations: the FTT-10 star network and the FTT-10 double-terminated daisy-chain network. The star variation is recommended because it offers more configuration flexibility. Whichever type of network configuration you choose, adherence to the Echelon guidelines is required.

It is strongly recommended that installation drawings reflect your chosen network layout and that installing contractors be required to observe the configuration, cable type, and distance limitations specified. A copy of the installation drawings should be displayed on site to make network troubleshooting easy.

Network routing should also always be documented and posted on site for the use of maintenance personnel.

Resistor network termination

The Echelon network requires inclusion of a termination resistor. The value and location of the termination resistor depends on network configuration.

Network specifications

Singly-terminated star configuration FTT-10 network

The singly-terminated FTT-10 star configruration network branches in various directions from a central location (the hub). Each branch is a daisy-chain of load centers proceeding from one fixture to another. A maximum of four branches from a single network hub is recommended.

The star configurations requires the hub of the star to be within ten feet of the network management device.

Network cable type (star network)

Network cable can be 16AWG Belden #8471 (non-plenum) or Belden #85102 (plenum).

Total network length (star network)

The total length of network cable in the network is limited to 1600 feet (500 meters).

Maximum node-to-node distance (star network)

The maximum distance between nodes on the network is limited to 1300 feet (400 meters).

Doubly-terminated daisy-chain configuration FTT-10 network

The doubly-terminated FTT-10 daisy-chain configruration network allows greater distance to be run from the network management controller, but requires that all nodes be connected in a single daisy-chained cable run.

This configuration allows easy isolation of the network segments. Signal strength is greater because there are fewer branch ends to cause signal reflections on the network.

Network cable type (doubly terminated)

Network cable can be 16AWG Belden #8471 (non-plenum) or Belden #85102 (plenum).

Total network length (doubly terminated)

The total length of network cable in the network is limited to 8800 feet (2700 meters).

Maximum node-to-node distance (doubly terminated)

The maximum distance between nodes on the network is limited to 1600 feet (500 meters) with Belden #85102 cable, and to 2200 feet (700 meters) with #8471 cable.

***Avoid trouble* -- Build a strong network:**

1. Make sure there are no stray strands of wire where connectors are crimped on. Stray strands can cause crosstalk.
2. After you've attached a connector, hold the connector and tug firmly on the cable to make certain the crimp is secure.
3. Make sure termination resistors are of correct size and located properly on the network.

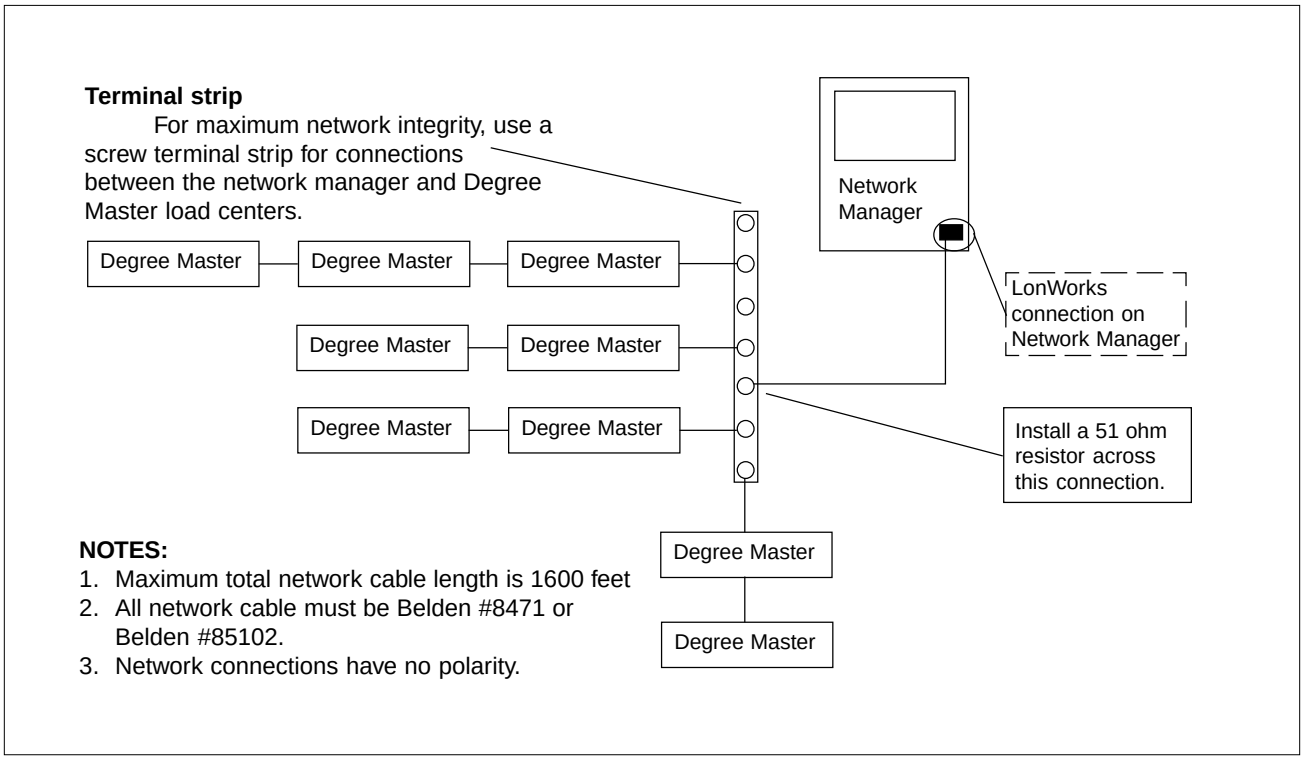

A singly-terminated Degree Master network

A doubly-terminated Degree Master network

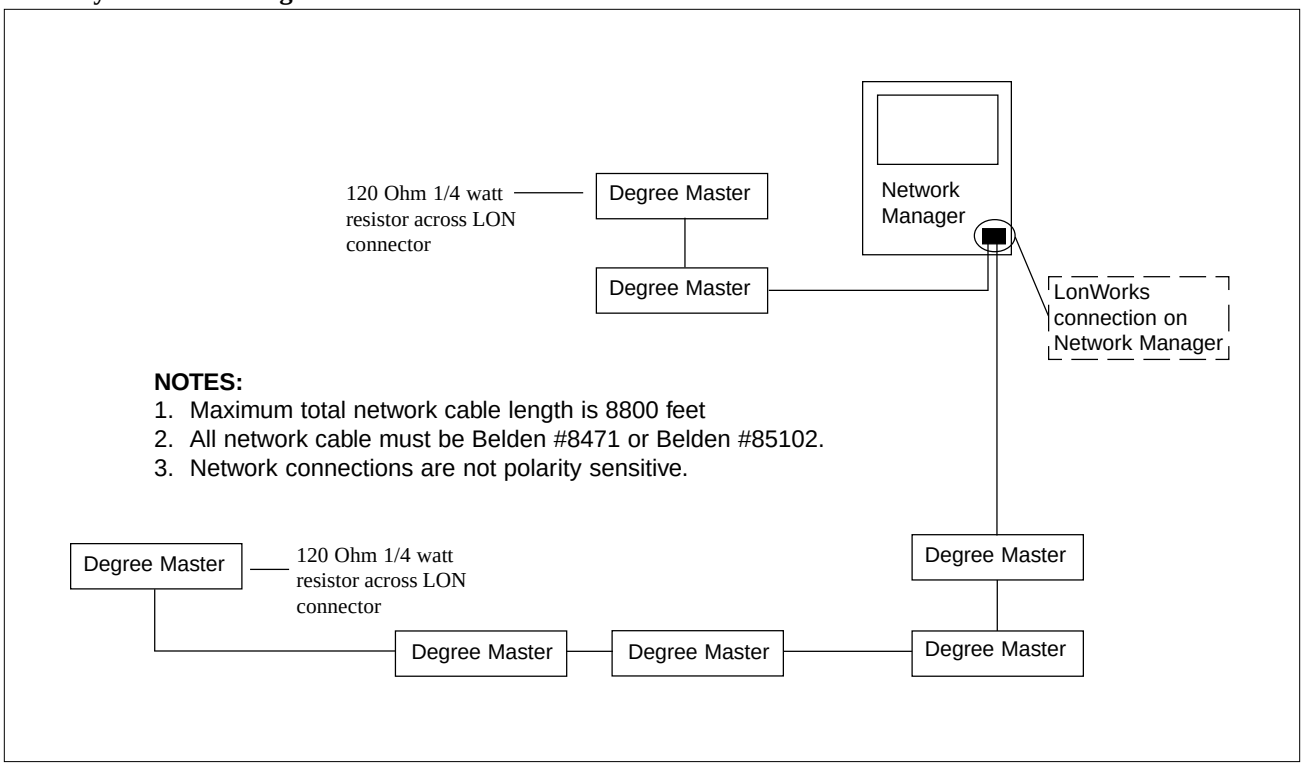

Using the Degree Master

Introduction

Communicating with the Degree Master

There are three ways to communicate with the Degree Master:

1) using the buttons on the fixture display, and reading information from it
2) with its handheld remote control;
3) connecting the Degree Master to a control network with user interfaces of its own.

In this manual we will discuss the first two means of communication. Network communications should be discussed in applicable system manuals. First, let's take a look at the local fixture display.

A quick tour of the display

The LED display can show positive and negative temperatures and messages composed from a full range of alphanumeric characters. To the right of the display is a vertical row of three LED's (green, yellow, and red) used to show system status; each of these is associated with an icon calling to mind its function. Moving further to the right, there are two touch-sensitive pads we're going to call "buttons." Finally, at the right end of the display is a receptor for communications from the Degree Master handheld remote control.

Unless there has been communication from the buttons or the handheld remote, the display will show the value of the default sensor selected in the System Setup field.

After communications, when there has been no activity at the buttons or from the remote for 3 minutes, the display will again show the default sensor's value.

Connection to the Load Center

The Degree Master's local fixture display is connected to P3 at the Load Center by a two-conductor twisted cable (to locate the P3 connector, see the drawing on page 2).

What the status LED's tell us

There are three status LED's (Light Emitting Diodes) on the fixture display. They give us the following information when they are on:

Green (next to the snowflake icon) when the green LED is on, the system is in refrigeration mode.

Yellow (next to the sun icon) When the yellow LED is on, the system is in defrost mode.

Red (next to the ringing bell icon) The red LED indicates alarm status. If the LED is on continuously, the system has an alarm condition. If the red LED is flashing, the system's alarm function has been deactivated.

The buttons

We'll explain using the display's buttons to read sensor values and set points, and to make changes in operation of the fixture, after we've explained the more comprehensive functions of the handheld remote control.

The Degree Master hand-held remote control

The hand-held remote allows both interrogation and programming of Degree Masters.

A quick tour of the remote

Surrounding the number key area, the remote has four special functional areas; clockwise from the top, they are:

1. VIEW, with these keys:
   [STATUS]
   [LOADS]
   [MISC]
2. FUNCTIONS, with these keys:
   [NORM OP]
   [CASE OFF]
   [CASE CLN]
   [EMRG D]
   [ALRM OVRD]
3. SETPOINTS, with these keys:
   [TEMP]
   [DEFR]
   [ALARM]
   [ASH]
   [LIGHT]
4. SETUP, with these keys:
   [INPUTS]
   [CONFIG]

The number key area, in addition to 1-0 and +/- keys, also contains some important special function keys:

The scroll navigation keys, surrounding the [REPEAT] key;
   [ESC]
   [ENTER]
   [CONNECT]

In this manual, we will use words to represent the arrows that actually appear on the keys. The yellow [UP] and [DOWN] keys are used to scroll through the displayed fields.[RIGHT] has the same effect as [DOWN], and [LEFT] has the same effect as UP. The REPEAT key will re-scroll the current display from the beginning. When scrolling the display or programming with the remote, it is essential to wait until the display has completely finished scrolling and is at rest before making entries. The Degree Master will not respond to entries made while the display is scrolling.

The VIEW keys

STATUS

The [STATUS] key will first display the words CASE STATUS, then the default temperature. The default temperature can be programmed to be CTRL TEMP (a circuit control setting provided by the network manager), CASE TEMP (a temperature value from a sensor in the case), or PROD TEMP (a value provided by a product temperature sensor in the case). By using the down arrow, the other two fixtures temperatures will be displayed in the order programmed.

Here are all of the status displays in the order that they will appear using the down arrow, and their meanings:

MAX PROD TEMP
   the highest temperature reached since midnight or the last reset

ALRM STAT
   current alarm conditions for the fixture

NO AL	there are no active alarms
HI T	there is a high temperature alarm
LO T	there is a low temperature alarm

DCH
   discharge air temperature

RTN
   return air temperature

DEFR TERM
   the temperature at the defrost termination sensor

EVAP IN
   the temperature of the evaporator at its inlet

EVAP OUT
   the temperature of the evaporator at its outlet

SUPR HEAT
   the evaporator superheat, calculated as the difference between the EVAP OUT and EVAP IN sensors.

LOADS

The [LOADS] key reveals data for the Degree Master’s controlled loads (outputs). Each of the

loads can have one of two states -- ON or OFF. Here are the displays in the order that they will appear after pressing the [LOADS] key on the remote:

REFR
the status of the refrigeration output; whether the Degree Master is calling for refrigeration to be on or off.

DEFR
whether the fixture defrost output is on or off.

FAN
whether the fixture fan output is on or off.

LGHT
whether the fixture light output is on or off.

ASH
the percentage of time the anti-sweat heaters are on. *NOTE*: the % sign is represented by a P. This value will read 100P if there is no ASH module present.

REFR OVRD
whether or not refrigeration control is in override. If you push [ENTER] while in this field, you can select override of DEGREE MASTER control by scrolling down from “NONE” to “ON” or “OFF” and pushing [ENTER] again.

DEFR OVRD
whether or not defrost control is in override. If you push [ENTER] while in this field, you can select override of DEGREE MASTER control by scrolling down from “NONE” to “ON” or “OFF” and pushing [ENTER] again.

FAN OVRD
whether or not fan control is in override. If you push [ENTER] while in this field, you can select override of DEGREE MASTER control by scrolling down from “NONE” to “ON” or “OFF” and pushing [ENTER] again.

LGHT OVRD
whether or not light control is in override. If you push [ENTER] while in this field, you can select override of DEGREE MASTER control by scrolling down from “NONE” to “ON” or “OFF” and pushing [ENTER] again.

ASH OVRD
whether or not anti-sweat heater control is in override. If you push [ENTER] while in this field, you can select override of DEGREE MASTER control by scrolling down from “NONE” to “ON” or “OFF” and pushing [ENTER] again.

MISC

The information shown in the MISC display is unique to each Degree Master load center. It also varies with the version of software installed. Here are the displays in the order that they will appear after pressing the MISC key on the remote:

DEWP TEMP
the calculated dew point temperature received from the network manager.

SUCT TEMP
suction temperature received from the network manager.

DOW
the day of the week received from the network manager.

TIME
the time of day received from the network manager.

SUBN
the subnet address (used by Degree Master service technicians).

NODE
the node number of the particular Degree Master on the network.

VERSION
the version number of the Degree Master software installed.

Programming and changing settings

Connecting to the Degree Master

To make any changes to the settings or programmed functions of the Degree Master, you must first connect to the device using the following procedure:

1. Push [CONNECT]. The display responsd "FOR CNX COPY NUM nnnn" where "nnnn" is a four digit numeral.
2. Push [ENTER]. The first digit of the displayed numeral blinks.
3. Enter the four digit number "nnnn" you saw in step 1 above.
4. Push [ENTER]. You now have programming access to the device; the first status display appears again.

You can now move to all the areas where programming entries are possible. If at any time three minutes pass without any key being pushed on the remote, you will be disconnected.

Programming inputs

In order to program an input, it is necessary to specify its **channel** and **type**, and to enter an **offset** if one is required to adjust the accuracy of the sensor. Let's define those terms:

CHANNEL

the dedicated pathway sensor information takes as it enters and is processed by the load center. The channel will have a number from 00 to 05.

TYPE

the type of input:

NONE there is no sensor for this input
ELM the sensor is an Elm sensor
DIG the sensor is a digital (on-off) sensor
TP1the sensor is a Danfoss TP1 sensor
TP2 the sensor is a Danfoss TP2 sensor

OFFSET

a number of degrees from 00 to 99 that is added to or subtracted from the sensor value by the Degree Master to fine tune sensor readings.

To change an input's setup, use the following procedure

1. Connect to the Degree Master using the procedure described at left.
2. Push the [INPUTS] key. "SETUP INPUTS" will scroll across the display. You will then see the message "FOR PROD SNSR PUSH ENTR." You can set up the product sensor or use the up and down arrows to move to another sensor. Using the down arrow, the sensors will appear in this order:

   PROD
   product temperature sensor
   DCH
   discharge air temperature sensor
   RTN
   return air temperature sensor
   DEFR
   defrost termination temperature sensor
   EVAP IN
   evaporator inlet temperature sensor
   EVAP OUT
   evaporator outlet temperature sensor

   We will assume for the purpose of example that you wish to set up the product temperature sensor.
3. Push [ENTER] to select the product sensor. The display responds with "CHAN nn" where nn is a two-digit numeral. Only the numeral remains on the display. (Remember, if at any time you need to refresh your memory, press repeat to review the entire message.) If the displayed channel is the correct channel for the product sensor, go to step 5. If you need to change the channel, press [ENTER], and the first digit of the channel number begins to blink. You can key in a number from 0-9 from the numeric pad or you can use the up and down arrow keys to change the number. When the number is as you want, move to the right digit by using the right arrow key. Adjust this digit in the same manner.
4. When the channel number is correct, press [ENTER].
5. In the same manner, use the up and down arrow keys to scroll to the other programmable fields (TYPE, OFFS) and make any needed changes.
6. Push [ESC] to exit to the main input.
7. Use the arrow keys to move to the next input

needing changes. Make the changes as detailed above.

Programming system configuration

System setup is accomplished after connecting to the Degree Master, then pushing the [CONFIG] key. Configuration options are as follows:

REFR CTRL
- NONE
  - No refrigeration control is programmed.
- MFGR not yet implemented
- EEV not yet implemented
- EPR not yet implemented
- CYCL on-off control

VALVE TYPE
- NONE no valve is controlled
- MFGR not yet implemented
- PULS not yet implemented
- STEP not yet implemented
- SOLN the controlled valve is either a liquid line or suction stop solenoid.

VALVE POLARITY
- EOFF the valve is normally closed
- EON the valve is normally open

USE FAN CYCLE CTRL
- Sets fans to be turned off if a selected sensor is at too high a temperature. Choose YES or NO.

USE FAN/ DEFR RLY FOR
- FANS the relay controls fans
- DEFR the relay controls defrost

PULSE PERIOD
- not yet implemented

STEP RATE not yet implemented

MAX STEP not yet implemented

STEP HYSTERESIS
- not yet implemented

STEP INIT RNG
- not yet implemented

DOW the day of the week

TIME the time of day

DFLT TEMP DISP
- PROD product sensor is default display
- CTRL control sensor is default display
- CASE case sensor is default display

DUAL TEMP MODE
- MED for medium temperature operation
- LOW for low temperature operation

Programming setpoints

Setpoint programming and changes are accomplished by using the keys in the setpoints area of the remote control. The five buttons and their associated setpoints are as follows:

[TEMP]: **Temperature setpoints**

After pushing the [TEMP] button, the confirming message “SETUP REFRIG’ appears, followed by the first parameter, “CUT IN” and its current value. As for any parameter, if you wish to change the setting, push [ENTER] when the value appears, and the display will begin to flash. Use the number keys to put in the new setting. The other parameters are:

CUT IN
- the temperature at which refrigeration will be started.

DEAD BAND
- the number of degrees differential between cut in and cut out.

SUPR HEAT
- the temperature differential to maintain across the evaporator, between sensors EVAP IN and EVAP OUT.

MIN OFF TIME
- the length of time that refrigeration must remain off before being turned on.

FAN CYCL SETP
- (active only if there is a “YES” answer to “USE FAN CYCL TEMP” in configuration) fans will be off at and above this temperature.

MED TEMP OFFS
- the offset by which temperature setpoint and alarm limits will be raised for operation in the medium temperature range in dual temperature operation.

[DEFR]: **Defrost setpoints**

The parameters are:

TERM TYPE
- TIME terminates on time alone
- TEMP terminates on time and temp
- OPEN terminates on open digital sensor
- CLSDF termniates on closed digital sensor

STRT TIME
- The start time for the first defrost. If more than one defrost is scheduled, they will be evenly spaced throughout the day.

NUM PER DAY
- The number of defrosts per day.

MAX TIME
- the maximum defrost time, in minutes.

MIN TIME
- the minimum defrost time, in minutes.

TERM TEMP
the termination temperature.
DRIP DOWN DLY
the time in minutes to wait after defrost before resuming refrigeration.
FAN STRT SETP
the temperature at which fans start after defrost termination.
FAN STRT DLY
The maximum time fans will delay after defrost termination regardless of temperature.
POST DEFR ALRM DLY
the time during which alarms will not be allowed after termination of defrost.
REFR VALV IN DEFR
CLSD the valve is closed during defrost
OPEN the valve is open during defrost
FAN IN DEFR
NORM fan will operate normally during defrost.
OFF fan will be off during defrost.
LGHT IN DEFR
NORM lights will operate normally during defrost.
OFF lights will be off during defrost.
ASH IN DEFR
NORM anti-sweat heaters will operate normally during defrost.
OFF anti-sweat heaters will be off during defrost.

[ALARM]: **Alarm setpoints**

The parameters are:
HIGH CASE TEMP
the high case temperature for alarm.
LOW CASE TEMP
the low case temperature for alarm.
HIGH PROD TEMP
the high product temperature for alarm.
LOW PROD TEMP
the low product temperature for alarm.
ALRM DLY
the number of minutes an alarm temperature is exceeded before an alarm occurs.
CASE CLN DLY
the number of minutes during which no alarms will be generated during case cleaning.
LGHT IN ALRM
NORM anti-sweat heaters will operate normally during alarm conditions.
OFF anti-sweat heaters will be off during alarm conditions.
ASH IN ALRM
NORM lights will operate normally during alarm conditions.
OFF lights will be off during alarm conditions.

[ASH]: **Anti-sweat heater setpoints**

The parameters are:
DEWP HIGH SETP
the high dewpoint setpoint.
DEWP LOW SETP
the low dewpoint setpoint
ASH1 MIN DUTY
the minimum percentage of its 7-second duty cycle that ASH1 will run
ASH1 MAX DUTY
the maximum percentage of its 7-second duty cycle that ASH1 will run
The same settings are made for ASH2 and ASH3.

[LIGHT]: **Lighting setpoints**

The parameters are:
SUN ON TIME
The time of day at which the fixture lights are wanted on on Sunday.
SUN OFF TIME
The time of day at which the fixture lights should turn off on Sunday.
The same settings are made for the other days of the week.

Special functions

The fixture can be put in several modes of operation with the handheld remote. These functions of the remote should be used with care.

[NORM OP]: **Normal operation**

This button returns the fixture to normal operation under control of the Degree Master as programmed.

[CASE OFF]: **Case off**

This button turns the fixture off. All functions, refrigeration, fans, lights, defrost, and anti-sweat heaters, will be off until the [NORM OP] key is pushed.

[CASE CLN]: **Case cleaning**

All case functions will be turned off to allow cleaning. Fucntions will remain off until [NORM OP] is pushed. If [NORM OP] is not pushed, and "CASE CLN DLY" expires, an alarm will be generated.

[EMERG D]: **Emergency defrost**

A defrost (with the same termination parameters as configured for normal defrosts) will be initiated.

[ALRM OVRD]: **Alarm override**

Alarms from the fixture will be turned off until turned back on with this key. The alarm LED will flash during the override.

Using the display's buttons

The buttons on the digital display can be used to interrogate the Degree Master and access service functions. The buttons can operate in three modes: status, aux functions, and service.

Status mode

In this mode, the upper button has the same function as the [REPEAT] key on the remote control. Pushing the upper button will cause the display to repeat the label for the present reading. The lower button has the same function as the down arrow key on the remote. It will move the display to the next field.

The fields that can be seen in this mode are:

PROD TEMP
CASE TEMP
CTRL TEMP
MAX PROD TEMP
ALRM STAT
DCH
RTN
DEFR TERM
EFAP IN
EVAP OUT
SUPR HEAT

Aux functions mode

To enter the aux functions mode, push and hold the upper button for five seconds. In this mode a number of functions can be activated:

CASE CLN
NORM OP
EMRG DEFR
CASE OFF
ALRM OVRD
DUAL TEMP
CHANGE TO [xxx] TEMP
(dual temp function)
this could read CHANGE TO LOW TEMP or CHANGE TO MED TEMP, depending on the range in which the fixture is currently operating.

On the display, each of the functions is followed by the letters "HLD" preceded by an up arrow. If you press and hold the upper button during this display, the up arrow will change to an asterisk (*) and the Degree Master will enter the selected state. In the case of CASE CLN, CASE OFF, and ALRM OVRD, the case will not be restored to normal function until NORM OP is activated. In the case of EMRG DEFR, the defrost will be terminated when the case reaches defrost termination temperature or when the maximum defrost time has elapsed. For DUAL TEMP, press [ENTER], then the up arrow, then [ENTER] again to change modes.

Service mode

To enter the service mode, push and hold both buttons for 3 seconds. When the Degree Master enters the service mode, the display changes to "↑RS↓". Now the butttons have very different functions. The upper button will reset the system; the lower button will activate the service button, which allows the host controller to recognize the Degree Master as a node. When either button is pressed for these functions, the arrow changes to an asterisk as confirmation.

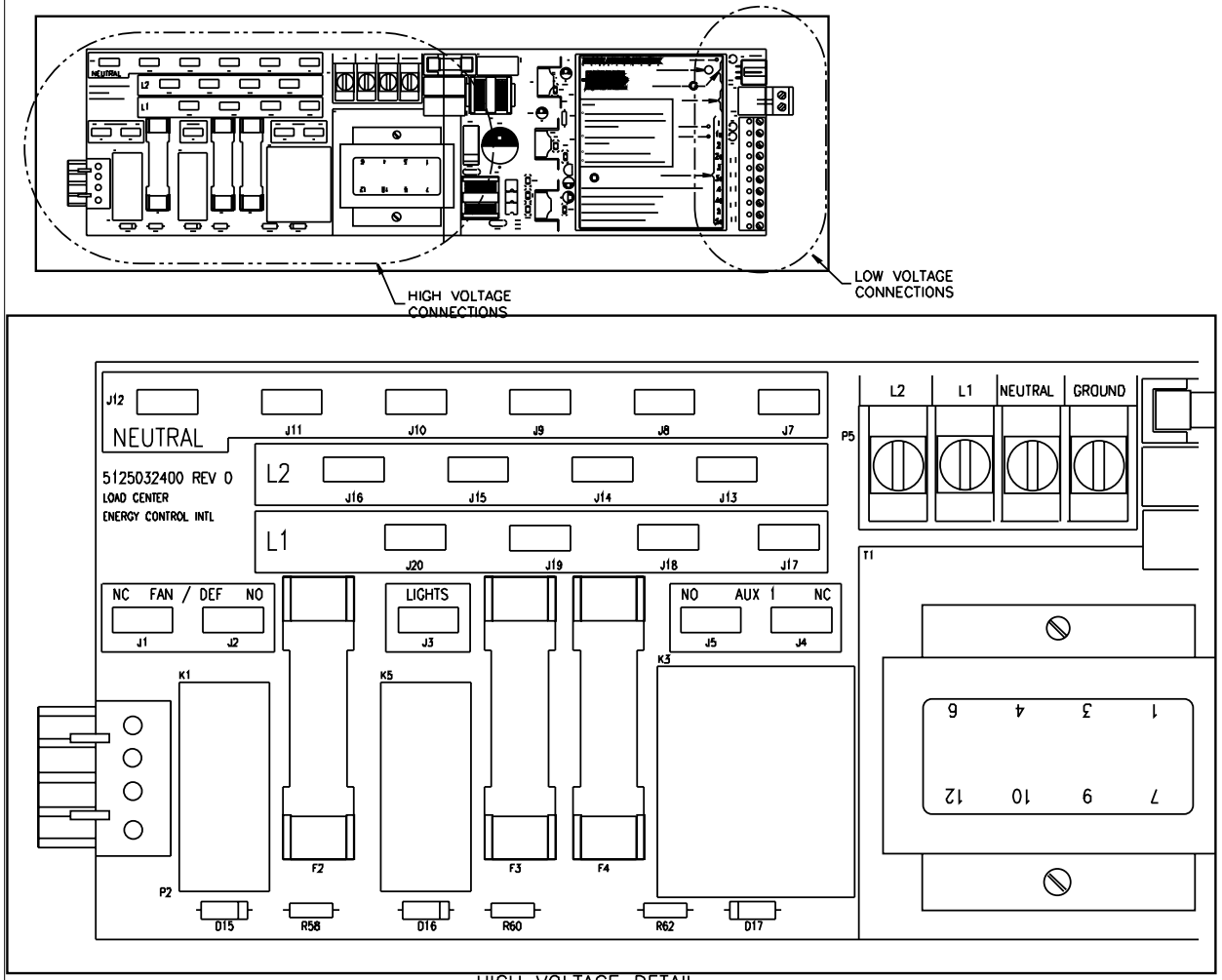

HIGH VOLTAGE DETAIL

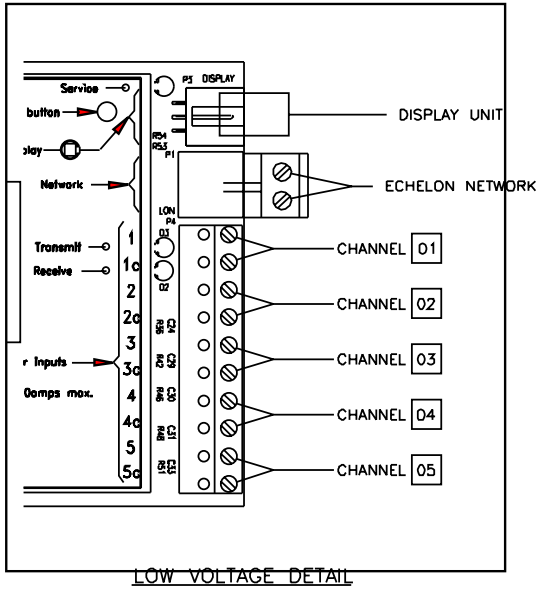

LOW VOLTAGE DETAIL

LOAD CENTER

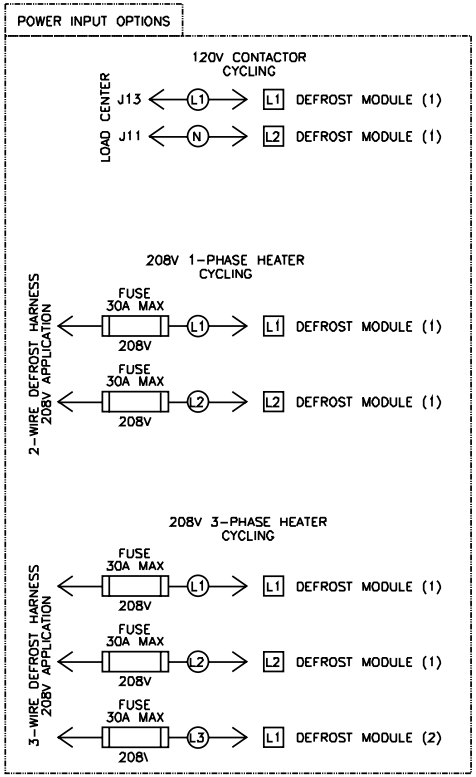

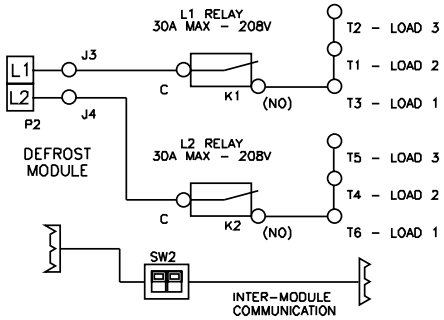

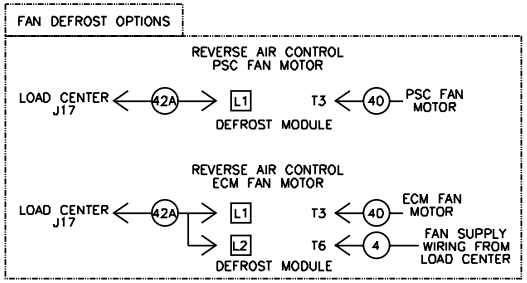

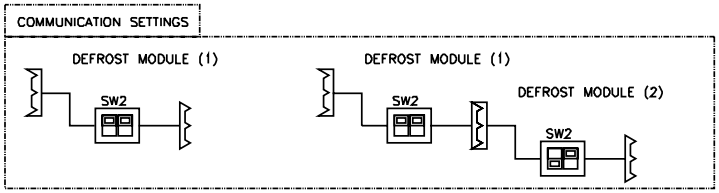

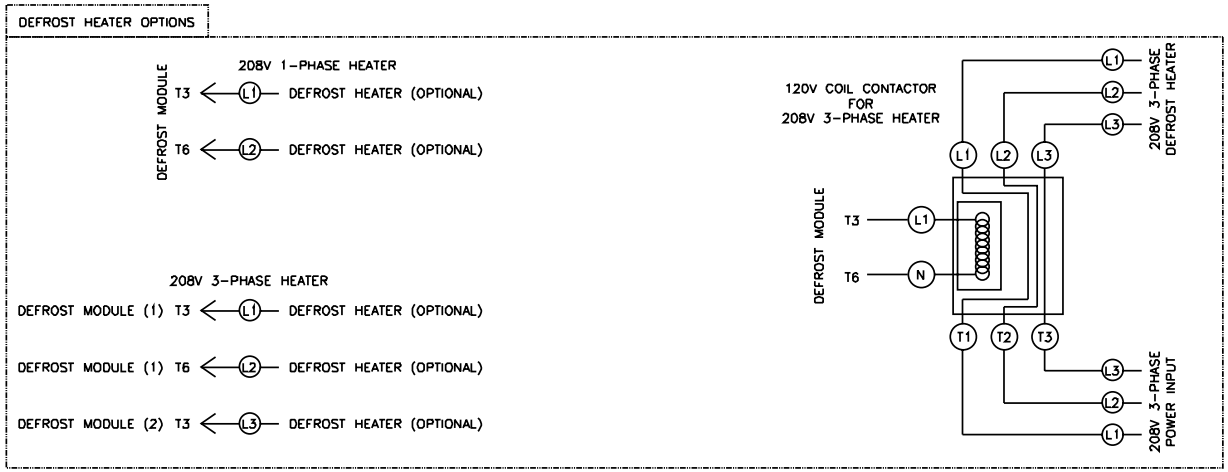

DEFROST MODULE

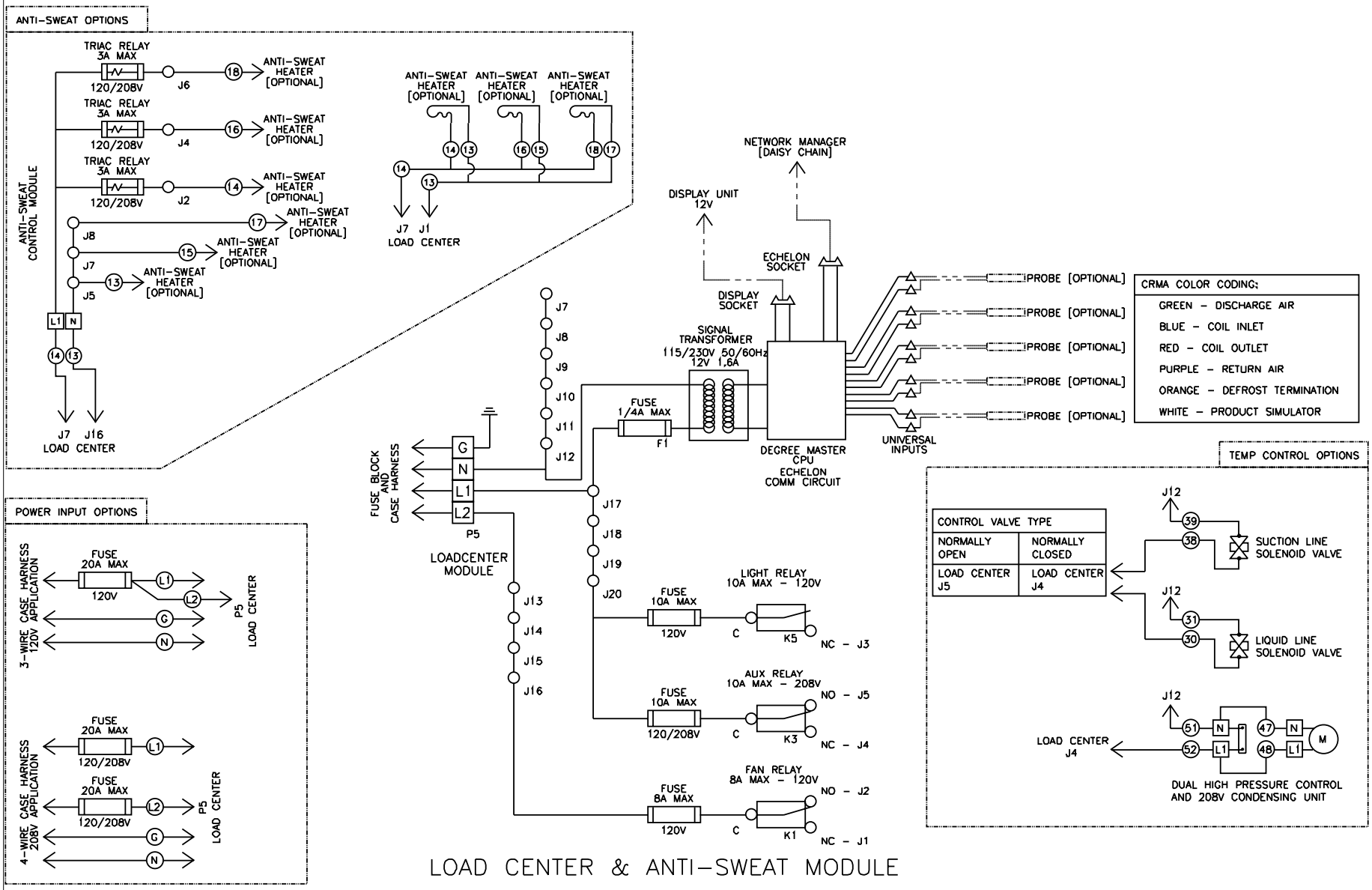

LOAD CENTER & ANTI-SWEAT MODULE

Hill PHOENIX™
EXCELLENCE

WARRANTY

HEREINAFTER REFERRED TO AS MANUFACTURER

FOURTEEN MONTH WARRANTY. MANUFACTURER'S PRODUCT IS WARRANTED TO BE FREE FROM DEFECTS IN MATERIAL AND WORKMANSHIP UNDER NORMAL USE AND MAINTENANCE FOR A PERIOD OF FOURTEEN MONTHS FROM THE DATE OF ORIGINAL SHIPMENT. A NEW OR REBUILT PART TO REPLACE ANY DEFECTIVE PART WILL BE PROVIDED WITHOUT CHARGE, PROVIDED THE DEFECTIVE PART IS RETURNED TO MANUFACTURER. THE REPLACEMENT PART ASSUMES THE UNUSED PORTION OF THE WARRANTY.

This warranty does not include labor or other costs incurred for repairing, removing, installing, shipping, servicing, or handling of either defective parts or replacement parts.

The fourteen month warranty shall not apply:

1. To any unit or any part thereof which has been subject to accident, alteration, negligence, misuse or abuse, operation on improper voltage, or which has not been operated in accordance with the manufacturer's recommendation, or if the serial number of the unit has been altered, defaced, or removed.

2. When the unit, or any part thereof, is damaged by fire, flood, or other act of God.

3. Outside the continental United States.

4. To labor cost for replacement of parts, or for freight, shipping expenses, sales tax or upgrading.

5. When the operation is impaired due to improper installation.

6. When installation and startup forms are not properly complete or returned within two weeks after startup.

THIS PLAN DOES NOT COVER CONSEQUENTIAL DAMAGES. Manufacturer shall not be liable under any circumstances for any consequential damages, including loss of profit, additional labor cost, loss of refrigerant or food products, or injury to personnel or property caused by defective material or parts or for any delay in its performance hereunder due to causes beyond its control. The foregoing shall constitute the sole and exclusive remedy of any purchases and the sole and exclusive liability of Manufacturer in connection with this product.

The Warranties are Expressly in Lieu of All Other Warranties, Express of Implied and All Other Obligations or Liabilities on Our Part. The Obligation to Repair or Replace Parts or Components Judged to be Defective in Material or Workmanship States Our Entire Liability Whether Based on Tort, Contract or Warranty. We Neither Assume Nor Authorize Any Other Person to Assume for Us Any Other Liability in Connection with Our Product.

MAIL CLAIM TO:

Hill PHOENIX
Display Merchandisers
1925 Ruffin Mill Road
Colonial Heights, VA 23834
804-526-4455

Hill PHOENIX
Refrigeration Systems &
Electrical Distribution Products
709 Sigman Road
Conyers, GA 30013
770-285-3200

A DOVER DIVERSIFIED COMPANY

Warning
Maintenance & Case Care

When cleaning cases the following must be performed PRIOR to cleaning:

To avoid electrical shock, be sure all electric power is turned off before cleaning. In some installations, more than one switch may have to be turned off to completely de-energize the case.

Do not spray cleaning solution or water directly on fan motors or any electrical connections.

All lighting receptacles must be dried off prior to insertion and re-energizing the lighting circuit.

Please refer to the Use and Maintenance section of this installation manual.

804-526-4455

Hill PHOENIX
EXCELLENCE™

A DOVER DIVERSIFIED COMPANY

1925 Ruffin Mill Road, Colonial Heights, VA 23834
Due to our commitment to continuous improvement all specifications are subject to change without notice.
Hill PHOENIX is a Sustaining Member of the American Society of Quality.
CRMA endorsed
Visit our web site at www.hillphoenix.com