M. RANSOM

CSC

CASE SERVICES CONTROLLER

INSTALLATION AND OPERATIONS MANUAL

VERSION 1

RELEASE : 1/16/95

EIL Part # 4464402900

ATTENTION

We strongly recommend that you read this CSC manual before installing this unit.

Chapter two concentrates on Installation

ALWAYS REMOVE POWER FROM THE REFRIGERATION SYSTEM PRIOR TO INSTALLING THE CSC

TABLE OF CONTENTS

CHAPTER 1 - USER ORIENTATION 1
- INTRODUCTION 1
- CSC HARDWARE OVERVIEW 3
  - Input Connection Board 3
  - CPU Board 3
  - Power Supply and Relay Board 4
- CDC (CASE DEFROST CONTROLLER) OVERVIEW 5

CHAPTER 2 - UNPACKING AND INSTALLATION INSTRUCTIONS 7
- UNPACKING 7
- CSC/CDC PLACEMENT 8
- CSC/CDC MOUNTING 9
  - CSC 9
  - CDC 10

CHAPTER 3 - WIRING AND LOAD HOOKUP 11
- COMMUNICATION CONNECTIONS 11
- INPUT SENSOR HOOKUP AND PLACEMENT 11
- OUTPUT LOAD CONNECTIONS 12
- CDC CONNECTIONS 12
- POWER CONNECTIONS 13

CHAPTER 4 - PROGRAMMING AND INTERROGATION 15
- INTRODUCTION 15
- STARTUP AND ID PROCEDURE 15
- HAND HELD PROGRAMMING 18
  - MAIN MENU 19
  - SETUP MENU 20
  - SETPOINT MENU 22
  - TOD MENU 25
  - STATUS MENU 27

CHAPTER 5 - TROUBLESHOOTING 29
- Communications Problems 29
- Control Problems 29
- Hand Held Problems 29

APPENDIX A - SETPOINT DEFINITIONS

APPENDIX B - WARRANTY AND REPLACEMENT PARTS

APPENDIX C - INSTALLATION DRAWINGS

CHAPTER 1 - USER ORIENTATION

INTRODUCTION

The CSC (Case Services Controller) is a micro-controller based unit which controls all aspects of a refrigerated case. A sturdy case houses the CSC's electronics and has been designed to fit in most wire raceways found in refrigerated cases. Mounting tabs make installation on top or under cases easy.

Control of electric defrost is provided via separate relays either in the CSC or in an assembly called the CDC (Case Defrost Controller). This assembly includes high current relays for control of 2 or 3 phase defrost as well as individual per-phase fusing. The CDC connects to the CSC via a 2 wire connection. If the relay is mounted in the CSC enclosure, the CSC is referred to as the "stretch" model because it is longer than the standard CSC. The relay mounted in the "stretch" case is two phase and is not fused. The CDC has also been designed to fit in most case raceways on a mounting plate.

Every energy consuming aspect of the case can be controlled and monitored by the CSC. The control areas include refrigeration (via refrigeration solenoid or pulse-type Electronic Expansion Valve), electric defrost, lights, anti-sweat heaters and an auxiliary load which may be mapped to fans, lights, defrost or refrigeration. These loads are individually fused. The functional inputs monitored by the CSC include evap-in, evap-out, discharge air, return air, two alarm sensors, two digital defrost initiation sensors such as the Demand Defrost™ Sensor and two digital defrost termination inputs. The hardware inputs are designed for maximum flexibility and include seven inputs which are programmable to accept either EIL TP1 or TP2 temperature sensors or a low voltage digital input. Also included are two 0-10V inputs and two 4-20MA sensor inputs.

The CSC is a fully programmable control which stores all setpoint data in non-volatile memory. The application code, also stored in non-volatile memory, is capable of being downloaded from the RC-2000 to the CSC, eliminating the need for EPROM changes at the CSC. Programming and interrogation of the CSC is handled through either

a hand-held terminal at the case or using the RC-2000 refrigeration controller. Although the RC-2000 is not used for actual CSC control operation, the RC-2000 is required for initial store installation of CSCs, CSC data logging and application program downloading. Remote setpoint programming of the CSC is also possible from the RC-2000. Communication between the RC-2000 and the CSCs, via RS-485 twisted pair wires, is transformer coupled for improved noise immunity and transient protection. The communications protocol and hardware is based on the Echelon® LONWORKS™ Technology. Up to 50 CSCs can be connected to one RC-2000.

CSC HARDWARE OVERVIEW

The CSC consists of three circuit boards within a metal enclosure. All signal inputs, primary power and load connections are made inside the CSC case. Both the CSC communication and the hand-held interface is connected external to the CSC enclosure. Access to the CSC is achieved via a removable lid which is fastened with two screws.

Input Connection Board

Upon removing the top cover you will see the CSC is divided into a low voltage section on the left side and a high voltage section on the right side. Figure seven illustrates the low voltage input connection board. This board plugs directly into the CPU board below it. All temperature and low voltage digital inputs are connected to this board via a terminal strip. The connector located on the 'neck' of the board is the LON® interface used to interconnect to other CSC units and to the RC2000. The small piggy back board on top is the LON® transceiver module which is required for communications to the RC-2000.

CPU Board

The CPU board contains the Echelon® 3150® micro-controller (which includes non-volatile setpoint storage) and 16 k bytes of EEPROM storing the application program for the CSC operation. This board also includes relay output drivers to activate the relays on the separate output board and RS-485 communications circuits for interface to the hand-held unit. One 32 k byte EPROM is provided for basic Echelon® specific startup code. The board has a modular RJ-11 type plug on the left side for connection of the hand-held terminal for local interrogation and programming of the CSC. There are two female connectors on the top for the input board connection. The male connector on the right side is used for connection to the power supply and relay board.

Power Supply and Relay Board

The Power Supply and Relay Board contains all the high voltage connections to and

from the CSC. The power switch and fuse for the CSC is located in the middle of the board. The power for the CSC is prewired at the factory for 120 volt operation. The male spade connectors (P6 - P11) are used to connect output power leads to the CSC per the following:

P6/P7:	L2 power connection to the Fan relay, the CSC power supply and the Anti-Sweat, Defrost, Refrigeration and EEV solid-state drivers
P8/P9:	L1 power connection to Lights and Auxiliary relays
P10/P11:	Neutral for the CSC power supply and the Defrost, Refrigeration and EEV solid-state drivers.

These power connections are prewired at the factory according to user needs. Each load output from the CSC is fuse protected according to the following:

F1: CSC Power (1/2A, 250V)
F2: Fan Load (20A, 125V)
F3: Light Load (20A, 125V)
F4: Ref/EEV valve drive (1/2A, 250V)
F5: AUX Load (20A, 125V)
F6: ASH Load (20A, 125V)
F7: Defrost drive (1/2A, 250V)

Although fuses F2, F3, F5 and F6 are 20 amp, the loads are design rated to 10 amps maximum.

Connections for Fans and Lights outputs are made directly to the associated relays N/C terminals. AUX relay connections are made directly to the AUX relay N/O or N/C contact. These connections must match the setting programmed in the software setup. Anti-sweat heater connection is made to P14 flag terminal. The refrigeration solenoid, AC or DC EEV and electric defrost drive are made via removable connectors located on the right hand side of the board. All outputs have corresponding LED indicators showing when the relay is energized. Depending, on the relay connection (N/O or N/C, the illuminated

LED could represent either an "output on" or " output off" condition. See figure 6 for details on output connections.

Power to the CSC is connected to TB1. There are two - five volt , three - twelve volt and one - nine volt dc regulators that supply low voltage power to the CSC circuits. There are two LED indicators for the power supply. One is for the raw five volt dc supply and the other is for the raw twelve volt dc supply.

CSC "Stretch" Overview

There is a model of the CSC that has one two pole relay mounted inside for defrost control. This relay is fused at 30 amps. It is intended for electric defrost loads. The relay will be pre-wired to the defrost output and terminals will be provided for connection.

CDC (CASE DEFROST CONTROLLER) OVERVIEW

The CDC or Case Defrost Controller provides relays for the CSC defrost control. These relays are pre-wired for 2 or 3 phase line voltage defrost. The CDC can be mounted in the raceway and is connected to the CSC defrost output via a two conductor wire. Each output is fused at 30 amps. Refer to figure 9 for more details.

Chapter 2

CHAPTER 2 - UNPACKING AND INSTALLATION INSTRUCTIONS

UNPACKING

1. Remove the CSC's or CDC's from their shipping container and verify that they have not been physically damaged.

2. You should receive:

   Requested order of CSCs.
   Requested order of CDCs.
   Install tool.
   Handheld terminal.
   120 ohm terminating resistors (supplied with RC-2000s).
   This manual!

3. If there is any damage or missing parts, notify the EIL Energy Controls Group sales department immediately at 410-584-7400 for assistance in correcting this situation.

CSC/CDC PLACEMENT

1. The CSC and CDC have been designed to fit within most wire raceways, or can be mounted to the top or bottom of any case.

2. Determine which area of the case will be most accessible for both servicing and wiring of the unit. Allow for at least six inches at both ends of the CSC so that the connectors on the side of the unit for the hand held and communication connections are easily accessible.

3. Choose an area that is free of water and excessive dirt and debris.

4. If electric defrost is used, the CSC and CDC may be separated. For example, if the CSC is mounted on top of the case, the CDC may be placed in the raceway to avoid pulling high current defrost wires to the top of the case.

5. With walk-in coolers, the CSC can be placed on top of, or on the side of the cooler. Care must be taken to avoid debris or product being stacked on or near the CSC. The CSC should not be mounted in the refrigerated space of a walk in cooler.

6. If the CSC or CDC is mounted in a box or wire raceway, mark the outside of the access panel to indicate the unit behind it.

7. Refer to figure 1 and 2 for dimensions, mounting hole locations and knockout locations for the CSC and CDC.

8. If the units are located close to the floor, be sure there is enough clearance underneath so that water and cleaning agents do not enter the cabinets.

CSC/CDC MOUNTING

CSC

1. Determine the proper location by following the guide lines outlined in the previous section for CSC placement.

2. If necessary, remove the CSC cover by loosening the thumb screw on each end.

3. The CSC can either be mounted from the bottom, or back depending upon the application. Mounting slots are found in the tabs attached to the end caps of the unit.

NOTE: On units using the back mounting slots, there is an additional mounting hole found on the inside of the unit for extra support.

4. Per-drill all mounting holes to prevent metal flakes from contacting the electronics within the unit.

5. Screw or bolt the CSC to the mounting location and replace the cover to avoid damage to the electronics in the unit.

CDC

1. Determine the proper location by following the guide lines outlined in the previous section for CDC placement.

2. If the CDC has been ordered with the enclosure, remove the CDC cover by loosening the thumb screw on each end.

3. Mounting holes are found inside the box on either side of of the CDC.

4. For CDCs which were not ordered with an enclosure, mounting slots are found on the ends of the mounting plate.

5. Per-drill all mounting holes to prevent metal flakes from contacting the electronics within the unit.

6. Screw or bolt the CDC to the mounting location and replace the cover to avoid damage to the electronics in the unit.

CHAPTER 3 - WIRING AND LOAD HOOKUP

COMMUNICATION CONNECTIONS

The network or "LON®" communication connection for the CSC consists of a two wire twisted pair which is daisy chained between the CSCs. See figure 4. Connector P1 on the input connection board marked "LON® INTERFACE" is the termination point for this connection. This connection is not polarity sensitive. There are two acceptable ways to connect the CSCs. The first way involves a run which is single ended. Which means the RC-2000 is at one end with a single CSC at the other end. At the end of this run a 120 ohm resistor must be installed at the CSC and jumper JP8 on the RC-2000 cpu must be installed. The second way involves two runs. Which means the RC-2000 is in the middle with two wires running to two separate CSCs. At the end of each run a 120 ohm resistor must be installed at the CSC and JP8 on the RC-2000 must be removed. The total length of the runs must be less than 4000 feet. The wire for the interconnection of CSCs and the RC-2000 should be 22 gauge non-shielded twisted pair, Belden 8442 or equivalent.

INPUT SENSOR HOOKUP AND PLACEMENT

All sensor inputs are brought in from the left side of the CSC and connected to the input connection board. All sensors should be wired with 18 gauge twisted pair wire. An analog or digital sensor can be connected to any of the seven A/D terminals. Sensors with 0-10 vdc outputs can be connected to either of the 0-10 A/D inputs. Sensors with 4-20 ma outputs can be connected to either of the 4-20 A/D inputs. The basic requirement for CSC operation using a refrigeration solenoid is a discharge and an optional return air sensor. Refer to figure 8 for placement locations. Using an EEV valve, there are up to four sensors needed. Discharge air, return air, (optional) evaporator in and evaporator out sensors. The discharge and return sensors are located per figure 8. The evaporator in sensor should be located as close to the first evaporator inlet fin (if case airflow here is acceptable) or up to 12 inches past the location of the first fin. In some cases fin removal may be required. The evaporator in sensor should not be located on the distributor tube. The evaporator out sensor should be located in the same place as the traditional TXV bulb location. The

sensors should be strapped tight, wrapped and sealed so that moisture or ice cannot influence the thermal transfer of temperature. Refer to figure 10 for installation details.

Up to two Demand Defrost™ sensors per case can be used for defrost initiation. This sensor should be placed on the uppermost or top coil in an evaporator assembly so that it will signal when ice buildup has exceeded acceptable operating limits. The sensor should be mounted so that the "U" is pointing up or down so that run off does not block the sensing window and cause defrosts. Sensor location will vary from case to case. The sensor should be wired as per figure 7.

OUTPUT LOAD CONNECTIONS

All outputs are brought out from the right side of the CSC. Wire sizes should be per local code requirements based on the current of the load being used. There are relay outputs for Lights, Fan and Aux outputs fused at 20 amps. A solid state device is used for the Anti-Sweat output fused at 20 amps. The Refrigeration valve, defrost load and EEV outputs are provided from plug connectors and are fused at 1/2 amp. Each of these outputs are designed to control one valve. The AUX relay output is fused at 20 amps and can be used for any of the output functions of the CSC. Either the N/O or N/C contact can be used, depending on the application. The AUX relay can be used for defrost where the defrost load is greater than 1/2 amp but no more than 10 amps, by connecting the load to the N/O contact. It is also used when driving multiple refrigeration valves by connecting the load to the N/C contact. When used to control valves, a snubber kit must be installed for coil spike reduction. Contact the factory for further details if this method is used. The Lights and Fans should connect to the N/C contact of the their respective relays. Flag terminals are provided for field connection to the relays and board terminations. See figure 6 for details.

CDC CONNECTIONS

The CDC uses a high current relay for switching defrost loads. It is fused at 30 amps. It can be configured to break one, two or three phases. For three phase operation, two relays are suggested to prevent service personnel from accessing a "hot" phase of a delta wired defrost load which is functionally OFF. Refer to figure 9 for details. When using

this module, the defrost signal from the CSC must be wired to the CDC terminals using 18 gauge wire. The load wires are connected in series and should be wired per local code requirements and load currents.

POWER CONNECTIONS

Input power connections are made to terminals block TB1. Terminals L1, L2 and G are for 208 volt operation. Even though 208 volt is powering the CSC the loads are at powered as 120 volt. If 120 volt input power operation is used, L1 and G are used and terminals L1 and L2 are jumpered. The wire size for the input must be made per local code requirements and be capable of handling all output load currents. The basic CSC requires 1/2 amp for idle operation.

Chapter 4

CHAPTER 4 - PROGRAMMING AND INTERROGATION

INTRODUCTION

The Case Services Controller can be programmed via an EIL hand-held terminal or through the RC-2000. The hand-held terminal plugs into to the CSC via an RJ45 modular type phone jack at the left side of the unit. The RC-2000 is connected to the CSC via the two wire 'LON®' network connection. The hand held consists of a 4x20 line LCD display and a 24 button keypad. The hand-held is activated by plugging it into the hand held connector on the CSC upon power up of the hand-held, the main menu will be displayed. Movement through the menus is accomplished by using the arrow keys on the keypad. To exit out of menus and return to the main menu use the ESC key. To move faster up or down, press the SHIFT key then the arrow keys. This will move the display four lines at a time.

STARTUP AND ID PROCEDURE

Each CSC can be started independently of each other at any time. CSCs can be added to the RC-2000 system at any time with a minor change to the CSC configuration screen on the RC-2000. As shipped from the factory, the CSCs will have application code installed so that the case can be operational as soon as the CSC is connected. Setpoint assignments and changes can be made with the hand-held programmer without the communications link established.

To power up the CSC, slide the power switch to the left. The two red power LEDs should light up. The outputs should all default to de-energized.

Once the communications link to the RC-2000 has been completed, the CSCs need to identify themselves as being on the bus to the RC-2000. This procedure can be done in any order. It is necessary for the CSCs to be ID'ed in order for the RC-2000 to communicate to them.

1. The case controller must first be ID'ed by using the RC 2000's CSC install screen.

- Enter the RC 2000 with the level 2 access code. Choose # 1 'Temp/Defr' control
- From the 'Temp/Defrost' menu choose #4 'CSC Control'.
- From the 'CSC Control' menu choose #7 'Install'
- When in the Install screen press the 'Enter' key and the cursor will move to the 'Select Action' line.
- Press 'Enter' once again and use the up arrow to find the 'Install ID' selection.
- Press 'Enter' once again and select the Range of units (ex: CSC start ID #5 CSC and end ID #10) or single unit (ex: Start ID #5 and end ID #5).
- The cursor should be sitting at the 'Start Now' line. Change this to Yes by using the 'Enter' key. The display will now read 'CSC #X Press CSC #X Service Pin.' (X = CSC number being installed).
- Insert the Install Tool into the hand-held connector of the CSC controller. Press the button **once**.
- The Install status will change to 'No Action' if only one CSC is being ID'ed. When multiple CSCs are being ID'ed, the "CSC#X" prompt will be displayed for each CSC as they are ID'ed.
- Repeat for all CSCs being installed.

2. The RC-2000 now has the CSC ID. If no menu comes up on the hand-held or CSC operating code is being updated, it will be necessary to download code to the controller at this point.

- Enter the RC 2000 with the level 2 access code. Choose # 1 'Temp/Defr' control
- From the 'Temp/Defrost' menu choose #4 'CSC Control'.
- From the 'CSC Control' menu choose #7 'Install'
- When in the Install screen press the enter key and the cursor will move to the 'Select Action' line.
- Press 'Enter' once again and use the up key to find the 'Install Code' selection.
- Press 'Enter' once again and select the Range of units (ex: CSC start ID #5 CSC and end ID #10) or single unit (ex: Start ID #5 and end ID #5).
- The cursor should be sitting at the 'Start Now line'. Change this to Yes by using the 'Enter' key. The display will now read 'Download XX%' The display will count up to 100% and some other status information will be displayed.
- After about 1 1/2 minutes the status will go to 'No Action' this indicates the

download is complete) or move to the next CSC (if multiple CSCs are being installed)

The individual status on the bottom of the screen will change to "4" if the code download is successful. If there are any beeps from the RC-2000 or the process stops before the download is complete, the download failed and there is probably a problem with the CSC controller. Refer to chapter 5, Troubleshooting for further information.

After the above steps have been completed, the CSC is totally on line. Changes made from the RC-2000 will be automatically sent to the CSC. Changes made at the CSC will be automatically sent back to the RC-2000. (This is true only if a previous receive has been done on a successfully installed CSC system. If not, the RC-2000 data will be incomplete and the download will also be incomplete.)

NOTE: If a program has to be remotely downloaded to a cleared RC-2000 which has case controllers, there is an extra process which must be performed to download the 'Node ID Table' to the RC-2000. This is the information for the RC-2000 to find the case controllers installed in the field.

- Download the RC-2000 program in the normal fashion.
- Enter the RC 2000 with the level 2 access code. Choose # 1 'Temp/Defr' control.
- From the 'Temp/Defrost' menu choose #4 'CSC Control'.
- From the 'CSC Control' menu choose #7 'Install'
- When in the Install screen press the 'Enter' key and the cursor will move to the 'Select Action' line.
- Press 'Enter' once again and use the up arrow to find the 'Update ID' selection.
- Move the cursor to the 'Start Now' and change to yes.
- Some data will go across the bottom of the screen and the update will be complete.

Chapter 4

HAND HELD PROGRAMMING

The following sections cover the programming of the CSC using the hand-held programmer. The hand-held can be inserted or removed at any time without affecting the operation of the CSC. The hand-held uses the arrow keys to maneuver around the screens. Pressing the 'Enter' key allows access to the fields to change data. Once in a data field, the numbers and arrows can be used to enter data. The 'Esc' key will exit from a field without changing the original data.

1. If the cursor is located at a non-programmable field, pressing the ENTER key advances you to the next field.

2. Pressing the down arrow automatically puts you at the first programmable field in the next line (or the last field if none are programmable)

3. Pressing the up arrow automatically puts you at the first programmable field of the previous line.

4. The cursor changes from a block to an underline to show
   a. that you are in a programmable field
   b. number or arrow keys can be used to select new data within the field.

There are four special function keys. They are for:
EMRG DEFR (emergency defrost), EMRG REFR (emergency refrigeration), CASE OFF and NORMAL OP (normal operations). The emergency defrost key will allow the user to set the case into a time or normal defrost cycle. The emergency refrigeration key will allow the user to set the case into a refrigeration override condition or just override the EEV % (if used). The case off key will shut the case down. This is useful if the case is experiencing problems and will be empty for some time or if the case is being cleaned or serviced. The normal operation key allows the case to be returned to normal operations. This clears out any emergency functions or the case off function. This key also allows access to the alarm override function.

Chapter 4

Chapter 4

MAIN MENU

```
V1.1DS
1> Status 3> TODs
2> Setpts 4> Setup
```

The Main Menu is displayed when the hand held unit is first plugged in. There is no access codes required for any changes in the CSC using the hand held unit. The version number (V1.1DS) indicates the application code version currently in use by the CSC. The version may change depending on the version of CSC code used. This number may be needed when corresponding with the EIL field service or engineering group.

The first menu used to program the CSC is 'Setup'. The setup menu will program the CSC for the control configuration desired. The 'Setpoints' should be assigned next. Then any 'TOD' setpoints should be set and finally the 'Status' should be viewed to confirm operation and determine any changes needed. Changes can be made at any time.

SETUP MENU

```
EIL CSC - 4> Setup
Refr Ctrl          EEV
Aux Relay          Defr

Defr Start         Dig
Defr Stop          Dig
Fans:Defr          Norm
ASH: Defr          Norm
Lights:Defr        Norm
Lights:Hi Alrm     Norm
Fan Dly            No
Inputs     Type    Chan
Evap In    TP-2    01
Evap Out   TP-2    02
Case1      TP-2    03
Case2      TP-2    04
Alarm1     TP-2    00
Alarm2     TP-2    00
Dmd Strt1  n/a     00
Dmd Strt2  n/a     00
Def Term1  n/a     00
Def Term2  n/a     00
```

The 'Setup' menu shows all configuration options for the CSC as well as the sensor assignments.

The 'Refr Ctrl' can be either 'Refr' for the standard solenoid valve or 'EEV' if an electronic expansion valve is used.

The 'Aux Relay' can be assigned to any output function including those with a TOD schedule. This is useful under certain conditions when the normal output is not capable of adequately controlling the load.

The 'Defr Start' and 'Defr Stop' are either 'Time' or 'Dig'. Time defrost allows for starting based on the defrost start times and stopping based on the defrost duration. Digital allows for start and stop based on digital signals. For example, a Demand Defrost™ sensor may be used for starting defrost and a "Clixon" may be used for stopping defrost.

The next four lines determine the behavior of the labeled loads during defrost. 'Norm' indicates normal control of loads during defrost. 'Off' indicates the load will be off during defrost. For example, during defrost you may want the case lights to be off.

'Fan Dly' allows for a programmable time on the setpoint screen for the fans to delay after defrost before coming back on.

The 'Inputs' area determines the sensor type and connection assignments. The sensor 'Type' must match the actual sensor connected to the input connection board. The 'Chan' column programs the controller to the hardware termination point of the input sensors. The Input connection board has numbered terminals labeled A/D#. The number is assigned here. If a type and channel are both programmed incorrectly, setting the type to "N/A" automatically clears the related channel assignments.

SETPOINT MENU

```
EIL CSC - 2> Setpts
Cut-In          00f
Cut-Out         00f

Hi Alarm        20f
Lo Alarm        00f
Evap TD         00f
Defr Term       00f
Fan Start       00f
ASH Hi          00f
ASH Lo          00f
Refr Off        00m
Def Duration    30m
Def Off Max     12hr
Run Off         00m
Fan Dly         00m
Alarm Dly       00m
ASH Period      00m
```

The Setpoints screen shows all setpoints that can be programmed in the CSC. Some of these fields may be different depending on the setup configuration of the CSC.

The 'Cut In' and 'Cut Out' setpoints are for the refrigeration control operation. When the case temperature is above the cut-in value, the refrigeration will come on. When the case temperature is below the cut-out temperature, the refrigeration will go off. When a 'Cut In' is programmed, the 'Cut Out' defaults to one degree less.

The 'Hi Alarm' and 'Lo Alarm' determine the threshold for the alarm indication. the 'Hi Alarm' is based on the highest sensor temperature and the 'Lo Alarm' is based on the lowest sensor temperature. Alarm information will be sent to the RC-2000 alarm log.

'Evap TD' is used to set a coil temperature difference for the EEV control of refrigeration. This value should be the desired difference between the evaporator in and evaporator out temperatures. The EEV will modulate accordingly to maintain this value.

The 'Defr Term' value is the temperature at which defrost will terminate as the temperature rises during a defrost.

'Fan Start' is the temperature value where the fan will start as the temperature is dropping after defrost. The case temperature must be below this value for the fan to start.

'ASH Hi' and 'ASH Lo' determines the window that the ASH heaters will operate. These are based on the dewpoint temperature as reported to the CSC from the RC-2000. When the dewpoint is above the 'ASH Hi' value, the ASH heater will be on 100%. When the dewpoint is below the 'ASH Lo' value the ASH heater will be completely off. In between these values, the ASH heater will be cycled accordingly to keep moisture and frost from forming on the case.

'Refr Off' is the min time the refrigeration valve will be off following a refrigeration on period. This will prevent short cycling of the valve.

The 'Def Duration' is the time period that the defrost cycle will run. This period will run its duration unless terminated by temperature or digital termination.

'Def Off Max' allows for a maximum period of time to be set that the defrost cycle will be skipped, based on the Demand Defrost™ sensor. If a defrost has not occurred within this period, a defrost will be initiated.

'Fan Dly' delays the refrigeration from coming back on after a defrost. If the coil termination does not reach a desired temp after this time, the refrigeration will turn on.

'Alarm Dly' is the time period after an alarm condition has occurred that must pass

before an alarm is signaled.

The 'ASH Period' determines total period that the ASH heater will be cycled in. In between the 'ASH Hi' and ASH Lo' values the ASH heater will be duty cycled based on this period.

TOD MENU

```
EIL CSC - 3> TODs
Thr              00:00
Defr Start

00:00  00:00  00:00
00:00  00:00  00:00

Lights   On     Off
Sun     00:00  00:00
Mon     00:00  00:00
Tue     00:00  00:00
Wed     00:00  00:00
Thu     00:00  00:00
Fri     00:00  00:00
Sat     00:00  00:00

Aux      On     Off
Sun     00:00  00:00
Mon     00:00  00:00
Tue     00:00  00:00
Wed     00:00  00:00
Thu     00:00  00:00
Fri     00:00  00:00
Sat     00:00  00:00
```

The TOD menu allows setpoints for the defrost initiate times, lighting loads and AUX relay to be programmed.

The 'Defr Start' times are the times when scheduled defrost will occur. Up to six times are provided per day.

The Lighting schedule will control the operation of the Lights relay.

If the AUX relay is assigned to a TOD related output, a separate time of day schedule can be assigned in the same way the lights were.

STATUS MENU

```
EIL CSC -  1> Status
Ref Off    Case  TDif
ASH On 60%  10f   05f

Setpoints    20f   05f
Inputs      Offst  Act
Evap In      00f   10f
Evap Out     00f   05f
Case1        00f   00f
Case2        00f   00f
Dewpoint           00f
Alarm1             00f
Alarm2             00f
Dmd Strt1          Off
Dmd Strt2          Off
Def Term1          Off
Def Term2          Off

OUTPUTS:     OVR   ACT
Fans         none   On
Lights       none   On
Refrig       none   On
Defrost      none  Off
ASH          none  Off
Aux          none  Off
Rack Number          00
```

The 'Status' screen shows the operational values for all inputs and outputs. For sensors the actual value is on the right column. If a sensor offset is used, it is displayed in the center column. For the outputs, the actual status is on the right column while any override condition is displayed in the center column. All sensor offset and relay overrides are done from this screen.

Chapter 5

CHAPTER 5 - TROUBLESHOOTING

Communications Problems:

Communications problems are usually related to wiring errors. The first thing to check is the integrity of the wire connections at each CSC. Since the wiring is not polarity sensitive, verification of good connections is sufficient. The layout of the communications runs must be as shown in figure 4. The terminating resistors can cause problems if they are not installed correctly. They must be installed in the proper locations as shown in figure 4. The RC-2000 JP8 must be set according to the type of wire pattern used. Again refer to figure 4. The terminating resistor must be 120 ohms. If the problem is a communication failure to communicate to the RC-2000, the CSC ID should be re-installed through the RC-2000.

Control Problems:

Many control related problems are related to either improper programming, wiring or fuse problems. First check the wiring for good connections and that the loads are connected to the proper terminals on the CSC. Check the fuses. If they are blown the reason should be determined and corrected. (In **no** case should the standard fuse value be replaced with a higher value)

Hand Held Problems:

The hand held connects to the CSC using a six conductor phone cable. The cable should be checked using a cable tester. It should be verified that CSC is powered up and the power LEDs are lit. If the display lights but the characters are not intelligent, the setup of the hand held has been corrupted. Consult the factory for instructions.

Problems not covered above should be directed to the EIL field service department.

Chapter 5

APPENDIX
A

Setpoint Definitions

Appendix A

Cut In/Cut Out:	Degree F - Temperature control - 2 digits . Use the up/down arrow keys to toggle the +/- signs. Low temp range is from -30 F to +97 F. When the temp goes above the Cut In setpoint the Refrigeration Relay will turn on. It will turn back off when it goes below the Cut Out setpoint. All sensors will average the Temperature for control.
HIGH ALARM : & LOW ALARM:	Degree F - 2 digits Programmed values to Alarm if the Temp sensors equals or exceeds these values.
Evap TD:	Degree F - 2 digits. The desired temperature difference across the coil measured from the evaporator in and evaporator out temperature sensors.
DEFROST TERM:	Degree F- 2 digits. Programmed value to Terminate the Defrost. All Termination Sensors must reach the setpoint prior to completing the Defrost. Lowest value will be displayed.
REFRIG Off:	Seconds - 2 digits - Amount of time the Refrigeration must remain off to prevent short cycling.
ALARM DELAY:	Minutes - 2 digits - Amount of time Alarm goes into a pending mode, this takes place after the temp has reached the Alarm Setpoints. Alarm is inactive during Defrost and 15 minutes plus the Delay time following a Defrost at which time the Delay becomes active.
DEF DURATION:	Minutes - 2 digits - Failsafe value. If the Defrost Temp does not reach termination.
DEFROST TIME	The programmed times for timed defrost to begin.
FAN START:	Degrees F - 2 digits. The temperature which the fan will restart at after a defrost. The temp must be below this value.
FAN DLY:	Minutes - 2 digits - (See Fan Start) Failsafe time required prior to starting Fans. The fans will be forced on following this time if the temperature has not reached the programmed value.
RUN OFF:	Minutes - 2 digits - Following a defrost the Circuit will not permit Defrost or Refrigeration to be active. This allows for water drainage and equalization of the Refrigerant.

DEFROST TIMES/:	4 digits - Can program up to 6 Defrost times using a 2400 hour clock.
DEF TERM INPUT:	Digital Assignment - Upon a contact closure on the Digital Input the Defrost will end. Termination Sensor cannot work in conjunction. If there is no contact closure, the Defrost will terminate at the end of the duration.
TEMP SENSORS:	Sensor Assignment up to 2 sensors. All sensors will be averaged. The CSC will cycle the Refrigeration based on this Temperature. The average will be displayed on the Status Screen as the Temperature. (See Cut In and Cut Out)
ALARM SENSORS:	Sensor Assignment up to 2 sensors. All sensors are monitored. If any sensor exceeds the High or Low programmed value, the Alarm will activate an Alarm Pending State. This will be displayed on the Status Screen showing the Highest or Lowest Temp values. (See High and Low Alarms)
TERM SENSORS:	Sensor Assignment up to 2 sensors. All sensors must reach the Termination temperature. The computer will look for the lowest temp and display this value in the Status Screen. (See Defrost Term)
REFRIG OUTPUT:	Connected to removable plug. Fused at 1/2 amp - Will cycle Refrigeration on and off when required by program
DEFROST OUTPUT:	Connected to removable plug. Fused at 1/2 amp - Will cycle Defrost on and off when required by program
FAN RLY:	Relay Assignment - Connects to N.C. contacts. (See Evap Fan Start) Starts Evaporator Fan when conditions are correct.
MAXIMUM DEFROST OFF:	Programmed time in hours - This value is used with the Demand Defrost™ initiation feature to allow a failsafe period of time that a circuit can go without a defrost cycle. If this time expires without a defrost, the circuit will initiate a normal defrost cycle.
DEF INIT INPUT:	Digital Assignment - Upon a contact change on the Digital Input the Defrost will begin. It will honor the duration and termination. If Def Start times are programmed, the Defrost will honor both the programmed time and the Digital Input before activating the Defrost cycle. Two inputs are available.
RACK NUMBER:	2 digits - This allows a graph of the CSC to indicate the rack suction pressure.

Appendix A

APPENDIX
B

WARRANTY
AND
REPLACEMENT PARTS

Appendix B

WARRANTY

EIL Instruments Inc., will for one year after date of purchase of any EIL product, correct any defect in workmanship or material. Such corrective measures will be limited to repairing or replacing the unit, at EIL's option. This limited warranty shall not apply to equipment which has been subjected to negligence, accident, or damage by operation, maintenance or storage, or to other than normal use or service. This limited warranty does not cover reimbursements for transportation, removal, installation, or repair or replacement, except as may otherwise be specifically agreed to in writing by EIL Instruments.

THE FOREGOING IS IN LIEU OF ALL OTHER WARRANTIES EXPRESSED OR IMPLIED, AND ALL OTHER OBLIGATIONS OR LIABILITIES WHETHER ARISING UNDER CONTRACT, NEGLIGENCE OR OTHERWISE, ON THE PART OF EIL. IN NO EVENT SHALL EIL BE LIABLE FOR CONSEQUENTIAL OR SPECIAL DAMAGES, INCLUDING BUT NOT LIMITED TO LOSS OF USE, LOSS OF INCOME, LOSS OF PROFIT OR COST OF REPLACEMENT.

Echelon, LON and 3150 are U.S. registered trademarks of Echelon Corporation.

LONWORKS is a trademark of Echelon Corporation.

Demand Defrost is a U.S. registered trademark of Demand Defrost Systems.

Appendix B

CSC/CDC Replacement Parts

PART NUMBER	DESCRIPTION
20021400	Case Service Controller
20021401	Case Service Controller w/Defrost Relay(stretch)
20030400	Case Defrost Controller, 3 Phase (w/o encl.)
20030401	Case Defrost Controller, 3 Phase (with encl.)
20022400	Case Defrost Controller, 1 Phase (w/o encl.)
20022401	Case Defrost Controller, 1 Phase (with encl.)
20030403	Hand Held Programming Unit with Cable
20027400	Case Installation Tool (Button)
5120003400	CPU Board
5120004400	Relay Board
5120005400	Input Board
TP-1C	-30 to 97 Plastic Temp Probe
TP-1H	0 to 255 Metal High Temp Sensor
TP-1L	-30 to 97 Metal Low Temp Sensor
TP-2	-30 to 97 Case/Evaporator Temperature Sensor
4464402900	CSC Instruction Manual

REPAIR PROCEDURE:

If repair of a part is required, please use the following procedure:

1. Call EIL Instruments - (410) 584-7400 ext 289 for a repair order (R.O.) number.

2. At that time the following is required:

a. Purchase order # for the unit to be repaired.
b. As much information as possible regarding the nature of the equipment problem.
c. Serial number of the unit and date of purchase.
d. Previous repair history, if applicable.

3. Send the item to be repaired to:

EIL Instruments, Inc.
Energy Controls Group
10946A Golden West Drive
Hunt Valley, Maryland 21031

4. The R.O. number should be clearly marked on the outside of the shipping carton and all applicable paperwork should be included with the shipment, inside the carton.

5. Warranty on repaired units will be 90 days from the date of shipment from EIL Instruments.

ADVANCE SHIPMENTS

6A. If "Advance Shipment" of a replacement component or parts is required, under certain circumstances EIL will do so, provided that a purchase order number is issued and with the understanding that the customer will bear responsibility for excess freight charges and further agrees to return the defective component or parts within 15 days of receiving the "Advance Shipment".

Appendix B

6B. After the defective component/system/parts are received back at EIL, they will be repaired and upgraded to current operational standards; ie: restored to "Like New" condition, and the customer will be billed for the restoration work at the standard repair charge rate.

APPENDIX
C

INSTALLATION DRAWINGS

Field Wiring Reference Guide

Sensor Wiring:

2 wire ,18 awg, shielded twisted pair cable; Belden 8760 or equivalent.
Maximum length: 200 feet.

Demand Defrost™ Sensor Wiring:

4 wire, 18 awg, shielded twisted pair cable; Belden 9552 or equivalent.
Maximum length: 200 feet.

EEV Valve Wiring:

2 wire, 18 awg, unshielded twisted pair; Belden 9409 or equivalent.
Maximum Length: 50 feet.

Communications Wiring, RC-2000 to CSC, CSC to CSC:

2 wire, 22 awg, unshielded twisted pair; Belden 8442 or equivalent.
Maximum length: 4000 feet.

If sensor lengths are exceeded or noisy environments are encountered, slight sensor offsets may be necessary at the appropriate CSC.

EIL INSTRUMENTS, INC.

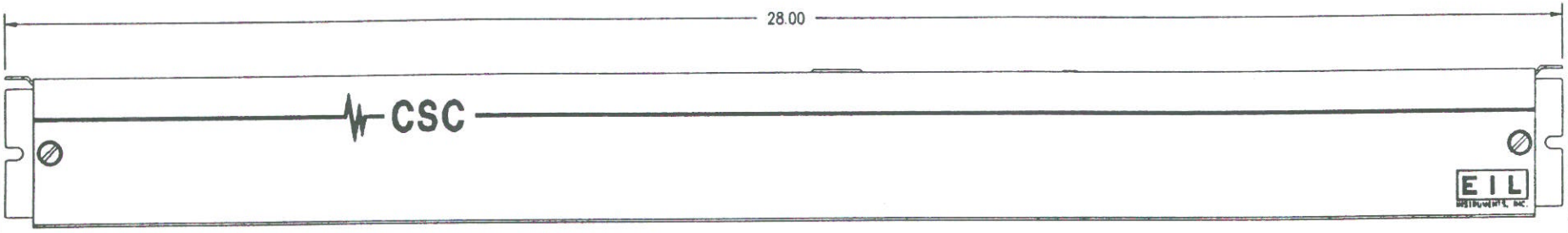

CASE SERVICES CONTROL

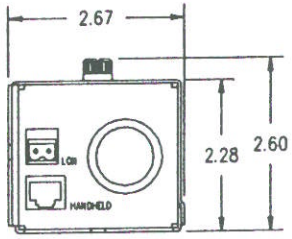

CSC LEFT END CAP VIEW

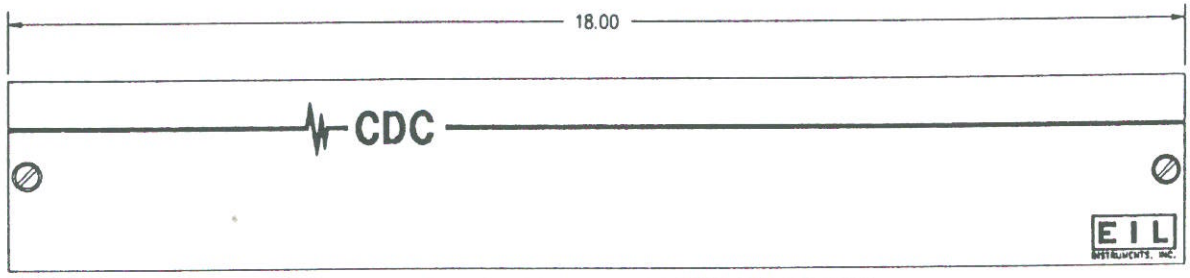

OPTIONAL ENCLOSURE FOR CASE DEFROST CONTROL.

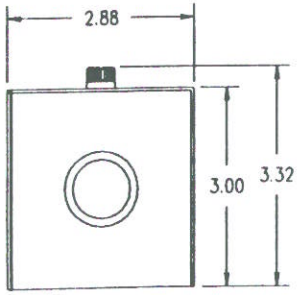

CDC LEFT END CAP VIEW

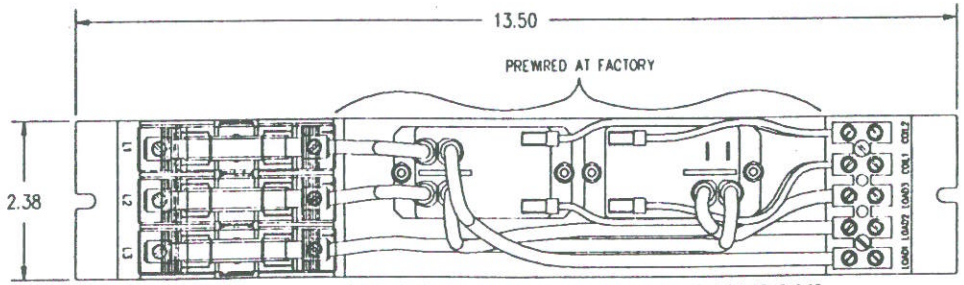

HEIGHT OF DEFROST CONTROL NOT IN OPTIONAL CDC ENCLOSURE IS 2.65

3 PHASE CASE DEFROST CONTROL

NOT SHOWN - 208 SINGLE PHASE CASE DEFROST CONTROL (SAME DIMENSIONS AS 3 PHASE)

FIGURE 1

EQUIPMENT SIZE SPECIFICATION

EIL INSTRUMENTS, INC.

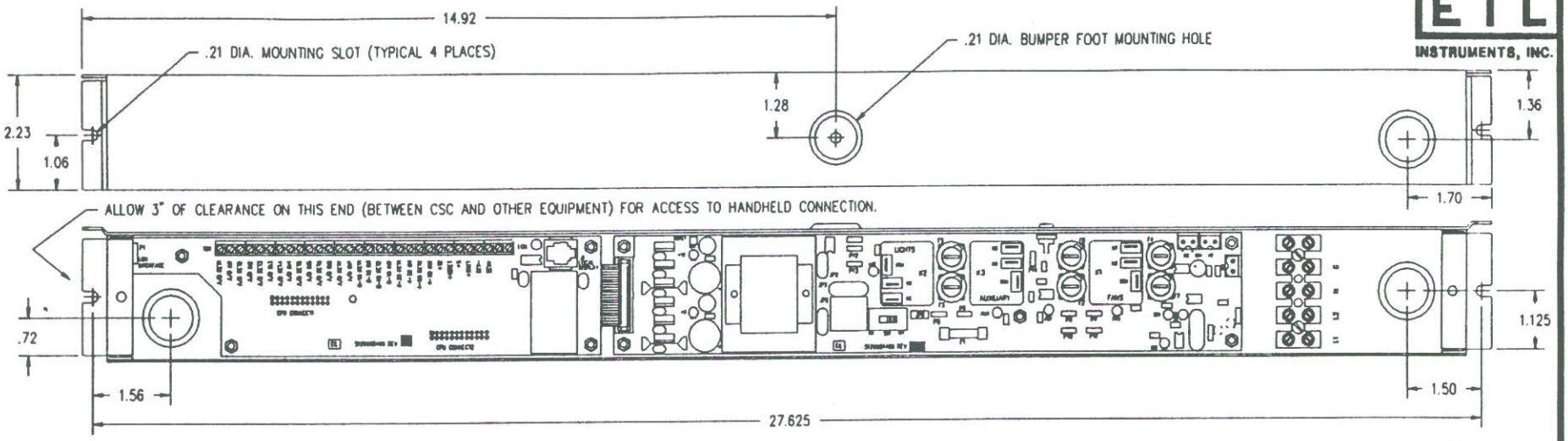

CASE SERVICES CONTROL

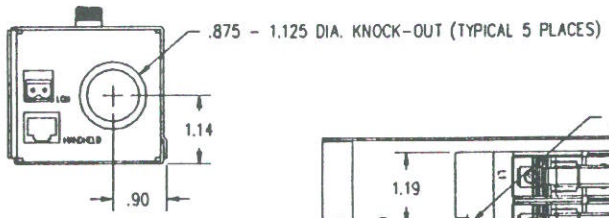

CSC LEFT END CAP VIEW

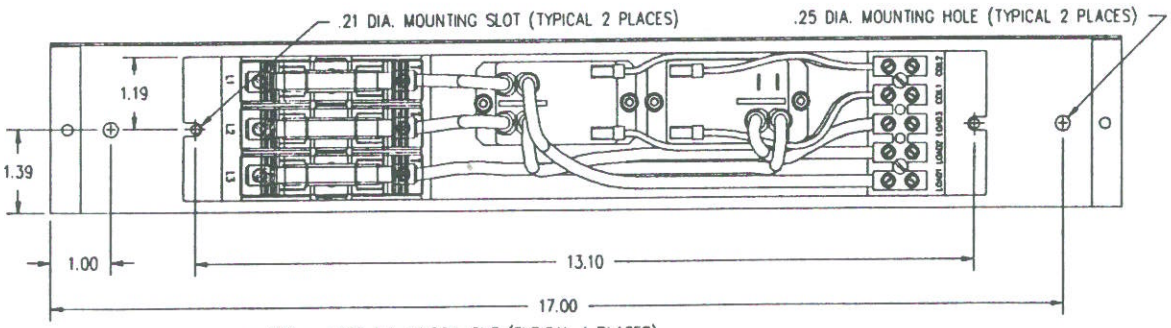

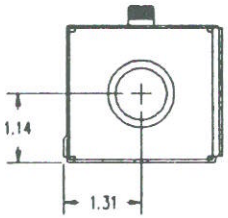

CSC RIGHT END CAP VIEW

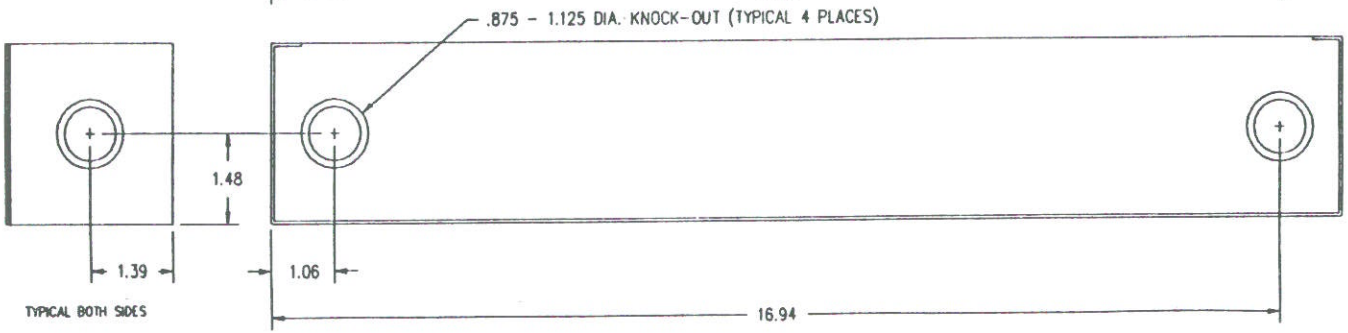

TYPICAL BOTH SIDES

3 PHASE CASE DEFROST CONTROL

SHOWN MOUNTED IN OPTIONAL CDC ENCLOSURE

FIGURE 2

EQUIPMENT MOUNTING SPECIFICATION

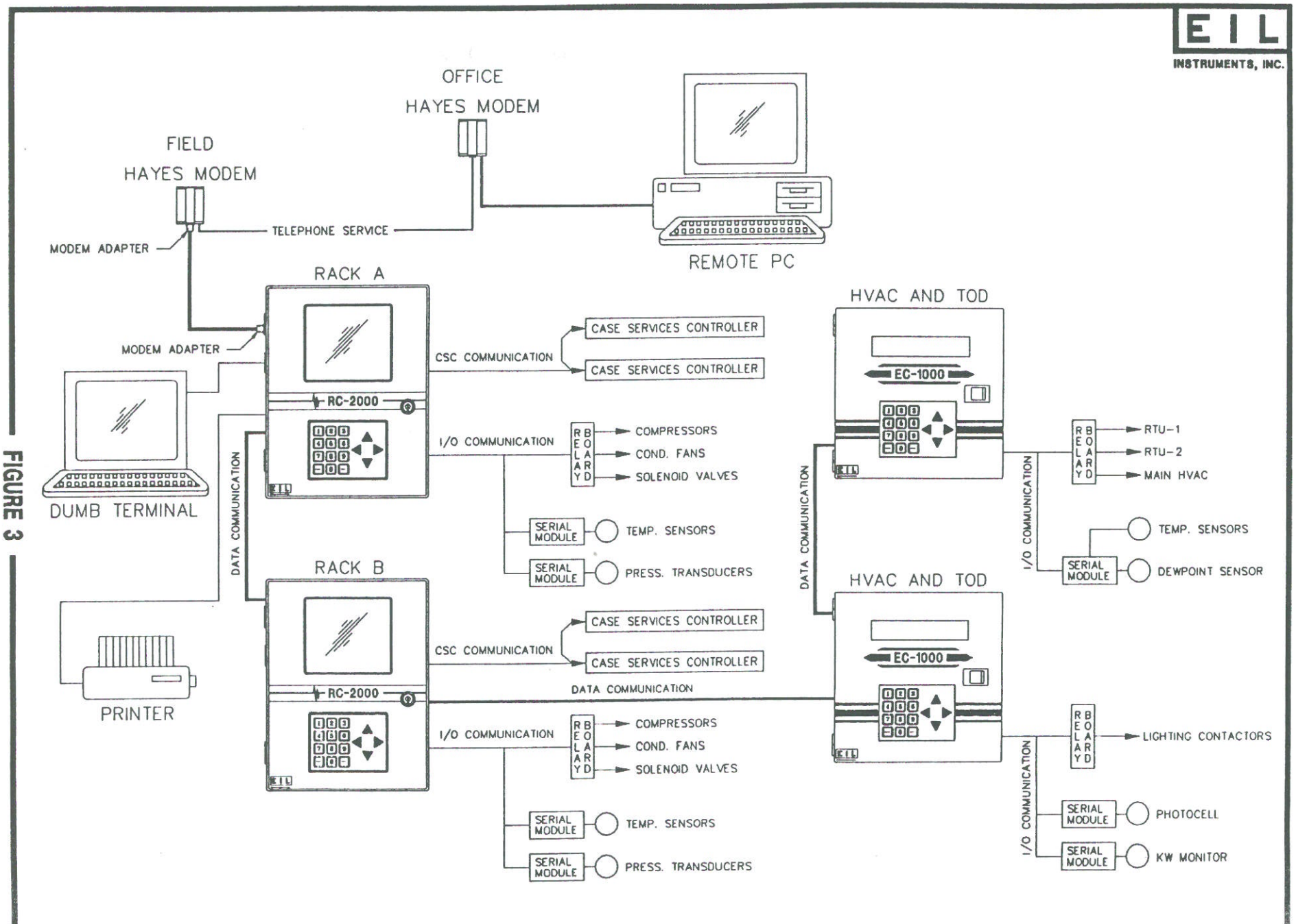

FIGURE 3

TYPICAL BLOCK DIAGRAM ENERGY MANAGEMENT SYSTEM

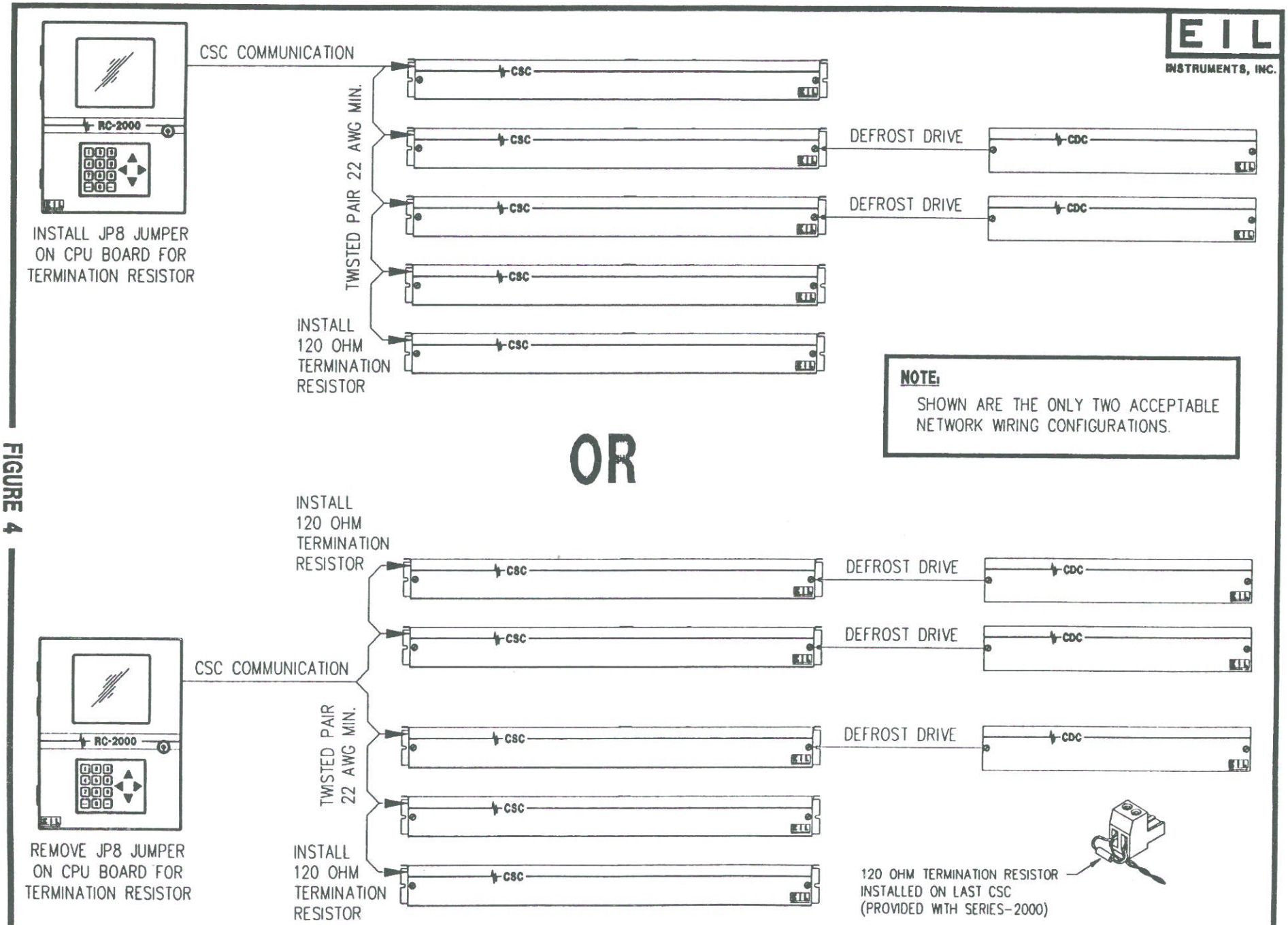

FIGURE 4

CASE SERVICES CONTROL NETWORK CONNECTION OVERVIEW

EIL INSTRUMENTS, INC.

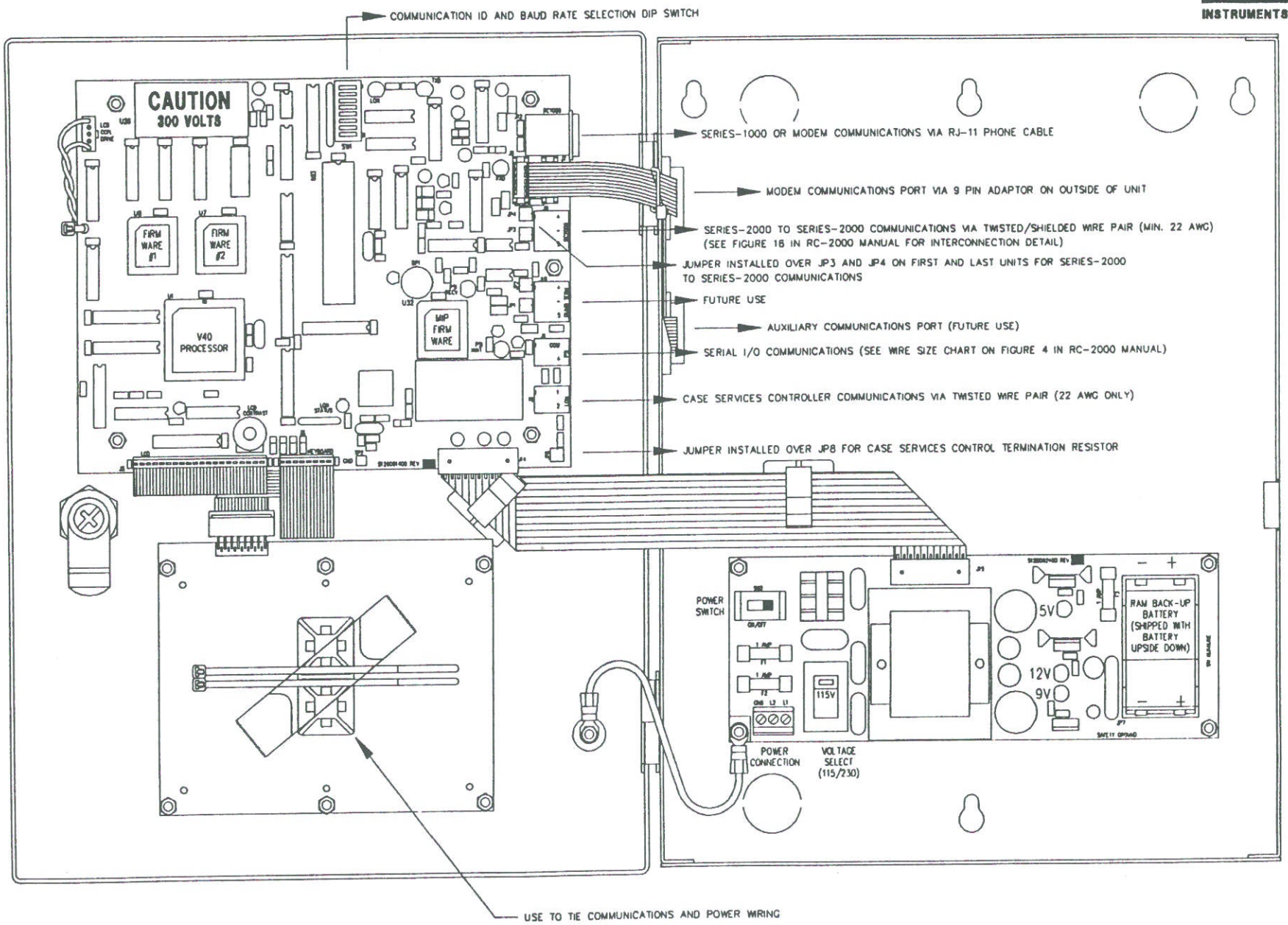

FIGURE 5

SERIES 2000 POWER AND I/O CONNECTION

EIL INSTRUMENTS, INC.

CSC POWER		
CONNECTION	115V	208V W/NEUTRAL
P6	JUMPER TO P9	NOT USED
P7	LINE POWER (TB1-L1)	LINE 1 POWER (TB1-L1)
P8	NOT USED	NOT USED
P9	JUMPER TO P6	LINE 2 POWER (TB1-L2)
P10	NOT USED	NOT USED
P11	NEUTRAL (TB1-N)	NEUTRAL (TB1-N)
JP2	JUMPER INSTALLED	JUMPER INSTALLED
JP3	NOT USED	NOT USED
JP4	JUMPER INSTALLED	JUMPER INSTALLED
JP5	NOT USED	NOT USED

RELAY	CSC OUTPUT*
K1	NC TERMINAL TO FAN LOAD
K2	NC TERMINAL TO LIGHT LOAD
K3**	NO TERMINAL TO DEFROST LOAD OR NC TERMINAL TO FAN/LIGHT/REFRIG SOLENOID LOAD
P14	TO ANTI-SWEAT HEATER LOAD

* ONLY THE HOT SIDE OF EACH LOAD IS WIRED THROUGH THE CSC.
** CONNECTIONS DEPEND ON USER ASSIGNMENT OF AUX RELAY.

FACTORY WIRED FOR 208V UNLESS LABELED "115V"

P12 & P13 HIGH VOLTAGE DIGITAL INPUTS

F5=AUX FUSE (12A MAX)
F3= LIGHTS FUSE (12A MAX)

P14= ASH

TO 120VDC PULSE TYPE EEV

TO 120VAC PULSE TYPE EEV OR REFRIG SOLENOID

TO EIL CASE DEFROST CONTROLLER (COIL1/COIL2)

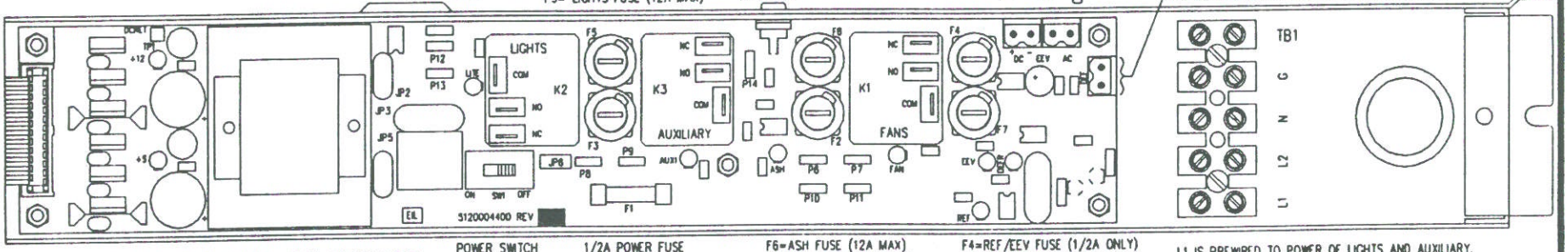

CASE SERVICES CONTROLLER

POWER SWITCH

1/2A POWER FUSE

F6=ASH FUSE (12A MAX)
F2=FANS FUSE (12A MAX)

F4=REF/EEV FUSE (1/2A ONLY)
F7=DEFROST FUSE (1/2A ONLY)

L1 IS PREWIRED TO POWER OF LIGHTS AND AUXILIARY.
L2 IS PREWIRED TO POWER OF ASH, FANS, DEF AND EEV PLUGS

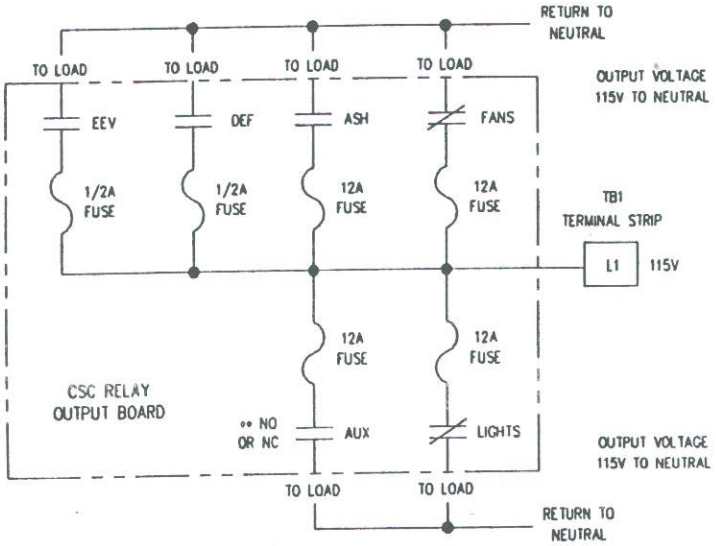

115V ELECTRICAL DISTRIBUTION OUTPUT

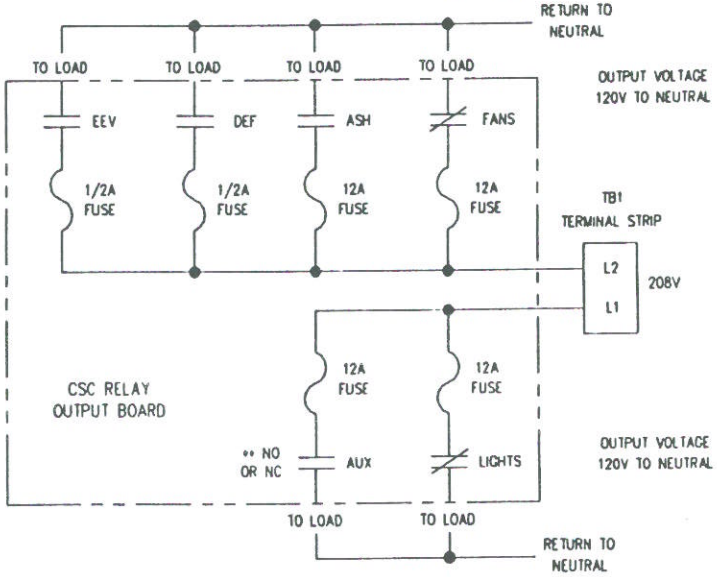

208V ELECTRICAL DISTRIBUTION OUTPUT

FACTORY WIRED FOR 208V UNLESS LABELED "115V"

CASE SERVICES CONTROL RELAY OUPUT AND POWER WIRING

FIGURE 6

EIL INSTRUMENTS, INC.

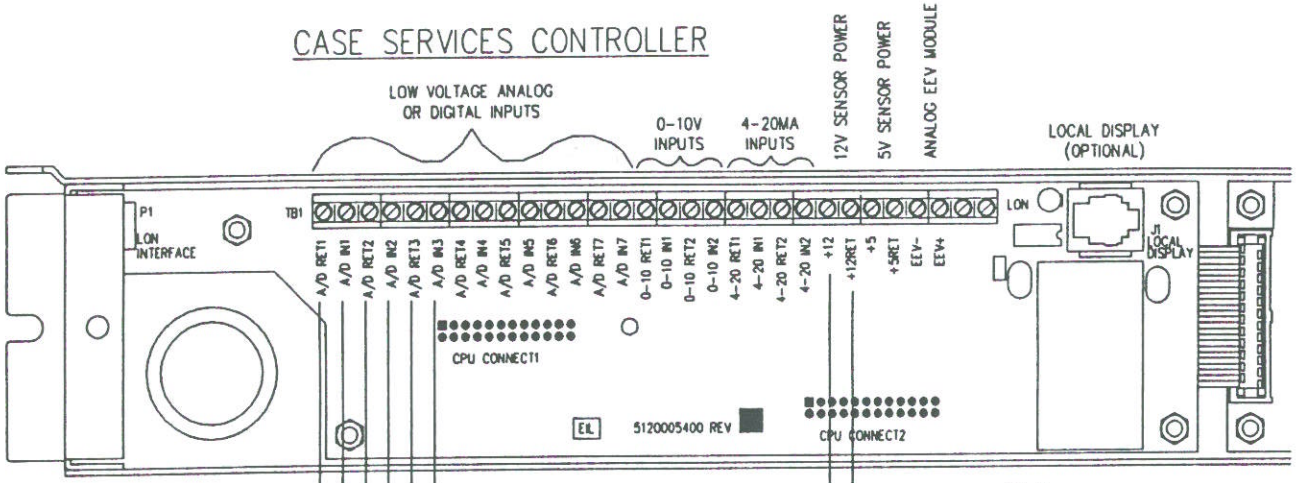

CONNECTION	CSC SIGNAL INPUT
A/D RET1	COIL INLET TEMP SENSOR RETURN
A/D IN1	COIL INLET TEMP SENSOR INPUT
A/D RET2	COIL OUTLET TEMP SENSOR RETURN
A/D IN2	COIL OUTLET TEMP SENSOR INPUT
A/D RET3	DISCHARGE AIR TEMP SENSOR RETURN
A/D IN3	DISCHARGE AIR TEMP SENSOR INPUT
A/D RET4	RETURN AIR TEMP SENSOR RETURN
A/D IN4	RETURN AIR TEMP SENSOR INPUT
A/D RET5	DEFROST START DIGITAL INPUT RETURN
A/D IN5	DEFROST START DIGITAL INPUT
A/D RET6	DEFROST STOP DIGITAL INPUT RETURN
A/D IN6	DEFROST STOP DIGITAL INPUT
A/D RET7	CLOGGED DRAIN SENSOR INPUT RETURN
A/D IN7	CLOGGED DRAIN SENSOR INPUT
0-10 RET1	COIL OUTLET PRESSURE SENSOR RETURN
0-10 IN1	COIL OUTLET PRESSURE SENSOR INPUT
0-10 RET2	N/A
0-10 IN2	N/A
4-20 RET1	N/A
4-20 IN1	N/A
4-20 RET2	N/A
4-20 IN2	N/A
+12	DEMAND DEFROST SENSOR POWER*
+12RET	DEMAND DEFROST SENSOR POWER RETURN
+5	N/A
+5RET	N/A
EEV-	EIL ANALOG EEV MODULE COMM-
EEV+	EIL ANALOG EEV MODULE COMM+
P12	HIGH VOLTAGE DIGITAL IN (115/230V)
P13	HIGH VOLTAGE DIGITAL IN RETURN

* CONNECT A 470 OHM 1/2 WATT RESISTOR BETWEEN THIS OUTPUT AND THE DEMAND DEFROST SENSOR POWER "+" INPUT.

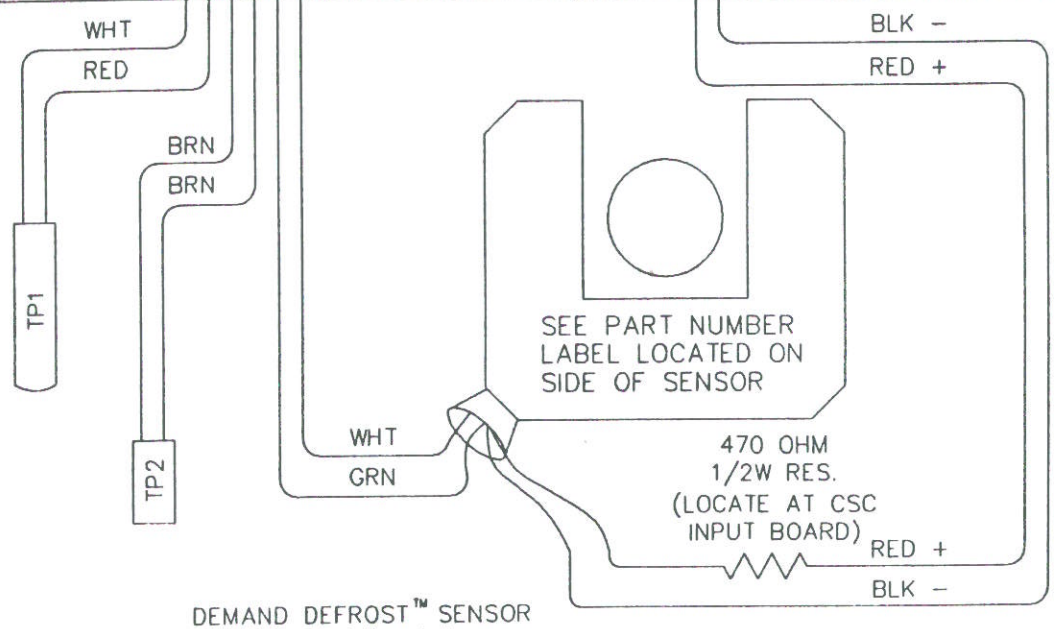

DEMAND DEFROST™ SENSOR

CFDH-4	3/8"-1/2" TUBE
CFDH-5	5/8" TUBE
CFDH-6	3/4" TUBE
CFDH-7	7/8" TUBE
CFDH-8	1" TUBE

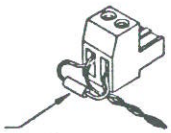

COMMUNICATION TO OTHER CSC'S AND TO RC-2000

120 OHM TERMINATION RESISTOR INSTALLED ON LAST CSC (SEE FIGURE 4) PROVIDED WITH SERIES-2000

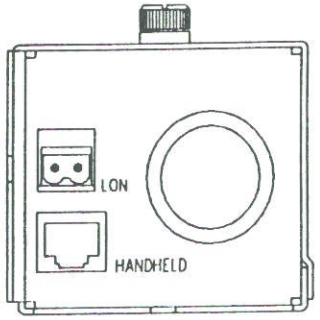

LEFT END CAP VIEW

SHOWN WITH LID INSTALLED

FIGURE 7

CASE SERVICES CONTROL SENSOR INPUT WIRING

EIL INSTRUMENTS, INC.

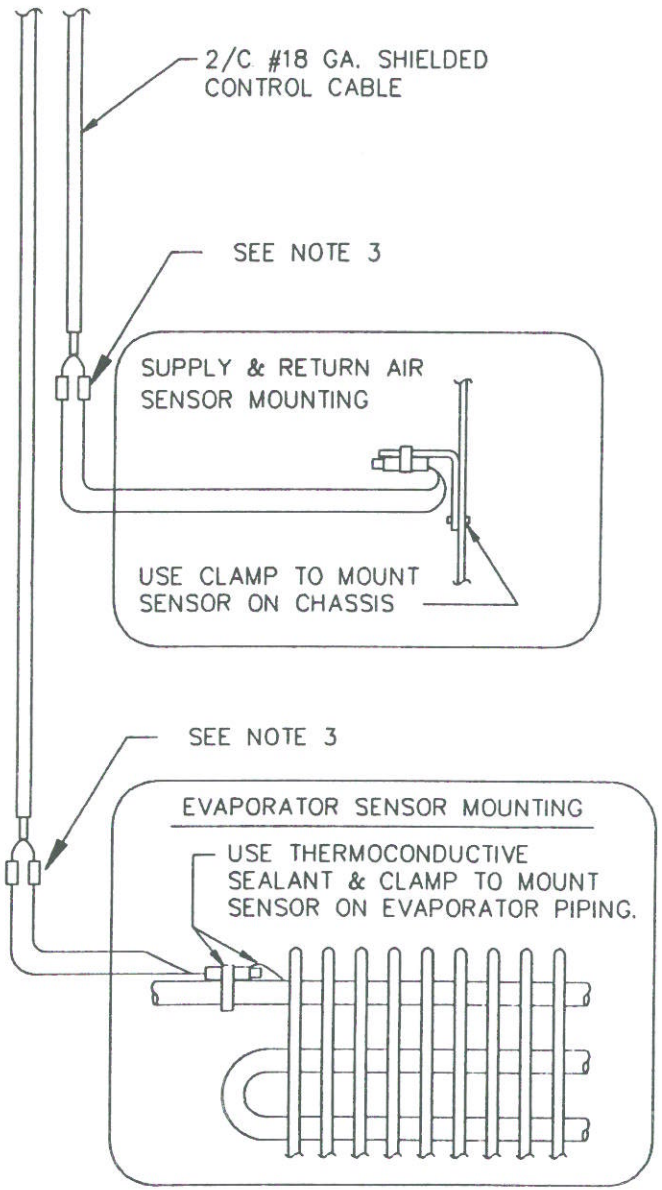

REFRIGERATION CASE

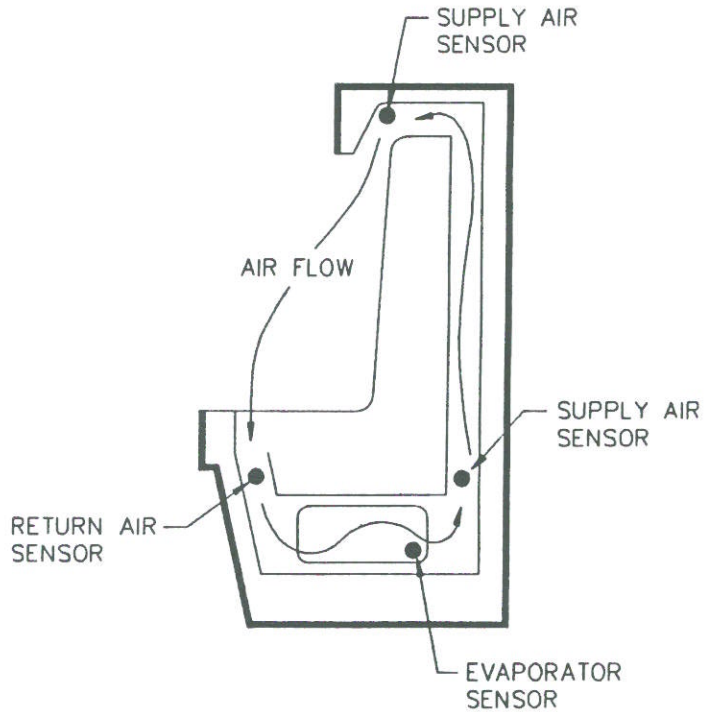

NOTES:

1.) NEVER RUN TEMPERATURE SENSOR WIRING IN THE SAME RACEWAY WITH POWER WIRING.
2.) SENSOR MUST BE LOCATED IN AIRSTREAM.
3.) MAKE CABLE CONNECTIONS OUTSIDE OF THE REFRIGERATED SPACE, SEAL TO PREVENT MOISTURE FROM CORRODING ELECTRICAL CONNECTIONS.

FIGURE 8

CASE SENSOR INSTALLATION

EIL INSTRUMENTS, INC.

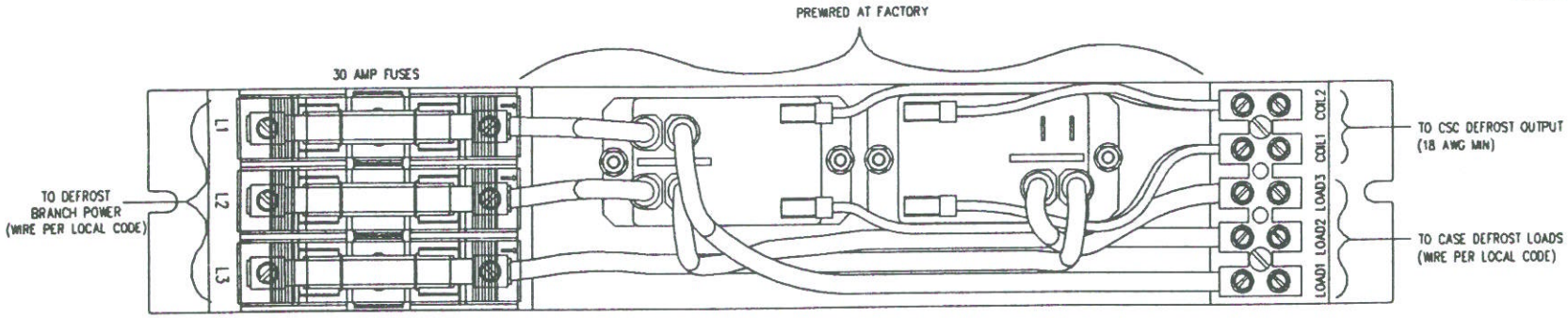

3 PHASE CASE DEFROST CONTROL

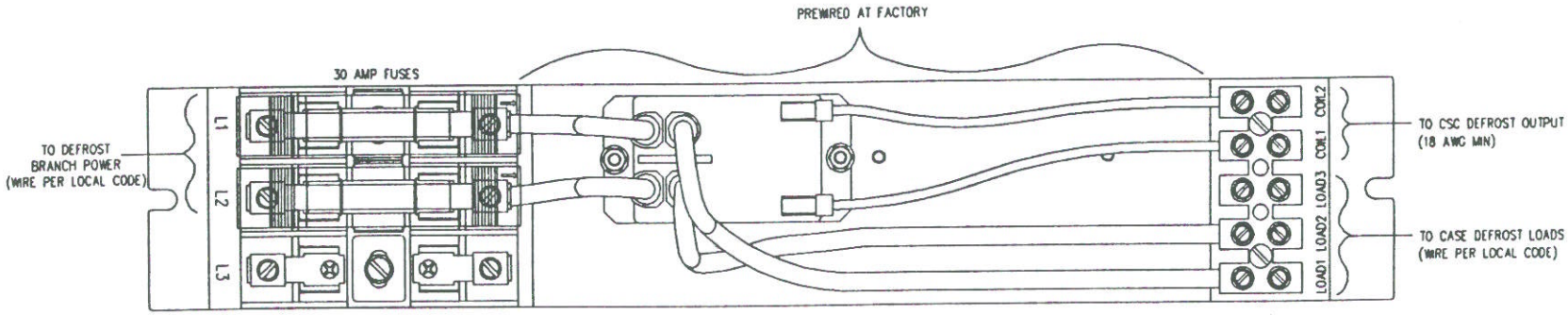

208 SINGLE PHASE CASE DEFROST CONTROL

NOTE:
OPTIONAL ENCLOSURE AVAILABLE FOR CDC.
THE ENCLOSURE MEASURES 18.0L x 2.88W x 3.00H

RELAY RATINGS:
COIL: 120VAC
30A 120/277VAC
20A 28VDC
1 HP 120VAC
2 1/2 HP 240 VAC
TV10 120VAC

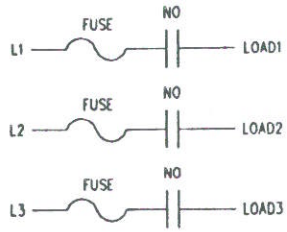

ELECTRICAL DISTRIBUTION OUTPUT

FIGURE 9

CASE DEFROST CONTROL RELAY OUTPUT AND POWER WIRING

EIL INSTRUMENTS, INC.

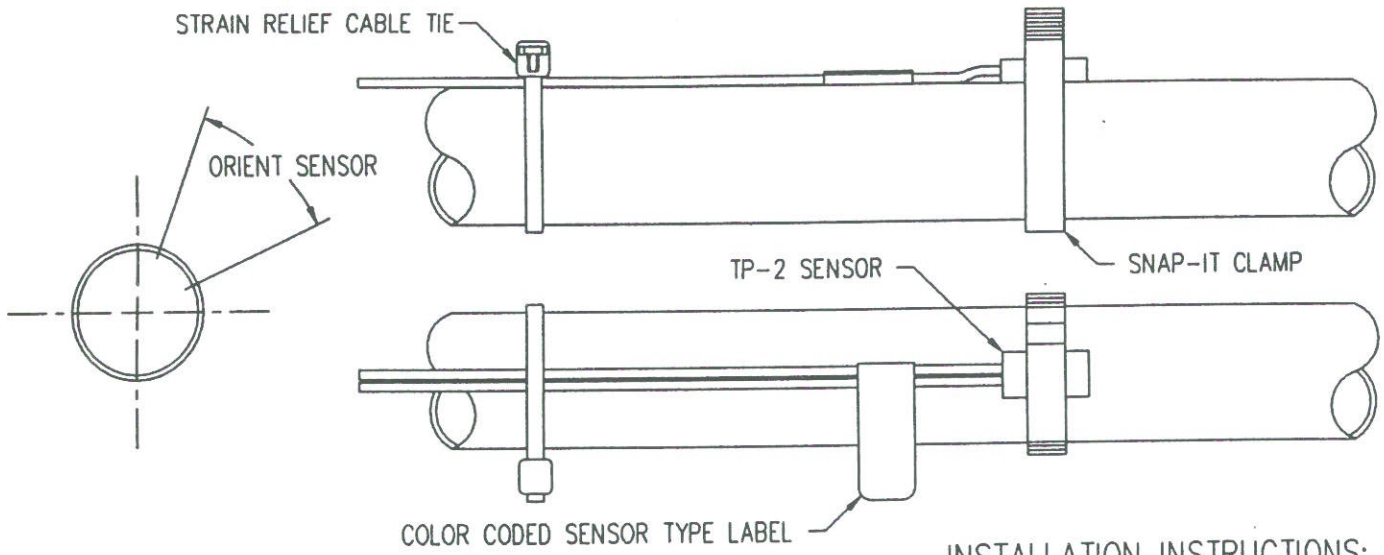

LABEL COLOR CHART

EVAP INLET	BLUE
EVAP OUTLET	RED
DISCHARGE AIR	WHITE
RETURN AIR	GREEN

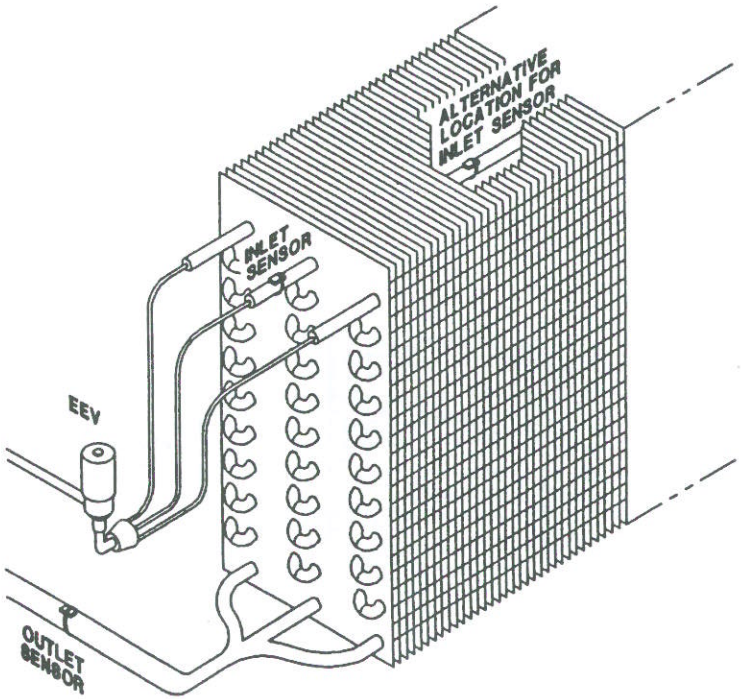

INSTALLATION INSTRUCTIONS:

1. OBTAIN THE TP-2 KIT AND CHECK THE CLAMP TO BE SURE IT IS THE CORRECT SIZE FOR THE PIPE IT WILL BE INSTALLED ON.
2. ATTACH THE APPROPRIATE LABEL (PROVIDED IN SENSOR KIT) NEAR THE LOCATION OF THE SENSOR. (SEE LABEL COLOR CHART)
3. LOCATE AND ORIENT THE SENSOR ON THE PIPE AS SHOWN.
   - A. THE EVAP INLET SENSOR SHOULD BE LOCATED AS CLOSE TO THE LOCATION OF THE FIRST EVAPORATOR INLET FIN <u>OR</u> UP TO 20 INCHES PAST THE LOCATION OF THE FIRST FIN.
   - B. THE EVAP INLET SENSOR SHOULD <u>NOT</u> BE LOCATED ON THE DISTRIBUTOR.
   - C. THE EVAP OUTLET SENSOR SHOULD BE LOCATED IN THE SAME PLACE AS THE TRADITIONAL TXV BULB LOCATION.
   - D. CLEAN LOCATION FOR SENSOR OF OXIDIZATION AND DIRT.
4. USE THE SUPPLIED CLAMP TO SECURE THE SENSOR TO THE PIPE, USE CHANNEL LOCK PLIERS TO TIGHTEN CLAMP. - DO NOT OVER TIGHTEN AS THE CLAMP MAY BREAK. BE SURE THE SENSOR DOES NOT MOVE WHEN WIRE IS TUGGED GENTLY.
5. USE THE CABLE TIE TO SECURE THE TP-2 WIRE APPROXIMATELY 6 INCHES FROM TP-2 SENSOR.
6. INSULATE THE SENSOR AND CLAMP ASSEMBLY USING PERMA-SEAL.
7. ROUTE THE SENSOR WIRE TO THE SENSOR INPUT END OF CSC.
   - A. NEVER RUN SENSOR WIRING NEAR OR IN THE SAME RACEWAY AS POWER WIRING.
   - B. PROTECT WIRING WHEN GOING THROUGH OR AROUND METALWORK WITH SHARP EDGES.
   - C. IF WIRE EXTENSION IS NEEDED, USE 18AWG TWISTED PAIR.
   - D. SPLICE CONNECTIONS ARE TO BE MADE OUTSIDE OF THE REFRIGERATED SPACE. (PREFERABLY USE 3M- SCOTCHLOK SELF-SEALING CRIMPS)
   - E. IF SEALING CRIMPS ARE NOT USED, SEAL SPLICES TO PROTECT FROM MOISTURE AND CORROSION.
8. LABEL THE SENSOR WIRE TERMINATION END USING THE SAME TYPE LABEL AS AT THE SENSOR. (SEE LABEL COLOR CHART)

FIGURE 10

CASE SERVICES CONTROL SENSOR MOUNTING DETAIL