DCU/ECC
(Distributed Control Unit/Electronic Case Control)
Installation and Operations Manual

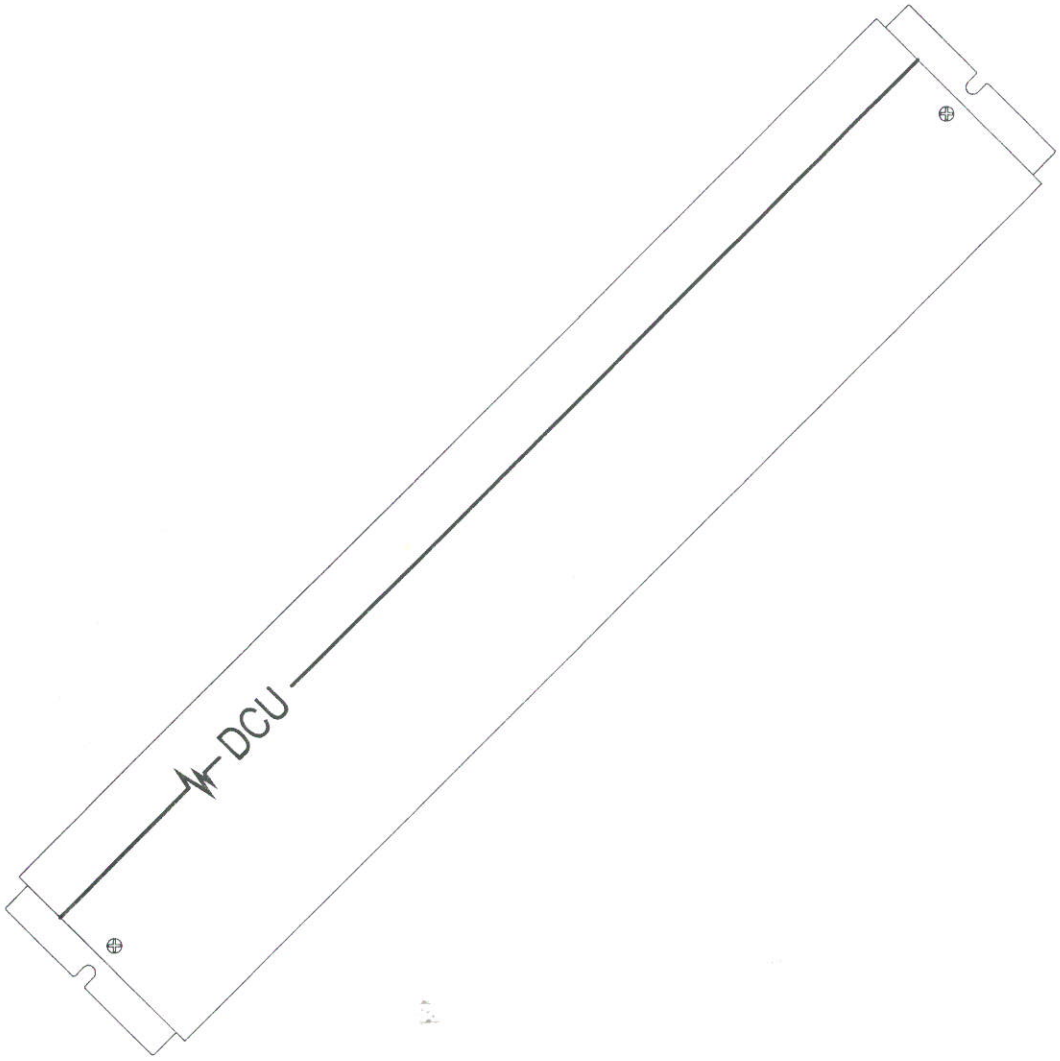

Form No. 4464403200, Rev. A
Date: February 19, 2001
Supersedes: Initial Release, 8/12/96

NOTE

Energy Controls International (ECI), formerly an ECI Group company, has been acquired by Danfoss Inc., a global leader in refrigeration controls, motion controls, and heating & water controls. Within the text of this manual, 'Danfoss/ECI' is used to reference this new partnership.

©2001 Danfoss Inc.
All rights reserved • Subject to change without notice • Printed in the U.S.A.

Table of Contents

Table of Contents i

List of Figures v

List of Tables vii

INTRODUCTION 1
- Refrigeration Case Control 1
- DCU Code and Programming 1
- Case Power Module (CPM) 1
- Line-up Control 1
- Communications 2

DCU HARDWARE OVERVIEW 3
- DCU Main Board 3
- DCU Connections 3
  - Input Connections 3
  - Lon®[1] Connection 3
  - CPM Interconnect 3
  - Valve Specific Removable Daughter Board Connection 3
  - Optional Relay Board 3
  - Power 3
  - Handheld 3
- DCU Micro-Controller 3
- DCU Daughter Boards 4

CASE POWER MODULE (CPM) 5
- CPM Redesign 5
- Introduction 6
- Basic Wiring Scheme 6
- CPM Hardware Specifications 7
- Case Power Module Type and Version Guidelines 7
  - CPM Transformer Options 8
- DCU/CPM Mounting 8
  - Line Power Connections 9
  - Load Connections 9
  - Fuse Protection 10
- CPM to DCU Connection 10
  - Line-up Control Configuration 10

INSTALLATION 11
- Unpacking 11
- DCU/CPM Mounting 11
  - General Considerations 11
  - CPM Considerations 12

1. LON is a U.S. registered trademark of Echelon Corporation.

Walk-In Cooler Mounting Considerations 12

DCU WIRING AND LOAD HOOKUP 13
Echelon®[1] Network 13
Input Sensor Hookup and Placement 13
Analog/Digital Sensor Connections 13
TP-2 Sensor 13
Specifications 13
Sensor Installation Instructions 14
Sensor Replacement 14
Sensor Requirements for Controlling EEV 15
Refrigeration Valve Connections 15
EEPR Valve Connections 15

DCU-ECHELON COMMUNICATIONS 16
Introduction 16
Echelon Networks 16
Network Resistor Termination 16
Echelon Network Specifications 17
Singly Terminated Star Configuration/FTT-10 Network 17
Singly Terminated Network (FTT-10 Networks Only) 18
Doubly Terminated Daisy Chain Configuration/ FTT-10 & TP-78 Networks 19
Network Connections 19
Doubly Terminated Network (FTT-10 or TP-78 Networks) 20
DCU FTT-10 Repeater Board 21

RC-2000/DCU START UP 22
Start Up and ID Procedure 22
Install Node Function 22
Install Code Function 23
Configure Node Function 23
Check Node Function 24
Show Node Version Function 24
Remove Node Function 25
Setpoint RC Æ Node Function 26
Setpoint Node Æ RC Function 26

CASE CONTROL PROGRAMMING AT THE RC-2000 27
Case Control Menu 27
Case Control Master Config Screen 28
Case Control Names Screen 29
Case Control Setup Screen 30
Case Setup Screen Selections 30
Step Rate 32
Stepper Drive Valve Hardware Considerations 32
Case Setup Screen Selections (continued) 32
Case Control Setpoints Screen 35

1. Echelon is a U.S. registered trademark of Echelon Corporation.

Case Setpoints 35
Delays and Durations 36
Time Settings 37
Sensors and Digital Inputs 37
Case Control Status Screen 40
Case State 40
Case Setpoints/ Sensor Readings 41
Case Outputs/ Overrides 42
EEV Valve Operation and Safeties 43
Sequence of Case Controller Valve Operation 43
Override Pull Down Feature 44
Fault Conditions/ Safeties 45
Sensor Fault Condition 45
Phase Loss Safety 45
High Pressure Safety 45
Invalid Suction Temperature (as Defined at the RC-2000) 45

HANDHELD PROGRAMMING 46
Handheld Programming Notes 46
Handheld Special Function Keys 46

HANDHELD PROGRAMMING OPTIONS 47
Main Menu 47
Handheld vs Direct Programming 47

TROUBLESHOOTING 48
Overview 48
Communication Problems 48
Control Problems 48
Valve Problems 48
Handheld Problems 48
RC-2000 Alarms 49
DCU-Echelon Communications 49
Power 50
Software 51
Install Nodes 51
Install Code 51
Check Node 52
ID Tables 52

APPENDIX A: REFERENCE INFORMATION 53
Jumper Configurations For DCU Mother Board 56
RC-2000 Quick Reference Guide 58
DCU Case Status 58
DCU Emergency Defrost 58

APPENDIX B: WARRANTY, REPAIR PROCEDURE AND PARTS LIST 59
Warranty 59
Trademark Information 59
Repair Procedure 59

APPENDIX C
INSTALLATION DIAGRAMS 61
Figure 1: Equipment Size Specification
Figure 2: Equipment Mounting Specification
Figure 3: Typical Block Diagram Energy Management System
Figure 4: Distributed Control Unit Network Connection Overview
Figure 4A: Distributed Control Unit Repeater Connection Diagram
Figure 5: Series 2000 Power and I/O Connection
Figure 6: Distributed Control Unit Output and Power Wiring
Figure 6A: Distibuted Control Unit Output Jumper Setting
Figure 7: Distributed Control Unit Output and Power Wiring
Figure 8: Distributed Control Unit Sensor Input Wiring
Figure 8A: Distributed Control Unit Sensor Input Wiring
Figure 8B: Distributed Control Unit Dual Coil Sensor Input Wiring
Figure 8C: Distributed Control Unit Multi-Coil Sensor Input Wiring
Figure 9: Case Sensor Installation
Figure 10: Distributed Control Unit Sensor Mounting Detail
Figure 11: Case Power Module Load Connections (Old Style CPM)
Figure 12: Case Power Module Load Connections (Old Style CPM)
Figure 13: Case Power Module Load Connections (Old Style CPM)
Figure 14: Case Power Module Load Connections w/3 Phase Defrost (Redesigned CPM)
Figure 15: Case Power Module Load Connections w/3 Phase Defrost (Redesigned CPM)
Figure 16: Case Power Module Load Connections w/Single Phase Defrost (Redesigned CPM)
Figure 17: Case Power Module Load Connections w/External Transformer (Redesigned CPM)

Index

List of Figures

Drawing 1:Sample Danfoss/ECI Control System 2
Drawing 2:DCU Board without Valve Specific Daughter Board 4
Drawing 3:CPM Board 6
Drawing 4:TP-2L Temperature Sensor 13
Drawing 5:Singly Terminated Network (FTT-10 Only) 18
Drawing 6:Doubly Terminated Network (FTT-10 or TP-78) 20
Drawing 7:FTT-10 Network with DCU Repeater Board 21

List of Tables

Table 1:CPM Part Number Guide 5
Table 2:CPM Enclosure Type, Defrost, and Transformer Options 7
Table 3:CPM Voltage Connections for CPM PCB Board # 5120076400-404 9
Table 4:CPM Load Output Fuse Protection 10
Table 5:TP-2L Series Temperature Probe Description 13
Table 6:Echelon Specifications/Singly Terminated Star Configuration Network 17
Table 7:Echelon Specifications/ Doubly Terminated Daisy Chain Network Configuration 19
Table 8:Refrigeration Control Selections 30
Table 9:Auxiliary Refrigeration Control Selections Available for Case Setup 31
Table 10:Step Rate Description 32
Table 11:Aux Relay Control Selections 33
Table 12:Case State Abbreviations and Definitions 40
Table 13:Case Setpoints 41
Table 14:Case Sensor Readings 41
Table 15:Case Control Override Pull Down Occurrences and Duration 44
Table 16:DCU LED Status/ Load On 50
Table 17:CPM Load Voltage Checks 50
Table 18:TP2L Ohms - Volts Conversion for the DCU 53
Table 19:TP-2 Sensor Temp Resistance 57
Table 20:Electronic Case Controls (ECC) Replacement Parts List 60

INTRODUCTION

Danfoss/ECI control systems provide refrigeration and environmental control for commercial buildings. They reduce energy and maintenance costs, and safeguard product and equipment by monitoring control system settings electronically.

The Danfoss/ECI Distributed Control Unit (DCU) is a micro-controller-based unit designed for refrigeration control. Networked with other Danfoss/ECI controls, the DCU becomes part of an integrated control system.

Refrigeration Case Control

The DCU controls sensors, valves and refrigeration at the case level. The following valves may be in place in a DCU-controlled system:

- Refrigeration Solenoid
- Pulse-type Electronic Expansion Valve
- Electronic Evaporator Pressure Regulator (EEPR)

Fully programmable, the DCU accommodates ten universal inputs that accept:

- either Danfoss/ECI TP1 or TP2 temperature sensors
- Low-voltage, dry-contact digital inputs
- 4-20mA sensor inputs

Inputs may be programmed to include:

- Coil-in
- Coil-out
- Discharge air
- Return air
- Alarm sensors
- Digital defrost termination inputs

DCU Code and Programming

The DCU stores application code and setpoint data in non-volatile memory. The application code may be downloaded from the RC-2000, eliminating the need for EEPROM changes at the DCU. Program and interrogate the DCU through a handheld terminal at the case or at the RC-2000 Unit.

IMPORTANT

Although the RC-2000 is not used for basic DCU control operation, it is required for initial store installation of DCUs, DCU data logging, and application program downloading.

Remote setpoint programming of the DCU is also possible from the RC-2000.

Case Power Module (CPM)

The Case Power Module (CPM) is an output control device used with the DCU. It includes a high current relay for electric defrost. The CPM connects to the DCU via an eight wire interconnect cable, which provides power from the CPM to the DCU. The cable also provides the control signals from the DCU to the CPM. The CPM has been designed to fit on top of, or under, cases easily.

The CPM has two main functions:

1. It supplies power to the DCU motherboard.

NOTE

Danfoss/ECI offers a version of the DCU that contains a transformer, making it a complete stand-alone controller.

2. It controls fans, lights, anti-sweat heaters, and electric defrost loads.

Line-up Control

Danfoss/ECI's electronic case control components (the DCU and CPM) also work together in line-up control, enabling one DCU to control multiple cases. For line-up control, daisy chain multiple CPMs together with one DCU and combine them with either a suction or liquid solenoid at the case. For more information about line up control with the CPM, see "Line-up Control Configuration" on page 10.

Communications

Communications for the integrated control system are based on the Echelon® LONWORKS™ network, which allows flexible communication wiring. Up to fifty-nine DCUs may be connected to one RC-2000.

NOTE

The RC-2000 communicates suction temperature and dew point temperature to associated DCU controllers.

Drawing 1 illustrates the components of a typical Danfoss/ECI Energy Control System. Note the DCU's position in the network.

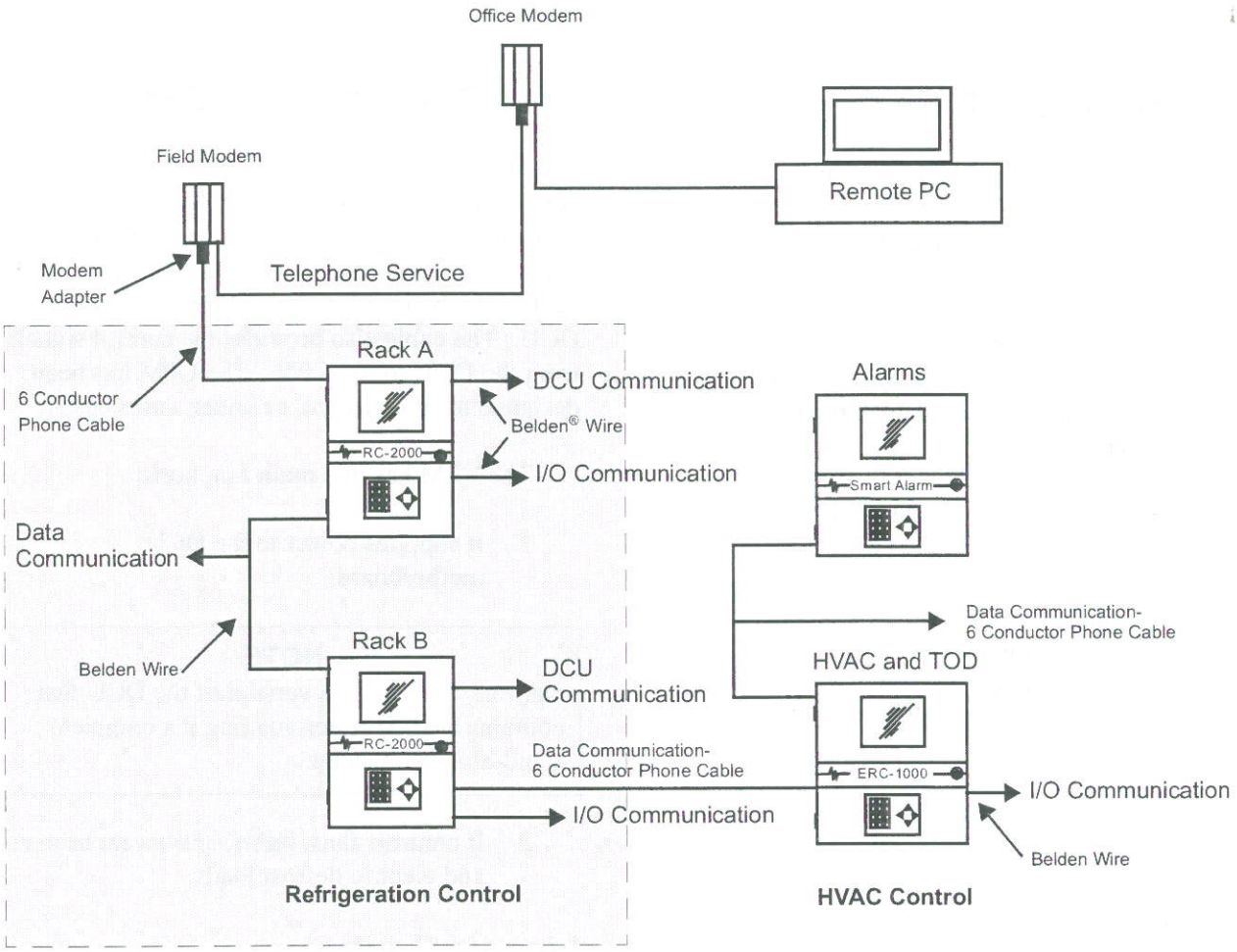

Drawing 1: Sample Danfoss/ECI Control System

Echelon is a U.S. registered trademark of Echelon Corporation.
LONWORKS is a trademark of Echelon Corporation.
Belden is a US. registered trademark of Belden Inc.

DCU HARDWARE OVERVIEW

The DCU consists of one main circuit board within a metal enclosure. All sensor inputs, communications, and valve connections occur inside the DCU.

Remove the enclosure to access the DCU board and circuitry via a lid that is fastened with two screws.

DCU Main Board

The DCU's main board is divided into two sides:

1. A low voltage input and communications side
2. A valve output and interconnect side.

All temperature and low voltage digital inputs are connected to the board via the terminal strip. The main board includes relay output drivers to activate relays on the separate CPM output board and RS485 communication circuits for interface to the handheld unit. Two red LEDs blink to indicate when +12VDC and +5VDC power is operational.

> **NOTE**
> Figures 8, 8A, 8B and 8C in Appendix C illustrate the low voltage input connections.

DCU Connections

Multiple DCUs can be networked together to form an integrated control system. Different DCU connection points follow.

Input Connections

All temperature and low voltage digital inputs are connected to the board via the terminal strip. Figures 8, 8A, 8B, and 8C in Appendix C illustrate specific sensor input wiring schemes.

LON® Connection

The LON connector is located on the "neck" of the board. It serves as the LON interface that connects to other DCU units and to the RC-2000. It is labeled P1 on the DCU.

CPM Interconnect

A connector on the right side of the DCU main board receives the CPM interconnect cable.

Valve Specific Removable Daughter Board Connection

The DCU houses a connector for the valve specific removable daughter board.

Optional Relay Board

The right side of the main DCU board houses a connector for an optional relay board.

Power

If a built-in transformer is present, it is prewired to the appropriate connector on the main board.

> **NOTE**
> Units that are powered by the CPM receive a 24VAC low voltage supply through the CPM interconnect cable.

Handheld

The board has a modular RJ-11 type plug on the left side for connection of the handheld terminal for local interrogation and programming of the DCU.

DCU Micro-Controller

The main board contains the Echelon 3150® CPU micro-controller. The micro-controller includes non-volatile setpoint storage and 16 Kbytes of EEPROM, which stores the application program for DCU operation.

LON and 3150 are U.S. registered trademarks of Echelon Corporation.

DCU Daughter Boards

The daughter board placed on the DCU controls the refrigeration valve(s).

- Board type CC/20045404 controls one EEV.
- Board type CC/20045403 controls two EEV valves.

NOTE

EEV valves can be used with 120-24VAC or VDC.

- Board type CC/2004501 controls one Alco or Sporlan EEPR valve.

NOTE

External AC voltage must be brought to the EEV daughter board.

Connect Danfoss 120VDC valves to the plus (+) and minus (-) terminals.

Connect Danfoss 24VAC valves to the (H) and (N) terminals.

Connect ALCO 24/120VAC valves to the (H) and (N) terminals.

Refer to Figures 6 and 7 in Appendix C for daughter board configurations.

If the valve has a 120VAC and VDC coil, then 120VAC must be brought to the daughter board.

NOTE

A DCU may be powered by a CPM or a 24VAC transformer.

IMPORTANT

DCUs powered by 24VAC transformers may be prewired at the factory with the correct voltages. Contact Danfoss/ECI manufacturing for more information about factory set models.

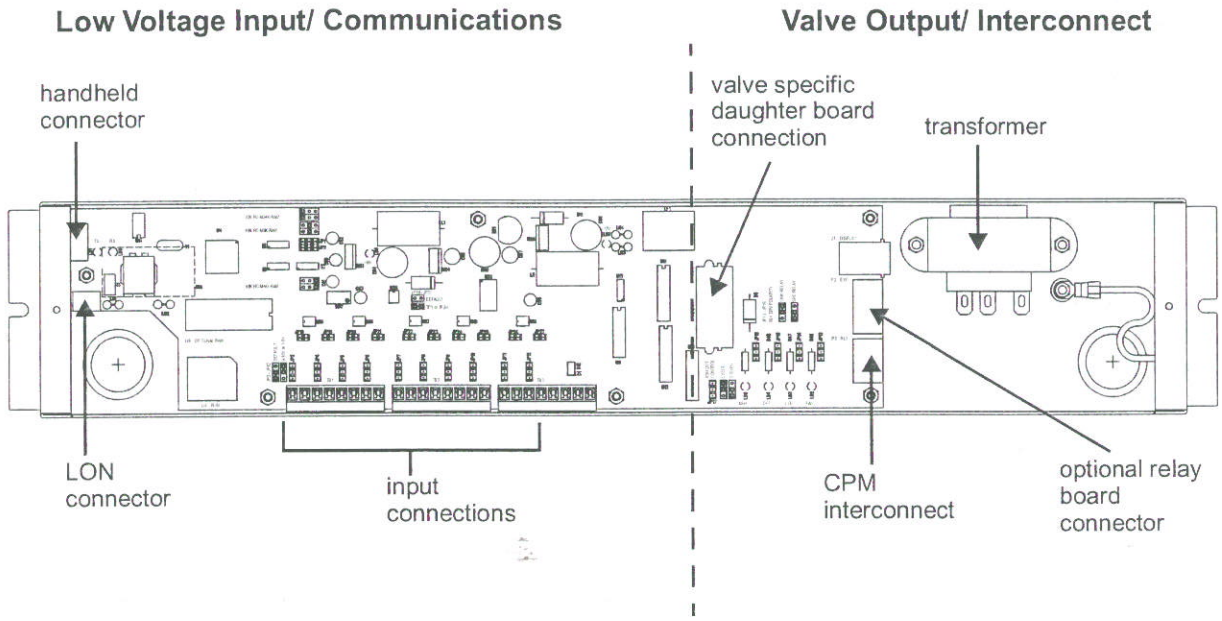

Drawing 2: DCU Board without Valve Specific Daughter Board

CASE POWER MODULE (CPM)

CPM Redesign

Please note that if you purchased a CPM unit prior to July, 1998, you have a different style unit than the one referenced in the pages that follow in this manual. The CPM was redesigned in 1998, including changes in wire coloration, basic wiring scheme, and transformer options. If you are uncertain which model of CPM you have, check the part number on the product label and reference Table 1 below. **If you determine that you have an older style CPM, reference Figures 11, 12, and 13 in Appendix C for wiring layout**. Figures 14 through 17 in Appendix C apply to the redesigned CPM.

Table 1: CPM Part Number Guide

Part Number	Product Description
Older Style CPM (Prior to Redesign)	
CC/20046400	CPM
CC/20046401	CPM with Defrost Relay
CC/20063400	CPM in Enclosure
CC/20063401	CPM with Defrost Relay in Enclosure
Newer Redesigned CPM	
CC/20046410	CPM Plate Version, no Defrost, no Transformer
CC/20046411	CPM Plate Version, no Defrost, 10VA Transformer
CC/20046412	CPM Plate Version, no Defrost, 40VA Transformer
CC/20046420	CPM Plate Version, with Defrost and ASH, no Transformer
CC/20046421	CPM Plate Version, with Defrost and ASH, 10VA Transformer
CC/20046422	CPM Plate Version, with Defrost and ASH, 40VA Transformer
CC/20063410	CPM Enclosure Version, no Defrost, no Transformer
CC/20063411	CPM Enclosure Version, no Defrost, 10VA Transformer
CC/20063412	CPM Enclosure Version, no Defrost, 40VA Transformer
CC/20063420	CPM Enclosure Version, with Defrost and ASH, no Transformer
CC/20063421	CPM Enclosure Version, with Defrost and ASH, 10VA Transformer
CC/20063422	CPM Enclosure Version, with Defrost and ASH, 40VA Transformer
CC/20063440	CPM Enclosure Version, 3 Phase, Fused, no Transformer
CC/20063441	CPM Enclosure Version, 3 Phase, Fused, 10VA Transformer
CC/20063442	CPM Enclosure Version, 3 Phase, Fused, 40VA Transformer

Introduction

The Case Power Module (CPM) is a component of Danfoss/ECI's Electronic Case Controls (ECCs). The CPM has two main functions:

1. It supplies power to the DCU motherboard.

2. It controls fans, lights, anti-sweat heaters, and electric defrost loads.

The Case Power Module (CPM) customizes electronic case control operations by adding the following features:

- The option of line-up control
- Larger transformer that supports additional valves
- Factory-selectable voltage input (115V or 230V)
- LED indicators that show DCU output

Basic Wiring Scheme

The CPM main board contains all of the high voltage connections to and from the DCU. CPM load output connections are made directly to the terminal strip at the right side of the module. All outputs have corresponding LED indicators toward the center of the CPM board.

Power input connections are made from the left side of the module via color-coded wires.

NOTE

See "Line Power Connections" on page 9 and Table 3 for installation information about the wiring scheme and colors.

Drawing 3 below displays the CPM.

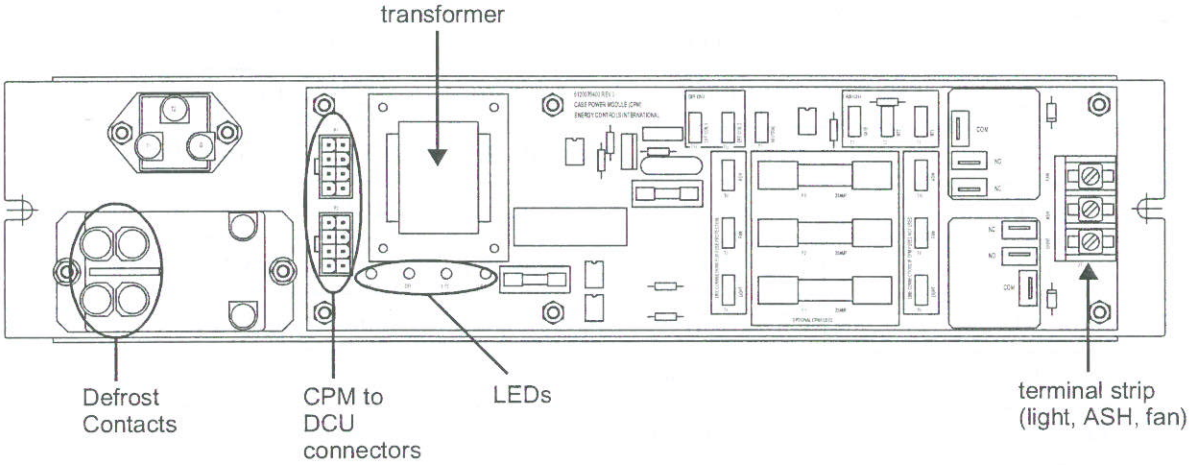

Drawing 3: CPM Board

CPM Hardware Specifications

Dimensions:
Plate Version: 13.25"L × 3.0"W × 2.60"H
Standard Version: 19.5"L × 3.4"W × 2.95"H
Stretch Version: 25.5"L × 3.4"W × 2.95"H

Operating Environment:
Ambient Limits: 32°F to 110°F
Relative Humidity: 0 to 95% noncondensing

Power Requirements:
120/240VAC @ 1A

Case Power Module Type and Version Guidelines

The CPM sends power to the DCU through a low-voltage cable and provides load-rated control of case fans, lights, and anti-sweat heaters. The type and version of the CPM varies, based on the type of case and the mounting style of the unit. Table 2 outlines these options.

Table 2: CPM Enclosure Type, Defrost, and Transformer Options

ENCLOSURE TYPE	
VERSION	**MOUNTING LOCATION**
Plate	Raceway Mounting
Box (Standard and Stretch)	On top of or underneath case
DEFROST OPTIONS	
VERSION	**APPLICATION**
No Defrost	Medium Temperature Case/Off-time Defrost
1 phase & 3 phase with defrost (no fusing), anti-sweat heater (ASH)	Low temperature cases or medium temperature cases with defrost
1 phase fused, with defrost and ASH	Low temperature cases or medium temperature with defrost
3 phase fused, with defrost & ASH	Low temperature cases or medium temperature with defrost
NOTE: All defrost versions have anti-sweat relays included. ASH = Anti-sweat heater	
TRANSFORMER OPTIONS	
VERSION	**VALVE/APPLICATION**
No transformer	Line-up control
10VA "On Board"	115V EEV and EEPR & Stepper EEV
40VA "Off Board"	24V EEV (single valve)
40VA "External"	Line Up Control
80VA "External"	Dual Valve 24EEV

CPM Transformer Options

NOTE
The transformer correlates directly to the valve control and mounting options.

The CPM supports three transformers:

1. **10VA:** mounted "On Board" the CPM.

2. **40VA:** mounted "Off Board" the CPM or "External" from the CPMs.

3. **80VA**: mounted "External" of the CPM.

Mounting options are described below:

1. ***On board:*** mounting of the transformer on the PC Board.
2. ***Off board:*** mounting of the transformer in the enclosure, but not on the PC board.
3. ***External:*** mounting of the transformer outside the CPM enclosure.

The 10VA transformer supports:
- 115V EEV and EEPR and stepper EEV valves.

The 40VA transformer supports:
- single 24V EEV valves and line-up control.

The 80VA transformer supports:
- dual 24V EEV valves.

IMPORTANT
For line-up control, the 40VA transformer must be installed at the CPM closest to the DCU.

DCU/CPM Mounting

Danfoss/ECI recommends raceway or top mounting the DCU and CPM on a case. Consider accessibility for servicing and wiring the unit.

Suggestion
Allow at least six inches at both ends of the DCU for handheld connectors and communication connections.

For optimal performance of your unit, Danfoss/ECI recommends choosing an area that is free of water and excessive dirt and debris. If mounting the units under the case, make sure that they do not interfere with the case drains.

The DCU and CPM may be separated. For example, if the DCU is mounted on top of the case, the CPM may be placed in the raceway to avoid pulling high current defrost wires to the top of the case. The interconnect cable must be long enough to accommodate this distance.

With walk-in coolers, the DCU and CPM can be placed on top of, or on the side of, the cooler.

IMPORTANT
Do not stack debris or product on or near the units.

Do not mount the units in the refrigerated space of a walk-in cooler.

SUGGESTION
Danfoss/ECI recommends marking the outside of the access panel if the DCU or CPM is mounted in a box or wire raceway. This displays that the unit is behind it.

If the units are located close to the floor, be sure that there is enough clearance underneath, so that water and cleaning agents do not enter the cabinets.

Refer to Figures 1 and 2 in Appendix C of this manual for dimensions, mounting hole locations and knockout locations for the DCU and CPM.

Line Power Connections

Line power connections are made via the wires on the CPM. The input wires on the CPM run to the left of the module. They are color-coded per connection (see Table 3 below).

Be sure to reference the table below before installation.

Table 3: CPM Voltage Connections for CPM PCB Board # 5120076400-404

WIRE COLOR	CONNECTION
Brown Wire	Line connection for fan
White Wire	Neutral connection
Green Wire	Ground
Blue Wire	Line connection for lighting load
Orange Wire	Line connection for the ASH (anti-sweat heater) load

The wire size for the input must be made per local code requirements and must be able to handle all output load currents.

NOTE

Although 208V may be powering the DCU, the loads are powered as 120V.

The basic CPM/DCU requires 1A @ 120V for idle operation.

Load Connections

Defrost load connections are made at the color-coded pigtails on the left of the module. A terminal strip is provided for fans, ASH, and lights.

IMPORTANT

Make sure that wire sizes are based on the local code requirements for the load current in use.

The relay outputs for the fan and the lights are fused at 20A. A solid state device is used for the anti-sweat output, fused at 20A. The lights and ASH outputs connect to the N/O contacts of their respective relays on the CPM terminal strip. The fan connects to the N/C fan contact on the terminal strip. These three relay contacts on the terminal strip are labeled (LIGHT, FAN, ASH).

The CPM uses a high current relay for switching defrost loads. It can be configured to break one or two phases.

IMPORTANT

For three phase operation, Danfoss/ECI recommends using the following CPM models:

- 20063440, Box Stretch, No Transformer
- 20063441, Box Stretch, 10VA Transformer
- 20063442, Box Stretch, 40VA Transformer

The models listed above incorporate two defrost relays, preventing service personnel from accessing a "hot" phase of a delta wired defrost load that is functionally off.

When using the second defrost relay, the defrost signal from the CPM defrost relay coil must be wired to the second relay's coil terminals using 14 gauge wire. The load wires should follow local code requirements for load currents.

Refer to Figure 13 in Appendix C.

Fuse Protection

CPM load outputs are fuse protected according to the following guidelines:

Table 4: CPM Load Output Fuse Protection

Load	Supplementary Fuse Protection	Maximum Continuous Load Rating
Light	F1: Lighting Load; fused @ 20A, 250V	13A @ 120VAC
Fan	F2: Fan Load; Fused @ 20A, 250V	1 hp (12A) @ 120VAC
ASH	F3: ASH Load; fused @ 20A, 250V	14A @ 120VAC
Defrost	Defrost Output; not fused	24A @ 208VAC
NOTE: The fan circuit is switched via the N/C relay contact. The ASH circuit is switched via the N/O solid state relay.		

CPM to DCU Connection

Power (24VAC) to the DCU is provided by the CPM through an 8 pin interconnect cable. The CPM to DCU connection is made with a four, fifteen, or twenty foot interconnect cable at the eight point Molex connector labeled P1 or P2, at the left side of the CPM.

NOTE

These connections are interchangeable.

Line-up Control Configuration

Line-up control, the control of up to four cases with one DCU and a maximum of four CPMs, can be done with Danfoss/ECI case control equipment. For line-up control, connect each CPM together with eight point Molex cables. Use the connector labeled P2 on the CPM board.

IMPORTANT

For line-up control with the CPM, ensure that the following conditions are met:

1. A 40VA external transformer is installed at the CPM closest to the DCU.
2. No transformers are installed on the other CPMs in the configuration.
3. Eight point Molex cables are used to connect the CPMs together.
   ***NOTE*:** Be sure to order the correct cable length!

Use the second connector (P2) to daisy chain multiple CPMs together.

INSTALLATION

Unpacking

Remove the DCUs and/or CPMs from their shipping container and check for physical damage.

You should receive:

- Requested order of DCUs
- Requested order of CPMs
- Handheld (if ordered)
- Installation kit (contains a push button install tool and this manual)

Notify Danfoss/ECI's Sales Department immediately if you have any damaged or missing parts at 410-403-4000 between the hours of 8:30 A.M. and 4:30 P.M. (See Note on page 59)

DCU/CPM Mounting

General Considerations

For optimal performance, Danfoss/ECI recommends raceway or top mounting the DCU and CPM. Consider the following when installing your unit(s):

1. Case accessibility for both servicing and wiring the unit.

NOTE

Allow at least six inches at both ends of the DCU so that the connectors on the side of the unit for the handheld and communication connections are easily accessible.

2. Freedom from water, dirt and debris.

IMPORTANT

If mounting the units under the case, make sure that they do not interfere with the case drains.

NOTE

The DCU and CPM may be separated. For example, if the DCU is mounted on top of the case, the CPM may be placed in the raceway to avoid pulling high current defrost wires to the top of the case. The interconnect cable must be long enough to accomodate this distance.

3. DCU cover removal (if necessary) by loosening the screw on each end.

NOTE

Danfoss/ECI recommends raceway or top mounting the DCU. Mounting slots are found in the tabs attached to the end caps of the unit.

4. Mounting hole predrilling to prevent metal flakes from contacting the electronic components within the unit.

5. Permanent mounting (via screw or bolt) of the DCU to the mounting location.

6. Cover use to avoid damage to the electronic components in the unit.

CPM Considerations

For optimal unit performance, follow the instructions below when installing a CPM with your DCU:

1. Pre-drill all mounting holes to prevent metal flakes from contacting the electronic components within the unit.

2. Screw or bolt the CPM to the mounting location.

NOTE

The CPM may be ordered with or without an enclosure.

If the CPM has been ordered in an enclosure, remove the CPM cover. Locate and mark the mounting holes on the enclosure.

If the CPM has not been ordered with an enclosure, it has mounting slots on the ends of the mounting plate.

Walk-In Cooler Mounting Considerations

The DCU and CPM can be placed on top of, or on the side of, a cooler. If the units are located close to the floor, be sure that there is enough clearance underneath so that water and cleaning agents do not enter the cabinets.

IMPORTANT

Do not mount the units in the refrigerated space of a walk-in cooler.

Do not stack debris or product on or near the units.

SUGGESTION

If the DCU or CPM is mounted in a box or wire raceway, mark the outside of the access panel to indicate that the unit is behind it.

Refer to Figures 1 and 2 in Appendix C for DCU and CPM dimensions, mounting hole locations, and knockout locations.

DCU WIRING AND LOAD HOOKUP

Echelon Network

The network or LON communication connection for the DCU consists of a two wire twisted pair that is daisy chained between the DCUs. **See Figure 4** in Appendix C. The connector on the DCU main board marked LON is the termination point for this connection.

Input Sensor Hookup and Placement

Bring the sensor inputs in from the left side of the DCU and connect them to the input terminal strips. All sensors should be wired using the original sensor wires or 18 gauge shielded twisted pairs, if splicing is necessary.

Analog/Digital Sensor Connections

An analog or digital sensor can be connected to any of the ten A/D terminals.

IMPORTANT

Sensors with 4-20mA outputs must be connected to the 4-20mA input number eleven.

TP-2 Sensor

The TP-2 sensor is primarily used on the Distributed Control Unit (DCU) for case control applications. The sensors are differentiated by wire color (see Table 5 below). The TP-2 sensor is shown below:

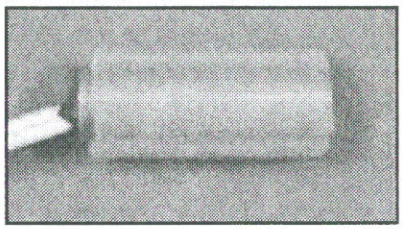

Drawing 4: TP-2L Temperature Sensor

Specifications

Temperature Range

TP-2L
(DCU Interface) ..... (-40°F) to (+97°F)
Accuracy ..... (+/-) 1°F

Dimensions

Length ..... 1.04"
Width ..... 0.30"
Height ..... 0.30"

Wiring

Polarity Sensitive ..... no
Color Coded ..... per Application*

*Color Coding adheres to CRMA standards

Table 5: TP-2L Series Temperature Probe Description

Part Number	Wire Color	Application	Wire Length
27001000	Blue	Coil Inlet	20 ft.
27001100	Red	Coil Outlet	20 ft.
27001200	Orange	Defrost Termination	20 ft.
27001300	Purple	Return Air	20 ft.
27001400	Green	Discharge Air	20 ft.
27001500	White	Other Applications	20 ft.
CC/TP-2LU5	White	Upgrade or Replacement	3 ft.

Sensor Installation Instructions

Follow the steps below to install analog/digital sensors.

1. Make sure that the probe has the proper color wire for the application in which the probe is being used (see Table 5).
2. Locate and orient the sensor on the pipe as shown in Figure 10 of Appendix C.
   a. The coil inlet sensor should be located at least 20 inches past the location of the first fin or at the first pass on the far end. (NOTE: Consult the case manufacturer for the best sensing location).
   b. The coil inlet sensor should not be located on the distributor.
   c. The coil outlet sensor should be located in the same place as the traditional TXV bulb location.
   d. Clean sensor location for oxidation and dirt.
3. Use the supplied wire/tie to secure the sensor to the pipe, use channel lock pliers to tighten wire/tie. Do not overtighten as the wire/tie may break. Be sure that the wire/tie and sensor do not move when the sensor wire is pulled and the wire/tie is turned.
4. Use another cable tie to secure the TP-2 wire approximately 6 inches from the TP-2 sensor to relieve strain.
5. Insulate the sensor and clamp/tie assembly using perma-seal.
6. Route the sensor wires to the sensor input end of the DCU.
   a. Never run sensor wiring near or in the same raceway as power wiring.
   b. Protect wiring when going through or around metalwork with sharp edges.
   c. If wire extension is needed, use 18 awg twisted pair.
   d. Splice connections are to be made outside of the refrigerated space (preferably use 3M Scotchlok U1B self-sealing crimps).
   e. If sealing crimps are not used, solder and heat-shrink to protect from moisture and corrosion.

Sensor Replacement

Follow the instructions below to replace a sensor.

1. Clip the old sensor wires.
2. Use 3M Scotchlok U1B connectors to splice the new sensor leads to the existing wire run. To do this, insert the leads from the sensor into the connector (do not strip the wire). Insert the leads from the existing run of wire into the connector. Use pliers to squeeze down the blue top of the connector. U1B connectors contain a silicon compound to make the splice moisture resistant.
3. Remove the old sensor.
4. Mount the new sensor.
5. Check the temperature reading at the unit.

Sensor Requirements for Controlling EEV

Use of an EEV valve requires up to four sensors, as needed. They include:

- Discharge air
- Return air (optional)
- Evaporator in
- Evaporator out

The discharge and return sensors are located as shown in Figure 9 of Appendix C.

Refrigeration Valve Connections

The refrigeration valve connections are made on the daughter board. For the EEV and solenoid valves, external power must be supplied to the daughter board. Power requirements are 120VAC for the 120VAC/VDC valves and 24VAC for the 24VAC/VDC valves. External voltage connects to the board on the terminals marked AC1 and AC2. The circuitry on the daughter board switches the power to the valve. The daughter board has a bridge rectifier to convert the AC power to DC.

Connections for the AC valves are on the terminal strip next to the ACH and ACN terminals. Refer to Figure 7 for the EEV connections.

EEPR Valve Connections

For the EEPR valve, connections should be made to the daughter board per Figure 6. The Alco and Sporlan valves have a four-position plug that directly mates with the connector on the daughter board. The four position terminal strip on the daughter board is identical to the plug connections. This can be used to connect the Alco valve or to connect the Sporlan valve if the connector is missing.

NOTE

There is one jumper on the EEPR daughter board. It is labeled J1.

- J1 should be off if used with the Alco valve.
- J1 needs to be installed if used with the Sporlan EEPR valve.

DCU-ECHELON COMMUNICATIONS

Introduction

Danfoss/ECI uses the Echelon FTT-10 Network for the DCU product line of case controllers, offering more flexibility than the Echelon TP-78 (CSC) Network. The Echelon FTT-10 Network has multiple configuration options, whereas the Echelon TP-78 Network is limited to one daisy chain type network throughout the store. In addition to flexibility, the FTT-10 Network lowers installation expenses.

IMPORTANT

To ensure the integrity of the Echelon communication network, the Echelon Networks have specifications that must be followed. They are discussed in the sections that follow.

Echelon Networks

Echelon specifies cable type and distance limits for its existing networks. This section specifies cable type and distance limits for two Echelon-supported network configurations: the FTT-10 star configuration and the FTT-10 doubly terminated daisy chain configuration. Danfoss/ECI recommends the FTT-10 star network, as it offers more configuration flexibility. Note, however, that whichever network you choose requires cable type and distance compliance with the Echelon-specified guidelines.

IMPORTANT

To ensure network reliability, you need to comply with cable type and distance limits. Danfoss/ECI strongly advises that installation drawings reflect the network layout and that installation contractors adhere to them.

SUGGESTION

A copy of the installation drawing(s) should be displayed onsite; this assists with network troubleshooting.

Network Resistor Termination

The network requires that a termination resistor be installed within the network loop. The value and location of the resistor depends on the loop configuration.

Echelon Network Specifications

Singly Terminated Star Configuration/ FTT-10 Network

The singly terminated FTT-10 star configuration (optional) branches out in different directions. Each of these branches is wired in a daisy chain configuration, in succession from one case to another.

IMPORTANT

Danfoss/ECI specifies a maximum of four branches from one network hub.

NOTE

Limited exceptions to this general recommendation may be made if the existing conduit does not support this daisy chain configuration. Contact Danfoss/ECI Engineering for details.

The star configuration requires the hub of the star to be located within ten feet of the RC-2000 or network management device. This requirement ensures easy isolation of the individual star lengths, rendering it easier to diagnose network problems with an ohmmeter or a LAN test meter (TDR). Table 6 below lists the star network specifications.

IMPORTANT

Be sure to document the configuration layout PRIOR to installation. This provides an installation guide and network configuration reference document.

SUGGESTION

Post the layout configuration document within the store for maintenance personnel.

Table 6: Echelon Specifications/Singly Terminated Star Configuration Network

CABLE TYPE	MAXIMUM TOTAL WIRE LENGTH	MAXIMUM NODE TO NODE DISTANCE*
Belden #8471, 16 awg.	1600 feet (500 meters)	1300 feet (400 meters)
Belden #85102	1600 feet (500 meters)	1300 feet (400 meters)
*A Danfoss/ECI-DCU Repeater Board (Part #20055400) may be used to strengthen and extend the network signal capability.		

Singly Terminated Network (FTT-10 Networks Only)

A singly terminated network (star type configuration) requires that one (1) 51ohm ¼ watt resistor connect across the communication lines. This resistor should be at a central location (i.e., at the RC-2000 or the hub of the communications). Drawing 5 below illustrates this type of network termination.

NOTE

All Echelon-capable RC-2000 products with installed MIP Daughter Boards are delivered with one (1) 51 ohm ¼ watt resistor in place across the LON connector.

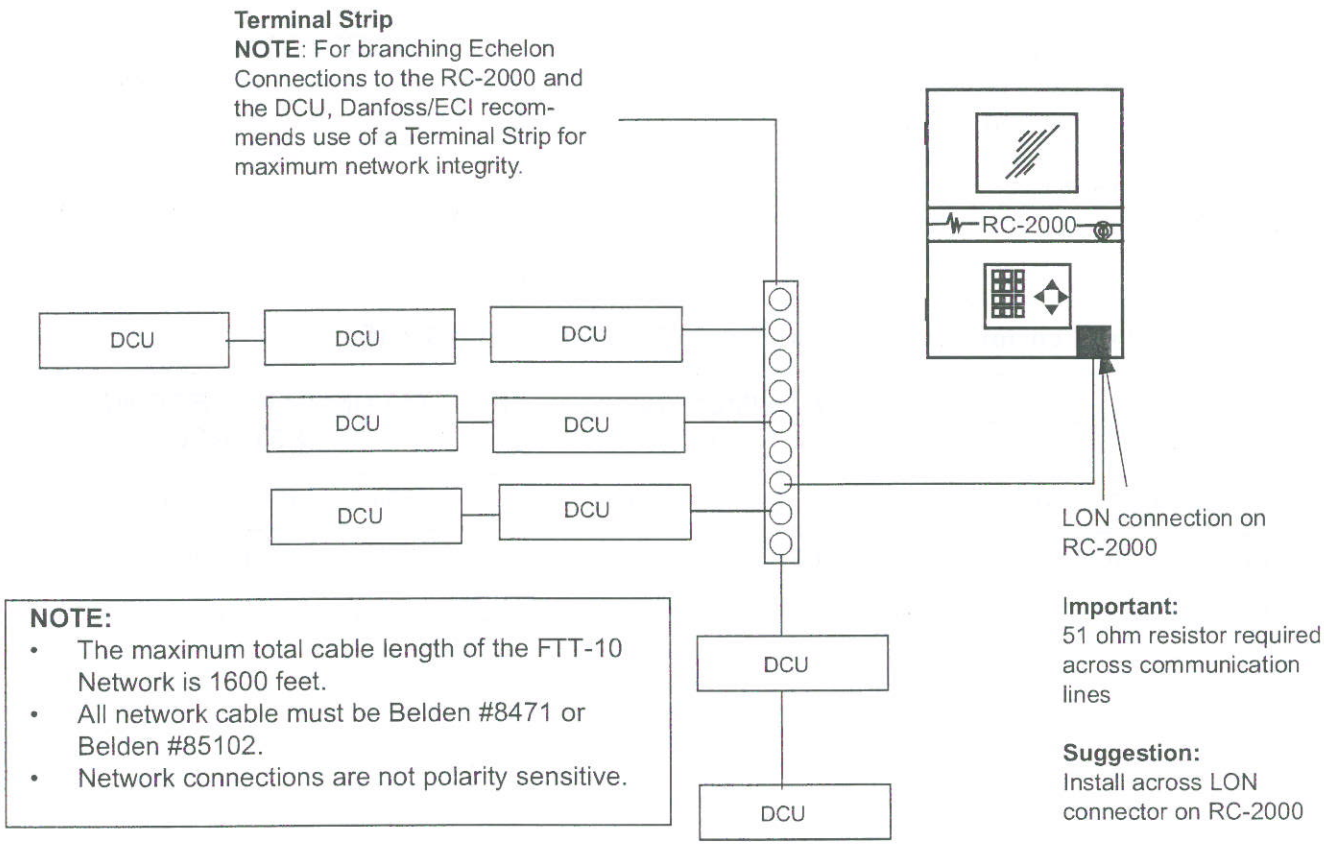

Drawing 5: Singly Terminated Network (FTT-10 Only)

Doubly Terminated Daisy Chain Configuration/ FTT-10 & TP-78 Networks

The Doubly Terminated Daisy Chain Networks restrict installation to a single branch daisy chain configuration. Within this network, the RC-2000 has two location options: at either end of the daisy chain, or in the middle of the daisy chain.

This network configuration provides greater distance capability. The signal strength is greater because of the limited signal reflection in a single branch daisy chain configuration.

NOTE

This type of network allows for convenient isolation of the network segments.

The network routing should always be documented and posted within the store for maintenance personnel.

Table 7 below lists the Echelon specifications for the doubly terminated daisy chain network configuration. Be sure to adhere to these guidelines when installing this network.

Table 7: Echelon Specifications/ Doubly Terminated Daisy Chain Network Configuration

CABLE TYPE	MAXIMUM TOTAL WIRE LENGTH	MAXIMUM NODE TO NODE DISTANCE
Belden #8471, 16 awg.	8800 feet (2700 meters)	2200 feet (400 meters)
Belden #85102	8800 feet (2700 meters)	1600 feet (500 meters)

Network Connections

A reliably performing network depends on the correct physical connection of the network cable. This section highlights the network connections.

Location connections on the RC-2000 and the DCU:

1. **RC-2000 CPU (new style part # 5120054400) MIP Daughter Board:** at the LON Connector.
2. **RC-2000 CPU (old style part # 5120001400):** at the LON Connector (J6).
3. **RC-2000/Network HUB:** within ten feet of the RC-2000, at a secure terminal strip.
4. **Distributed Control Unit (DCU):** at the P1 LON Connector.

IMPORTANT

The physical connection should be checked for the following conditions to verify integrity of the network:

1. Ensure that connections do not have any stray strands of wire that are not properly inserted into the connector. (A stray strand touching across the conductors can cause a cross talk problem).
2. After the connection is made, hold the connector and apply a firm tug on the cable ends to ensure that the connector crimp on the cable is secure.
3. Verify that the proper Network Termination is installed within the network.

Doubly Terminated Network (FTT-10 or TP-78 Networks)

This type of network MUST be a single branch daisy chain configuration and requires that two (2) 120 ohm ¼ watt resistors connect at each physical end of the loop. Drawing 6 below illustrates a doubly terminated network in a single branch daisy chain configuration.

IMPORTANT

Use a doubly terminated network in a single branch daisy chain configuration ONLY.

The doubly terminated network DOES NOT WORK in a star configuration.

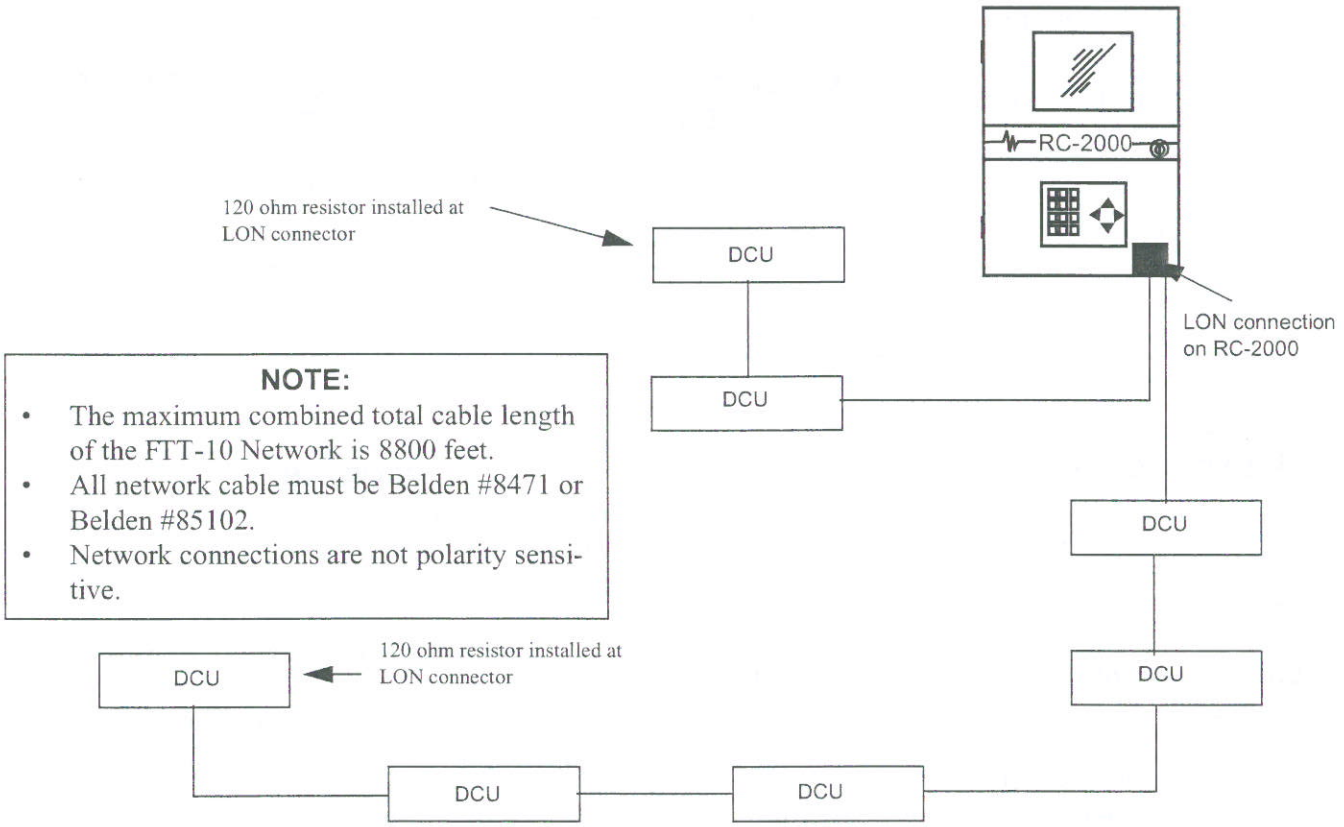

NOTE:

- The maximum combined total cable length of the FTT-10 Network is 8800 feet.
- All network cable must be Belden #8471 or Belden #85102.
- Network connections are not polarity sensitive.

Drawing 6: Doubly Terminated Network (FTT-10 or TP-78)

DCU FTT-10 Repeater Board

When the specified distance limits are exceeded, network strength is degraded. A Danfoss/ECI Repeater Board (Part #20055400) preserves network strength in this situation. The board connects in series into a section of the network. A network operating with a repeater board requires additional termination to the network segment, downstream from the repeater board. Treat the downstream portion of the network as a new network and apply the network termination rules accordingly. Drawing 7 illustrates the network termination that is used with a DCU-FTT-10 Repeater Board.

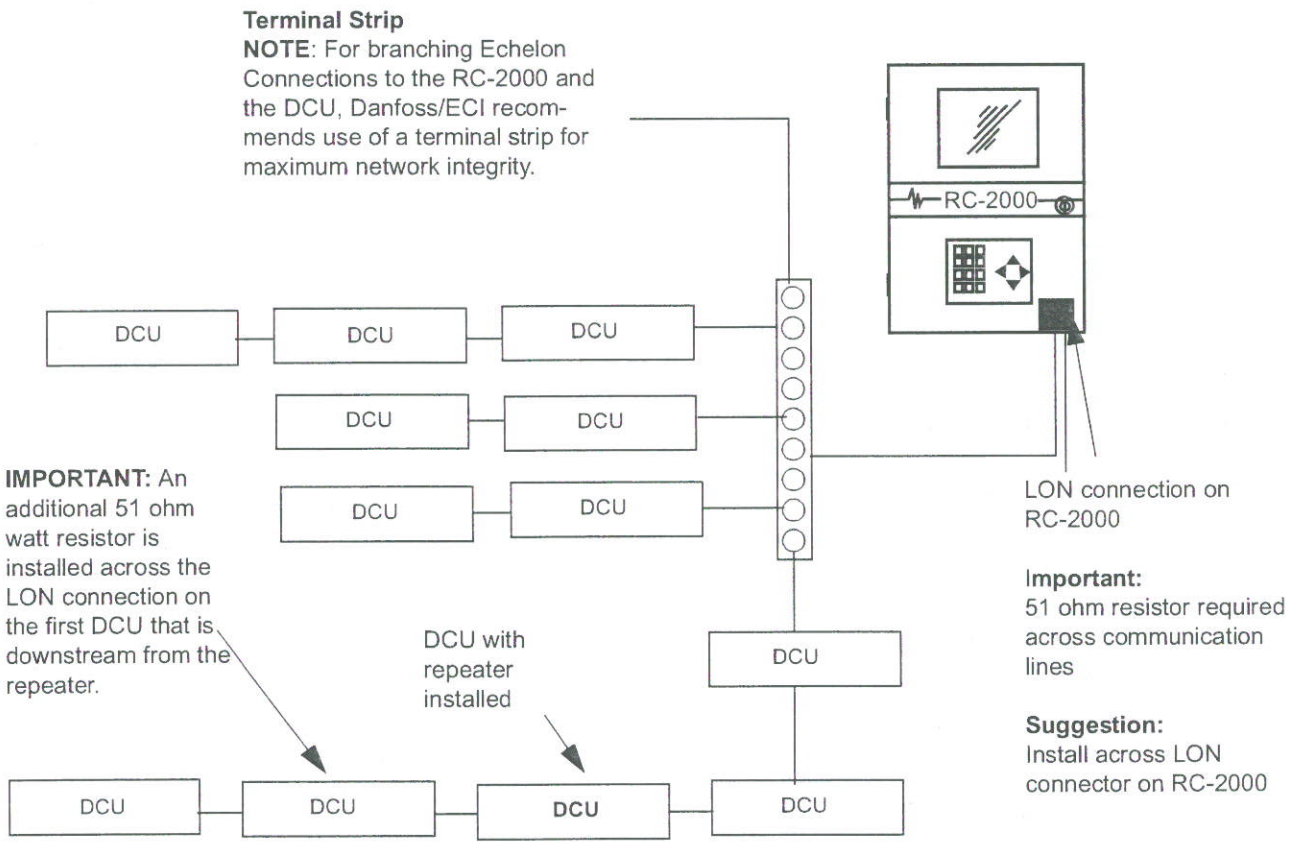

Drawing 7: FTT-10 Network with DCU Repeater Board

RC-2000/DCU START UP

Introduction

The Danfoss/ECI Distributed Control Unit is shipped with application code installed so that the DCU is immediately functional upon installation. Each DCU in a network can be started independently of each other or added to a network at any given time.

NOTE

The DCU is a stand-alone functional case controller. However, it must be installed into an RC-2000 device in order to be part of a networked system of controls, enabling such options as logging and global data transfer.

Program the DCU via the RC-2000 or a Danfoss/ECI handheld terminal. Connect the RC-2000 to the DCU via the two wire 'LON' network connection. Plug the handheld terminal into the DCU via the RJ45 modular type telephone jack at the left side of the unit.

Start Up and ID Procedure

NOTE

DCU application code is factory installed; this allows for immediate case control upon connection. Programming with the handheld unit or the RC-2000 permit DCU setpoint assignment and change. Setpoints may be assigned or changed through the handheld without an established communications link.

IMPORTANT

Before the RC-2000 will communicate with the DCU, it must identify the DCU. Each DCU has a unique "address" within the RC-2000.

Install Node Function

[Install Node] is the process of addressing a particular node on the Echelon Network. It is necessary to make the RC-2000 "see" the DCU as part of the network. Follow the steps below to address the software.

1. Enter [*Your Access Code*] into the RC-2000.
2. Press [8], LON Network.
3. The LON Network screen appears.
4. Install the node address by making the selections listed below in the LON Network screen.
   For:
   a. Node Type ..... Select [*The Node Type**]
   b. Select Action ..... Select [*Install Node*]
   c. Node Start ID ..... Enter [*001*] or the [*Node Address Number to be Installed*]
   d. Node End ID ..... Enter [*001*] or [*Node ID Number to be Installed Last*]
   e. Start Now?..... Select [*YES*]

***NOTE**

The entry in the Node Type line depends on the device to be interfaced with the RC-2000 control software. Select '**Case Contr**' for the Danfoss/ECI DCU.

5. The **Current Node Status Line**, displays **"Press Node 1 ServPin"**
6. **For the Case Contr node type:** **INSERT** the install tool into the handheld port of the DCU and HOLD the button for one second.
7. After a successful node installation, the **Current Node Status Line** displays:

   - A Clear Line or
   - 'Press Node # Serv Pin' (# = next Node in succession to install)

Install Code Function

The [*Install Code*] step is **ONLY PERFORMED** when the Echelon Interface is a **Danfoss/ECI DCU**. (**Case Contr** is entered in the **node type** line of the LON Network Screen.)

Once the DCU has a node address, it **MUST** have code installed. Application code for the DCU that sets up network communication with the RC-2000 and installs setpoints in the DCU resides in the firmware chip of the RC-2000. [*Install code*] downloads this code to the DCU.

Follow the steps below to **install** the **code**:

When in the LON Network Screen, for

a. Node Type ..... Select [*Case Contr*]
b. Select Action .. Select [*Install Code*]
c. Node Start ID... Enter [*001*] or the [*Node Address Number to be Installed*]
d. Node End ID.... Enter [*001*] or [*Node ID Number to be Installed Last*]
e. Start Now?..... Select [*YES*]

The display counts from 0 to 100% as the code is loaded. Once the screen returns to the default settings, the download is finished. If a range of nodes has been set, it automatically proceeds to the next one.

Configure Node Function

Configure the function of the node in the LON Network screen. Access the LON Network screen by following these steps:

1. Enter [*Your Access Code*] into the RC-2000 upon start up.
2. Press [8], LON Network.
3. The LON Network screen appears.
4. To configure the Node Function in the LON Network screen, follow these steps: ***For:***
   a. Node Type.....Select [*Case Contr*]
   a. Select Action....Select [*Configure Node*]
   b. Node Start ID ...Enter [*001*] or [*Node Address Number to be Configured*]
   c. Node End ID ....Enter [*001*] or [*Node ID Number To be Configured Last in Succession*]
   d. Start Now? .....Select [*YES*]

Check Node Function

The RC-2000 software has a node verify function built into it. It polls all nodes that are configured via the LON Network Screen. The Check Node function checks the on-line status of the node, the cause of the last reset, and the version of application code. Use it to verify successful node addressing.

To verify successful node address installation, perform the following steps:

1. Enter [*Your Access Code*] into the RC-2000 upon start up.
2. Press [8], LON Network.
3. The LON Network screen appears.
   To check your node function in the LON Network screen, follow these steps:
   For:
   a. Node Type..... Select [*Case Contr*]
   a. Select Action.... Select [*Check Node*]
   b. Node Start ID... defaults to 001
   c. Node End ID.... defaults to end # checked
   d. Start Now? ..... Select [*YES*]

The lower portion of the LON Network screen displays the node status. S40000 or C40000 indicates a successful node installation. The [*Check Node*] process can be performed at any time to verify status.

Show Node Version Function

The RC-2000 control software polls a particular node and displays the application code version of the node. To perform a [*Show Node Version*], follow the steps below:

1. Enter [*Your Access Code*] into the RC-2000 upon start up.
2. Press [8], LON Network.
3. The LON Network screen appears.
   To poll a particular node and display the application code version, follow these steps:
   For:
   a. Node Type .....Select [*Case Contr*]
   b. Select Action ....Select [*Show Node Ver*]
   c. Node Start ID ...[*001*] or [*Node Address Number to be Shown*]**
   d. Node End ID ....[*001*] or [*Node Address Number to be Shown*]**
   e. Start Now?.....Select [*YES*]

****NOTE**

This action can only be performed on one node (device) at a time.

Remove Node Function

This function removes the node from the ID table of the RC-2000. When the process is complete, the RC-2000 no longer receives or transmits information to that node.

To perform the [*Remove Node*] function, follow the steps listed below:

1. Enter [*Your Access Code*] into the RC-2000 upon start up.
2. Press [8], LON Network.
3. The LON Network screen appears. To remove the node from the network, follow these steps:
   For:
   a. Node Type ..... Select [*Case Contr*]
   b. Select Action ... Select [*Remove Node*]
   c. Node Start ID... Enter [*001*] or [*Node ID Number to be removed*]**
   d. Node End ID.... Enter [*001*] or [*Node ID Number to be Removed*]**
   e. Start Now? ..... Select [*YES*]

****NOTE**

This action can only be performed on one node (device) at a time.

IMPORTANT

The Remove Node action can only be performed with a Danfoss/ECI DCU or a KWIC Echelon Assembly node type.

The Remove Node action must also be done while the node is still connected to the RC-2000.

Setpoint RC → Node Function

Through this action, you may transmit setpoints from the RC-2000 Controller to the DCU. Follow the steps listed below to perform this action:

1. Enter [*Your Access Code*] into the RC-2000 upon start up.
2. Press [8], LON Network.
3. The LON Network screen appears. To transmit setpoints from the RC-2000 Control to the DCU, follow these steps:
   For:
   a. Node Type..... Select [*Case Contr*]
   b. Select Action.... Select [*Setpt: RC → Node*]
   c. Node Start ID... Enter [*001*] or [*Node ID Number to be Sent*]**
   d. Node End ID.... Enter [*001*] or [*Node ID Number to be Sent*]**
   e. Start Now? ..... Select [*YES*]

****NOTE**
This action can only be performed on one node (device) at a time.

Setpoint Node → RC Function

Through this action, you may transmit setpoints from the DCU to the RC-2000. Follow the steps listed below to perform this device action:

1. Enter [*Your Access Code*] into the RC-2000 upon start up.
2. Press [8], LON Network.
3. The LON Network screen appears.
4. To transmit setpoints from the DCU to the RC-2000 Control, follow these steps:
   For:
   a. Node Type .....Select [*Case Contr*]
   b. Select Action ....Select [*Setpt: Node → RC*]
   c. Node Start ID ...Enter [*001*] or [*Node ID Number to be Sent*]**
   d. Node End ID ....Enter [001] or [*Node ID Number to be Sent*]**
   e. Start Now?.....Select [*YES*]

****NOTE**
This action can only be performed on one node (device) at a time.

CASE CONTROL PROGRAMMING AT THE RC-2000

Case Control Menu

Control options for the DCU are programmable via the RC-2000 interface software. To access case control options in the software, follow this path:

1. At the main menu, choose [1] – Temperature/Defrost Control.
2. At the Temperature/Defrost Control menu, choose [4] – Case Control.
3. The Case Control menu appears. The Case Control screens are discussed in the section that follows. An example of the Case Control screen appears below.

```
              Case Control
1 - Status          4 - Names
2 - Setpoints       5 - Setup
3 - Overview        6 - Master Config
```

Case Control Menu Screen

SUGGESTION

Danfoss/ECI recommends that you program the DCU in this order:

1. Configure the system in the Master Config screen.
2. Name the cases in the Names screen.
3. Configure DCUs and sensor assignments in the Setup screen
4. Assign DCU setpoints in the Setpoint screen.
5. Install nodes on the network in the LON Network screen.
6. Check case status in the Status screen,

Case Control Master Config Screen

Select [*6 - Master Config*] from the Case Control Menu screen to enter the Case Control Master Config screen.

The Case Control Master Config screen is used for high level configuration within the RC-2000 to support the case controllers. The selections found on this screen are discussed below.

The **Number of Cases** field reflects the number of cases under the control of the RC-2000. The maximum number that can be selected depends on the ratio of circuits to cases selected in the Case Circuit Config screen.

The Case Alarm Relay is a global alarm relay assigned to the RC-2000 that is de-energized when any case control is in an alarm condition.The condition is reported back to the RC-2000 via the Echelon Network. The alarm relay remains energized when no alarms exist.

The **Dew Point Sensor** is a global dew point sensor assigned to the RC-2000. The RC-2000 takes the dew point reading and transmits it to each DCU via the Echelon Network. (The dew point reading is used to cycle the anti-sweat heaters when applicable.)

The **Light On Times** is a master copy of the case light on and light off times for each day of the week. These settings can be copied to each DCU individually in the Case Setpoints screen. If these settings are left in the default mode, the lights are on at all times.

NOTE

The RC-2000 Control uses a 24 hour time scale (i.e. 02:00 = 2:00 a.m.; 15:00=3:00 p.m.). Midnight=24:00.

```
Master Config
Number of Cases (max 10).. 03
Case Alarm relay....... .. 0-0
Dewpt sensor........... .. 0-00

Light ON Times:
   Sun       00:00 - 00:00
   Mon       00:00 - 00:00
   Tue       00:00 - 00:00
   Wed       00:00 - 00:00
   Thu       00:00 - 00:00
   Fri       00:00 - 00:00
   Sat       00:00 - 00:00
```

Case Control Master Config Screen

Case Control Names Screen

Select [*4-Names*] from the Case Control Menu screen to enter the Case Control Names screen.

The Case Control Names screen enables you to enter descriptive names for each case under the control of the RC-2000. (Numbers are automatically applied to cases.) You may enter up to 20 alphanumeric characters per case. If you do not enter names, the RC-2000 defaults to:

01 Case 01, 02 Case 02, 03 Case 03, etc.

NOTE

The initial number that you see in this screen

(i.e. the first "01" in "01 case 01")

is applied by the RC-2000 and cannot be changed. This number is the actual network node ID, regardless of the user-entered description.

```
                Names

01 Case 01
02 Case 02
03 Case 03
04 Case 04
```

Case Control Names Screen

Case Control Setup Screen

Select [*5 - Setup*] from the Case Control Menu screen to enter the Case Control Setup screen.

Danfoss/ECI case controls are stand alone controllers; hence, the setup performed via the Case Control Setup screen is an independent configuration for each case control.

IMPORTANT

Danfoss/ECI Electronic case controls retain independent processing control; a software application is installed in each case control. When installing, you must ensure that the software version in the case controls matches the software version that resides in the RC-2000 firmware.

About the case control software:

- The case control application code is downloadable; it does not require a hardware chip change.
- The RC-2000 case code may be upgraded via remote download in many instances.

Contact your Danfoss/ECI representative for more information about ECC/RC-2000 software code compatibility.

Case Setup Screen Selections

The **Refrigeration Control** field allows the user to select the valve type to be cycled by the case controller.

NOTE

The Refrigeration Control setting has the largest impact on the layout and the selections that are available in the Case Setpoint screen.

Danfoss/ECI recommends that this field ALWAYS be selected first when setting up a case. The options are listed in Table 8 below.

Table 8: Refrigeration Control Selections

Selection Description	Valve Type
EEV	Pulse type drive electronic expansion valve.
SEEV	Sporlan SEI stepper motor drive electronic expansion valve
ESR	Alco ESR-12 stepper motor drive suction control valve
EEPR	Sporlan CDS-8 stepper Motor drive suction control valve
Refv	On/Off standard solenoid drive liquid or suction valve

NOTE

See "EEV Valve Operation and Safeties" on page 43 if your system contains any cases utilizing EEV refrigeration control valves.

The **Aux Refrig Ctrl** field is the second field that should be assigned when setting up a case controller. Available selections in this field depend on the valve type selected in the Refrigeration Control field. Aux Refrig selections are listed in Table 9.

Table 9: Auxiliary Refrigeration Control Selections Available for Case Setup

Selection	Description
n/a	Default setting; used for most standard control methods
Dual Evap	Available only with EEV, SEEV and Refv Refrigeration Control selections. Dual Evap enables the case to use one valve to cycle refrigeration on a lineup of up to four cases. Eight temperature inputs are available for averaging; they are used as a reference for case setpoint. All cases defrost on one common defrost schedule.
* **Med Temp**	Available for EEV, SEEV, ESR, EEPR, and Refv Refrigeration Control selections. Medium Temp (Med Temp) enables the case to operate via a second set of case and alarm setpoints by changing the state of a digital input from the default OPEN position to the CLOSED position. Doing so sets the refrigeration control to Low Temp. When Med Temp is selected, the medium temp setpoints are directly programmable and the low temp setpoints are programmable proportionally via an offset setpoint.
* **Low Temp**	Available for EEV, SEEV, ESR, EEPR, and Refv Refrigeration Control selections. Low Temperature (Low Temp) enables the case to operate via a second set of case and alarm setpoints by changing the state of a digital input from the default OPEN position to the CLOSED position. Doing so sets the refrigeration control to Med Temp. When Low Temp is selected, the Low Temp setpoints are directly programmable and the Med Temp setpoints are programmable proportionally via an offset setpoint.
Line Up	Available for ESR, EEPR, and Refv valve control. Line up control allows multiple cases to be controlled via one DCU and up to four CPMs. When this mode is selected, the sensor input assignments in the setpoint screen have the option of programming a maximum of eight control sensors. If these sensors are defined as control sensors in the setpoint screen, they are averaged to calculate case temperature. This allows up to four cases to be cycled with one refrigeration valve for the loop. They operate from common defrost initiation and termination setpoints. This mode may also be used if the application requires more than four standard control sensors.

* - Open sw = MT
closed sw = LT > always!

Step Rate

The Step Rate selection is available for EEPR and ESR valve refrigeration control. The Step Rate selection determines how many steps per second that the stepper motor is driven during valve operation. Step rate options are discussed in Table 10 below.

Table 10: Step Rate Description

STEP RATE	DESCRIPTION
60	This is the default setting when one of the stepper drive valves is selected. This setpoint should remain at [60] when using the **ESR Valve**.
120	This is the other option when one of the stepper drive valves is selected. This setpoint should be set at [120] when using the **EEPR Valve** selection.
NOTE The **SEEV Valve** currently requires a special release of DCU code to be merged with the RC-2000 for operation of the valve. The SEEV Valve has a 200 step per second setting that is hard coded in the DCU code. **Therefore, you do not have to select a step rate for the SEEV Valve.**	

Stepper Drive Valve Hardware Considerations

- On the Stepper Drive Daughter Board, Danfoss/ECI Part # 5120045401, the JP-1 jumper requires certain settings:

  For the **60 step rate**, the **JP-1 jumper** should be **REMOVED.**

  For the **120 step rate**, the **JP-1 jumper** should be **INSTALLED**.

- If you need to use an SEEV Daughter Board, Danfoss/ECI recommends using Dual Stepper Daughter Board, Part # 5120045403 for optimal control. Dual Stepper Daughter Board, Part # 5120045403 does not require a jumper setting.

- The Single Stepper Daughter Board, Part # 5120045401, may also be used for SEEV valve control; however, the JP-1 jumper must be installed.

Case Setup Screen Selections (continued)

The **Defrost Termination** field is used to select the type of defrost termination. Defrost termination options include:

1. Time/Temp (default) and
2. Time/Digital.

When Time/Temp is selected for Defrost Termination, four defrost termination sensors are available in the case setpoint screen. If all assigned sensors exceed the assigned term setpoint, the defrost cycle terminates.

If Time/Digital is selected for Defrost Termination, a digital input is available for case defrost termination. If digital is assigned and there is a dry contact closure across the input, the defrost terminates.

The **Defrost Schedule Type** field is not user-selectable at this time. All defrost cycles initiate on a programmed time schedule.

The **Evp Fan Dly** delays the evaporator fan from cycling on after a defrost cycle. If the coil does not reach the fan start temp after this duration of time, the fan cycles on (see 'Evap fan start').

The **Aux Relay** Function is a selection that dictates how the third solid state relay is controlled on the three channel SSR daughter board (Danfoss/ECI part #: 5120045404). This solid state relay can be selected to do different types of control. They are listed and defined in Table 11.

Table 11: Aux Relay Control Selections

Aux Relay Selection	Control Function
ASH	Anti-Sweat Heaters
Refrig	Cycle on/off refrigeration valve coil
Defrost	Cycle defrost
Light	Cycle case lights
Fan	Cycle evaporator fan
Dual temp	Energizes while in the dual temperature mode of operation to turn on evaporator bypass valve

The **Fan during Defrost** selection enables you to turn the fan on or off during defrost. When [*Off*] is selected, the evaporator fan is cycled off during a defrost cycle.

> **NOTE**
> Normally, the fan is on during a defrost cycle. Select [*Norm*] to enable this feature.

The **Lights during Defrost** selection enables you to turn the lights on or off during defrost. When [*Off*] is selected, the case lights are cycled off during a defrost cycle.

> **NOTE**
> Normally, the case lights are on during a defrost cycle. Select [*Norm*] to enable this feature.

The **Anti-Sweats during Defrost** selection enables you to turn the case Anti-Sweat Heaters on or off during a defrost cycle.

> **NOTE**
> Normally, the Anti-Sweat Heaters selection is on during a defrost cycle. Select [*Norm*] to enable this feature.

The **Lights in High Temp Alarm** selection enables you to turn the case lights on or off during a high temperature alarm condition at the case.

> **NOTE**
> Normally, the lights are on during a high temperature alarm condition at the case. Select [*Norm*] to enable this feature.

The **ASH in High Temp Alarm** selection enables you to choose the condition of the case anti-sweat heaters during a high temperature alarm at the case.

> **NOTE**
> Typically, the Anti-Sweat Heaters cycle normally during a high temperature alarm at the case. Select [*Norm*] to enable this feature.

The **Intlk Switch** may be selected for [*Norm*] or [*Time*]. When [*Norm*] is selected, the interlock action is in effect whenever there is an open contact across the interlock switch digital input. When [*Time*] is selected, an additional setpoint for Interlock ON Time is made available. When the interlock switch receives a momentary closure, then reopens, the switch is in effect for the interval assigned to the time setpoint.

> **NOTE**
> The **Interlock Switch** is typically a door switch or case cleaning switch. It is activated on an open condition.

The **Case with Interlock Open** field can be selected for [*Norm*] or [*Off*]. When [*Off*] is selected, and the interlock action is active (open), all loads are in the off state until the interlock action clears (either by timing out or by the door switch state changing). The way the interlock action clears is dependent upon how the Intlk Switch Action is set.

The **Refrig with Interlock Open** field can be selected for [*Norm*] or [*Off*]. When [*Off*] is selected, and the interlock action is active (open), the refrigeration is in the off state until the interlock action clears (either by timing out or by the door switch state changing). The way the interlock action clears is dependent upon how the Intlk Switch Action is set.

The **Fans with Interlock Open** field can be selected for [*Norm*] or [*Off*]. When [*Off*] is selected, and the interlock action is active (open), the evaporator fans are in the off state until the interlock action clears (either by timing out or by the door switch state changing). The manner in which the Interlock Action clears is dependent upon how the Intlk Switch Action is set.

WARNING

When using electronic valve control, do not set the Fans with Interlock Open to [*Off*] without setting the refrigeration to [*Off*], or a liquid floodback condition may occur.

The **Lights with Interlock Open** field can be selected for [*Norm*] or [*Off*]. When [*Off*] is selected, and the interlock action is active (open), the case lights are in the off state until the interlock action clears (either by timing out or by the door switch state changing). The manner in which the Interlock Action clears is dependent on how the Intlk Switch Action is set.

The **Interlock Open Alarm** field can be selected for [*YES*] or [*NO*]. When [*YES*] is selected, the case control sends an alarm to the RC-2000 if the interlock action is active (open) longer than the case alarm delay.

```
01 Case 01
Refrigeration control...... ..EEV
Aux Refrigeration control.. ..Low Temp
Step rate................... ..N/A
Defrost termination........ ..Time/Tmp
Defrost schedule type...... ..Schedule
Evap fan delay............. ..YES
AUX relay function......... ..Dual Tmp
Fans during defrost........ ..Norm
Lights during defrost...... ..Norm
Anti-sweats during defrost. ..Norm
Lights in HiTemp alarm..... ..Norm
ASH in HiTemp alarm........ ..Norm
Intlk Switch Action........ ..Norm
Case with intlk open....... ..Norm
Refrig with intlk open..... ..Norm
Fans with intlk open....... ..Norm
Lights with intlk open..... ..Norm
Intlk open alarm........... ..NO
```

Case Control Setup Screen

Case Control Setpoints Screen

Select [*2 - Setpoints*] from the Case Control Menu screen to enter the Case Control Setpoints screen.

All programmable parameters affecting case control are found on the Case Control Setpoints screen.

> **NOTE**
>
> The Case Setpoints screen displayed with this text has all possible options configured.
>
> In most cases, the Case Setpoints screen only displays a portion of total options available.
>
> The RC-2000 references the Fahrenheit or the Celsius temperature scale. (This option may be modified in the System/Miscellaneous screen.)

The RC-2000 controls case level refrigeration by using a low temperature or a high temperature sensor.

> **NOTE**
>
> The **DEFAULT SETPOINTS** for **low temperature** sensors range from (-40°F to 97°F).
>
> The **DEFAULT SETPOINTS** for **high temperature** sensors range from (0°F to 255°F).
>
> If configured for a **high temperature** sensor, the sensor should be assigned **prior** to assigning setpoints.

Case Setpoints

A complete listing of case setpoints and their functions follows.

The **Cut in** setpoint assigns the temperature at which refrigeration cycles on. It is always available. NOTE: The refrigeration actually turns on after the Cut in setpoint has been reached and the Refr Off Time delay has been met.

The **Cut out** setpoint assigns the temperature at which refrigeration cycles off. It is always available.

The **High and Low Alarms** are temperature alarms for the case. If their value is exceeded in either direction (greater than high or less than low) for the time assigned to the alarm delay, an alarm is generated. These setpoints are activated when an alarm sensor is assigned to the case. If more than one is assigned, the lowest temperature is used for the low alarm, and the highest temperature is used for the high alarm.

The **Evap TD** setpoint is **ONLY AVAILABLE** when selected for the **EEV (pulse type expansion valve)** or **SEEV (stepper drive expansion valve)**.

> **NOTE**
>
> The Evap TD setpoint is the target for the electronic expansion valve algorithm. The controller uses the difference of the Refr In-Refr Out sensors to cycle the valve to target the TD setpoint.

The **Defrost Term Setpoint** is a temperature setting. If all **TERM SENSORS are greater than this setpoint**, refrigeration defrost terminates **BEFORE** timing out. **For the defrost term setpoint to be active,** the system must be configured for temperature, a term sensor must be assigned, and the defrost term setpoint must be assigned.

The **ASH Hi Setpoint** is a temperature setting always available for programming. The anti-sweat heaters are on for the entire ASH duty cycle when the dew point temperature rises above this setpoint value.

The **ASH Lo Setpoint** is a temperature setting always available for programming. The anti-sweat heaters are off for the entire ASH duty cycle when the dew point temperature falls below this setpoint value.

The **Offsets for Second Evap** setpoint **IS AVAILABLE** when **Aux Refrig Control** is set for **Dual Evap**. The range of this setpoint is [(-40° to 97°F)]; the default setting is [00].

> **NOTE**
> If the default setting is active, both evaporators function from the same setpoint values.

The value of this setpoint offsets the entered setpoints for Cut in/Cut out and High Alarm and Low Alarm for operation of the second evaporator. The Control Alarm and Defrost Term sensors are grouped by evaporator, which allows each evaporator's sensors to reference the appropriate setpoints.

The **Offsets for Low Temp** setpoint is available when Aux Refrig Control is selected for Medium Temp. The setpoint for Cut in and Cut out and High and Low Alarm are offset by this setpoint and used for control and alarming when in the low temperature mode of operation.

> **NOTE**
> Only **NEGATIVE offset values** can be **entered** for this setpoint.

The **Offsets for Medium Temp Setpoint** is available when Aux Refrig control is selected for low temperature. The setpoints for Cut in/Cut out and High and Low Alarm are offset by the value of this setpoint and used for control and alarming when in the medium temp mode of operation.

> **NOTE**
> Only **POSITIVE offset values** can be **entered** for this setpoint.

Delays and Durations

The **Refrig Off Time** field is always available in all modes of operation. It is the minimum time in seconds that the refrigeration remains off after the case satisfies the temperature setpoint.

The **Defrost Duration** field is always available in all modes of operation. It is the maximum time in minutes that a defrost cycle runs. If the defrost does not terminate on temperature or input, this is the final and highest level condition that terminates the cycle.

The **Defrost Min On Time** field is always available in all modes of operation. It is the minimum period in minutes that a defrost cycle runs even if the temperature of defrost termination input calls for the defrost cycle to terminate. The defrost cycle must meet this minimum time requirement prior to terminating.

The **Runoff Time** is the period after a defrost cycle that the refrigeration relay is off. Afterwards, normal case refrigeration returns. Runoff time allows evaporator coils to drip off completely before refrigeration begins again.

The **Intlk On Time** field is only available when the Intlk Switch Action is set for [*Time*]. It is the time in minutes that the interlock action (i.e., refrigeration off, case off) remains active after the case control senses a momentary closure of the door interlock switch.

The **Alarm Delay** field is always available in all modes of operation. It is the time in minutes that an alarm condition is active at the case prior to becoming an active alarm.

The **ASH Period** field is always available in all modes of operation. This is the time in minutes that the ASH algorithm uses to cycle the case anti-sweat heaters. The ASH cycle is determined using the following formula:

ASH Cycle Formula to determine ASH cycle time:

ASH ON TIME:

[(Actual Dew point Temp) – (ASH Lo Setpoint)]
[(ASH High Setpoint) – (ASH Lo Setpoint)]

multiplied by

ASH Period Setpoint

= **# OF MINUTES OF ASH ON TIME.**

NOTE

ASH OFF TIME = (ASH period – ASH on time).

Time Settings

The **Defrost Start Times** setpoints are six separate time fields. They are set as **HOURS: MINUTES** (military time).

IMPORTANT

[00:00] is not a valid field.
To set defrost at midnight enter [24:00].

The **Copy Master Schedule Now?** field enables you to copy the schedule entered into the master config screen if you enter [*YES*]. Leave this field [*NO*] to customize the time schedule.

The **Light ON Times** are separate time fields for which the case lights are on. They are programmed in military time.

Sensors and Digital Inputs

The **Refr In1** field enables you to assign the channel for the number one evaporator coil inlet sensor. The sensor is used only to calculate the evaporator coil TD.

NOTE

The Refr In1 field must be used with EEV or SEEV control.

The **Refr Out1** field enables you to assign the channel for the number one coil outlet sensor. The sensor is used only to calculate the evaporator coil TD.

NOTE

The Refr Out1 field must be used with EEV or SEEV control.

The **Refr In2** field enables you to assign the channel for the number two evaporator coil TD.

NOTE

This field must be used with Dual EEV or Dual SEEV control.

The **Refr Out2** field enables you to assign the channel for the number two coil outlet sensor. The sensor is used only to calculate the evaporator coil TD.

NOTE

The Refr Out2 field must be used with EEV or SEEV control.

IMPORTANT

The next four sensors, OR eight sensors if the cases are configured for lineup control, are configurable to several different types, permitting great flexibility when programming a case.

To change the type, move the cursor under the default name, [DchCtrl] and use the up arrow to scroll through available options, which are discussed below.

The **DchCtrl** is the Discharge Sensor that is averaged with other control sensors to cycle the case based on the control setpoint.

The **RtnCtrl** is the Return Sensor that is averaged with other control sensors to cycle the case based on the control setpoint.

The **SpcCtrl** is the Space Sensor that is averaged with other control sensors to cycle the case based on the control setpoint.

NOTE

At least one Ctrl (control) of any type is needed for all case applications.

The **DchMon** is the Discharge Sensor that is assigned as a monitoring point only.

NOTE

The **DchMon** setpoint has no effect on the control of the case.

The **RtnMon** is the Return Sensor that is assigned as a monitoring point only.

NOTE

The **RtnMon** setpoint has no effect on the control of the case.

The **SpcMon** is the Space Sensor that is assigned as a monitoring point only.

NOTE

The **SpcMon** setpoint has no effect on the control of the case.

The **Alarm1-4** setpoints enable you to assign channel numbers for up to four alarm sensors. The alarm sensor channel numbers are used for comparison to the Hi and Lo alarm setpoints.

The **DefTerm1-4** setpoints enable you to assign channel numbers for up to four defrost termination sensors. The defrost termination sensor channel numbers are used for comparison to the termination setpoints.

The **Intlk Sw** setpoint assigns the channel number for the digital input connected to the door switch or case cleaning switch.

The **Rack Number** is the suction group associated with the case. This setpoint allows the RC-2000 to send the calculated suction temperature and any phase loss conditions to the case.

```
Setpoints
   Cut-in:            -15f        Cut-out:            -16f
   High alarm:        20f         Low alarm:          -30f
   Evap TD:           9f          ASH lo:             0f
   ASH hi             0f

Delays and Durations:
Refr off time:        00s         Defr duration:      60m
Defr min on:          35m         Runoff time:        05m
Alarm dly:            30m         ASH period:         00m

Defrost start times:              03:00     15:00     00:00
                                  00:00     00:00     00:00
Copy master schedule now?......NO
Light ON Times:
Sun       00:00 - 00:00
Mon       00:00 - 00:00
Tue       00:00 - 00:00
Wed       00:00 - 00:00
Thu       00:00 - 00:00
Fri       00:00 - 00:00
Sat       00:00 - 00:00

Sensors and Digital Inputs:
Refr In1     04     TP2      Refr Out1     03     TP2
Refr In2     00     --       Refr Out2     00     --
DchCtl1      02     TP2      DchCtl2       01     TP2
DchCtl3      00     --       DchCtl4       00     --
Alarm1       02     TP2      Alarm2        00     --
Alarm3       00     --       Alarm4        00     --
Def Term1    02     TP2      Def Term2     00     --
Def Term3    00     --       Def Term4     00     --
Intlk Sw     00     --

Rack Number:  01

                          **
                          **
```

Case Control Setpoints Screen

Case Control Status Screen

Select [*1-Status*] from the Case Control Menu to enter the Case Control Status Screen.

Case State

On the Case Control Status screen, the **first line displays** the **state of the case**. Table 12 displays the different case states that you may see on this line.

Table 12: Case State Abbreviations and Definitions

Status Abbreviation	Definition
Refr On	Refrigeration on
Refr Off	Refrigeration off
Refr On FS	**Refrigeration on fail safe,** means a sensor has gone bad.
Refr Off-Phs	**Refrigeration is off** because of a phase loss.
Refr Off-HiP	**Refrigeration off,** on high pressure; this takes place when the Refr In sensor and the Suction Temp are both five degrees above the case setpoint.
Defr XXXm	**Normal defrost,** xxx minutes remaining
Emg Defr XXXm	**Emergency defrost,** xxx minutes remaining
RunOff XXXm	**Run off after defrost,** xxx minutes remaining
FanDly XXXm	Evaporator **fan delay** after defrost, xxx minutes remaining
CaseOff	**Case** has been **turned off** in **software** or has gone **off-line with RC-2000**.
Sw Refr On	**Interlock switch** has **Refrigeration on**.
Sw Refr Off	**Interlock switch** has **Refrigeration off**.

Case Setpoints/ Sensor Readings

The **second line reflects** the **setpoints** entered in the Setpoint screen that directly affect outputs. Refer to Table 13 for a list of them.

Table 13: Case Setpoints

Case Setting	Setpoint Field
Temp	Control Setpoint
Term	Defrost Termination
HiAlm	High Alarm Setpoint
LoAlm	Low Alarm Setpoint
TD1	Evaporator #1: Temperature Difference
TD2	Evaporator #2: Temperature Difference

The **third line** on the **Case Status** screen reflects the user-defined values for each of these setpoints.

Actual case readings (inputs) for the setpoints that are available on line 2 are displayed on **line four**. In addition, any system malfunctions are displayed here through alarm or warning icons. Table 14 describes the entries on this line.

See the Case Status Screen on the next page for a breakdown of the lines on the screen.

Table 14: Case Sensor Readings

Temp: AVERAGE of all Ctrl sensors
Term: displays the **LOWEST** Defr Term Sensor reading
HiAlm: displays the **HIGHEST** Alarm Sensor Reading
LoAlm: displays the **LOWEST** Alarm Sensor Reading
TD1 = Refr In1 or Suct Temp - Refr Out1 **TD2** = Refr In2 or Suct Temp - Refr Out2 **NOTE:** • The control reads the **RefrIn Sensor** and the **Suction Temp**; it then uses the **coldest** reading in the **TD calculation**. • If the control is using the **Suction Temp** for the calculation, it displays a **[#]** symbol next to the actual TD reading. • **TD = Temperature Difference**
ALARM/WARNING ICONS DISPLAYED: • **Reverse Video L:** Low Temperature Alarm • **Reverse Video H:** High Temperature Alarm • **Reverse Video S:** Sensor Fault • **Reverse Video I:** Interlock Action Time Delay Expired • **Reverse Video O:** Alarm Override • **Reverse Video ↓:** Off-line

Case Outputs/ Overrides

The **line beginning with 'Out'** lists the case outputs, and the line under that displays the actual status of each output.

The **line beginning with 'Ovr'** reflects the override status for each case control output.

> **NOTE**
> You may override DCU outputs by changing the override status line manually on this screen. If the device is in override mode, an override message displays on the case state line.

```
CaseOff
        Temp     Term     HiAlm    LoAlm    TD1      TD2
Spt:    -15f     58f      20f      -30f     9f       9f
Act:    0f       0f       0f [H]   0f [L]   0f       0f

Out:    Fan   Lite   Defr   ASH    Aux    EEV1   EEV2
Act:    Off   Off    Off    000%   --     000%   000%
Ovr:    n/a   n/a    --     n/a    --     000%   000%

Inputs              Offset              Actual
Refr In1            0f                  0f
Refr Out1           0f                  0f
DchCtl1             0f                  0f
RtnMon2             0f                  0f
Alarm1              0f                  0f
Defr Term1          0f                  0f
Suct Temp           10f                 0f
```

Case State
Setpoints
Setpoint Values
Actual Case Readings
Outputs
Output Status
Override Status

Case Control Status Screen

EEV Valve Operation and Safeties

In an attempt to achieve a constant temperature differential across the evaporator coil, the Case Controller monitors four temperature parameters:

- Coil Inlet Temperature
- Coil Outlet Temperature
- Case Temperature
- Saturated Suction Temperature

They are explained below.

Coil inlet and Coil outlet temperature readings are read directly from the sensors mounted on the coil.

Case temperature is derived from the sensors assigned as control sensors in the Case Setpoint screen.

> **NOTE**
>
> For the case temperature reading, the case controller averages the sensors if more than one has been designated as a control.
>
> Sensors designated as monitor sensors are not included in the temperature calculation.

Saturated suction temperature is sent via the communication connection between the RC-2000 and the DCU.

> **IMPORTANT**
>
> In order for the suction temperature to be sent, the rack number must be assigned in the Case Setpoint screen.
>
> Be sure to select the proper refrigerant in the Rack Setpoint screen in the RC-2000.

Sequence of Case Controller Valve Operation

1. **Case Temperature Check:** The case controller first checks the case temperature.

   If the **case temperature** is **HIGHER** than the **cut-in setpoint**, the **valve** is allowed to **pulse** (cycle).

   If the **temperature** is **BELOW** the **cut-out setpoint**, the **valve closes** (goes to 0%).

2. **If the valve is allowed to cycle,** the **case controller determines** the **temperature differential (TD)** of the **coil**.

   To determine the temperature differential, the case controller looks at the coil in and saturated suction temperature (with offset); it selects the colder one.

> **NOTE**
>
> It is customary to offset the suction temperature at the Case Controller by at least (+10°). This causes the [*Coil In*] to be the primary value for determining TD.

Once the colder temperature has been established, it is subtracted from the [*Coil Out*] to determine TD.

> **IMPORTANT**
>
> When the saturated suction temperature is used to determine the TD, a [#] sign is displayed next to the TD reading on the RC-2000. The saturated suction temperature should **ALWAYS** have a +10° offset to prevent it from being the primary control.
>
> Saturated suction temperature is used as an indication of a rack fault. If **BOTH** the suction temperature and coil in temperature are 5° higher than the case setpoint, the case controller turns the valve off and displays a [*Refr Off-HiP*] in the Case Status screen.

3. After the TD is determined, the valve begins to pulse to achieve the desired value. A solid state output on the DCU pulses an Electronic Expansion Valve (EEV).

> **NOTE**
> The valve is cycled in a six second window. *For example*, if the valve is set to 50%, the valve is on for three seconds and off for three seconds.

4. The DCU uses an algorithm to determine the best percentage to maintain steady coil TD. If the TD is at or below that setpoint, a fixed percentage is calculated from the natural fill/boil cycle of the evaporator. When the TD begins to rise, a variable percentage is used that is also determined from the evaporator cycle.

> **NOTE**
> In the event of a low TD (TD two degrees lower than the TD setpoint) for longer than a minute, the case controller drops the valve percentage by 1/3 of the fixed valve percentage.

5. After a defrost, the valve is restricted to 50% through the first minute. At that point, the valve is allowed to open 100%, as long as the evaporator is in a pull down mode.

   Pull Down Mode: A case temperature six degrees above setpoint.

> **NOTE**
> Once the case is below pull down, it is restricted to 90%.

Override Pull Down Feature

The Case Control Override Pull Down feature caps the maximum EEV percentage at 50% until a predetermined time has expired.

An override pull down occurs after a defrost cycle, a hardware or software reset, a phase loss clear, or a high pressure clear. Table 15 lists the override pull down occurrences, along with their duration:

Table 15: Case Control Override Pull Down Occurrences and Duration

Override Pull Down	Duration
After Defrost	1 minute
After hardware or software reset	10 minutes
After phase loss condition clears	10 minutes
After high pressure condition clears	10 minutes

> **NOTE**
> - A **high pressure safety shut down WILL NOT OCCUR during** an **override pull down** condition.
> - A **phase loss shut down WILL OCCUR during** an **override pull down condition**.

Fault Conditions/ Safeties

Sensor Fault Condition

The DCU recognizes a sensor fault condition with a Refr In or Refr Out sensor.

NOTE

- A Refr In or Refr Out sensor is considered bad if it reads (+97°F) or (-40°F).
- If the Refr In sensor reading is at (+97°) or (-40°), the saturated suction temperature is used to determine evaporator TD.
  IF there is not a valid suction temperature (reading 97°), the valve is set to a failsafe percentage, determined by the valve algorithm.
- If either of these conditions is present on the Refr Out sensor, the valve is set to a failsafe percentage, determined by the valve algorithm.

Phase Loss Safety

The DCU turns refrigeration off to an EEV case **IF** a rack number is assigned to the DCU in the Case Setpoints screen, **AND** that particular rack has logged a phase loss condition. This is displayed in the Status screen as [*Refr Off Phs*].

NOTE

A Phase Loss condition clears as soon as the phase condition clears at the rack. After a phase loss, the control caps the valve at 50% for ten minutes as a flood back safety.

High Pressure Safety

The RC-2000 uses a pressure to temperature conversion, which depends on the refrigerant type of the suction group for the EEV cases. The conversion is accumulated as a rolling average (based on the latest ten readings) by the RC-2000; it is sent to each case control that has the rack number assigned for the corresponding rack (1-4).

IF the Refr In temperature **AND** the suction temperature are both five degrees greater than the case setpoint, the case turns the refrigeration off and the status reads [*Refr Off-HiP*]. This condition clears as soon as the suction temperature **OR** the Refr In temperature pulls back within five degrees of the case setpoint. After a high pressure fault, the control caps the valve at 50% for ten minutes as a flood back safety.

The case control deactivates the high pressure safety feature if the following conditions occur:

1. A rack number is not assigned to the Case Setpoint screen.
2. The RC-2000 loses communication with the DCU (after three minutes, the high pressure clears).
3. The DCU is in an override pull down condition.
4. The RC-2000 defines the suction temperature as invalid.

Invalid Suction Temperature (as Defined at the RC-2000)

The following conditions prompt the RC-2000 to send an invalid suction temperature message to the case controller:

- IF the **suction pressure** is **greater than 95 psi,**

or,

- IF the **suction pressure** is **greater than the 'ignore suction temp below' setpoint**.

HANDHELD PROGRAMMING

The handheld allows direct programming of the DCU at the unit. Insert and remove the handheld at the RJ11 plug on the DCU.

NOTE
The handheld may be removed or inserted at any time without affecting DCU operation.

Handheld Programming Notes

Please note the following handheld programming basics before using the device:

1. Press [*Enter*] to access the fields and change data.

2. Use the numbers and arrows to enter data.

3. Press [*Esc*] to exit from a field without changing the original data.

4. If the cursor is located at a non-programmable field, press [*Enter*] to advance to the next field.

5. Press [↓] to go to the first programmable field in the next line (or the last field if none are programmable).

6. Press [↑] to automatically go to the first programmable field of the previous line.

7. The cursor changes from a block to an underline when:

   a. you are in a programmable field
   or
   b. a number or arrow key can be used to select new data within the field.

Handheld Special Function Keys

The handheld has four special function keys. They are listed and explained below:

EMRG DEFR (emergency defrost): allows the user to set the case into a time or normal defrost cycle.

EMRG REFR (emergency refrigeration): allows the user to set the case into a refrigeration override condition or just override the EEV % (if used).

CASE OFF (all case functions are off): shuts the case down. This is useful if the case is experiencing problems and will be empty for some time or if the case is being cleaned or serviced.

NORMAL OP (normal operations): allows the case to be returned to normal operations. This clears out any emergency functions or the case off function. This key also allows access to the alarm override function.

HANDHELD PROGRAMMING OPTIONS

Main Menu

The Handheld main menu displays upon start up. An access code is not required for entry. The first line indicates the DCU name. The last line displays the application code version currently in use (for example, D2.11CT).

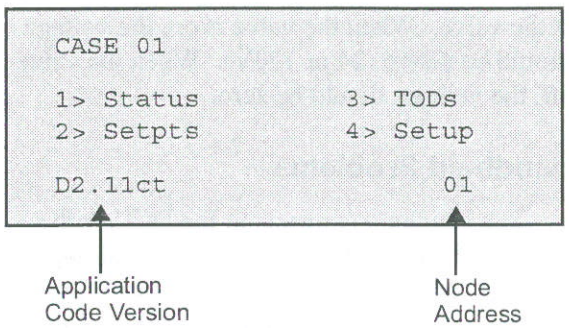

Handheld Main Menu

> **IMPORTANT**
> Know the version number of DCU code in use when corresponding with Danfoss/ECI Field Service or Engineering.

The programming choices on the main menu include:

- **[1] Status:** Confirm operation and determine any changes needed here.
- **[2] Setpoints:** Assign the DCU setpoints here.
- **[3] TODs:** Assign and access the TOD setpoints here.
- **[4] Setup:** The Setup menu programs the DCU for the control configuration desired.

Changes can be made at any time and are automatically sent to the RC-2000.

Handheld vs Direct Programming

The programming choices for the handheld unit differ only slightly from those discussed for direct entry at the RC-2000 Control. Please refer to the following sections in this manual for appropriate definitions and explanations:

- **Status:** See "Case Control Status Screen" on page 40.
- **Setpoints**: See "Case Control Setpoints Screen" on page 35.
- **TODs:** See "Time Settings" on page 37.
- **Setup:** See "Case Control Setup Screen" on page 30.

> **SUGGESTION**
> Danfoss/ECI recommends that you program the DCU in this order:
>
> 1. Configure the DCU at the Setup menu.
> 2. Assign DCU setpoints at the Setpoint menu.
> 3. Assign TOD setpoints at the TOD menu.
> 4. View DCU configuration at the Status menu.

TROUBLESHOOTING

Overview

Communication Problems

Communication problems are usually related to wiring errors. The first thing to check is the integrity of the wire connections at each DCU. Since the wiring is not polarity sensitive, verification of good connections is sufficient. If the problem is failure to communicate to the RC-2000, the DCU ID should be reinstalled through the RC-2000.

Control Problems

Many control-related problems are due to improper programming, wiring, or fuse issues. First, inspect the wiring for good connections and check that the loads are connected to the proper terminals on the DCU. Check the fuses. If they are blown, the reason should be determined and corrected. (In no case should the standard fuse value be replaced with a higher value).

Valve Problems

Valve problems may be caused by faulty coils. Check to be sure that the coil is good by using an ohmmeter to check the coil resistance per the manufacturer's specification. Be sure that the valve body is not collecting moisture, as this may cause the coil to fail. The voltage can be checked at the valve. When the valve is on, the voltage should be active (24 or 120V). When the valve is off, the voltage should be zero.

Handheld Problems

The handheld connects to the DCU with a six conductor phone cable. The cable should be checked with a cable tester. Verify that the DCU is powered up and that the power LEDs are lit. If the display lights, but the characters are not intelligent, the setup of the handheld has been corrupted. To set up the handheld:

1. Hold the EMG DEFR key while plugging in the handheld.
2. Press the EMRG REFR key.
3. Use the CASE OFF and NORM OP keys to change the parameters so they are: 4800 N81

RC-2000 Alarms

1. Alarm log entry "Offline" indicates that the respective DCU is not responding as expected by the RC-2000. Some causes of this condition are as follows: tripped breaker, loose LON communications connection, or locked up DCU. To attempt to bring a DCU on-line that has been determined to have power and good communication connections, a RESET should be attempted from the Case Override screen on the RC-2000. The second attempt should be to depower and power the DCU back up. The last resort is to re-download code to the DCU.
2. The "Offline" alarm is indicated in the status screen with a reverse video "down arrow" symbol.

Problems not covered above should be directed to Danfoss/ECI's field service department at 410-403-4000. (See Note on p.59)

DCU-Echelon Communications

General Notes:

1. **DCU-RC-2000 Communication Wiring:** 2-wire, 16 awg. unshielded twisted pair cable (Belden #85102 Plenum) or (Belden #8471 Non-Plenum).

2. **Maximum Wire Length:** 1600 feet*

   *Adhere to all network guidelines.

3. **Polarity Sensitive:** No

Trouble Checks:

At the RC-2000: The yellow LON LD1 light on the RC-2000 CPU (new style) lights (flickers) to indicate successful communications to the DCU.

If it is not lit:

1. Reset the RC-2000 by removing and replacing power to the RC-2000 unit. It should now light.
2. If it is still not lit, the problem may be in the MIP Daughter Board on the RC-2000. Check to make sure the MIP Daughter Board is tightly secured. Tighten the MIP board if it is loose.

   If the board still does not light, there may be a problem with the RC-2000 MIP Daughter Board. Contact Danfoss/ECI for assistance.

Trouble Checks:

On the MIP Daughter Board: the MIP Daughter Board has a red (Tx) LED and a yellow (Rx) LED.

- The red (Tx) LED indicates message transmission from the RC-2000.
- The yellow (Rx) LED indicates message receipt at the RC-2000.

Verify successful message transmission and receipt by observing the MIP Daughter Board LEDs.

> **NOTE**
>
> Danfoss/ECI case controls are stand-alone control devices. If Echelon communications are not functioning, the case is still controlled by the Danfoss/ECI case control.
>
> Control of the case may be verified at the case by accessing Status with a Danfoss/ECI handheld device.

Trouble Checks:

On the DCU: the DCU Central Processing Unit (CPU) has a red (Tx) LED and a yellow (Rx) LED.

- A lit red (Tx) LED indicates transmissions from the DCU.
- A lit yellow (Rx) LED indicates successful message receipt by the DCU.

Verify successful message transmission and receipt at the DCU by observing these LEDs.

To force a DCU response: change the time at the RC-2000. Changing the time at the RC-2000 or simulating a time change (by entering the screen and pressing enter three times), forces a response from all DCUs. (They report to the RC-2000 quicker if the status is not showing an active update.)

Power

General Notes
Functional Power:

The DCU receives its functional power in two ways:

1. From a Danfoss/ECI Case Power Module (CPM) or a Hussman Power Module. These power modules provide power to the DCUs. They supply 24VAC through an 8 pin interconnect cable. The cable connects to the DCU CPU underneath the daughter board via an 8 pin Molex connector.
2. From an optional transformer. The transformer supplies power when a power module is not used. It can be mounted in the DCU enclosure. It has an 8 pin connector that can be plugged into the DCU underneath the daughter board via an 8 pin Molex connector.

Trouble Checks
Functional Power:

Voltage Check: A Voltage Check can be performed on the CPM cable at Pin 1 (brown) and Pin 5 (green) for 24VAC.

The LD6+8VDC and LD7+12VDC lights should be lit on the DCU, indicating that power is being provided to the DCU.

General Notes
Power to the CPM:

The DCU has LEDs under the daughter board that show a call to a load (i.e., fans, lights).

Trouble Checks
Power To CPM:

If a load does not turn on, check the LED associated with the load on the DCU CPU (under the daughter board) to verify voltage presence for the output call. Table 16 lists DCU loads, LED numbers, and LED status when the load is on.

Table 16: DCU LED Status/ Load On

Load	LED Number	LED State/Load On
Fan	LD2	Off
Lights	LD3	On
Defrost	LD4	On
Anti-sweats	LD5	On

IMPORTANT

If the LED indicates improper load function, Danfoss/ECI recommends that you check the voltage of the load in question. The table below lists voltage checks for the CPM loads

Table 17: CPM Load Voltage Checks

LOAD	PINS TO CHECK ACROSS	VOLTAGE WHEN CALLING FOR LOAD
Fan	7 Violet to 4 Yellow	0VDC
Lights	3 Orange to 4 Yellow	12VDC
Defrost	6 Blue to 4 Yellow	12VDC
Anti-Sweats	2 Red to 4 Yellow	12VDC
Output Supply	8 White to 4 Yellow	12VDC all the time

Software

Install Nodes

General Notes:

- You only need to install nodes upon system start-up or DCU replacement.
- The RC-2000 stores the node address in a table once it has been installed.
- Once a DCU Install Node has been installed in an RC-2000, it may be replaced by another DCU by installing the new DCU at the same ID number. If a DCU needs to be removed without being replaced, an Un-Install process must be performed. If a DCU is removed from a store without performing this process, you will receive off-line alarms for the DCU until the process is performed. Contact Danfoss/ECI for further Un-Install process details.

Trouble Checks:

If the node cannot be installed: check the LD1 (Tx) Red LED on the DCU.

IMPORTANT

Each time you press the install button, this LED should blink.

If the LD1 Tx does not blink when you press the install button, the DCU CPU needs to be replaced.

If the LD1 Tx Red LED on the DCU blinks when pressing the install button, there is a problem with the network integrity and not the DCU hardware.

Install Code

General Notes:

Each DCU should have an application code installed after the node or ID has been installed.

NOTE

The DCUs have application code installed upon delivery; this allows the unit to be brought on-line for refrigeration without establishing communication with the RC-2000.

The application code varies, depending on the control type.

IMPORTANT

When servicing the store, write down the application code BEFORE calling Danfoss/ECI for assistance.

SUGGESTION

Note the DCU application code on the handheld for easy reference. If you do not use a handheld, the DCU application code can be accessed in the RC-2000.

To determine the DCU application code loaded in the RC-2000, enter the LON Network screen and select [*Install Code*]. The application code appears.

IMPORTANT

If entering the RC-2000 LON Network screen for obtaining the application code ONLY, do not select [*YES*], or you will initiate download.

Install Code Trouble Checks:

Anytime an [*Install Code*] process is performed, always verify that the process is successful (See "Install Code Function" on page 23.). If it is not, retry the download. If the process fails again, disconnect the case control from the network and contact Danfoss/ECI for assistance.

When the download code process fails, DO NOT ATTEMPT to continue the download process to any other units.

IMPORTANT

All DCUs are shipped with application code installed; therefore, if download fails to the first unit, do not download to the other DCUs until the network integrity is repaired.

Danfoss/ECI Case Controls are delivered with production code installed and therefore are control capable upon applying power.

Check Node

General Notes:

The [*Check Node*] function polls all units for a status response (See "Check Node Function" on page 24.). The RC-2000 lists status messages for each DCU that is addressed on the network. The [*Check Node*] function originates at the RC-2000. Enter the LON Network screen to initiate it.

NOTE

When you initiate the [*Check Node*] process, the RC-2000 displays a six character status message for each of the DCUs.

The last character in the [*Check Node*] status message indicates whether the code in the RC-2000 and the DCU match.

NOTE

After a power failure, you must select [*Install Code*] in the RC-2000 LON Network screen and allow the code to decompress BEFORE checking the nodes. The [*Check Node*] works after a power failure, but the last character is not valid unless you perform the code decompress step.

Check Nodes Trouble Checks:

If you question a DCU's communication status, perform a [*Check Node*] to investigate. If the [*Check Node*] doesn't work, or returns a 0 in the second character, the DCU is not reporting and is off-line. Perform the communication checks if this problem occurs.

ID Tables

Special Notes:

All DCUs that are installed have an ID or address. The address is stored in flash memory at the RC-2000 in an ID (node) table.

IMPORTANT

Danfoss/ECI recommends that the technician download the RC-2000 program into a PC to back up the ID (node) table after IDing the DCU. If the ID (node) table is not backed up, and the RC-2000 loses the program, the IDs will need to be reinstalled to every DCU to re-establish network communications.

When upgrading firmware in a DCU store after transmitting the program to the firmware, an extra step is required. Enter the RC-2000 LON Network screen on the PC while on-line with the RC-2000. Select [*Send ID table*] and the ID table information transmits to the RC-2000.

APPENDIX A: REFERENCE INFORMATION

Table 18: TP2L Ohms - Volts Conversion for the DCU

°Fahrenheit	°Celsius	Ohms	Volts
(-57)	(-50)	150395.0	3.751
(-55)	(-49)	140087.0	3.733
(-54)	(-48)	130553.0	3.715
(-52)	(-47)	121727.0	3.696
(-50)	(-46)	113553.0	3.676
(-49)	(-45)	105981.0	3.655
(-47)	(-44)	98963.0	3.633
(-46)	(-43)	92452.0	3.610
(-44)	(-42)	86412.0	3.585
(-42)	(-41)	80803.0	3.559
(-40)	(-40)	75593.0	3.533
(-38)	(-39)	70753.0	3.505
(-36)	(-38)	66252.0	3.475
(-35)	(-37)	62066.0	3.445
(-33)	(-36)	58171.0	3.413
(-31)	(-35)	54542.0	3.380
(-29)	(-34)	51164.0	3.346
(-27)	(-33)	48017.0	3.311
(-26)	(-32)	45081.0	3.274
(-24)	(-31)	42343.0	3.236
(-22)	(-30)	39789.0	3.197
(-20)	(-29)	37404.0	3.156
(-19)	(-28)	35176.0	3.115
(-17)	(-27)	33095.0	3.072
(-15)	(-26)	31150.0	3.028
(-13)	(-25)	29331.0	2.983
(-11)	(-24)	27629.0	2.937
(-9)	(-23)	26036.0	2.890
(-8)	(-22)	24545.0	2.842
(-6)	(-21)	23148.0	2.793
(-4)	(-20)	21839.0	2.744
(-2)	(-19)	20611.0	2.693
0	(-18)	19461.0	2.642
1	(-17)	18381.0	2.591
3	(-16)	17368.0	2.538
5	(-15)	16416.0	2.486
7	(-14)	15522.0	2.433
9	(-13)	14683.0	2.379
10	(-12)	13893.0	2.326
12	(-11)	13151.0	2.272
14	(-10)	12453.0	2.219
16	(-9)	11796.0	2.165

Table 18: TP2L Ohms - Volts Conversion for the DCU

18	(-8)	11177.0	2.111
19	(-7)	10595.0	2.058
21	(-6)	10046.0	2.005
23	(-5)	9529.2	1.952
25	(-4)	9041.7	1.899
27	(-3)	8582.0	1.847
28	(-2)	8148.4	1.796
30	(-1)	7739.2	1.745
32	0	7353.0	1.695
34	1	6988.1	1.645
36	2	6643.4	1.597
37	3	6317.8	1.549
39	4	6010.0	1.502
41	5	5719.1	1.455
43	6	5443.7	1.410
45	7	5183.2	1.366
46	8	4936.8	1.322
48	9	4703.3	1.280
50	10	4482.3	1.238
52	11	4279.9	1.199
54	12	4074.5	1.158
55	13	3886.4	1.119
57	14	3709.9	1.082
59	15	3538.8	1.046
61	16	3378.3	1.010
63	17	3225.9	0.976
64	18	3081.3	0.942
66	19	2939.5	0.909
68	20	2813.6	0.878
70	21	2689.6	0.848
72	22	2571.8	0.818
73	23	2459.8	0.790
75	24	2353.3	0.762
77	25	2252.0	0.735
79	26	2156.6	0.710
81	27	2063.9	0.684
82	28	1976.6	0.660
84	29	1893.4	0.637
86	30	1814.2	0.614
88	31	1738.8	0.592
90	32	1666.9	0.571
91	33	1598.3	0.551
93	34	1532.9	0.532
95	35	1470.6	0.513
97	36	1411.1	0.495
99	37	1354.4	0.477
100	38	1300.2	0.460

Table 18: TP2L Ohms - Volts Conversion for the DCU

102	39	1248.5	0.444
104	40	1199.2	0.428
106	41	1152.0	0.413
108	42	1107.0	0.399
109	43	1063.9	0.385
111	44	1022.8	0.371
113	45	983.4	0.358
115	46	945.8	0.346
117	47	909.8	0.334
118	48	875.4	0.322
120	49	843.5	0.311
122	50	810.9	0.300
124	51	780.8	0.290
126	52	751.9	0.280
127	53	724.1	0.270
129	54	697.7	0.261
131	55	672.2	0.252
133	56	647.9	0.243
135	57	624.5	0.235
136	58	602.2	0.227
138	59	580.7	0.220
140	60	560.1	0.212
142	61	540.4	0.205
144	62	521.4	0.198
145	63	503.2	0.192
147	64	485.7	0.185
149	65	468.9	0.179
151	66	452.8	0.173

Jumper Configurations For DCU Mother Board

Configurations for all jumpers are silk-screened on the PCB.

TP2L SENSORS:
JP3-12 should be in default position
JP18-27 should be open

TP2H SENSORS:
JP3-12 should be in default position
JP 18-27 should be shorted

TP1 SENSORS:
JP3-12 should be in default position
JP18-27 should be shorted

ASH OUTPUT CONTROL
JP17 steady

OUTPUTS
ASH: JP16 SRC Relay
DEF: JP15 SRC Relay
LITE: JP14 SRC Relay
FAN: JP13 SRC Relay

Table 19: TP-2 Sensor Temp Resistance

TEMP. °F	RESISTANCE	TEMP °F	RESISTANCE	TEMP. °F	RESISTANCE
-30	56312	13	12859	56	3829
-29	50962	14	12475	57	3730
-28	49193	15	12104	58	3635
-27	47491	16	11745	59	3542
-26	45854	17	11399	60	3451
-25	44279	18	11063	61	3364
-24	42764	19	10739	62	3278
-23	41306	20	10425	63	3196
-22	39904	21	10122	64	3115
-21	38533	22	9828	65	3037
-20	37253	23	9544	66	2961
-19	36002	24	9269	67	2887
-18	34797	25	9003	68	2815
-17	33637	26	8745	69	2746
-16	32519	27	8496	70	2678
-15	31443	28	8254	71	2612
-14	30406	29	8020	72	2548
-13	29407	30	7794	73	2486
-12	28444	31	7575	74	2425
-11	27516	32	7363	75	2366
-10	26622	33	7157	76	2309
-9	25759	34	6958	77	2252
-8	24928	35	6765	78	2199
-7	24127	36	6578	79	2146
-6	23354	37	6396	80	2095
-5	22608	38	6221	81	2045
-4	21889	39	6050	82	1997
-3	21195	40	5885	83	1949
-2	20526	41	5725	84	1903
-1	19880	42	5570	85	1859
0	19257	43	5420	86	1815
1	18655	44	5274	87	1773
2	18074	45	5133	88	1731
3	17513	46	4995	89	1691
4	16972	47	4862	90	1652
5	16449	48	4733	91	1614
6	15944	49	4608	92	1577
7	15457	50	4487	93	1541
8	14986	51	4369	94	1506
9	14531	52	4254	95	1471
10	14091	53	4143	96	1438
11	13666	54	4035	97	1405
12	13255	55	3931		

RC-2000 Quick Reference Guide

From the Banner Screen with the Danfoss/ECI Logo, Date, and Time:

DCU Case Status

1. Press [ENT] three times.
2. Press [4].
3. Press [1]. The Status screen appears.
4. Press [→] and [←] to select the desired case status.
5. Press [EXIT] four times to return to the time and date banner screen.

DCU Emergency Defrost

1. Press [ENT] three times.
2. Press [5]. The DCU Override screen appears.
3. Press [ENT] two times.
4. Press [↓] to select "DEFR-TIME."
5. Press [ENT]. The case starts the defrost cycle.
6. Press [EXIT] four times to return to the time and date banner screen.

APPENDIX B: WARRANTY, REPAIR PROCEDURE AND PARTS LIST

Warranty

Danfoss/ECI offers the following warranty for its products: Danfoss/ECI will correct any defect in workmanship or material for 15 months from the date of shipment from Danfoss/ECI. The corrective measures are limited to repair or replacement of the unit, which is Danfoss/ECI's option. The warranty period on TP-2 temperature sensors is three years from the date of shipment from Danfoss/ECI.

This limited warranty does not apply to equipment that has been subjected to negligence, accident, or damage by operation, maintenance, or storage or abnormal use or service. This limited warranty does not cover reimbursements for transportation, removal, installation, or repair or replacement, except as may otherwise be specifically agreed upon in writing by Danfoss/ECI.

The foregoing is in lieu of all other warranties, expressed or implied, and all other obligations or liabilities, whether arising under contract, negligence or otherwise, on the part of Danfoss/ECI. In no event shall Danfoss/ECI be liable for consequential or special damages, including, but not limited to, loss of use, loss of income, loss of profit or cost of replacement.

Trademark Information

Echelon®, LON®, and 3150® are U.S. registered trademarks of Echelon Corporation.

Belden® is a U.S. registered trademark of Belden Inc.

LONWORKS™ is a trademark of Echelon Corporation.

Demand Defrost™ is a trademark of Demand Defrost Systems.

Repair Procedure

If any part of your system requires repair, please use the following procedure:

1. Call Danfoss/ECI at 410-403-4000, ext. 3289 between 8:30 A.M. and 4:30 P.M. Eastern time for a Repair Order (R.O.) Number. ***See Important Note***

2. Have the following information ready:
   a. Purchase Order # for each unit to be repaired.
   b. As much information as possible regarding the nature of the equipment problem
   c. Serial number of unit/Date of purchase
   d. Previous repair history, if applicable

3. Send impaired item to:
   Danfoss/ECI
   10946 Golden West Drive, Suite 130
   Hunt Valley MD 21031
   See Important Note

4. The R.O. Number should be clearly marked on the outside of the shipping carton. Include all applicable paperwork with the shipment **INSIDE** the carton.

5. The warranty on repaired units is 90 days from the date of shipment from Danfoss/ECI.

***IMPORTANT NOTE**

Danfoss/ECI will be relocating to the Danfoss Inc. Air-Conditioning & Refrigeration site on or around **May, 2001**. From this time forward, direct all inquiries to :

Danfoss Inc.
Air-Conditioning & Refrigeration Division
7941 Corporate Drive
Baltimore, MD 21236-4925

Phone (410) 931-8250

Table 20: Electronic Case Controls (ECC) Replacement Parts List

Part #	Description
20030503	Handheld Terminal with Cable
20055400	DCU Repeater
20037400	DCU Controller
20037401	DCU with Bipolar Stepper Daughter board
20037402	DCU with AO, 1-10 Solid State Driver Daughter board
20037603	DCU with Single EEV Daughter board
20037604	DCU with Dual EEV Daughter board
5120045401	Stepper Daughter board
5120045409	Single EEV Daughter board
5120045404	Dual EEV Daughter board
20046410	CPM (Plate Version), w/out defrost, no transformer
20046411	CPM (Plate Version), w/out defrost, 10VA transformer
20046412	CPM (Plate Version), w/out defrost, 40VA transformer
20046420	CPM (Plate Version), w/out defrost and ASH, no transformer
20046421	CPM (Plate Version), with defrost and ASH, 10VA transformer
20046422	CPM (Plate Version), with defrost and ASH, 40VA transformer
20063410	CPM (Enclosure version), w/out defrost, no transformer
20063411	CPM (Enclosure version), w/out defrost, 10VA transformer
20063412	CPM (Enclosure version), w/out defrost, 40VA transformer
20063420	CPM (Enclosure version), with defrost and ASH, no transformer
20063421	CPM (Enclosure version), with defrost and ASH, 10VA transformer
20063422	CPM (Enclosure version), with defrost and ASH, 40VA transformer
20063440	CPM (Enclosure version), 3 phase, fused, no transformer
20063441	CPM (Enclosure version), 3 phase, fused, 10VA transformer
20063442	CPM (Enclosure version), 3 phase, fused, 40VA transformer
20037500	DCU with transformer
20037501	DCU with transformer & bipolar stepper daughter board
20037503	DCU with transformer & single EEV daughter board
20037504	DCU with transformer & dual EEV daughter board
5020047401	CPM to DCU Cable (4' length)
5020047402	CPM to DCU Cable (20' length)
5020047403	CPM to DCU Cable (15' length)
20028500	DCU Sensor (4) kit (1 each CI, CO, DA, RA TP-2 sensors)
20028600	DCU Sensor (3) kit (1 each CI, CO, DA TP-2 sensors)
27001000	(Old part # TP-2L-CI5) Coil Inlet Temperature Sensor – Blue Wire
27001100	(Old part # TP-2L-CO5) Coil Outlet Temperature Sensor – Red Wire
27001200	(Old part # TP-2L-DT5) Defrost Terminate Temperature Sensor – Orange Wire
27001300	(Old part # TP-2L-RA5) Return Air Temperature Sensor – Purple Wire
27001400	(Old part # TP-2L-DA5) Discharge Air Temperature Sensor – Green Wire
27001500	(Old part # TP-2L5) Other Applications - White Wire
TP-2LU5	Upgrade or Replacement - White Wire , 3 ft.
20057400	Handheld Access Support
20029400	DCU Installation Kit

APPENDIX C

INSTALLATION DIAGRAMS

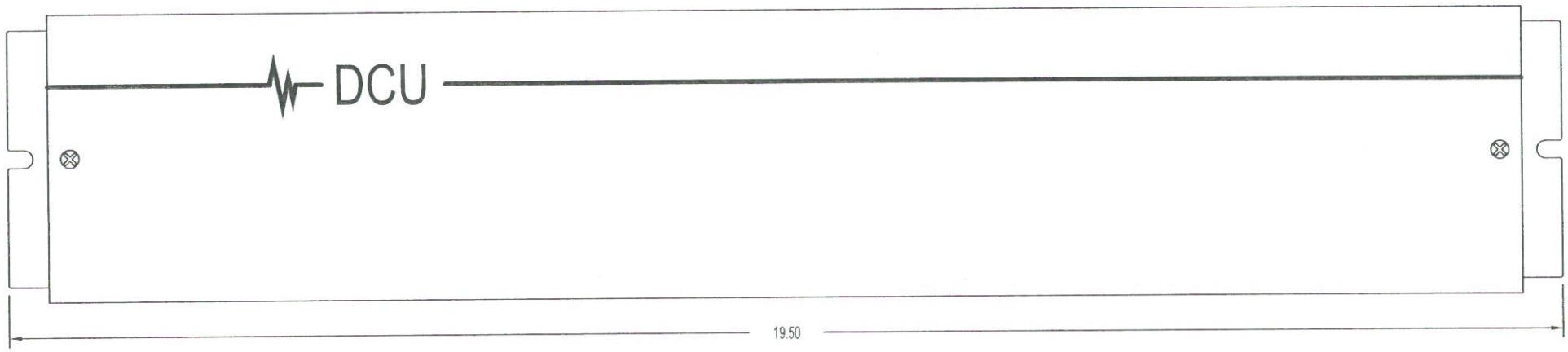

DISTRIBUTED CONTROL UNIT

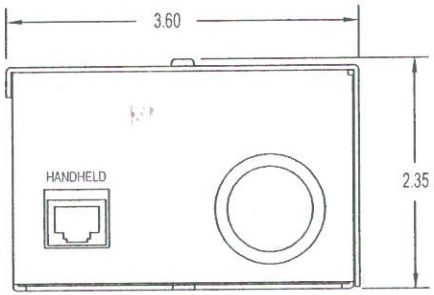

DCU LEFT END CAP VIEW

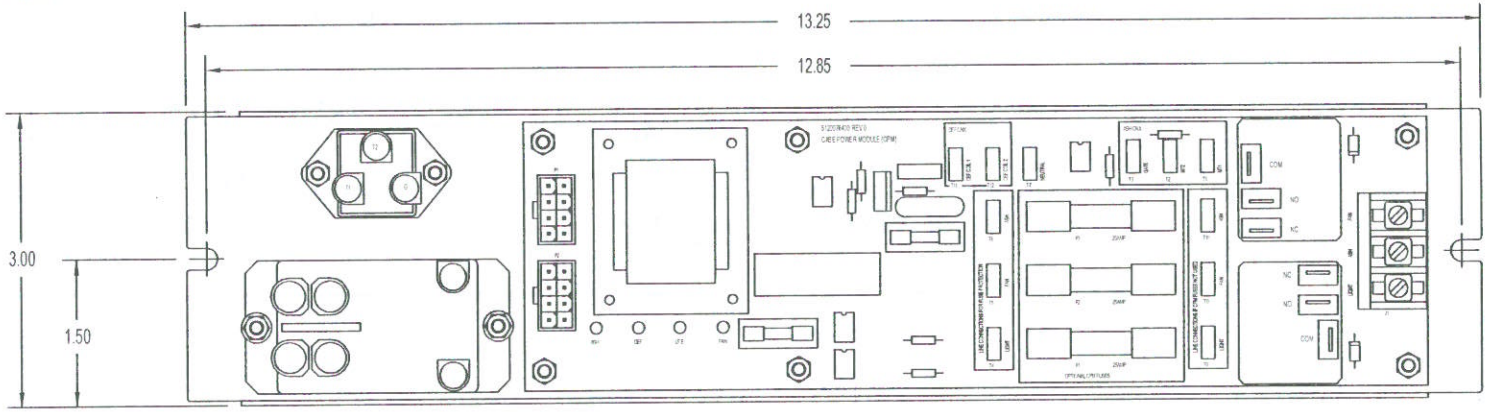

CASE POWER MODULE (CPM PLATE VERSION)

OVERALL HEIGHT OF CPM WITH WIRES IS 2.60

DIMENSIONS FOR STANDARD BOX VERSION IS 19.5 LONG x 3.4 WIDE x 2.95 HIGH.

FIGURE 1

EQUIPMENT SIZE SPECIFICATION

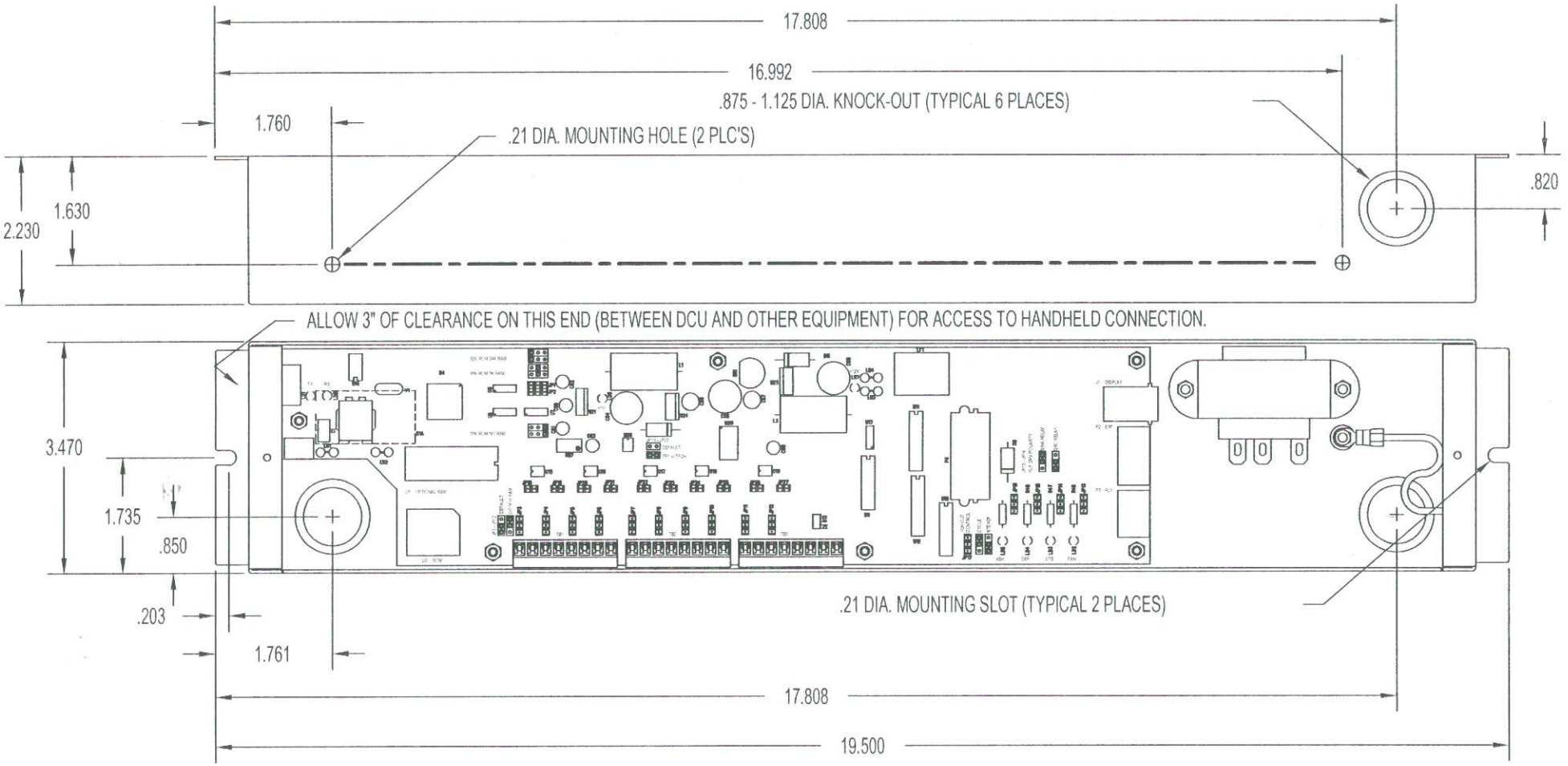

DISTRIBUTED CONTROL UNIT
SHOWN WITH OPTIONAL 24VAC TRANSFORMER

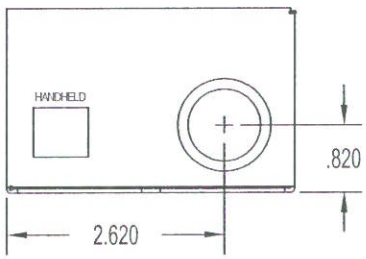

DCU LEFT END CAP VIEW

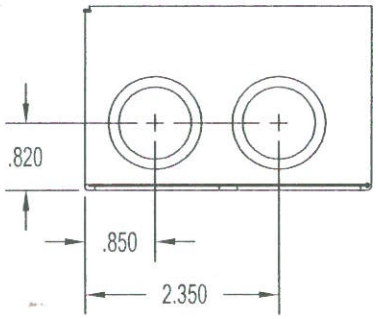

DCU RIGHT END CAP VIEW

FIGURE 2

EQUIPMENT MOUNTING SPECIFICATION

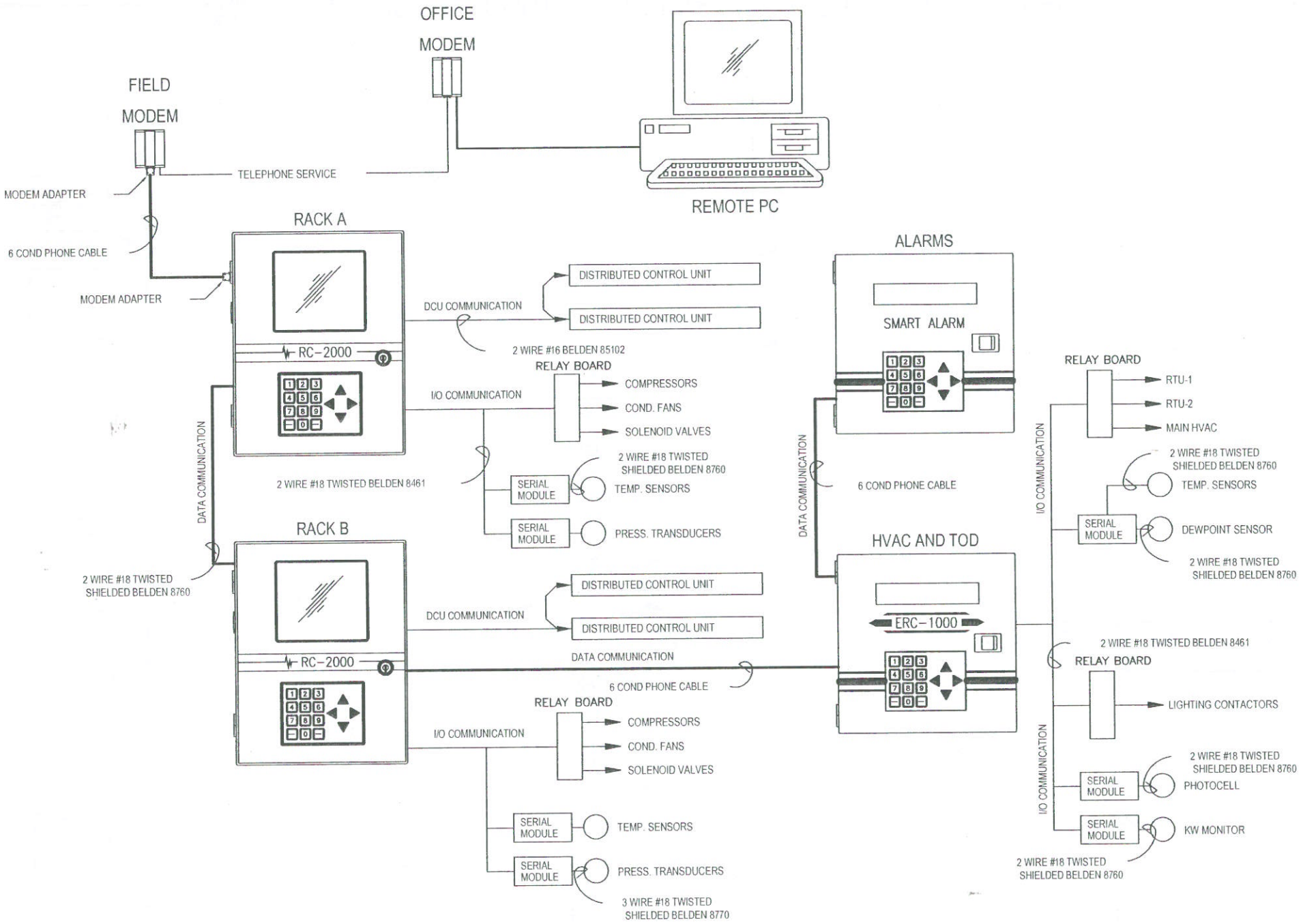

FIGURE 3

TYPICAL BLOCK DIAGRAM ENERGY MANAGEMENT SYSTEM

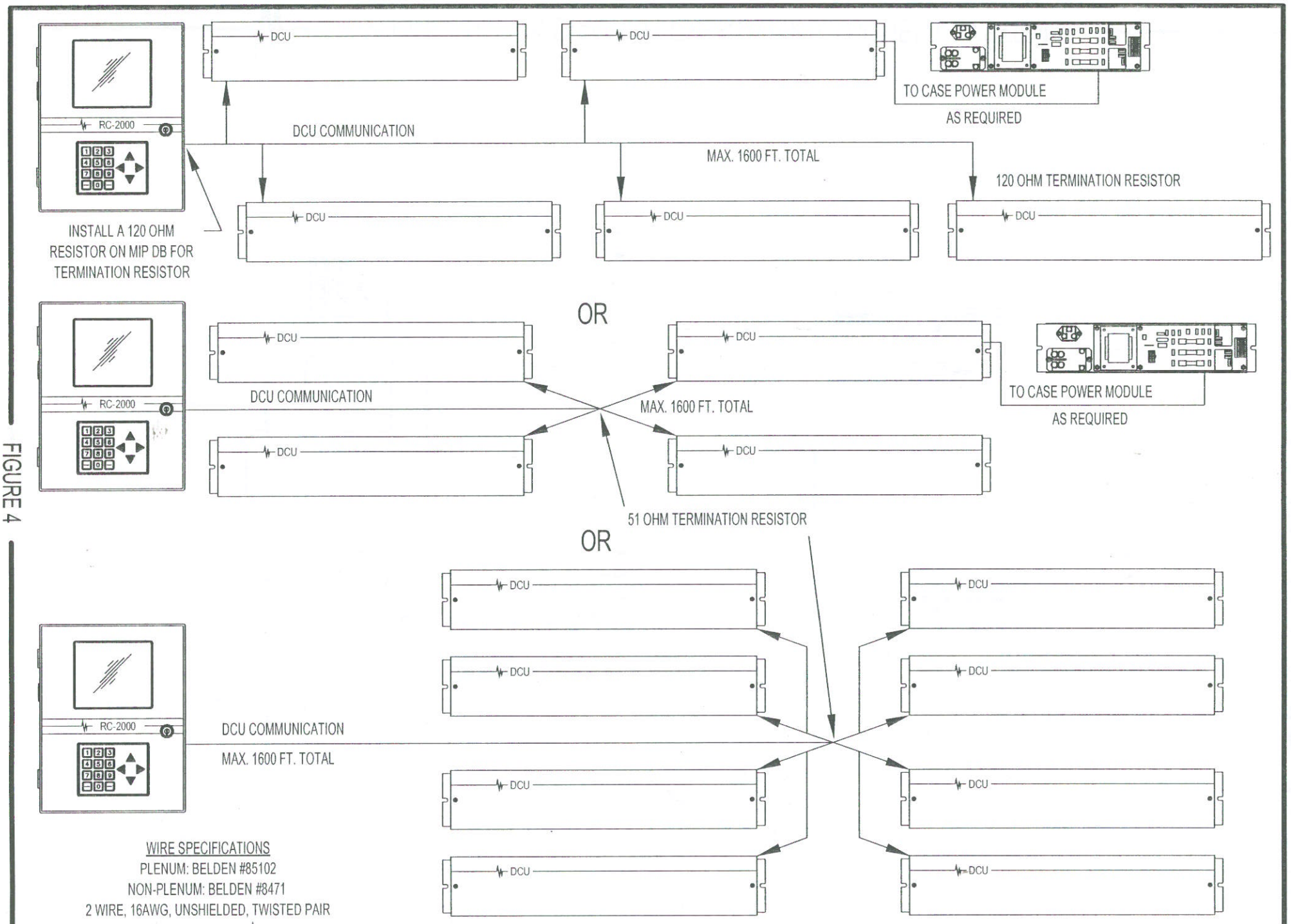

FIGURE 4

DISTRIBUTED CONTROL UNIT NETWORK CONNECTION OVERVIEW

(4464403202)

FIGURE 4A

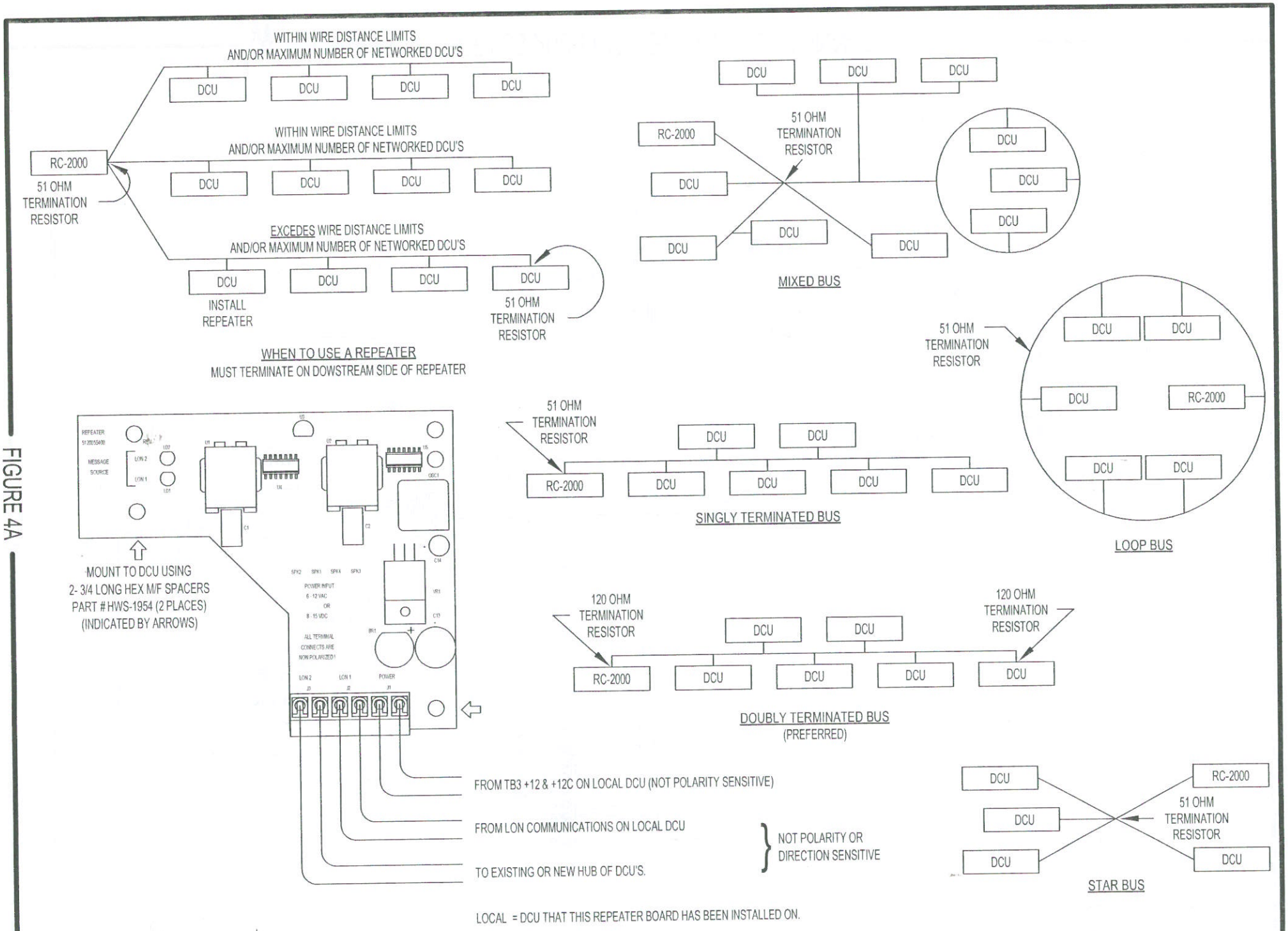

DISTRIBUTED CONTROL UNIT REPEATER CONNECTION DIAGRAM

(4464403201)

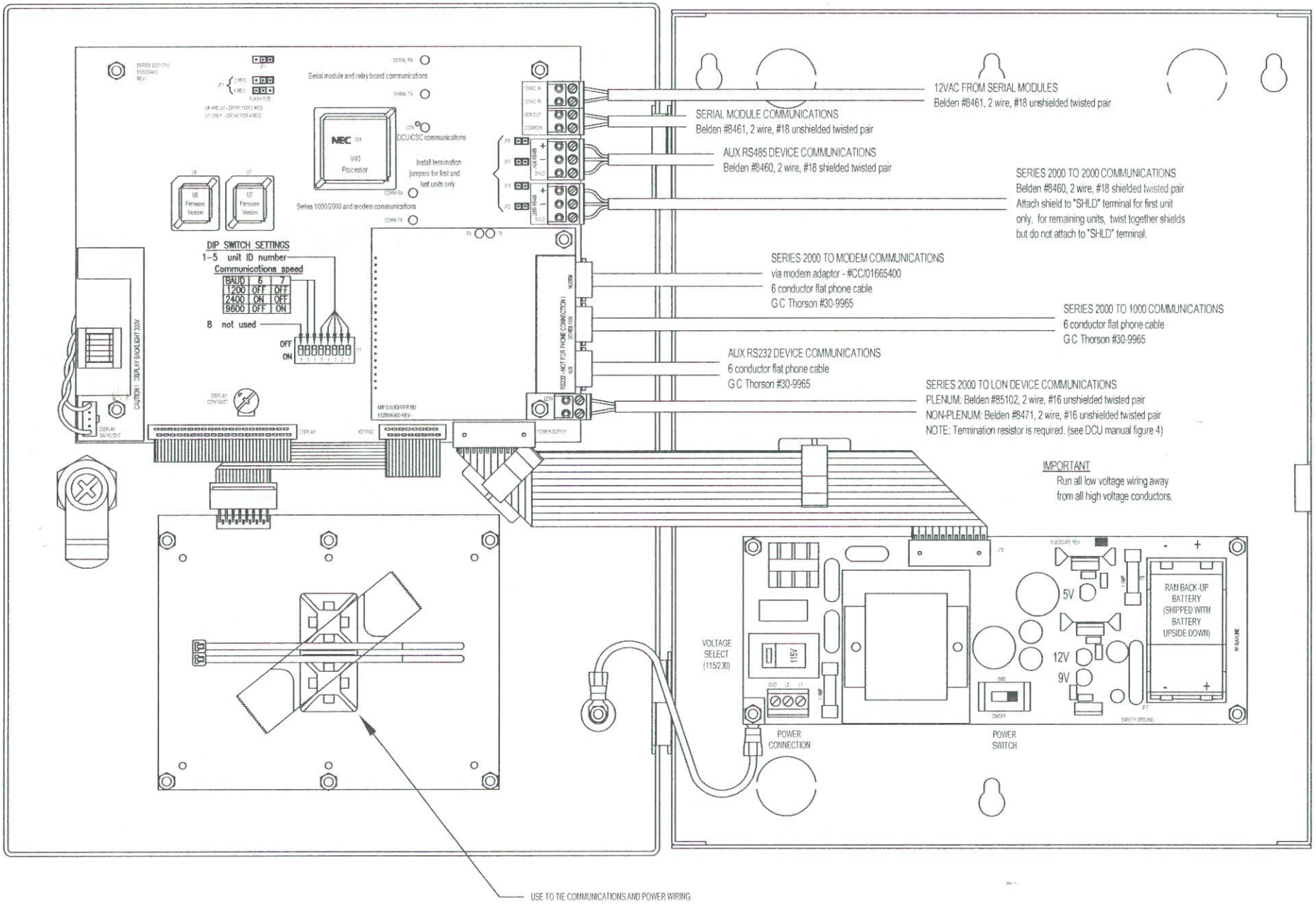

FIGURE 5

SERIES 2000 POWER AND I/O CONNECTION

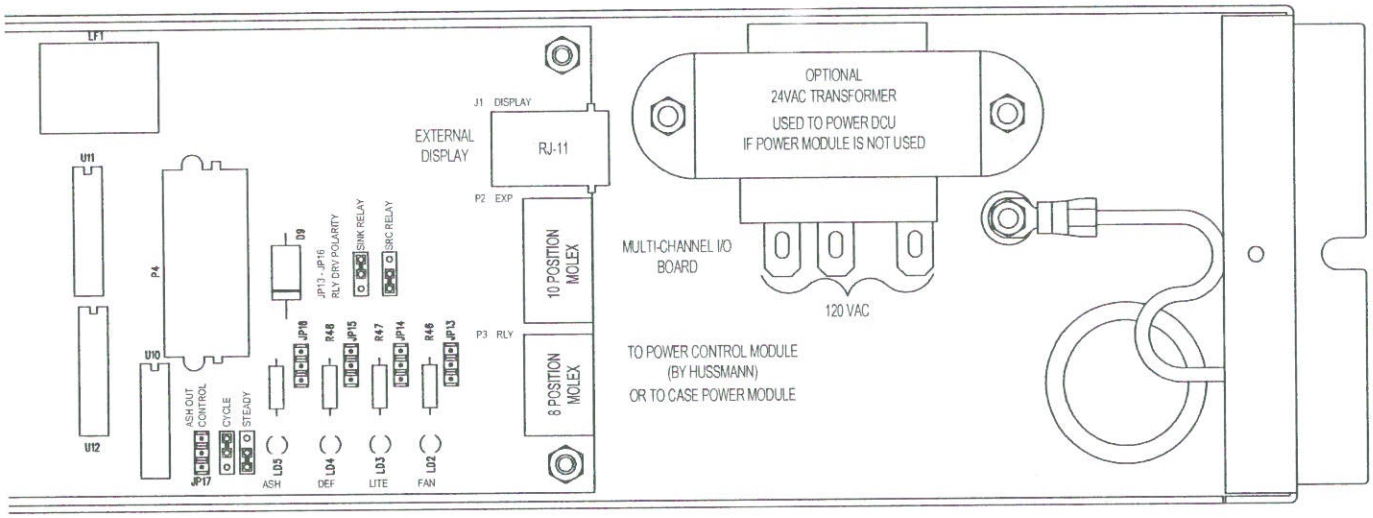

DISTRIBUTED CONTROL UNIT

SHOWN WITHOUT OPTIONAL DAUGHTER BOARD

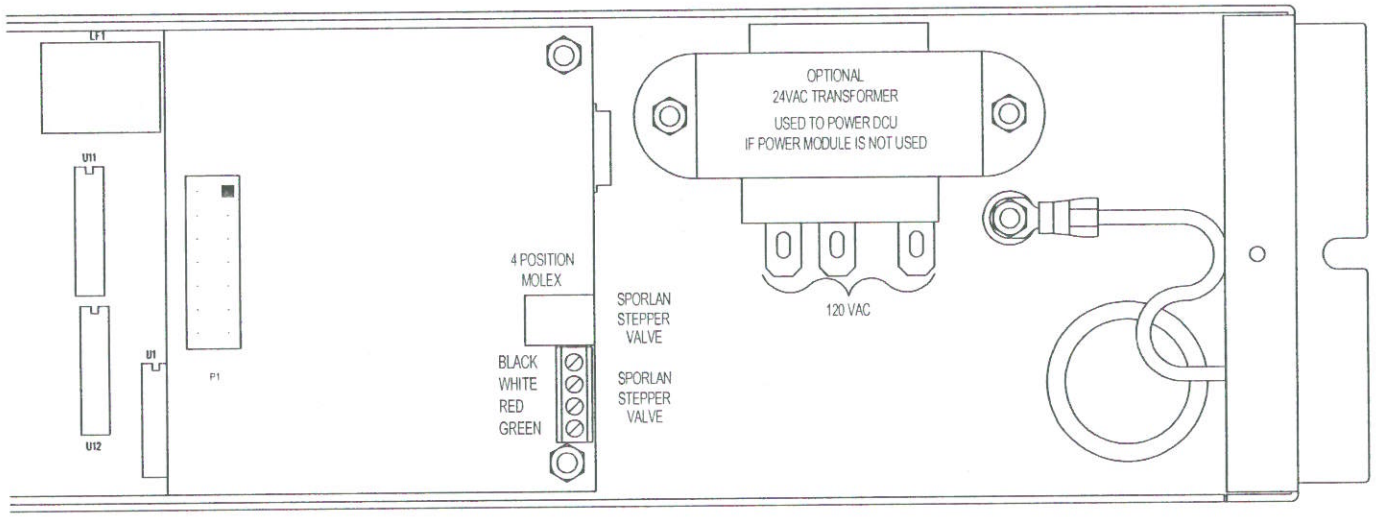

DISTRIBUTED CONTROL UNIT

SHOWN WITH OPTIONAL STEPPER EEPR DAUGHTER BOARD - P/N CC/20045401

FIGURE 6

DISTRIBUTED CONTROL UNIT OUTPUT AND POWER WIRING

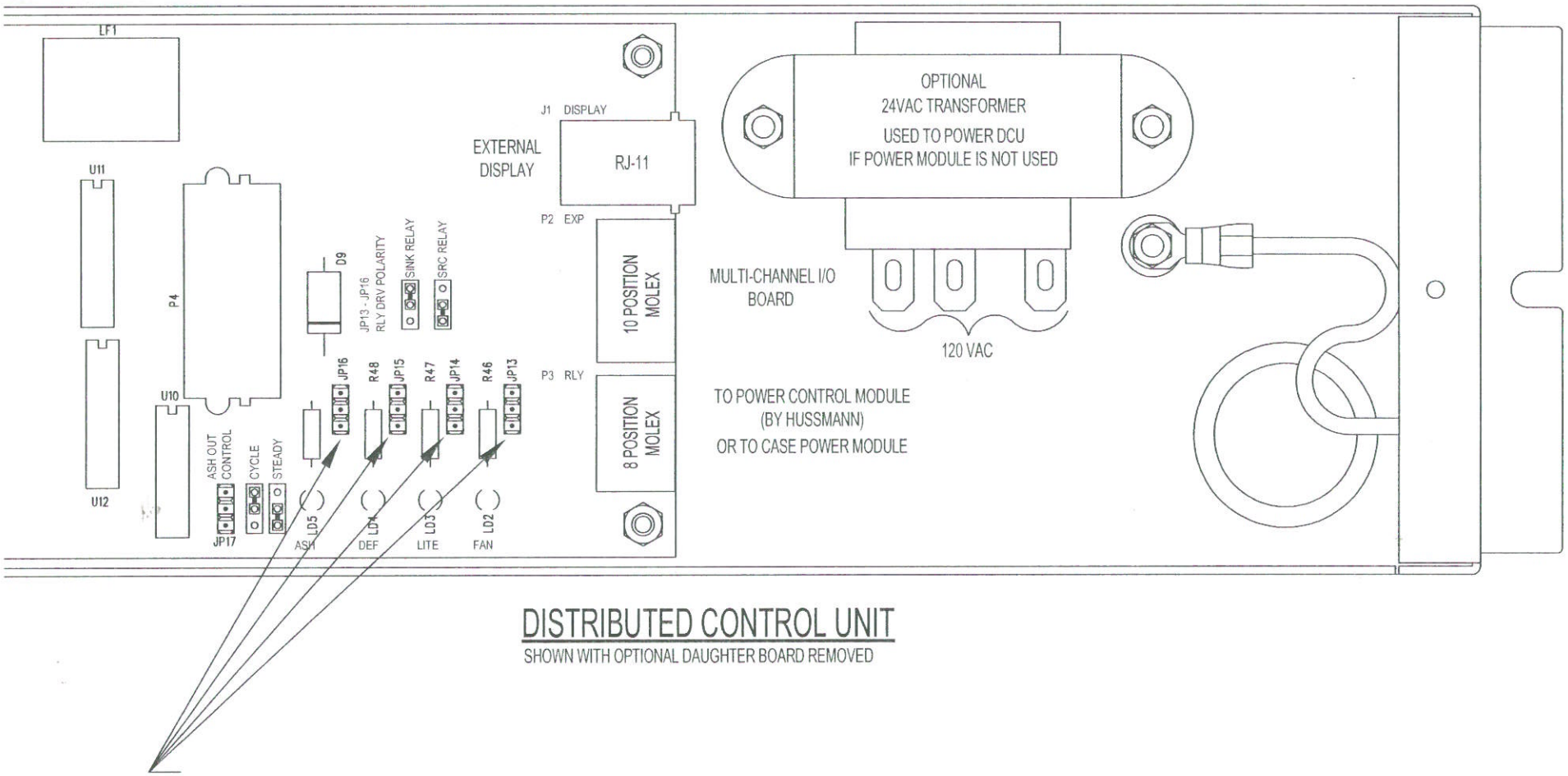

DISTRIBUTED CONTROL UNIT

SHOWN WITH OPTIONAL DAUGHTER BOARD REMOVED

THESE JUMPERS MUST BE IN THE "SRC" (SOURCE) MODE IN ORDER TO FUNCTION WITH THE 5120076400 CPM PCB ASSEMBLY

FIGURE 6A

DISTRIBUTED CONTROL UNIT OUTPUT JUMPER SETTING

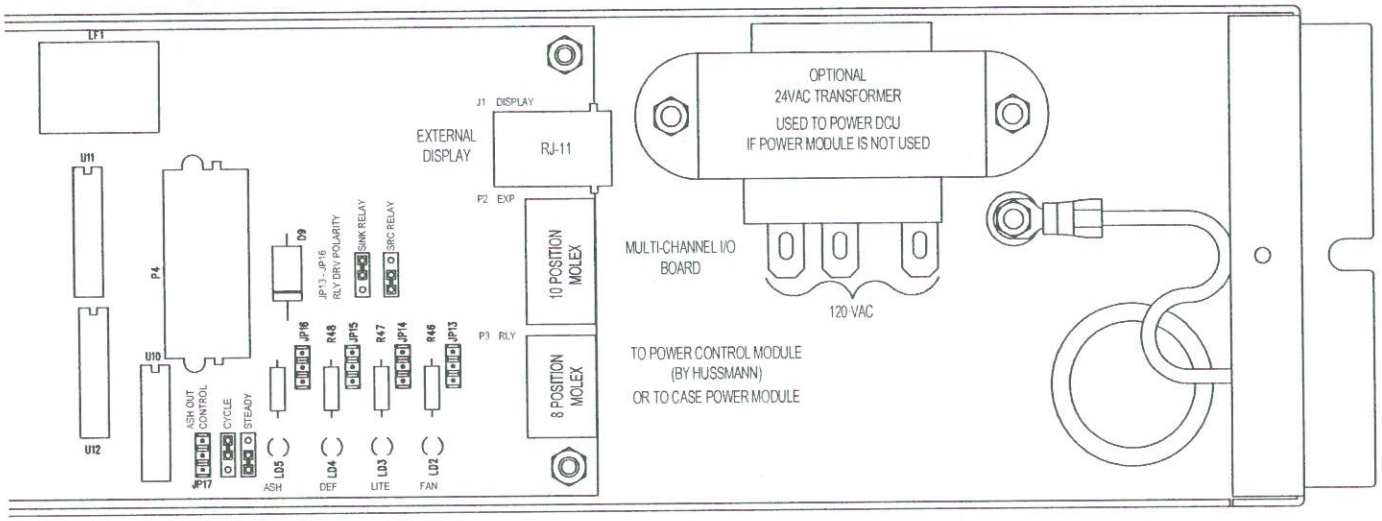

DISTRIBUTED CONTROL UNIT

SHOWN WITHOUT OPTIONAL DAUGHTER BOARD

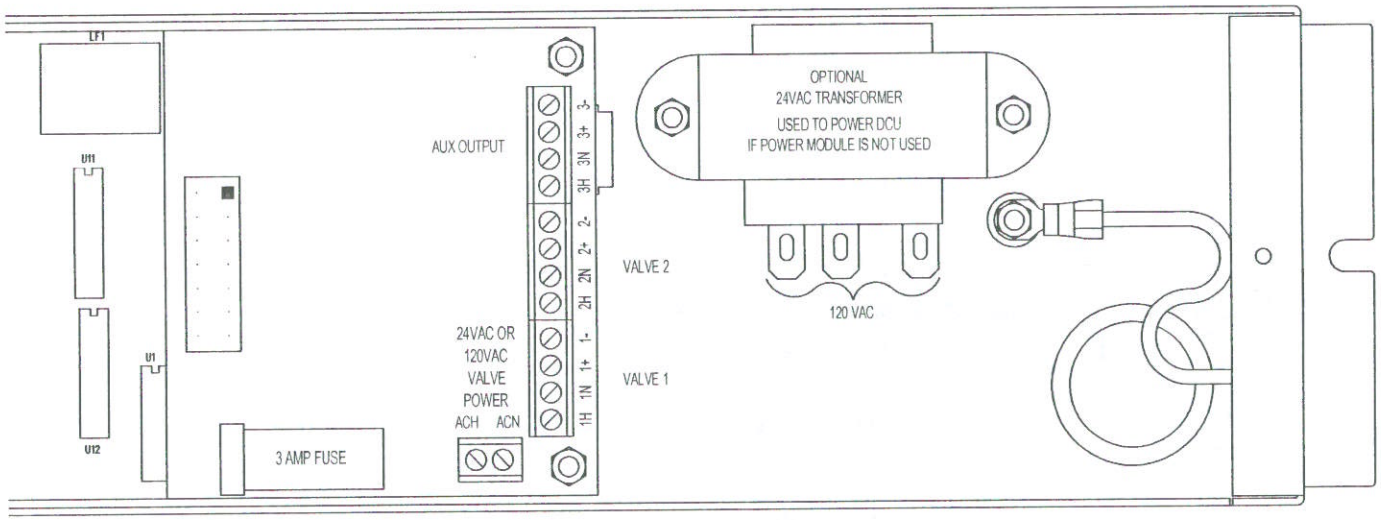

DISTRIBUTED CONTROL UNIT

SHOWN WITH OPTIONAL EEV DAUGHTER BOARD
DUAL EEV - P/N CC/20045404
SINGLE EEV - P/N CC/20045403

NOTE:

1. FOR DANFOSS 120VDC VALVE CONNECT TO "+" AND "-" TERMINALS.
2. FOR DANFOSS 24VAC VALVE CONNECT TO "H" AND "N" TERMINALS.
3. FOR ALCO 24/120VAC VALVE CONNECT TO "H" AND "N" TERMINALS.

FIGURE 7

DISTRIBUTED CONTROL UNIT OUTPUT AND POWER WIRING

FIGURE 8

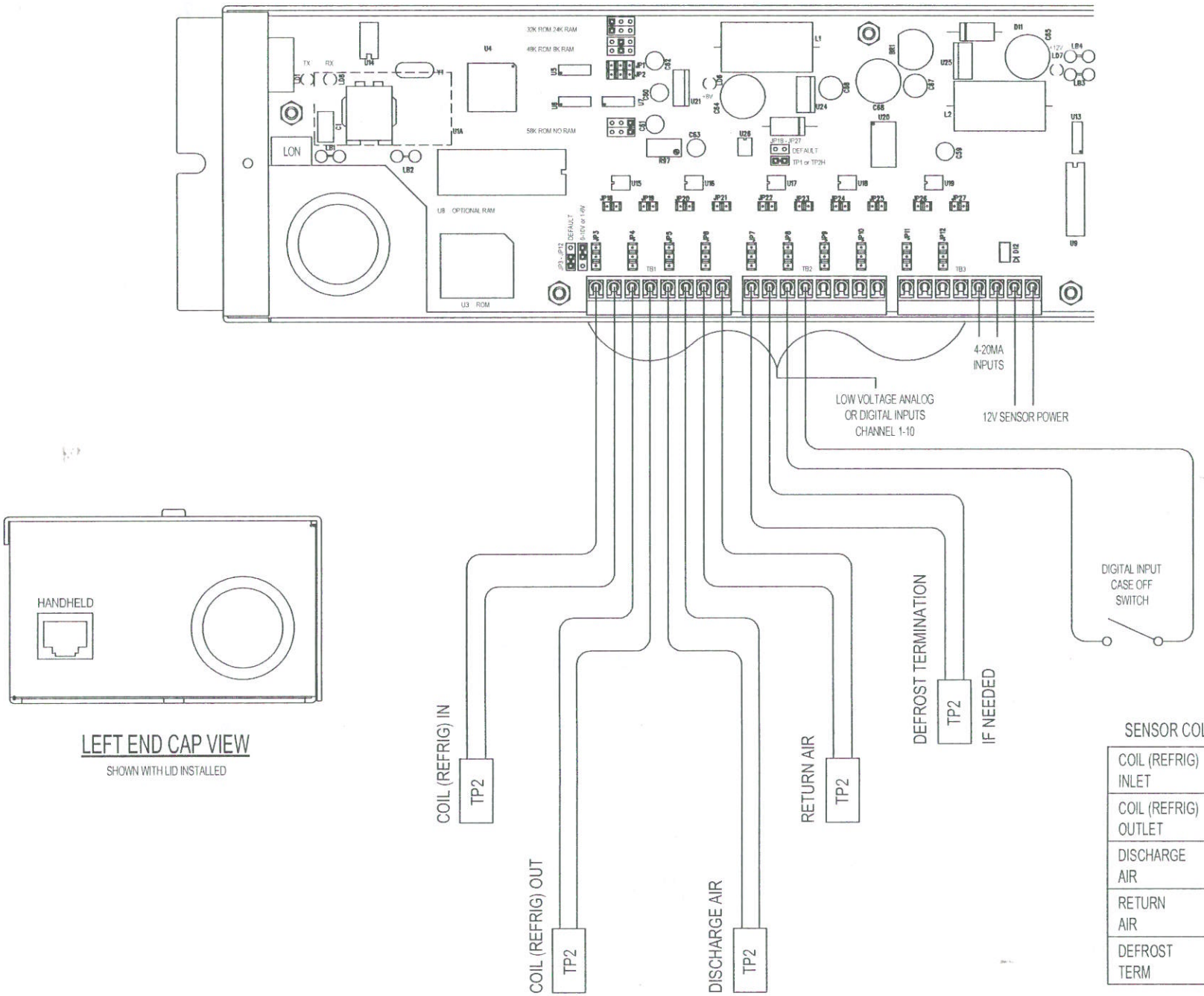

LEFT END CAP VIEW

SHOWN WITH LID INSTALLED

SENSOR COLOR CODING

COIL (REFRIG) INLET	BLUE
COIL (REFRIG) OUTLET	RED
DISCHARGE AIR	GREEN
RETURN AIR	PURPLE
DEFROST TERM	ORANGE

DISTRIBUTED CONTROL UNIT SENSOR INPUT WIRING

(4464403000)

FIGURE 8A

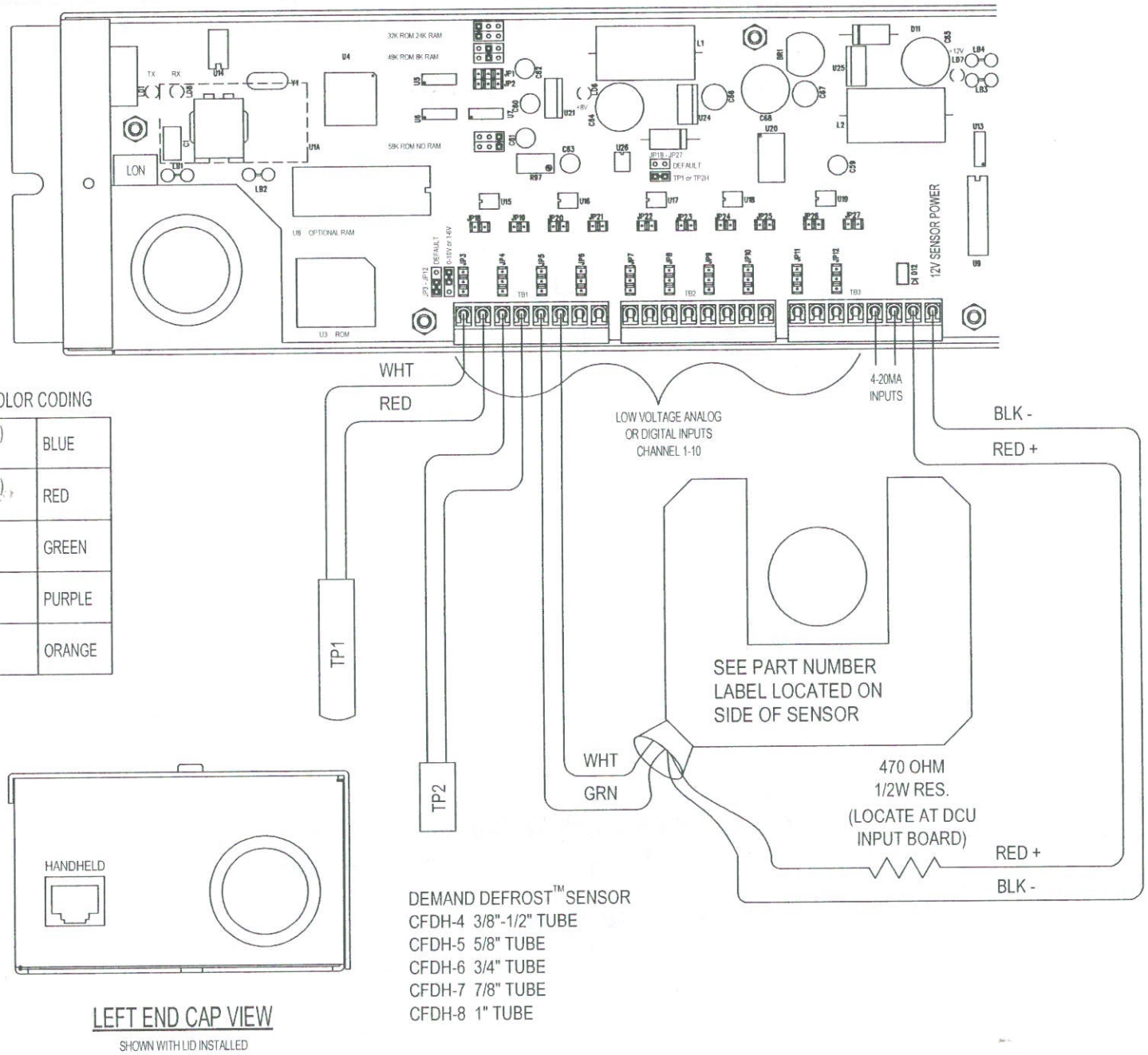

SENSOR COLOR CODING

COIL (REFRIG) INLET	BLUE
COIL (REFRIG) OUTLET	RED
DISCHARGE AIR	GREEN
RETURN AIR	PURPLE
DEFROST TERM	ORANGE

DEMAND DEFROST™ SENSOR
CFDH-4 3/8"-1/2" TUBE
CFDH-5 5/8" TUBE
CFDH-6 3/4" TUBE
CFDH-7 7/8" TUBE
CFDH-8 1" TUBE

LEFT END CAP VIEW
SHOWN WITH LID INSTALLED

DISTRIBUTED CONTROL UNIT SENSOR INPUT WIRING

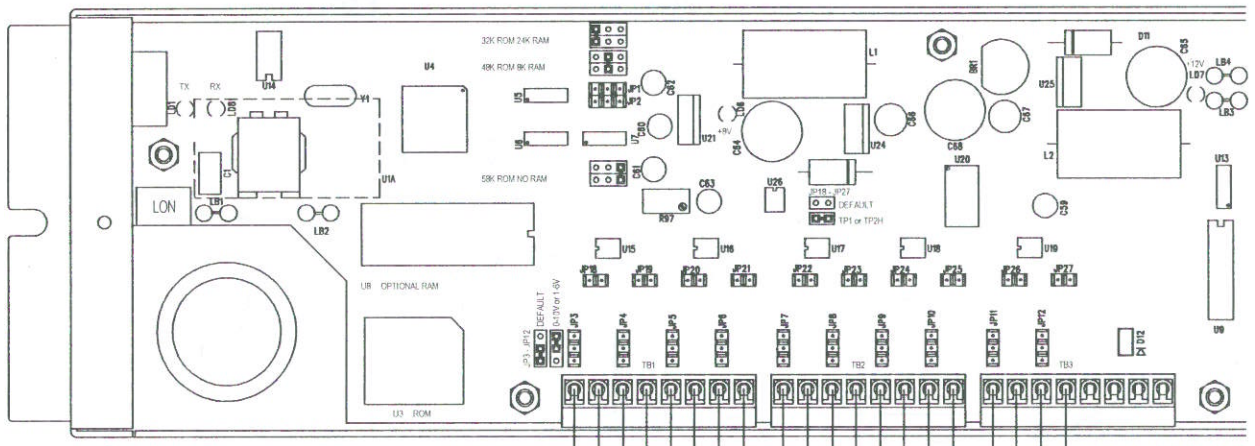

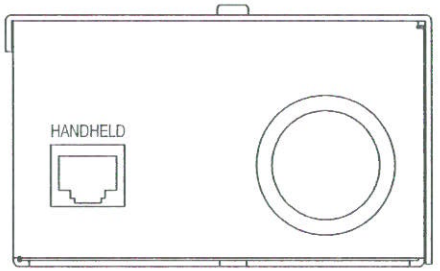

LEFT END CAP VIEW

SHOWN WITH LID INSTALLED

SENSOR COLOR CODING

COIL (REFRIG) INLET	BLUE
COIL (REFRIG) OUTLET	RED
DISCHARGE AIR	GREEN
RETURN AIR	PURPLE
DEFROST TERM	ORANGE

COIL 1 COIL (REFRIG) IN — TP2

COIL 1 COIL (REFRIG) OUT — TP2

COIL 1 DISCHARGE AIR — TP2

COIL 1 RETURN AIR — TP2

COIL 1 DEFROST TERMINATION — TP2 — IF NEEDED

COIL 2 COIL (REFRIG) IN — TP2

COIL 2 COIL (REFRIG) OUT — TP2

COIL 2 DISCHARGE AIR — TP2

COIL 2 RETURN AIR — TP2

COIL 2 DEFROST TERMINATION — TP2 — IF NEEDED

FIGURE 8B

DISTRIBUTED CONTROL UNIT DUAL COIL SENSOR INPUT WIRING

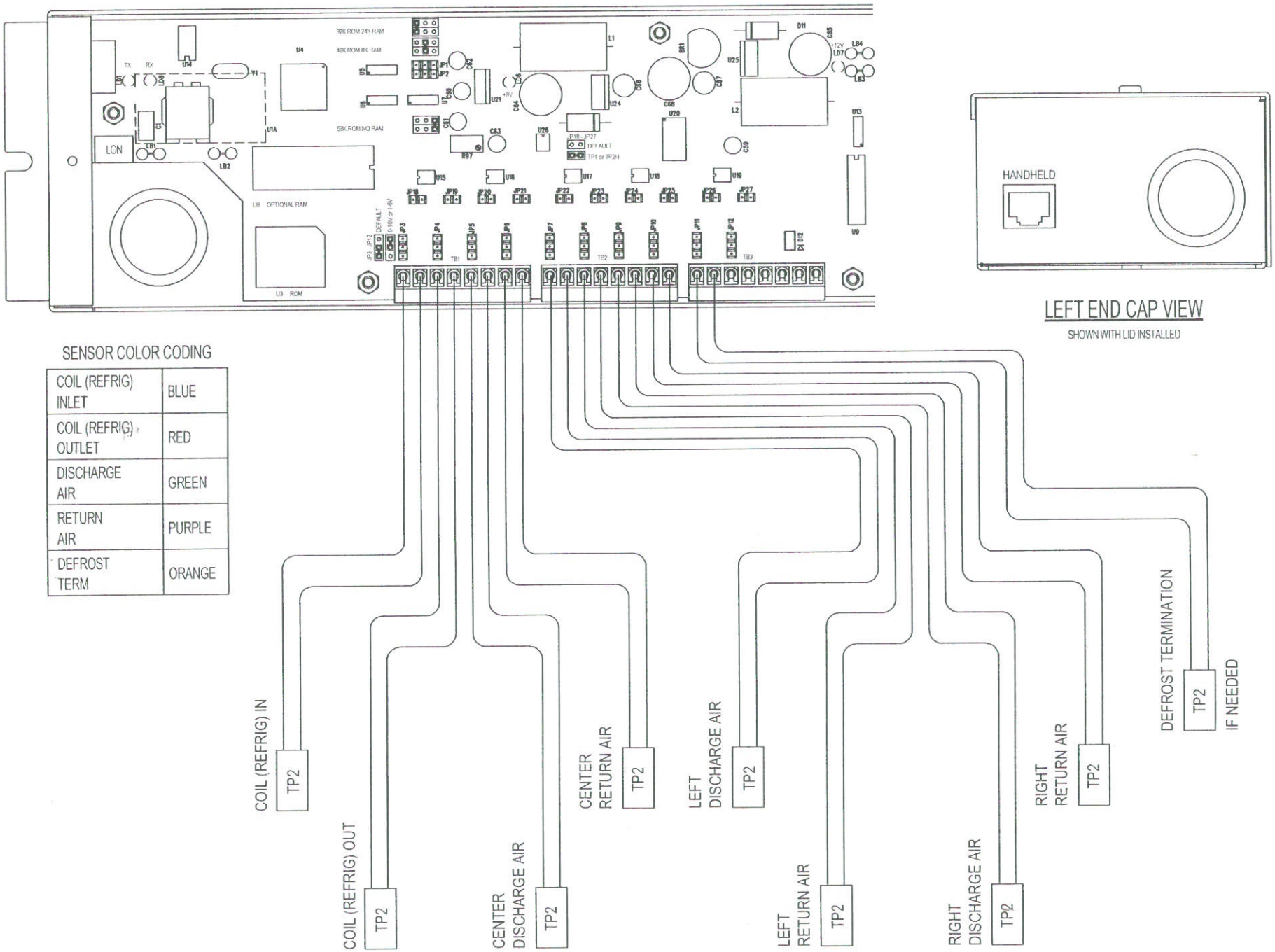

FIGURE 8C

DISTRIBUTED CONTROL UNIT MULTI COIL SENSOR INPUT WIRING

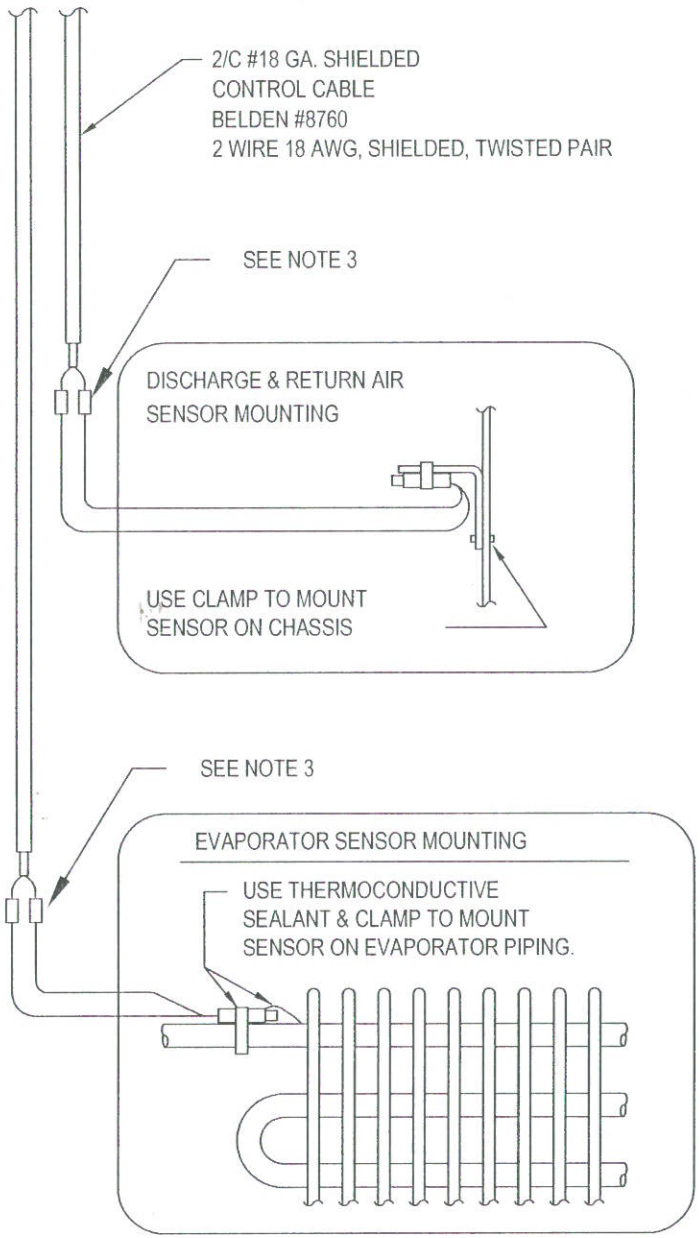

FIGURE 9

REFRIGERATION CASE

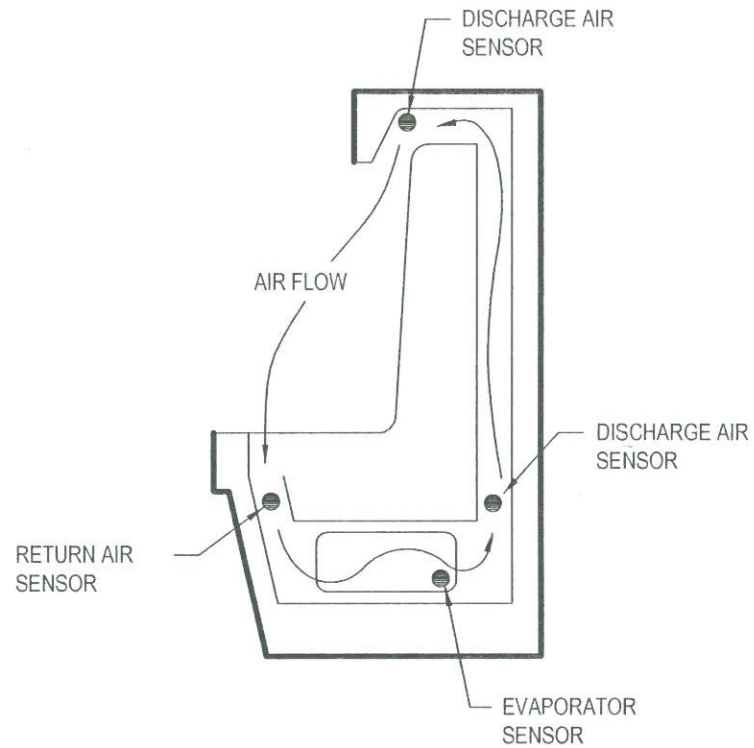

NOTES:

1.) NEVER RUN TEMPERATURE SENSOR WIRING IN THE SAME RACEWAY WITH POWER WIRING.

2.) SENSOR MUST BE LOCATED IN AIRSTREAM.

3.) MAKE CABLE CONNECTIONS OUTSIDE OF THE REFRIGERATED SPACE, SEAL TO PREVENT MOISTURE FROM CORRODING ELECTRICAL CONNECTIONS.
(FOR SPLICE CONNECTIONS PREFERABLY USE 3M- SCOTCHLOK SELF-SEALING CRIMPS)

CASE SENSOR INSTALLATION

FIGURE 10

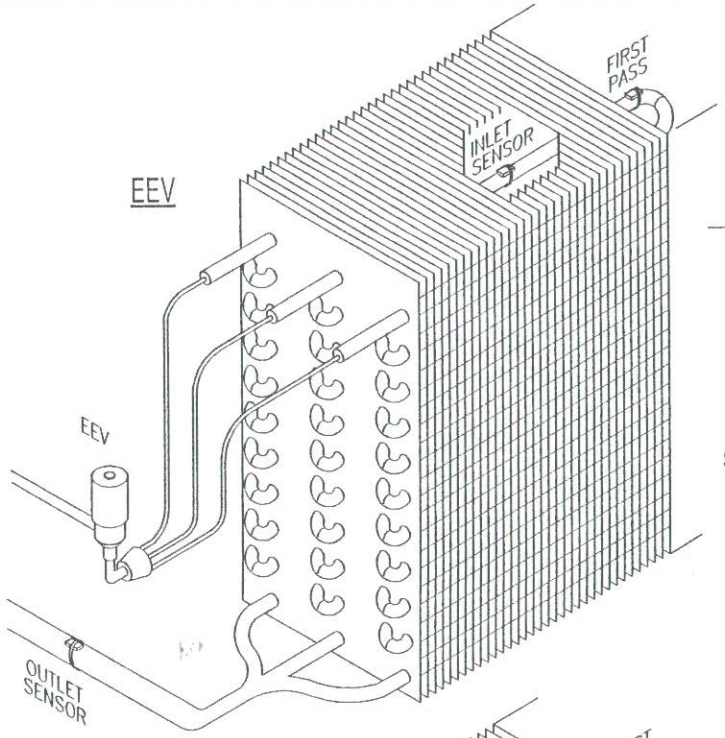

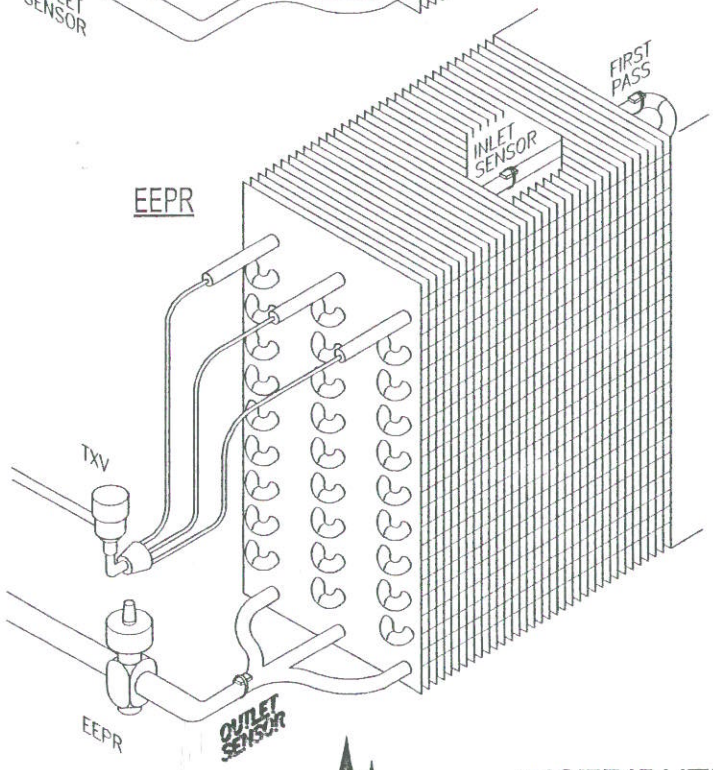

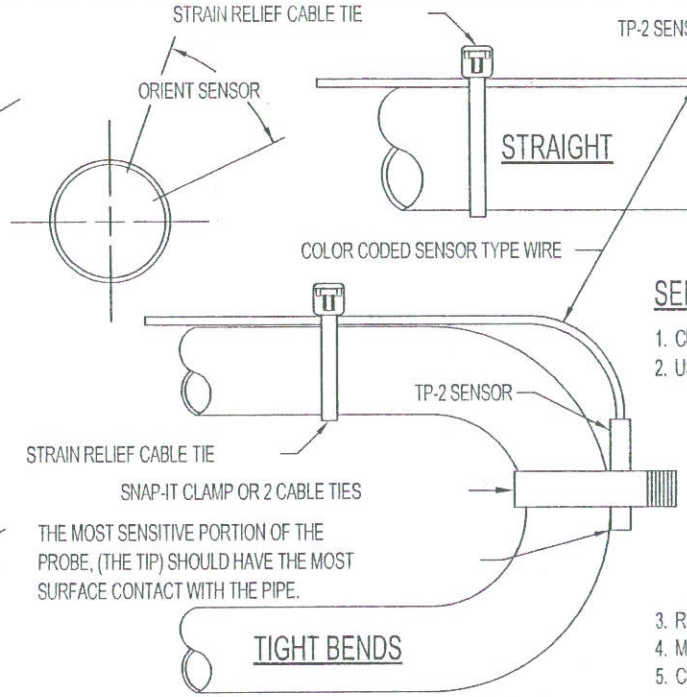

SENSOR REPLACEMENT INSTRUCTIONS

1. CLIP THE OLD SENSOR WIRES.
2. USE 3M SCOTCHLOK U1B CONNECTORS TO SPLICE THE NEW SENSOR LEADS TO THE EXISTING WIRE RUN. TO DO THIS, INSERT THE LEADS FROM THE SENSOR INTO THE CONNECTOR (DO NOT STRIP THE WIRE). INSERT THE LEADS FROM THE EXISTING RUN OF WIRE INTO THE CONNECTOR. USE PLIERS TO SQUEEZE DOWN THE BLUE TOP OF THE CONNECTOR. U1B CONNECTORS CONTAIN A SILICON COMPOUND TO MAKE THE SPLICE MOISTURE RESISTANT.
3. REMOVE THE OLD SENSOR.
4. MOUNT THE NEW SENSOR.
5. CHECK THE TEMPERATURE READING AT THE UNIT.

INSTALLATION INSTRUCTIONS:

1. OBTAIN THE TP-2 KIT AND CHECK THE CLAMP TO BE SURE IT IS THE CORRECT SIZE FOR THE PIPE THAT IT WILL BE INSTALLED ON. TWO NYLON CABLE TIES (PANDUIT PLT2M-C OR EQ.) MAY BE USED IN CASES WHERE SPACE LIMITS USE OF THE CLAMP.
2. MAKE SURE THAT THE PROBE HAS THE PROPER COLOR WIRE FOR THE APPLICATION IN WHICH THE PROBE IS BEING USED. (SEE WIRE COLOR CHART)
3. LOCATE AND ORIENT THE SENSOR ON THE PIPE AS SHOWN.
   - A. THE COIL INLET SENSOR SHOULD BE LOCATED AT LEAST 20 INCHES PAST THE LOCATION OF THE FIRST FIN OR AT THE FIRST PASS ON THE FAR END. (CONSULT CASE MANUFACTURER FOR BEST SENSING LOCATION)
   - B. THE COIL INLET SENSOR SHOULD NOT BE LOCATED ON THE DISTRIBUTOR.
   - C. THE COIL OUTLET SENSOR SHOULD BE LOCATED IN THE SAME PLACE AS THE TRADITIONAL TXV BULB LOCATION.
   - D. CLEAN LOCATION FOR SENSOR OF OXIDIZATION AND DIRT.
4. USE THE SUPPLIED CLAMP/TIE TO SECURE THE SENSOR TO THE PIPE, USE CHANNEL LOCK PLIERS TO TIGHTEN CLAMP/TIE. - DO NOT OVER TIGHTEN AS THE CLAMP/TIE MAY BREAK. BE SURE THAT CLAMP/TIE AND SENSOR DO NOT MOVE WHEN SENSOR WIRE IS PULLED AND CLAMP/TIE IS TURNED.
5. USE THE CABLE TIE TO SECURE THE TP-2 WIRE APPROXIMATELY 6 INCHES FROM TP-2 SENSOR.
6. INSULATE THE SENSOR AND CLAMP/TIE ASSEMBLY USING PERMA-SEAL.
7. ROUTE THE SENSOR WIRE TO THE SENSOR INPUT END OF DCU.
   - A. NEVER RUN SENSOR WIRING NEAR OR IN THE SAME RACEWAY AS POWER WIRING.
   - B. PROTECT WIRING WHEN GOING THROUGH OR AROUND METALWORK WITH SHARP EDGES.
   - C. IF WIRE EXTENSION IS NEEDED, USE 18AWG TWISTED PAIR.
   - D. SPLICE CONNECTIONS ARE TO BE MADE OUTSIDE OF THE REFRIGERATED SPACE. (PREFERABLY USE 3M- SCOTCHLOK U1B SELF-SEALING CRIMPS)
   - E. IF SEALING CRIMPS ARE NOT USED, SOLDER & HEAT-SHRINK TO PROTECT FROM MOISTURE & CORROSION.

WIRE COLOR CHART

COIL (REFRIG) INLET	BLUE
COIL (REFRIG) OUTLET	RED
DISCHARGE AIR	GREEN
RETURN AIR	PURPLE
DEFROST TERM	ORANGE
ALL OTHER	WHITE

DISTRIBUTED CONTROL UNIT SENSOR MOUNTING DETAIL

(4464403100)

Determine which CPM style you have prior to using Figures 11 through 17. If you purchased the CPM after July, 1998, you should have the newer, redesigned CPM. If you purchased the CPM prior to July, 1998, you have the older style CPM. Check the product label and reference the table entitled "CPM Part Number Guide" on page 5 of this manual if you are uncertain. Figures 11, 12, and 13 apply to the older style CPM. Figures 14 through 17 apply to the newer, redesigned CPM.

FIGURE 11

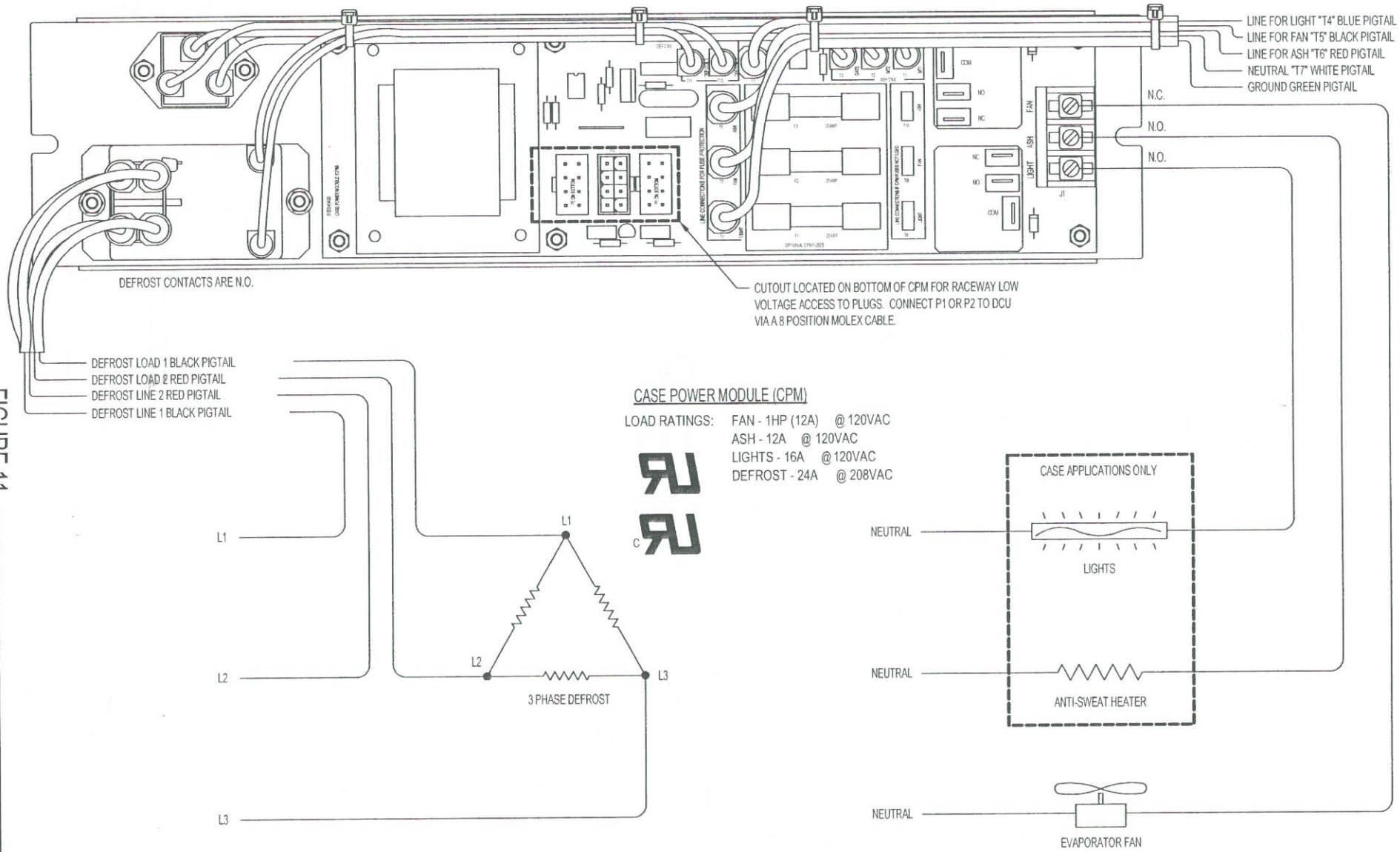

NOTE: Older Style CPM

CASE POWER MODULE LOAD CONNECTIONS

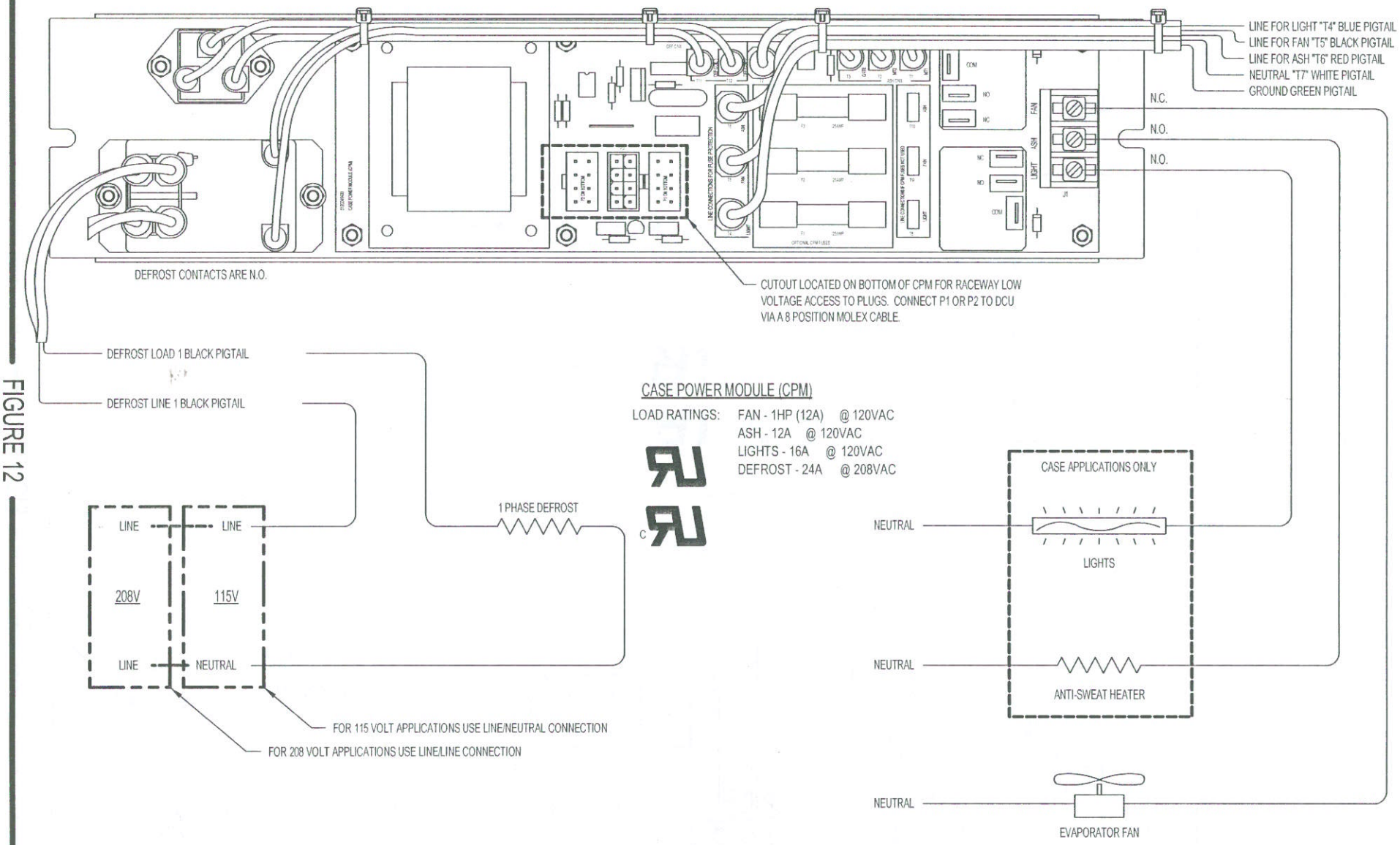

NOTE: Older Style CPM

FIGURE 12

CASE POWER MODULE LOAD CONNECTIONS

FIGURE 13

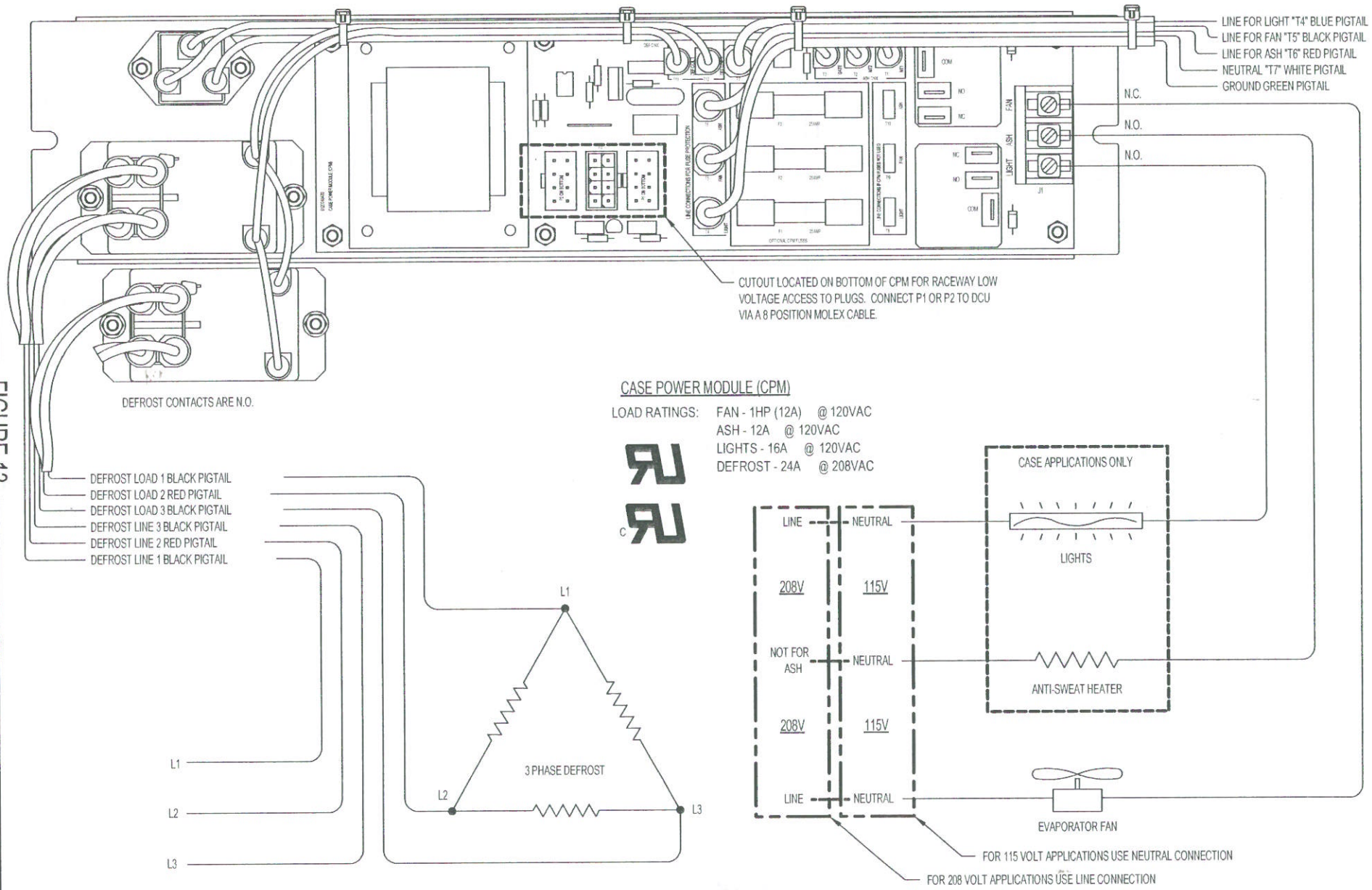

NOTE: Older Style CPM

CASE POWER MODULE LOAD CONNECTIONS

LOAD RATINGS: FAN - 1HP (12A) @ 120VAC
ASH - 12A @ 120VAC
LIGHTS - 13A @ 120VAC
DEFROST - 24A @ 208VAC

Defrost contacts are normally open

L1
3 phase defrost
L2
L3
(red) load 3 for defrost
(black) load 2 for defrost
(red) load 1 for defrost

optional transformer
3 AMP
4 AMP
ASH
DEF
LITE
FAN
do not connect directly to this relay!
do not connect directly to this relay!
N.C.
N.O.
N.O.
Connect to DCU via a 8 position MOLEX cable.

CASE POWER MODULE (CPM)

208V	115V
LINE	Neutral
NOT FOR ASH	Neutral
208V	115V
LINE	Neutral

Case applications only
Lights
Anti-Sweat Heater
must have a CPM with defrost to control this load.
Evaporator fan

FOR 115 VOLT APPLICATIONS USE NEUTRAL CONNECTION
FOR 208 VOLT APPLICATIONS USE LINE CONNECTION

(white) neutral "T7"
(orange) line for ash "T6"
(brown) line for fan "T5" (powers CPM)
(blue) line for light "T4"
(green) ground
(red) line 1 for defrost
(black) line 2 for defrost
(red) line 3 for defrost

CASE POWER MODULE LOAD CONNECTIONS W/3 PHASE DEFROST

FIGURE 14

FIGURE 15

LOAD RATINGS: FAN - 1HP (12A) @ 120VAC
ASH - 12A @ 120VAC
LIGHTS - 13A @ 120VAC
DEFROST - 24A @ 208VAC

Caution:
This method of defrost wiring only brakes 2 legs of the delta defrost load. Please consult your local codes.

Defrost contacts are normally open

L1
L2
L3
3 phase defrost
(black) load 2 for defrost
(red) load 1 for defrost

optional transformer
3 AMP
4 AMP
ASH
DEF
LITE
FAN
do not connect directly to this relay!
do not connect directly to this relay!
N.C.
N.O.
N.O.
FAN
ASH
LIGHT
Connect to DCU via a 8 position MOLEX cable.

CASE POWER MODULE (CPM)

(white) neutral "T7"
(orange) line for ash "T6"
(brown) line for fan "T5" (powers CPM)
(blue) line for light "T4"
(green) ground
(red) line 1 for defrost
(black) line 2 for defrost

Case applications only
Lights
Neutral
Anti-Sweat Heater
Neutral
must have a CPM with defrost to control this load.
Neutral
Evaporator fan

CASE POWER MODULE LOAD CONNECTIONS W/3 PHASE DEFROST

LOAD RATINGS: FAN - 1HP (12A) @ 120VAC
ASH - 12A @ 120VAC
LIGHTS - 13A @ 120VAC
DEFROST - 24A @ 208VAC

TRIAC P/N: 17-110

TRIAC WIRING:

Yell org. Blue

optional transformer

3 AMP

4 AMP

ASH DEF LITE FAN

do not connect directly to this relay!

do not connect directly to this relay!

N.C.

N.O.

N.O.

Connect to DCU via a 8 position MOLEX cable.

CASE POWER MODULE (CPM)

(white) neutral "T7"

(orange) line for ash "T6"

(brown) line for fan "T5" (powers CPM)

(blue) line for light "T4"

(green) ground

(red) line 1 for defrost

208V	115V
LINE	Neutral
NOT FOR ASH	Neutral
208V	115V
LINE	Neutral
208V	115V
LINE	Neutral

Case applications only

Lights

Anti-Sweat Heater

must have a CPM with defrost to control this load.

Evaporator fan

1 PHASE DEFROST

(red) load 1 for defrost

Defrost contacts are normally open

FOR 115 VOLT APPLICATIONS USE NEUTRAL CONNECTION

FOR 208 VOLT APPLICATIONS USE LINE CONNECTION

FIGURE 16

CASE POWER MODULE LOAD CONNECTIONS W/SINGLE PHASE DEFROST

FIGURE 17

LOAD RATINGS: FAN - 1HP (12A) @ 120VAC
ASH - 12A @ 120VAC
LIGHTS - 13A @ 120VAC
DEFROST - 24A @ 208VAC

Defrost contacts are normally open

L1
L2
L3
3 phase defrost
(black) load 2 for defrost
(red) load 1 for defrost

do not connect directly to this relay!
do not connect directly to this relay!
N.C.
N.O.
N.O.
FAN
ASH
LIGHT
ASH
DEF
LITE
FAN
3 AMP
4 AMP
Connect to DCU via a 8 position MOLEX cable.

CASE POWER MODULE

(white) neutral "T7"
(orange) line for ash "T6"
(brown) line for fan "T5" (powers CPM)
(blue) line for light "T4"
(green) ground
(red) line 1 for defrost
(black) line 2 for defrost

OPTIONAL
EXTERNAL TRANSFORMER
VA RATING DEPENDS ON
VALVE REQUIREMENTS

Case applications only
Lights
Anti-Sweat Heater
must have a CPM with defrost to control this load.
Neutral
Neutral
Neutral
Evaporator fan

CASE POWER MODULE LOAD CONNECTIONS W/EXTERNAL TRANSFORMER

Index

A

alarm 1-4 *38*
alarm delay *36*
anti-sweats during defrost *33*
ASH Hi *35*
ASH in high temp alarm *33*
ASH Lo *35*
ASH period *37*
aux refrig ctrl *31*
aux relay *32*

C

case alarm relay *28*
case control programming *27–45*
  case control master config screen
    case alarm relay *28*
    dew point sensor *28*
    light on times *28*
  case control names screen *29*
  case control setpoints screen *35*
  case control setup screen *30*
    anti-sweats during defrost *33*
    ASH in high temp alarm *33*
    aux refrig ctrl *31*
    aux relay *32*
    case with interlock open *33*
    defrost schedule type *32*
    evp fan dly *32*
    fan during defrost *33*
    fans with interlock open *34*
    interlock open alarm *34*
    intlk switch *33*
    lights during defrost *33*
    lights in high temp alarm *33*
    lights with interlock open *34*
    refrig with interlock open *33*
    refrigeration control *30*
    step rate *32*
    stepper drive valve hardware *32*
  case control status screen *40*
    case outputs/overrides *41–42*
    case setpoints/sensor readings *41*
    case state *40*
  case setup screen
    defrost termination *32*
  master config screen *28*
    number of cases *28*
  menu *27*
CASE OFF *46*
case outputs/overrides (case status) *41–42*
case power module *5–10*
case power module (CPM) *1*
case setpoints
  ASH Hi *35*
  ASH Lo *35*
  cut in *35*
  cut out *35*
  defrost term setpoint *35*
  delays and durations
    alarm delay *36*
    ASH period *37*
    defrost duration *36*
    defrost min on time *36*
    intlk on time *36*
    refrig off time *36*
    runoff time *36*
  evap TD *35*
  high and low alarms *35*
  light on times *37*
  offsets for low temp *36*
  offsets for medium temp *36*
  offsets for second evap *36*
  sensors and digital inputs
    alarm 1-4 *38*
    DchCtrl *38*
    DchMon *38*
    def term1-4 *38*
    intlk sw *38*
    rack number *38*
    Refr In *37*
    Refr Out *37*
    RtnCtrl *38*
    RtnMon *38*
    SpcCtrl *38*
    SpcMon *38*
  time settings
    copy master schedule now? *37*
    defrost start times *37*
case setpoints/sensor readings (case status) *41*
case state *40*
case with interlock open *33*
check node function *24*
check node troubleshooting *52*
communication problems *48*
configure node function *23*
connections
  inputs *3*
control *38*
control problems *48*
copy master schedule now? *37*

CPM *3*
enclosure type *7*
fuse protection *10*
line power connections *9*
load connections *9*
three phase defrost *9*
transformer options *8*
CPM basic wiring scheme *6*
CPM hardware specifications *7*
CPM load voltage checks *50*
CPM mounting considerations *12*
CPM to DCU connection *10*
cut in *35*
cut out *35*

D
Danfoss/ECI Control System *2*
daughter boards *4*
DchCtrl *38*
DchMon *38*
DCU LED status *50*
DCU to CPM connection *10*
DCU/CPM mounting *8*
DCU-Echelon communications troubleshooting *49*
def term1-4 *38*
default setpoints/high temperature sensors *35*
default setpoints/low temperature sensors *35*
defrost *7*
defrost duration *36*
defrost min on time *36*
defrost schedule type *32*
defrost start times *37*
defrost term setpoint *35*
defrost termination *32*
dew point sensor *28*
doubly terminated configuration *20*

E
Echelon communications *16–21*
Echelon network
physical connection guidelines *19*
Echelon network specifications
doubly terminated daisy chain network *19*
FTT-10 star configuration *17*
Echelon network termination *16*
EEPR valve connections *15*
EEV requirements (sensor) *15*
EEV valve operation and safeties *43*
electronic evaporator pressure regulator (EEPR) *1*
EMRG DEFR *46*
EMRG REFR *46*
evp fan dly *32*

F
fan during defrost *33*
fans with interlock open *34*
fault conditions/safeties
high pressure safety *45*
invalid suction temperature *45*
phase loss safety *45*
sensor fault condition *45*
FTT-10 repeater board *21*
FTT-10 star configuration *18*
fuse protection (CPM) *10*

H
HANDHELD *46*
handheld *3*
handheld problems *48*
handheld programming basics *46*
handheld programming options
main menu *47*
handheld special function keys *46*
handheld vs direct programming *47*
hardware overview *3–4*
high and low alarms *35*
high pressure safety *45*

I
ID procedure *22*
ID Tables *52*
input sensor hookup *13*
inputs *1*
install code function *23*
install code troubleshooting *51*
install node function *22*
install nodes troubleshooting *51*
interlock open alarm *34*
intlk on time *36*
intlk sw *38*
intlk switch *33*
invalid suction temperature *45*

J
jumper configurations for mother board *56*

L
light ON times *37*
light on times *28*
lights during defrost *33*
lights in high temp alarm *33*
lights with interlock open *34*
line power connections (CPM) *9*
line-up control *1*
line-up control configuration *10*

load connections (CPM) *9*
LON *3*

M
main board *3*
micro-controller *3*
mother board jumper configurations *56*
mounting
    DCU/CPM *8*
mounting considerations *11*

N
NORMAL OP *46*
number of cases *28*

O
offsets for low temp *36*
offsets for medium temp *36*
offsets for second evap *36*
override pull down feature *44*

P
phase loss safety *45*
power *3*
power troubleshooting *50*
pulse-type electronic expansion valve *1*

R
rack number *38*
RC-2000
    check node function *24*
    configure node function *23*
    install code function *23*
    install node function *22*
    remove node function *25*
    setpoint node to RC function *26*
    setpoint to node function *26*
    show node function *24*
RC-2000 alarms troubleshooting *49*
RC-2000/DCU quick reference guide *58*
Refr In *37*
Refr Out *37*
refrig off time *36*
refrig with interlock open *33*
refrigeration control selections *30*
refrigeration valve connections *15*
refrigeration valves
    solenoid *1*
relay board *3*
remove node function *25*
RtnCtrl *38*
RtnMon *38*
runoff time *36*

S
sensor fault condition *45*
sensor installation instructions *14*
sensor replacement *14*
setpoint node to RC function *26*
setpoint to node function *26*
show node function *24*
single branch daisy chain configuration *20*
singly terminated configuration *18*
singly terminated network *18*
software troubleshooting *51*
SpcCtrl *38*
SpcMon *38*
start up *22*
step rate *32*
stepper drive valve hardware *32*

T
three phase defrost *9*
TP-2 sensor *13*
TP-2 sensor temp resistance *57*
TP2L Ohms-Volts Conversion *53*
transformer options *7*
troubleshooting *48*
    CPM load voltage checks *50*
    DCU LED status *50*
    DCU-Echelon communications *49*
    power *50*
    RC-2000 alarms *49*
    software *51*
        check node *52*
        install code *51*
        install nodes *51*

U
unpacking *11*

V
valve operation sequence *43*
valve problems *48*
valves *1*

W
walk-in cooler mounting considerations *12*

10946 Golden West Drive
Suite 130
Hunt Valley, MD 21031
Telephone (410) 403-4000
Fax (410) 584-2664
Internet www.ecintl.com

Subsequent to May 2001:

Danfoss Inc.
Air-Conditioning & Refrigeration Division
7941 Corporate Drive
Baltimore, MD 21236-4925
Telephone (410) 931-8250
Fax (410) 931-8256
Internet www.danfoss.com

Subject to change without notice • Printed in the U.S.A.