IRIS
(Infrared Refrigerant Information System)
Installation Manual

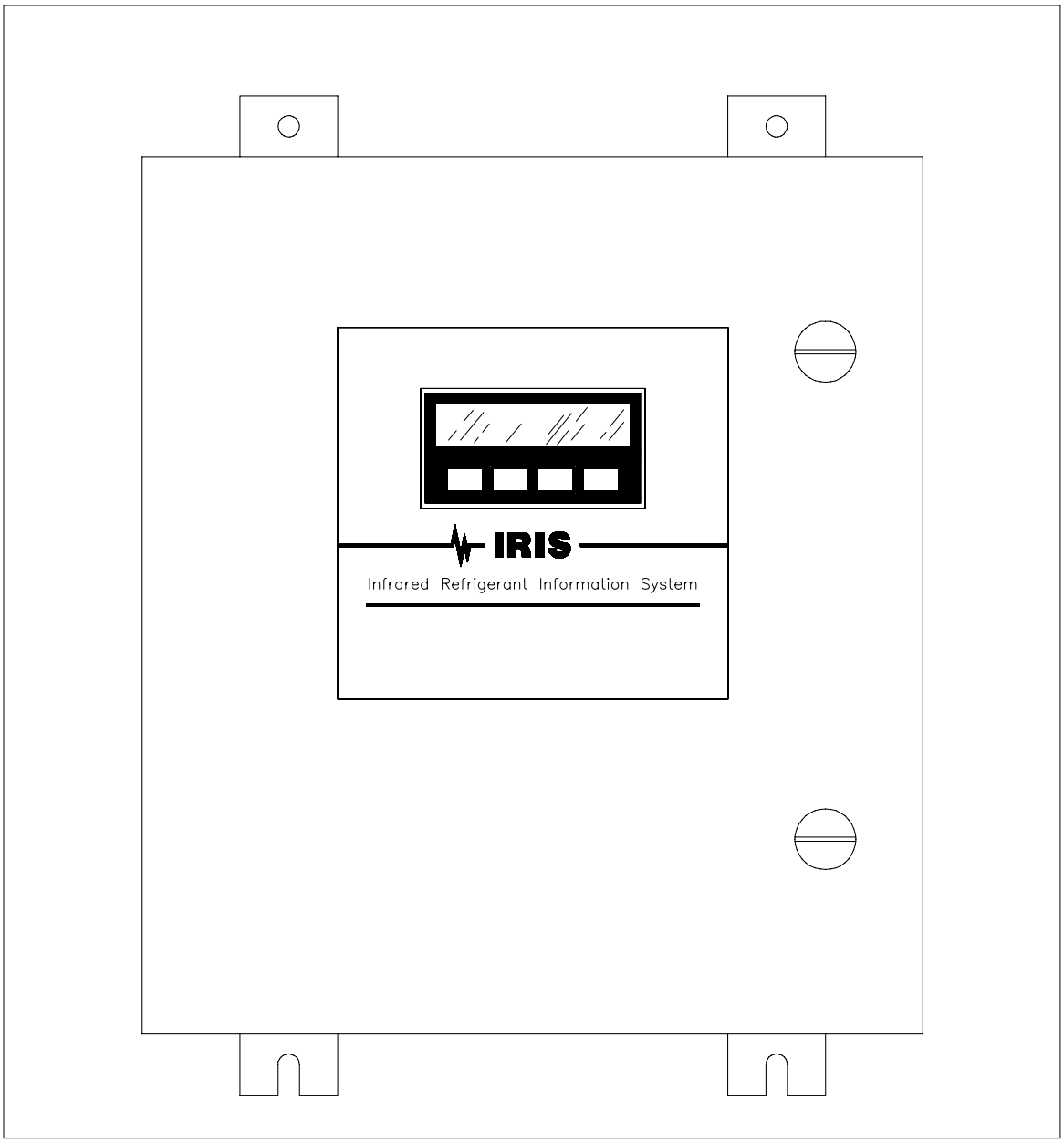

Form No. 4464401300
Release: Version 2.0, Rev. A
Date: February 5, 2001
Supersedes: Initial Release, 6/3/99

NOTE

Energy Controls International (ECI), formerly an ECI Group company, has been acquired by Danfoss Inc., a global leader in refrigeration controls, motion controls, and heating & water controls. Within the text of this manual, 'Danfoss/ECI' is used to reference this new partnership.

©2001 Danfoss Inc.
All rights reserved • Subject to change without notice • Printed in the U.S.A.

Table of Contents

Table of Contents ..... **i**

List of Figures ..... **iii**

List of Tables ..... **v**

INTRODUCTION **1-1**

GENERAL WARNINGS AND PRECAUTIONS **1-2**
IRIS Specifications 1-4
Performance Specifications 1-4
Operating Specifications 1-5
Transport And Storage Conditions 1-5

IDENTIFYING YOUR UNIT **1-6**
Multipoint Sequencer 1-6
Beacon 1-6
End Of Sample Line Filters 1-6
Iris Usage 1-8
Unit Standards 1-8
Iris Description 1-9
The Internal Multipoint Sequencer Unit 1-10
IRIS Terminology 1-10
Applications 1-10
Sensor Selectivity 1-11

IRIS INSTALLATION AND SETUP **2-1**
Unpacking 2-1
Initial Inspection 2-1
IRIS Location Guidelines 2-1
Sampling Point Location Guidelines 2-2
Equipment Configuration 2-2
Activity In The Room 2-2
Mounting The Unit 2-3
Relay Outputs 2-8
Multipoint Sequencer Operation 2-10

DISPLAY SCREENS **3-1**

CALIBRATION **4-1**
IRIS Unit Identification 4-3
Calibration Procedures 4-4
Zeroing The Monitor 4-5
Spanning The Monitor 4-6

MAINTENANCE 5-1
Replacement Parts 5-1

TROUBLESHOOTING 5-2

APPENDIX A: CHECK LIST A-1

APPENDIX B: RS232 OUTPUT B-1
Remote Gas Sampling Channel Identification B-1
Password Protection B-1

APPENDIX C: MULTI-REFRIGERANT CAPABILITY C-1
Introduction C-1
Specifications/Multi-Refrigerant Iris Unit C-1
Identifying Your Unit C-2
Installation C-3
Initial Setup C-3
Calibration C-3
Display Screens C-4

List of Figures

Figure 1-1: Identifying Your Unit....1-6
Figure 1-2: Single Point Sequencer Unit....1-7
Figure 1-3: Four Point Sequencer Unit....1-7
Figure 1-4: Eight Point Sequencer Unit....1-7
Figure 1-5: IRIS Unit With Optional Beacon....1-9
Figure 2-1: Front Door Latches....2-1
Figure 2-2: Typical Monitor Installation....2-4
Figure 2-3: Mounting Dimensions....2-5
Figure 2-4: Primary Power Wiring....2-6
Figure 2-5: Wiring Connections....2-7
Figure 2-6: Example: Threshold = 30%, Caution Alarm = 100....2-11
Figure 3-1: Display Screen Overview....3-2
Figure 3-2: Start Up And Normal Operations....3-3
Figure 3-3: Setup Screens....3-4
Figure 3-4: Span Calibration....3-5
Figure 3-5: Zero Calibration....3-5
Figure 3-6: Check Calibration....3-6
Figure 3-7: Diagnostic Screens....3-6
Figure 3-8: Diagnostic Screens....3-7
Figure 3-9: Diagnostic Screens....3-7
Figure 3-10: Data Screens....3-8
Figure 3-11: Sequencer Setup Screens....3-8
Figure 3-12: Sequencer Setup Screens....3-9
Figure 3-13: Alarm Level Screens....3-9
Figure 3-14: Alarm Latching Screens....3-10
Figure 3-15: Alarm Latching Screens....3-10
Figure 3-16: Audio Alarm Screens....3-11
Figure 3-17: Auxiliary Alarm Screens....3-12
Figure 3-18: Auxiliary Alarm Screens....3-12
Figure 3-19: Analog Output Screens....3-13
Figure 4-1: Calibration Kit Components....4-1
Figure 4-2: IRIS Models....4-3
Figure 4-3: Zero Calibration....4-5
Figure 4-4: Span Calibration....4-6
Figure 4-5: Ammonia or 404a Unit Calibration....4-6
Figure B-1: Access To Switches....B-2
Figure B-2: Switch Bank Locations....B-3
Figure B-3: Password Enabling Switches....B-4
Figure C-1: Label And RS232 Location....C-2
Figure C-2: Calibration Label & Manufacture Date Label....C-2
Figure C-3: Gas By Point Setup Screens....C-4
Figure C-4: Alarm Level Screens....C-5
Figure C-5: Alarm Level Screens....C-5

List of Tables

Table 1-1: IRIS Part Numbers 1-8
Table 1-2: Typical IRIS System for R-11 Cross-Sensitivity Response Data 1-11
Table 1-3: Typical IRIS System for R-12 Cross-Sensitivity Response Data 1-12
Table 1-4: Typical IRIS System for R-22 Cross-Sensitivity Response Data 1-12
Table 1-5: Typical IRIS System for R-123 Cross-Sensitivity Response Data 1-13
Table 1-6: Typical IRIS System for R-134a Cross-Sensitivity Response Data 1-13
Table 1-7: Typical IRIS System for R-113 Cross-Sensitivity Response Data 1-14
Table 1-8: Typical IRIS System for R-114 Cross-Sensitivity Response Data 1-14
Table 1-9: Typical IRIS System for R-500 Cross-Sensitivity Response Data 1-14
Table 1-10: Typical IRIS System for R-502 Cross-Sensitivity Response Data 1-15
Table 1-11: Typical IRIS System for Ammonia* Cross-Sensitivity Response Data 1-15
Table 1-12: Typical IRIS System for R404a Cross-Sensitivity Response Data..... 1-15
Table 4-1: RP Calibration Gases 4-2
Table 4-2: Calibration Sequence Screens 4-4
Table 5-1: IRIS Replacement Parts 5-1
Table B-1: Voltage Output Corresponds to Channel.....B-1
Table B-2: Function of Switches B-5
Table C-1: Typical Cross Sensitivity at 100 ppm at 25ºC for the IRIS Unit
Calibrated at 1000 ppm R11 as Expressed in Response Factors C-1

INTRODUCTION

The IRIS (Infrared Refrigerant Information System) Unit detects refrigerant gas leaks in a building by using infrared sensing technology. It interfaces with the RC-2000 Refrigeration Controller to provide continuous refrigerant gas monitoring. A single unit can monitor one point within a building; a single unit with a multipoint sequencer attached to the base can monitor multiple points within a building.

The IRIS Unit is intended for indoor use in mechanical equipment rooms housing air conditioning or refrigeration equipment or in areas where bulk refrigerants are stored.

The monitor uses infrared sensing technology to accurately measure refrigerant vapors with minimum interference from other vapors. The IRIS is factory-calibrated for a specific refrigerant. It measures down to one part-per-million (PPM). The unit monitors the signal and operates three alarm levels at a software-selectable gas concentration value. A trouble indicator alerts the operator when something is wrong with the unit.

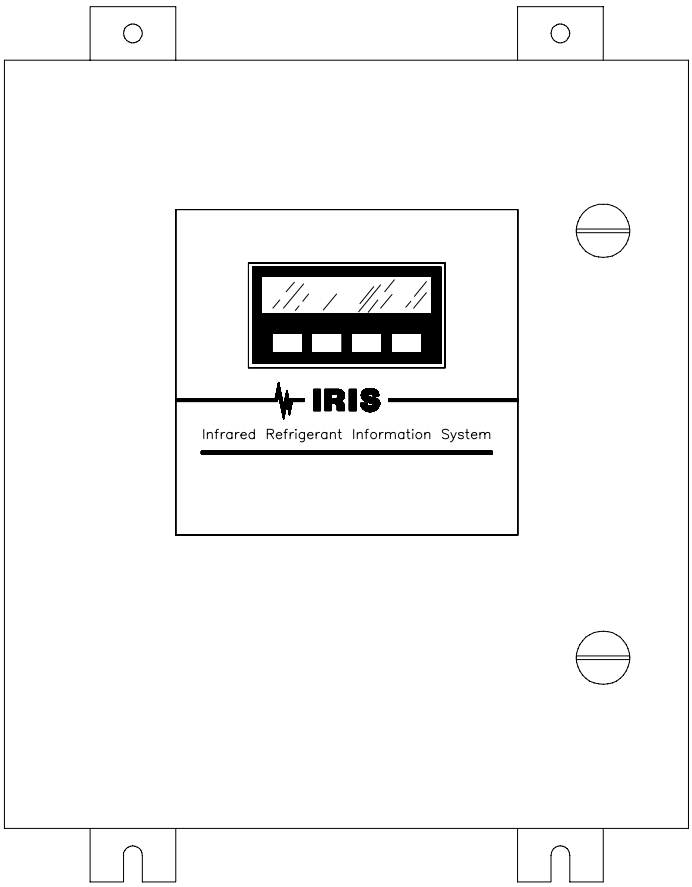

IRIS REFRIGERANT MONITOR

GENERAL WARNINGS AND PRECAUTIONS

Danfoss/ECI recommends that you heed the general warnings and precautions listed below for optimal use of the IRIS unit.

1. Install, operate, and maintain the IRIS in strict accordance with the labels, cautions, warnings, instructions, and limitations stated within this manual.

2. Do not install these monitors in outdoor areas or locations where explosive concentrations of combustible gases or vapors might occur in the atmosphere; this may include:

   - Class 1 areas, as defined by the NEC
   - Group A, B, C, and D areas, as defined by the NEC

IMPORTANT

Locate the monitors in non-hazardous areas or an explosion may occur.

3. Note that the IRIS Refrigerant Monitor is designed to detect **ONE** particular refrigerant gas or vapor at ambient atmospheric pressures. The **unit does not detect** refrigerant gas at **elevated temperatures**.

4. High levels of/or long exposure to **certain compounds in the tested atmosphere MAY CONTAMINATE** the sensor.

IMPORTANT

In atmospheres where the system may be exposed to contaminants, perform calibration frequently to ensure dependable system operation and accurate indications.

5. **DO NOT PAINT:**
   - on the IRIS System
   - near any of the IRIS system sample line inlets

This ensures that paint is not deposited on the sample inlet fitting of the units.

WARNING

Paint deposits interfere with the sampling process (i.e., a sample of the atmosphere being monitored is drawn into the IRIS System).

6. **CALIBRATE after** installation.

NOTE

Failure to calibrate your unit after installation could result in false or erroneous readings.

7. Check your unit with a known concentration of the gas that you calibrate it for (this assures proper overall operation of your unit).

IMPORTANT

To absolutely assure the proper overall operation of your unit, you must perform a calibration check as part of the routine inspection of the system.

8. Perform periodic leak checks on all of the sample lines and all flow system components and fittings of the IRIS System to assure proper operation.

(→ turn to the next page for more general warnings and precautions)

9. Use only genuine Danfoss/ECI replacement parts when performing any maintenance procedures provided in this manual.

WARNING

Failure to use **Danfoss/ECI replacement parts** may seriously impair instrument performance.

REPAIR or alteration of the IRIS System **beyond the scope** of the maintenance instructions in this manual or by anyone other than authorized Danfoss/ECI **SERVICE PERSONNEL** could cause **PRODUCT FAILURE** and **PERSONAL INJURY or DEATH!**

Properly **VENT THE EXHAUST** of the IRIS System to a safe area. Improper venting of the exhaust may cause **SERIOUS PERSONAL INJURY or DEATH!**

10. Ensure that the gas sample to the system is as clean and as non-condensing as possible. Install filters in all sample inlet lines as needed to obtain a clean gas sample.

11. Do not install the unit where condensation may form. (Condensation may clog or block the sampling line; this prevents the instrument from receiving new or fresh gas samples from the area being monitored.)

12. The IRIS Refrigerant Monitor must be installed, located and operated in accordance to all applicable codes. These codes include, but are not limited to, the National Fire Prevention Code and the National Electric Code.

IMPORTANT

Failure to comply with the above warnings can result in serious personal injury or death.

CAUTION

Do not attempt to modify or adjust the sensing element.

IRIS Specifications

Performance Specifications

Stability	0-50 PPM ±1 PPM; ammonia is ±2 PPM 51-1000 PPM ±10% of reading
Short term noise	±1PPM peak over a 10-minute period ammonia is ±2 PPM
Linearity	0-50 PPM ±1 PPM; ammonia is ±2 PPM 51-1000 PPM, ±10% of reading
Warm-up time (ready)	24 hours maximum, typically 20 minutes at 70°F ambient
Response time	90% of a step-change in 70 seconds
Transport time	500 feet/167 meters of sampling tubing length; 13 minutes for a 90% step change 150 feet/50 meters of sampling tubing length; 105 seconds for a 90% step change
Operating temperatures	(0°C to 50°C)/(32°F to 122°F)
Temperature effect	+0.3% per °C of reading
Relative Humidity	0 to 95%, RH non-condensing
Sample flow rate	0.75 liter per minute (minimum with maximum tubing length)
Maximum sample or exhaust tubing length	150’ (45m) with 1/8” ID tubing, ¼”OD (total of inlet & outlet); 500’ with 0.18” ID tubing
Operating pressure	Ambient atmospheric

Operating Specifications

Voltage Rating	100 to 240VAC, 50-60Hz
Power requirements	0.88A @ 120VAC 0.54A @ 240VAC
Trouble relay	Normally energized, Form C contact: 240VAC, 8A resistive SPDT
Warning relay	One relay, Form C contacts: 240VAC, 8A resistive SPDT
Caution relay	One relay, Form C contacts: 240VAC, 8A resistive SPDT
Alarm relay	One relay, Form C contacts: 240VAC, 8A resistive SPDT
Analog outputs	4-20mA sourcing, 1,000 ohm load, 0-10V, 2K ohm load
Maximum output signal load for 4-20mA output	1,000 ohms (includes wiring)
Audio alarm drive output	10VDC, 100 ohm load maximum (available only with non-beacon models)
Sample tubing connections	¼” OD
Dimensions	18” H x 16” W x 7” D (47.52 cm H x 14.64 cm W x 17.78 cm D)
Weight of IRIS with sequencer	45 lbs. (20 kg)

Transport And Storage Conditions

Temperature	(-55° to +70°C)/(-67° to 158°F)
Humidity	99% RH non-condensing

IDENTIFYING YOUR UNIT

Multipoint Sequencer

The IRIS Unit monitors different refrigerants. However, each unit is factory-calibrated to detect one type of refrigerant. Check the label inside the front door to determine which gas your unit is designed to detect (Figure 1-1). For specific guidelines on using the RS232 function (serial communication port), see Appendix B. For specific guidelines on the multi-refrigerant version of the IRIS, see Appendix C.

The unit monitors only one zone or location, but your instrument may contain a Multipoint Sequencer capable of monitoring up to four or eight different zones or locations. To determine the number of sampling locations that your particular unit is able to monitor, carefully tilt the unit and count the number of inlet ports at the bottom of the case (Figure 1-2, 1-3, or 1-4).

Beacon

The optional beacon is mounted on top of the unit (Figure 1-5). It is powered by the monitor's internal DC voltage.

End Of Sample Line Filters

End-of-sample line filters are required for proper unit operation.

IMPORTANT
If the end-of-sample line filters are not included, they must be purchased (Part # CC/01703300).

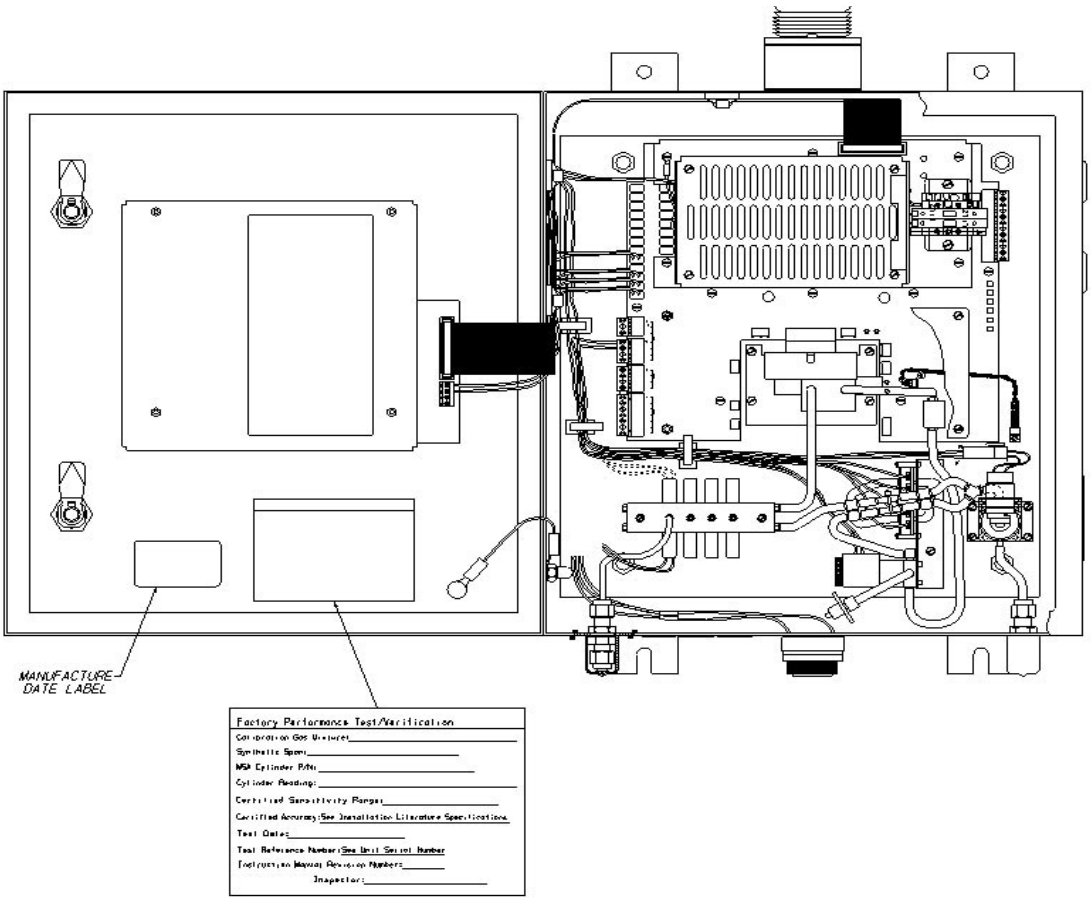

Figure 1-1: Identifying Your Unit

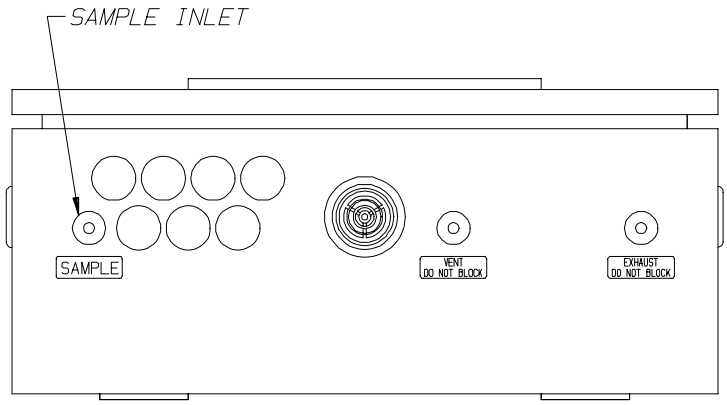

Figure 1-2: Single Point Sequencer Unit

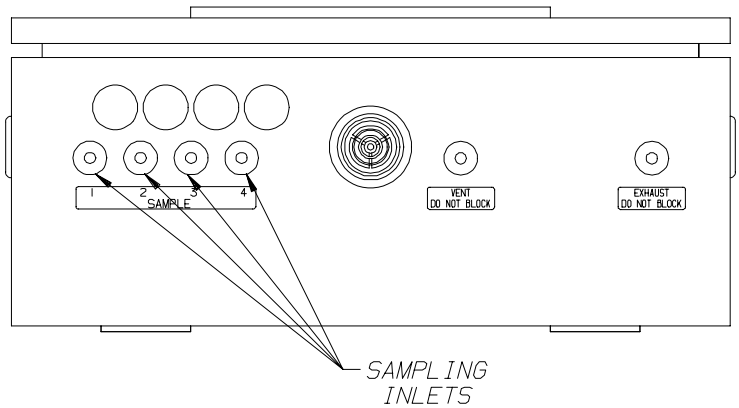

Figure 1-3: Four Point Sequencer Unit

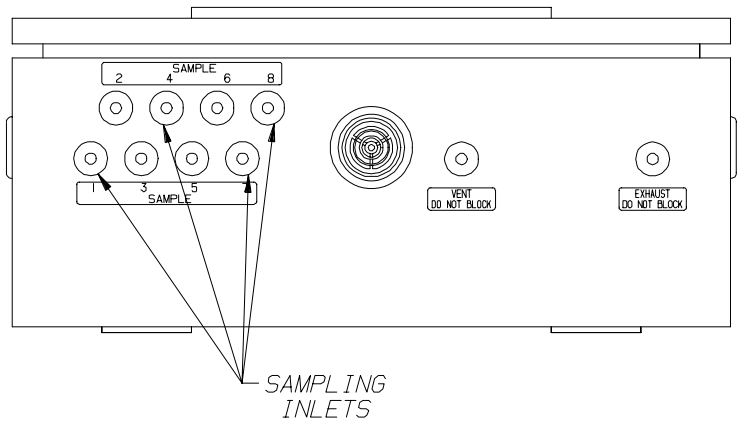

Figure 1-4: Eight Point Sequencer Unit

Iris Usage

Danfoss/ECI recommends that you use the IRIS monitor in the following ways:

- Indoor use for mechanical equipment rooms that house air conditioning
- Refrigeration equipment use areas that store bulk refrigerants

The unit uses infrared sensing technology, which allows accurate measurement of refrigerant vapors with minimum interference from other vapors.

Unit Standards

Each IRIS unit is factory-calibrated for one type of refrigerant. It measures down to one part-per-million (PPM). It monitors the signal and operates three alarm levels at a software-selectable gas concentration value. Further, a “trouble” indicator alerts you when the unit malfunctions. The standard unit monitors only one zone or location; however, multipoint sequencer units can monitor between four and eight points (locations within a facility).

Danfoss/ECI recommends that you enter the part number and description of your unit in the space provided at the end of Table 1-1 for easy reference. To determine the number of sampling locations that your unit is able to monitor, carefully tilt the unit and count the number of inlet ports at the bottom of the case (Figure 1-2, 1-3, or 1-4).

See Table 1-1 below for a part number listing. The type of refrigerant that your IRIS is calibrated to monitor determines your IRIS Part #.

All units listed below are Underwriters Laboratory (UL) approved **EXCEPT** the ammonia units.

R-11	R-12	R-113
R-114	R-500	R-502
R-123	R-22	
R-134a	R-404a	

Table 1-1: IRIS Part Numbers

UNIT DESCRIPTION	PART NUMBER
R 22/R 404-A, 8 PT., 0-1000 PPM	CC/01703000
R 404-A/HP 62, 8 PT., 0-1000 PPM	Contact Danfoss/ECI
R 22, 8 PT., 0-1000 PPM	Contact Danfoss/ECI
R 134A, 8 PT., 0-1000 PPM	Contact Danfoss/ECI
R 12, 8 PT., 0-1000 PPM	Contact Danfoss/ECI
AZ 50, 8 PT., 0-1000 PPM	Contact Danfoss/ECI
R 502, 8 PT., 0-1000 PPM	Contact Danfoss/ECI
Combination of any 2 gases, 8 PT., 0-1000 PPM	Contact Danfoss/ECI
*Ammonia, 8 PT., 0-1000 PPM	Contact Danfoss/ECI
YOUR UNIT DESCRIPTION:	**YOUR UNIT PART NUMBER:**
*Unit not evaluated by Underwriters Laboratory	

Iris Description

The IRIS has the following features and performs the following functions:

1. Monitors refrigerant gases up to 1000 parts-per-million (PPM).

2. Is factory calibrated to the full-scale value of refrigerant gas.

3. Provides a digital readout for multipoint monitors; it also shows the point number currently sampled by the unit.

4. Allows refrigerant gas detection in applications where contaminants or interferants preclude the use of other techniques.

5. Is highly selective to enable operation in:
   - Areas with varying humidity
   - Areas containing other contaminants

6. Operates over a wide temperature range.

7. Has front-panel windows for viewing:
   - Gas concentration display
   - Diagnostics
   - Alarm conditions

8. Comes standard with:
   - Four sets of relay contacts
   - Two completely independent outputs:
     0-10V
     4-20mA

9. One input: 4-20mA, assignable to the ALARM relay

10. Is also used for applications requiring long-term stability and low maintenance.

11. Operates on the photo-acoustic principle, allowing refrigerant gas concentration measurement in a complex mixture of background gases.

12. Is compensated for the relative humidity of the gas to give excellent zero stability and enable alarms at refrigerant gas levels as low as 3 PPM.

13. Serial data output to Danfoss/ECI's RC-2000 controller.

NOTE
Many features of this unit are not needed for the RC-2000 to function as the alarm control unit.

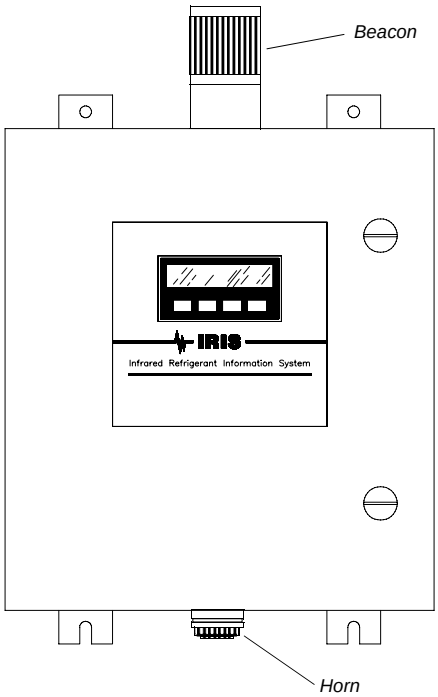

Figure 1-5: IRIS Unit With Optional Beacon

The Internal Multipoint Sequencer Unit

The internal multipoint sequencer unit increases the performance capability of a single IRIS unit in the following ways:

- Allows a single IRIS unit to monitor up to four or eight points (locations within a facility), if equipped.
- Can remotely sample each point at a maximum distance of 150 feet from the IRIS.
- Contains all necessary flow components (excluding end-of-line filter and sampling line) to properly sample from four to eight points and indicate the gas or vapor concentrations.

IRIS Terminology

The following terms are frequently used to explain the IRIS units and their function. Danfoss/ECI recommends that you use this section as a reference.

Zero: A zero (0) indication on the meter display usually indicates fresh air (i.e., no refrigerant gas present).

Zeroing: The process of placing a zero gas on the unit during calibration.

Span: Full-scale or up-scale reading on the meter display.

Spanning: The process of placing a full-scale or span gas on the unit during calibration.

Span Gas Value: The gas concentration that gives the instrument a full-scale or up-scale value. This value is printed on the calibration gas cylinder that contains the gas.

Flow Rate: Volume of gas drawn through the sample line per minute.

Exhaust Gas: Sample gas after it passes through the sensor.

Pump: The electric motor-driven device that moves the gas sample to the IRIS monitor.

Alarms: The IRIS system has three alarms. They alert you when the system has reached specific, user-adjustable refrigerant gas concentrations. The alarm levels include:

Level 1 (Caution)
Level 2 (Warning)
Level 3 (Alarm)

Relative Humidity: The percent of water vapor saturation in the air at a given temperature.

Point Number: The location or area from which a gas sample is drawn. This number can be between four and eight areas that are sequentially numbered from 1-8.

Bypass: The sequencer is a look-ahead system; bypass gas flow is drawn from the next area to be sampled. This feature reduces the monitor response time when long sampling lines are used.

Fresh Air: Air that has no possibility of containing refrigerant gas.
Important: Contamination with refrigerant gas would interfere with the calibration and the flushing of the instrument.

Temperature Effect: The gas response displayed by the instrument (PPM) can change ±0.3% for each degree Celsius that the instrument is operating above/below the temperature at which the instrument was last calibrated.

Applications

The IRIS is factory-calibrated for the refrigerant gas specified. When calibrated, the IRIS system is used in a variety of industrial applications that encompass the examples below:

- Refrigerant gas leak detection into the atmosphere
- Ambient air monitoring for health and safety purposes

Sensor Selectivity

Although the IRIS Refrigerant Monitor is factory-calibrated for a specific refrigerant gas, it is highly selective to refrigerant gases in the air, and the system responds to other gases (interferants). Actual cross sensitivities vary from instrument to instrument.

IMPORTANT

If it is not known whether the gas to be detected is an interferant gas, contact Danfoss/ECI at 410-403-4000 between the hours of 8:30 A.M. and 4:30 P.M. Eastern Time, or 410-527-1629 after regular business hours.

(Subsequent to May, 2001: (410) 931-8250 or 1-800-877-2398 after business hours)

Refer to Tables1-2 through 1-12 that follow for IRIS sensitivity data.

Table 1-2: Typical IRIS System for R-11 Cross-Sensitivity Response Data

GAS	CONCENTRATION (PPM)	EQUIVALENT PPM R-11
Acetone	100	14
Methyl Ethyl Ketone	100	32
Methanol	1000	130
iso-Propanol	500	400
Methylene Chloride	100	0
Xylene	100	0
Ammonia	50	0
R 113	100	25
R 11	100	100
R 22	100	30
R 12	983	490
R 134 A	100	20
R 123	100	3
Propane	0.6%	18
Ethylene	500	20

Test Conditions:
Calibrated 0-100 PPM R-11 in N_2;
Temperature: 25°C

Table 1-3: Typical IRIS System for R-12 Cross-Sensitivity Response Data

GAS	CONCENTRATION (PPM)	EQUIVALENT PPM R-12
Acetone	100	3
Methyl Ethyl Ketone	1000	25
Methanol	1000	2
Methylene Chloride	1000	14
Trichloroethylene	1000	167
Ethyl Acetate	1000	22
Xylene (ortho-Xylene)	1000	5
R113	100	35
R11	100	5
R22	100	1
R12	100	100
R134A	100	2
R114	100	45
Test Conditions: Calibrated 0-100PPM R-12 in N_2; Temperature: (-25°C)		

Table 1-4: Typical IRIS System for R-22 Cross-Sensitivity Response Data

GAS	CONCENTRATION (PPM)	EQUIVALENT PPM R-22 (PPM)
Acetone	100	<1
R11	100	16
R123	100	35
R134A	100	25
R1132A	100	40
R22	100	100
R113	100	39
Test Conditions: Calibrated 0-100 PPM R-22 in N_2; Temperature: 25°C		

Table 1-5: Typical IRIS System for R-123 Cross-Sensitivity Response Data

GAS	CONCENTRATION (PPM)	EQUIVALENT PPM R-123 (PPM)
Acetone	100	22
Methyl Ethyl Ketone	500	48
Methanol	100	2
iso-Propanol	100	5
Methylene Chloride	1000	14
Trichloroethylene	1000	4
Ethyl Acetate	100	42
Xylene (ortho-Xylene)	1000	5
Ammonia*	910	7
Natural Gas	1000	5
R113	100	80
R11	100	<1
R22	100	4
R12	100	8
R134A	100	140
R123	100	100
Test Conditions: Calibrated 0-100 PPM R-123 in N_2; Temperature: 25°C		
*This gas has not been evaluated by Underwriters Laboratories, Inc. for the IRIS Unit		

Table 1-6: Typical IRIS System for R-134a Cross-Sensitivity Response Data

GAS	CONCENTRATION (PPM)	EQUIVALENT PPM R-134a (PPM)
R113	100	17
R11	100	2
R22	100	1
R134A	100	100
R123	100	8
Test Conditions: Calibrated 0-100 PPM R-134A in N_2; Temperature: 25°C		

Table 1-7: Typical IRIS System for R-113 Cross-Sensitivity Response Data

GAS	CONCENTRATION (PPM)	EQUIVALENT PPM R-113 (PPM)
R11	100	1
R12	100	10
R22	100	5
R123	100	125
R134A	100	175
R114	100	155
R113	100	100
Test Conditions: Calibrated 0-100 PPM R-113 in N_2; Temperature: 25°C		

Table 1-8: Typical IRIS System for R-114 Cross-Sensitivity Response Data

GAS	CONCENTRATION (PPM)	EQUIVALENT PPM R-114 (PPM)
R11	100	105
R12	100	50
R22	100	35
R113	100	30
R123	100	3
R134a	100	20
R114	100	100
Test Conditions: Calibrated 0-100 PPM R-114 in N_2; Temperature: 25°C		

Table 1-9: Typical IRIS System for R-500 Cross-Sensitivity Response Data

GAS	CONCENTRATION (PPM)	EQUIVALENT PPM R-500 (PPM)
R11	100	8
R22	100	0
R113	100	41
R114	100	60
R123	100	2
R134a	100	7
R502	100	5
R500	100	100
Test Conditions: Calibrated 0-100 PPM R-500 in N_2; Temperature: 25°C		

Table 1-10: Typical IRIS System for R-502 Cross-Sensitivity Response Data

GAS	CONCENTRATION (PPM)	EQUIVALENT PPM R-502 (PPM)
R11	100	25
R22	100	160
R123	100	60
R134a	100	40
R502	100	100
Test Conditions: Calibrated 0-100 PPM R-502 in N_2; Temperature: 25°C		

Table 1-11: Typical IRIS System for Ammonia* Cross-Sensitivity Response Data

GAS	CONCENTRATION (PPM)	EQUIVALENT PPM AMMONIA (PPM)
Acetone	1000	45
Methyl Ethyl Ketone	100	25
Methane	2.5%	5
Iso-Propanol	1000	725
Methylene Chloride	1000	12
O-Xylene	100	7
NH3	100	100
R11	500	50
R22	550	15
R12	100	65
R134a	100	130
R123	100	20
Propane	0.6%	50
Pentane	0.75%	100
Ammonia	100	100
Test Conditions: Calibrated 0-100 PPM Ammonia in N_2; Temperature: 25°C		
*This gas has not been evaluated by Underwriters Laboratories, Inc. for the IRIS Unit.		

Table 1-12: Typical IRIS System for R404a Cross-Sensitivity Response Data

GAS	CONCENTRATION (PPM)	EQUIVALENT PPM R-404a (PPM)
R11	100	<1
R12	100	3
R22	100	2
R113	100	30
R123	100	40
R134a	100	56

IRIS INSTALLATION AND SETUP

Unpacking

Upon receipt of the unit, inspect the shipping carton for signs of visible damage.

IMPORTANT

- To ensure proper hookup of your unit, store the unit in a dry, secure place in its original shipping carton prior to installation.
- Danfoss/ECI recommends saving the original packing container to reuse in case of a service return.
- Report any damage immediately.

Follow the instructions below to unpack the IRIS:

1. Carefully remove the IRIS Monitor from its shipping container(s). This prevents damage to sensitive electrical components.
2. Search through all packing material to ensure a complete order. Immediately report any oversights to Danfoss/ECI.

NOTE

You should receive the following:

- an instrument
- a manual
- end-of-line filters (may be purchased separately)

3. Use a screwdriver to loosen the two latches on the IRIS door with a counter clockwise ¼ turn.
4. Open the front door.
5. Remove the inside packing material from the unit.

WARNING

The unit does not operate properly if packing material is left inside the unit. Do not operate the unit with packing material inside.

Initial Inspection

Open the front door and carefully inspect the components and assemblies inside the enclosure. If you notice system damage or an incomplete order, notify your carrier and file a claim form immediately.

WARNING

Do not install or operate a damaged unit. It may not function properly and may not alert you to any suspect gas conditions.

IRIS Location Guidelines

The monitor's performance depends on its location and sensing pick-up location(s). Follow the guidelines below before mounting your monitor.

1. Make sure that you have the appropriate hardware to mount your IRIS.
2. Mount your unit in an area visible to the monitor (usually the front of the equipment room or by the monitoring point).

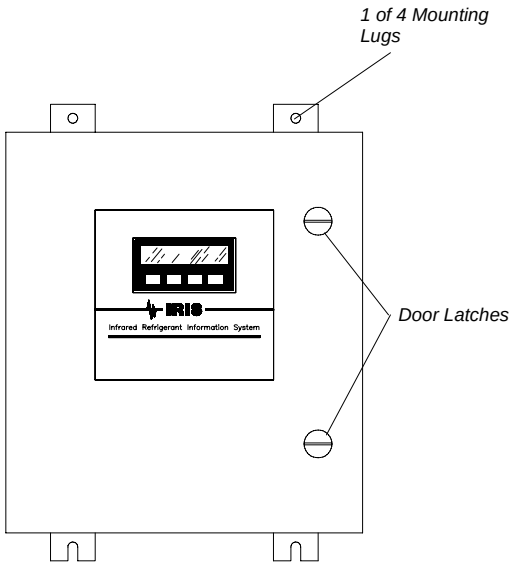

Figure 2-1: Front Door Latches

NOTE
In order to service and calibrate the unit, easy viewing of the front panel is essential.

3. Allow at least three inches of clearance around all surfaces except the mounting surface.

4. Mount the unit vertically on a secure backing.

NOTE
For best results, Danfoss/ECI recommends the following mounting precautions:

Do not mount your unit by:

- Piping and piping support that are subject to vibration and shock.
- A heat source
- Moisture
- Solar heat

WARNING
Do not mount this unit in areas that may contain a flammable mixture of gas and air. An explosion may occur!

IMPORTANT
Do not block or obscure the IRIS door. You need to read the displays.

Sampling Point Location Guidelines

When installing sensing points on your unit, remember this guideline:

1. Do not remote mount sensing points at distances greater than 150 feet from the monitor (500 feet if 0.180” I.D. tubing is used) in an area where refrigerant vapors are most likely to accumulate (see Figure 2-2). (The 150 feet allowance includes the total sample and exhaust line length.)

Equipment Configuration

Conduct your equipment sampling according to these guidelines:

- If the room has one chiller: sample at the unit perimeter.
- If the room has two chillers: sample between the chillers.
- If the room has three or more chillers: sample with multiple monitors or a single monitor with a multi-point sampling system. (Always consider airflow patterns.)

Activity In The Room

Consider the expected activities in the room when deciding where to put the sensing point. As stated earlier, refrigerants concentrate near the floor. Typically, sampling 12 to 18 inches above the floor provides early warning and adequate protection for someone working closely to the floor. If it is expected that an occupant’s breathing zone may be less than 12 to 18 inches off the floor, locate the sampling point accordingly.

NOTE
Select sampling locations that result in the shortest possible line length in order to reduce transport time.

Consider the following guidelines when selecting the location for the sampling point(s).

1. Most refrigerants are heavier than air, they sink to the floor or accumulate in low areas such as pits and stairwells. These locations must be ventilated and monitored.

2. Ammonia gas is lighter than air and tends to rise to the ceiling.

3. Place the end of the sampling line in an area that provides the instrument with a representative sample; ventilation smoke tubes are useful in determining airflow patterns in ambient sampling areas.

4. Properly exhaust the instrument to a safe area or to outside atmosphere.

5. Ensure that the sampling area is free of particulate matter and condensing moisture; ensure that sample lines do not draw moisture up into the line.

NOTE

The sample gas must be adequately filtered before entering the instrument. End-of-line particulate filters are provided with the unit. These filters must be installed at the end of all sample lines.

6. Ensure that the end of the sampling line is unobstructed to allow the sample to flow freely to the instrument.

7. Keep sample lines as short as possible to reduce transport time.

CAUTION

Tubing radii must be wide enough to prevent an obstruction (such as a kink or bend) that would prevent the instrument from sampling the intended area.

8. **DO NOT**:
   - Back-pressure the exhaust line or
   - Connect it to a vacuum source or
   - Install a flow meter in the exhaust line.

   ALWAYS:
   - Connect an exhaust line that is vented to a safe area or an outside atmosphere.

Mounting The Unit

To ensure proper unit mount: the instrument has four mounting lugs. Securely mount the unit to a wall or support, using appropriate hardware.

IMPORTANT

Do not mount the unit directly to a chiller. The vibration from the chiller may cause the unit to read incorrectly.

SAMPLE SYSTEM INSTALLATION

Refer to the instructions below for an example of how to set your system up:

1. Remove all caps and fittings on the gas inlets and exhaust of the IRIS Monitor. (See Figure 2-3.)

WARNING

Failure to remove any caps from the unit gas inlet or exhaust fittings prevents gas sampling and may cause an undetected toxic and hazardous gas build-up and a flow trouble indication.

2. Route the ¼” OD tubing into the areas to be monitored.

   For Refrigerant Units: Danfoss/ECI recommends ¼” OD rigid copper tubing with compression type fittings. Do not use soldered connections on the sample line(s) because the monitor is sensitive to the solvents in the soldering flux paste.

   For Ammonia Units: Danfoss/ECI recommends that stainless steel tubing and filters be used. Do not use copper or brass for tubing or connection components; they are not compatible with ammonia.

3. After the line(s) are installed and BEFORE they are connected to the monitor:
   a. Clean lines with compressed air or nitrogen to remove any debris.
   b. Perform a leak check to assure that they are free of leaks.
   c. Connect the line(s) to the sample port(s) on the monitor.
   d. Install the end-of-line filters.

NOTE

All unused sample inlet(s) must be plugged or have an end-of-line filter installed to avoid debris entering the unit. To disable these unused lines, refer to the setup screen shown in Figure 3-11.

4. Install all tubing ends to the inlet fittings of the unit. Mark the location identity of each individual tubing on the tubing or on the inside of the instrument itself. (See Figure 2-3).

5. Connect the exhaust fitting to tubing that is routed to an area where refrigerant gases may be safely dispersed.

CAUTION

Ensure that every sample tubing has an end-of-line filter on it; otherwise, damage to the internal components may result.

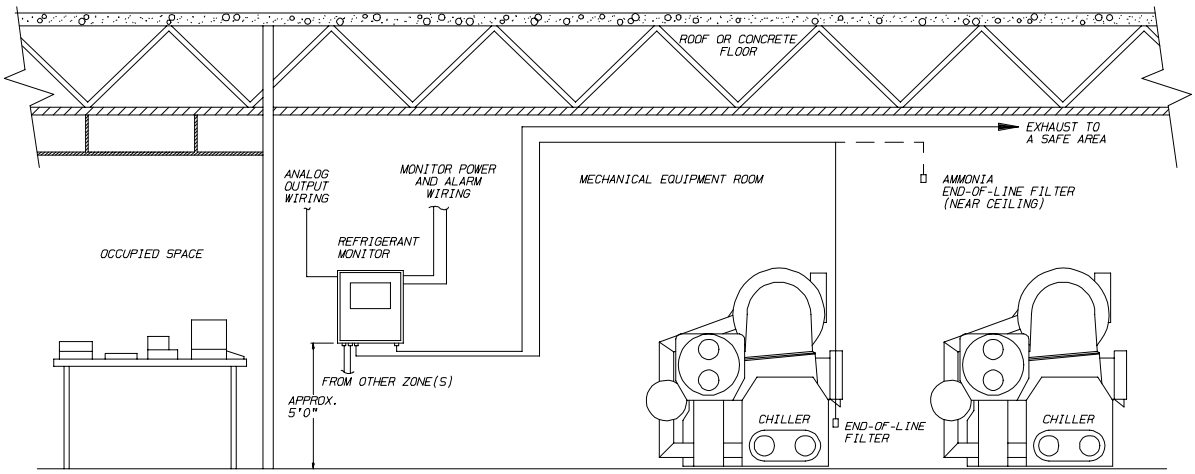

Figure 2-2: Typical Monitor Installation

(Monitors without sequencer option have one sampling port; those with sequencer have four or eight ports)

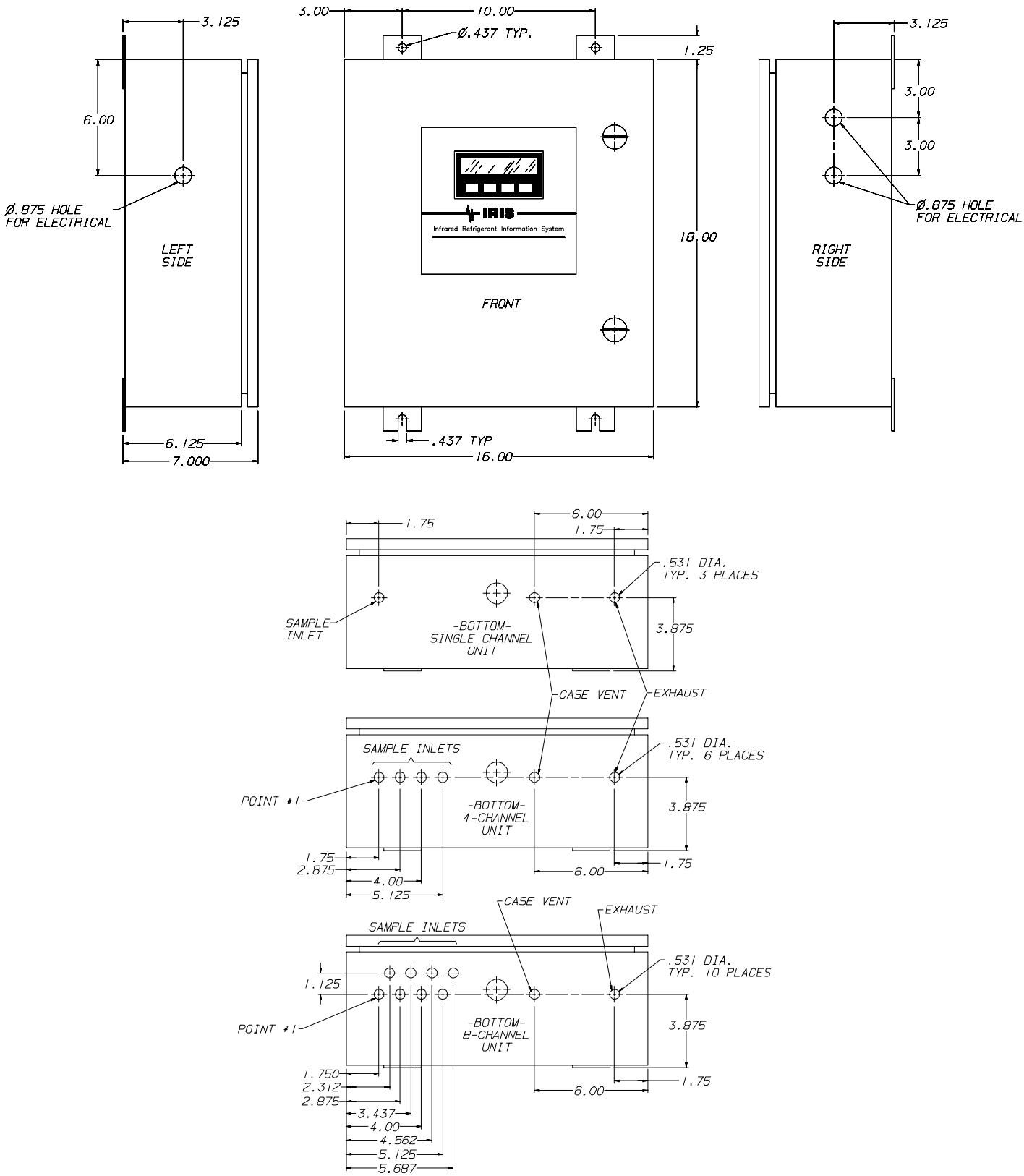

Figure 2-3: Mounting Dimensions

WIRING CONNECTIONS

OPENING THE UNIT:
All wiring to the IRIS unit is made via the side entries. Open the unit for complete access to all wiring connections.

ENSURE THAT ALL WIRING CODES ARE FOLLOWED. These codes include, but are not limited to, the National Electric Code.

> **CAUTION**
> Do not open the IRIS unit door unless the equipment is protected from splashing, spraying, or dripping water; otherwise, damage to the internal components may result.

UNIT POWER WIRING

A separate, dedicated power source is recommended for the refrigerant monitor to ensure that the unit remains powered when other circuits are shut down for servicing, routine maintenance, or shift changes.

The monitor uses a wide range power supply that can accept AC power from 100 to 240V, 50 or 60 Hz. The power wiring should enter the unit through one of the openings on the right side of the enclosure. Connections are made to the screw terminals labeled L1, L2, ACN and GND, located in the upper right side of the unit (Figure 2-4). The maximum wire size that these connectors can accept is # 12 awg.

The incoming power provided to the monitor determines the configuration of the fuse(s) and wiring to the main power terminal block. Figure 2-4 shows the fuse and wire connections for various voltages.

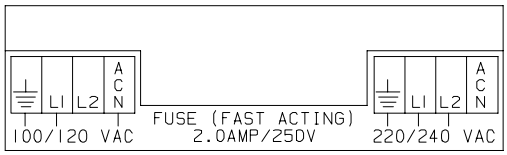

Figure 2-4: Primary Power Wiring

POWER SUPPLY WIRING

1. Using a screwdriver, loosen the two latches on the enclosure door (see Figure 2-1).

2. Open the front door.

3. Determine the power requirements for your IRIS unit, ensuring the power is clean and reliable. (Refer to the IRIS Specifications section for current capacity specifications).

> **CAUTION**
> If unsure of the power voltage available, contact your facility engineer or safety officer. Damage may occur to the instrument if incorrect power voltage is applied.

IRIS UNIT WIRING

1. Route power wiring through one of the entries in the side of the unit.

> **NOTE**
> Power wiring should be separated from relay wiring.

2. For a single fuse 100/120VAC power connection, connect the:

   - Power wire to L1
   - Neutral wire to ACN
   - Ground wire to the ground terminal

3. For a double fuse 220/240VAC power connection, connect power wires to L1 and L2 and ground wire to the ground terminal.

ANALOG SIGNAL OUTPUT WIRING

The IRIS unit has two available analog outputs. Each analog output is software-selectable between 10% or 100% of full scale:

- 4-20mA, isolated, current source type
- 0-10VDC

NOTE
Reference Figure 2-5 while reviewing this information.

These voltage and current outputs are proportional to the displayed refrigerant concentration. Connections are made to terminal strip J17 located on the lower left side of the main circuit board (see Figure 2-5).

Analog output wiring should enter the unit through the hole provided on the left side of the unit. The terminal portion of the connector can be removed from the circuit board for easier connection. The maximum wire size that these connectors can accept is listed #12 awg; the maximum cable length is 500 feet (166 meters).

NOTE
Danfoss/ECI suggests that Listed #18 awg, twisted-pair wire be used. If shielded wire is necessary, ground the shields of all cables at the receiving end of the signal. Do not ground or connect the shields at the IRIS monitor.

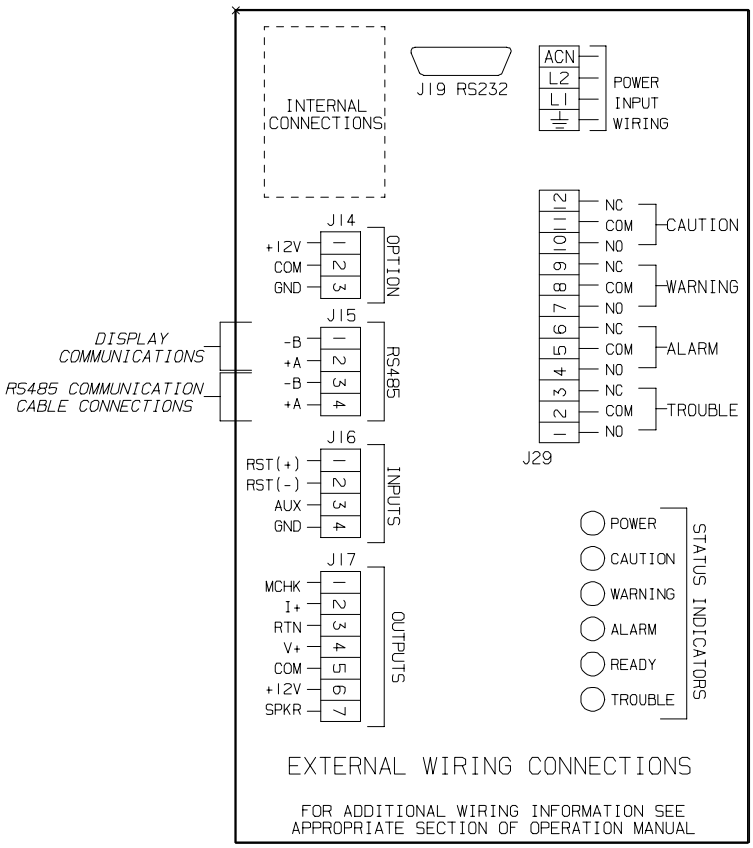

Figure 2-5: Wiring Connections

4-20mA

The 4-20mA output sources current to a separate return. Connections are made to terminals 2 (I+) and 3 (RTN) on terminal strip J17.

0-10VDC

The 0-10VDC output sources voltage to 2K ohms maximum load. Connections are made to terminals 4 (V+) and 5 (COM) on terminal strip J17.

The voltage output can be programmed to correspond to the channel presently being sampled. The front-panel screen shows:

1V/PT IF OUT = 1-10V

(indicating one volt per point if output equals one to 10 volts.)

When enabled, and the unit is monitoring from:

- Channel 1: the voltage output is one volt
- Channel 2: the voltage output is two volts

CAUTION

Bundle low voltage wiring together (lower than 30V). Separate it from high voltage wiring (higher than 30V).

Optional Alarm Beacon

Your unit may have an optional alarm kit installed. This kit is made up of an alarm horn and a beacon on the top of the unit. It is factory-wired and can be set up to sound when any alarm indication is given by the instrument. This function parallels the audible alarm output (when the horn sounds, the beacon lights).

Relay Outputs

Alarm Relays

The unit has three alarm relay outputs; they include:

- Caution (factory set to trip at 9 PPM)
- Warning (factory set to trip at 29 PPM)
- Alarm (factory set to trip at 700 PPM)

Each relay can be set up as latching/non-latching and/or normally-energized/normally de-energized. Contacts are Form C at 240VAC, 8 amps resistive. Connect wiring to terminal strip J29. User can adjust alarm trip points via the front panel (see Section 3, Figure 3-13).

Alarm Relay Connections Wiring

Three refrigerant level alarm relay outputs are provided. All alarm relays are Form C, SPDT relays that can be wired to either close or open contacts in an alarm condition.

Each relay has contacts for the following:

- Normally Open (NO)
- Common (C)
- Normally Closed (NC).

The function of each relay connector terminal is shown on Figure 2-5.

Relay wiring should enter the unit through one of the openings on the right side of the unit. Connections are made at the internal terminal strip labeled J29, located on the right side of the circuit board (see Figure 2-5). The terminal portion of the connector can be unplugged from the circuit board for easier wire connections.

NOTE

The maximum wire size that these connectors can accept is #12 awg.

Trouble Relay

The trouble relay within the unit shows when a trouble or start-up condition exists. It is factory-configured to operate in a fail-safe condition (this is different from the other relays). It operates in a normally energized mode.

RELAY ENERGIZED INDICATORS: The relay is energized when the instrument is:

1. Normally operating
2. In the calibration mode, or
3. In the setup condition

RELAY DEENERGIZED INDICATORS: The relay is deenergized in these instances:

1. When a fault is detected;
2. When the unit is in the startup state; or
3. When the main power is lost.

This means that power is no longer provided to the relay coil.

IMPORTANT
It is not possible to change the configuration or operation of the trouble relay.

The relay connector function or identification is as follows:

- Normally Open (NO)
- Common (COM)
- Normally Closed (NC).

See Figure 2-5 for a diagram that shows these connector functions.

NOTE
The diagram in Figure 2-5 shows the relay contacts in a deenergized state or in the trouble condition.

A relay contact is provided between the normally closed (NC) and common (COM) position. This contact is made when main power to the unit is lost or any other trouble condition exists.

Trouble Relay Connection Wiring

The trouble relay wiring should enter the unit through one of the entries on the right side of the unit.

IMPORTANT
Connections are made at the internal terminal strip labeled J29, positions 1, 2, and 3 (located on the right side of the circuit board-see Figure 2-5).

The terminal portion of the connector can be unplugged from the circuit board for easier wire connections. The maximum wire size that these connectors can accept is #12 awg.

Remote Reset

The audible alarm and latched refrigerant level alarms can be remotely reset through a switch that has a momentary contact opening (normally closed set of contacts). Connections are made to terminal strip J16, terminals 1 and 2 with the wiring entering the enclosure through the hole on the left side of the instrument. The switch must have signal-level contacts, typically gold-plated. The maximum distance from the reset switch to the monitor, using 18 awg wire, is 250 feet. The maximum wire size that these connectors can accept is #12 awg.

Audible Alarm Output

An output is provided to drive the piezo-electric horn on the bottom of the unit (see Figure 1-5). This output is available for customer use, if the beacon is not installed.

Auxiliary Input – Use UL Listed Devices

A 4-20mA analog input can be made to the monitor from another device such as another refrigerant monitor or an oxygen monitor. The input wiring should be brought into the enclosure through the hole on the left side of the instrument and connected to terminals 3 (AUX) AND 4 (GND) on terminal strip J16. It is recommended that listed #18 awg, twisted pair wire be used; maximum wire length is 250 feet. The maximum wire size that these connectors can accept is listed #12 awg. Shielded wire is necessary. Ground the shields of all cables at the transmitting end of the signal. Do not ground or connect the shield at the IRIS Unit.

CAUTION
All field wiring must be done in accordance with national and local electrical codes.

INITIAL CALIBRATION

WARNING
Calibrate after installation; otherwise, false or erroneous readings can result.

The initial calibration is the same as the routine calibration. (Refer to the Calibration section found later in this manual.)

IRIS TO RC-2000 CONNECTION

Follow the steps listed below to connect the IRIS to the RC-2000 refrigeration controller.

1. Connect the 3 foot ribbon cable (Part # CC/MOD-C) from the RS232 port on the IRIS system to the Danfoss/ECI adapter (P/N CC/20077400). For an example of the cable and port, see Figure 2-5.

2. Using a 6 conductor flat phone cable, connect the Danfoss/ECI adapter to the AUX port on the RC-2000 CPU (P/N 5120054400).

NOTE
If connecting to an older RC-2000 CPU (CPU P/N 5120001400), you must use adapter Part # CC/01683400 at the RC-2000.

3. Program the RC-2000 Leak Detect configuration for “IRIS.”

4. Program the RC-2000 Leak Detect Setpoints input as 8-1 through 8-8. Program the setpoints and alarm delay. The scale factor should be 250.

5. The RC-2000 unit is now setup to monitor the IRIS system.

Multipoint Sequencer Operation

The IRIS Unit with a sequencer has a normal dwell time of thirty seconds per sample line, or four measurement cycles.

To improve monitor performance in noisy environments and eliminate false alarms due to high noise, a user-selectable parameter “threshold” was established.

The factory value for this threshold is 30%.

- The threshold value is used with the Caution Alarm setpoint to determine when additional reading must be made on the current sample line to confirm actual concentration at the sample point.
- The allowable adjustment range for the threshold value is 30 to 70 percent.

The displayed concentration is based on a moving average of nine measurement cycles. After four measurement cycles, the display indicates 4/9 of the final value.

- If this value is greater or equal to the product of the threshold and the Caution Alarm value, the monitor dwells for an additional 60 seconds or eight more measurement cycles.
- Raising the threshold above 30% prevents false alarms but also requires greater gas concentrations to cause the Caution Alarm to trip (see Figure 2-6).

In the sequencer setup screens, unneeded points can be deactivated by using the right arrow key and selecting the point to be deactivated.

- When the change key is pressed, the number in the display goes blank.
- After pressing OK, the display shows a dark diamond to indicate a deactivated point (see Figure 3-11).

In the sequencer setup screens, the monitor can be locked on a single point by pressing CHANGE before the right arrow key.

- After pressing the RIGHT ARROW and OK, only after the selected point is indicated.
- After an hour (if no buttons are pushed), the monitor returns to normal sequencer operation (see Figure 3-12).

When calibrating:

- The gas inlet point can be selected.
- An inactive point can be selected.

After leaving calibration:

- The monitor returns to the previous sequencer setup (see Figure 3-4).

EXAMPLE (THRESHOLD = 30%, CAUTION ALARM = 100)

WITH UNIT READING ZERO, A SAMPLE OF 100 PPM REFRIGERANT IS APPLIED AND MONITOR RESPONDS AS FOLLOWS:

MEASUREMENT CYCLE:	1	2	3	4	5	6	7	8	9	10	11	12	
DISPLAYED VALUE:	11	22	33	44	55	66	77	88	100	100	100	100	CONCENTRATION
TIME (IN SECONDS):	7.5	15.0	22.5	30.0	37.5	45.0	52.5	60.0	67.5	75.0	82.5	90.0	(PPM)

SINCE 4/9 OF 100 = 44 AND 44 IS GREATER THAN 30 (IE:30% X 100 IS 30), THE MONITOR PERFORMS AN EXTENDED DWELL (OR A TOTAL OF 12 READING CYCLES) BEFORE PROCEEDING TO NEXT SAMPLE POINT.

NOTES:
if threshold = 70%, the concentration must be 158 to pick up a caution alarm set at 100
if threshold = 60%, the concentration must be 135 to pick up a caution alarm set at 100
if threshold = 50%, the concentration must be 112 to pick up a caution alarm set at 100

Figure 2-6: Example: Threshold = 30%, Caution Alarm = 100

DISPLAY SCREENS

Before applying power to the IRIS Unit, follow the Appendix A checklist. This helps to ensure that the instrument is properly configured for operation.

All instrument operation is performed through the front panel function keys and display. The display is a two-line by twenty-character vacuum fluorescent display. It is operated by using four function keys.

IMPORTANT

To set up, calibrate, or diagnose the IRIS, use the front panel display and function keys. Follow the on screen menus to service the IRIS for use.

Do not open up the IRIS Unit to perform these functions.

This section shows the most commonly used screens on the IRIS Unit. It also steps you through general system operation.

The Display Screen Flow Overview (Figure 3-1) shows a general system function flow. See the following figures for specific display screen details.

- Startup and Normal Operation Screen (Figure 3-2)
- Calibration Screens (Figures 3-4 through 3-6)
- Information Screens (Figures 3-7 through 3-10)
- Setup Screens (Figures 3-3 and 3-11 through 3-19)

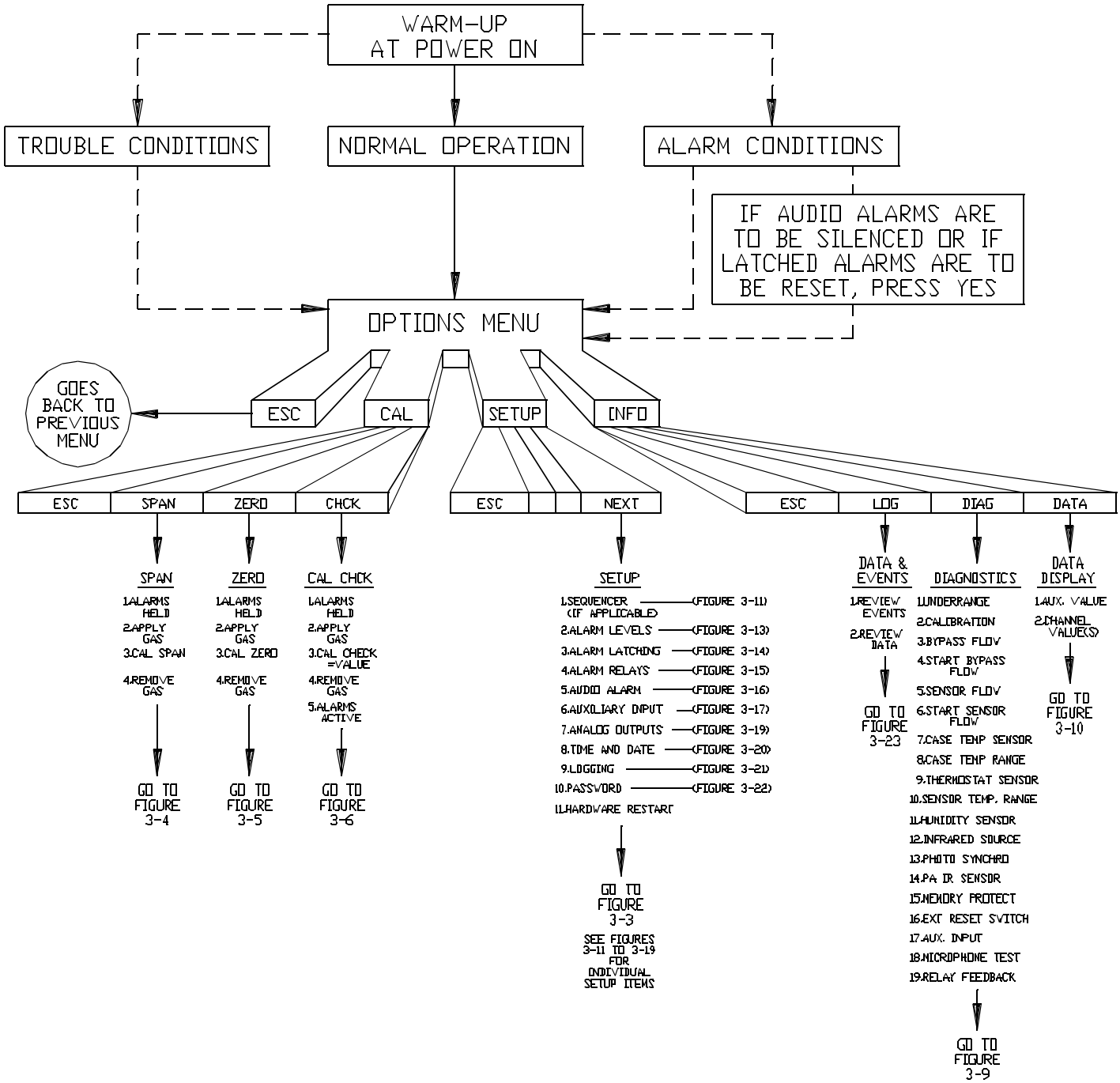

Figure 3-1: Display Screen Overview

START-UP AND NORMAL OPERATION SCREENS

At Power-ON...

```
R-123          WARMUP
ANY KEY FOR MENU
```

THIS IS THE FIRST SCREEN THAT WILL APPEAR AFTER A BRIEF HARDWARE AND MEMORY TEST WHEN POWER IS APPLIED. "ANY KEY" TAKES THE USER TO THE "OPTIONS MENU"

Normal Operation

```
R-123          25 PPM
ANY KEY FOR MENU
```

THIS IS A TYPICAL SCREEN AS IT WOULD APPEAR DURING NORMAL OPERATION. "ANY KEY" TAKES THE USER TO THE "OPTIONS MENU"

Trouble Condition

```
R-123          TROUBLE
ANY KEY FOR MENU
```

THIS SCREEN WOULD APPEAR IF A "TROUBLE" CONDITION OCCURRED. "ANY KEY" TAKES THE USER TO THE "OPTIONS MENU" SCREEN WILL FLASH IN THIS CONDITION.

Alarm Conditions

```
R-123          150 PPM
ANY KEY        CAUTION
```

SIMILAR SCREENS WILL APPEAR FOR WARNING AND ALARM. "ANY KEY" TAKES THE USER TO THE "OPTIONS MENU" SCREEN WILL FLASH IN THIS CONDITION.

Only if Audio Alarm is ON...

```
RESET ALARMS?
 ESC   NO   YES   NEXT
```

FROM THE ABOVE SCREENS THIS WILL APPEAR BEFORE THE "OPTIONS MENU" IF THE AUDIO ALARM IS ON OR ALARMS ARE LATCHED. "ESC" TO ABOVE SCREENS OR OTHER KEYS TAKE THE USER TO THE "OPTIONS MENU"

Options Menu

```
OPTIONS MENU:
 ESC  CAL SETUP INFO
```

"ESC" BACK TO ABOVE SCREENS. "CAL" FOR CALIBRATION MENU. "SETUP" FOR ALL SETUP PARAMETERS. "INFO" TO CHECK DIAGNOSTICS, TROUBLE CONDITIONS OR FOR ADDITIONAL DATA.

Sequencer Warmup Screen

```
PT:12345678:   WARMUP
ANY KEY        R-123
```

THIS IS HOW A SEQUENCER SCREEN WILL APPEAR DURING WARMUP (4-POINT SEQUENCER ALSO AVAILABLE). NON-ACTIVE POINTS ARE BLANKED OUT. "ANY KEY" TAKES THE USER TO THE "OPTIONS MENU"

Sequencer Screen

```
PT:12345678:   50 PPM
ANY KEY        R-123
```

THIS IS HOW SEQUENCER POINTS NORMALLY APPEAR. THE POINT BEING SAMPLED WILL BE DISPLAYED IN REVERSE VIDEO. NON-ACTIVE POINTS ARE BLANKED OUT. "ANY KEY" TAKES THE USER TO THE "OPTIONS MENU"

Sequencer Alarm Screen

```
PT:12345678:   50 PPM
AL:CWAAWC--    R-123
```

CAUTION, WARNING AND ALARM STATUS APPEAR BELOW EACH POINT. "ANY KEY" TAKES THE USER TO THE "OPTIONS MENU" "A" IS FOR AUXILIARY INPUT IF INSTALLED.

Sequencer Trouble Screen

```
PT:12345678:   TROUBLE
AL:CWAAWC--    R-123
```

THIS IS HOW TROUBLE IS INDICATED ON A SEQUENCER SCREEN. "ANY KEY" TAKES THE USER TO THE "OPTIONS MENU"

Figure 3-2: Start Up And Normal Operations

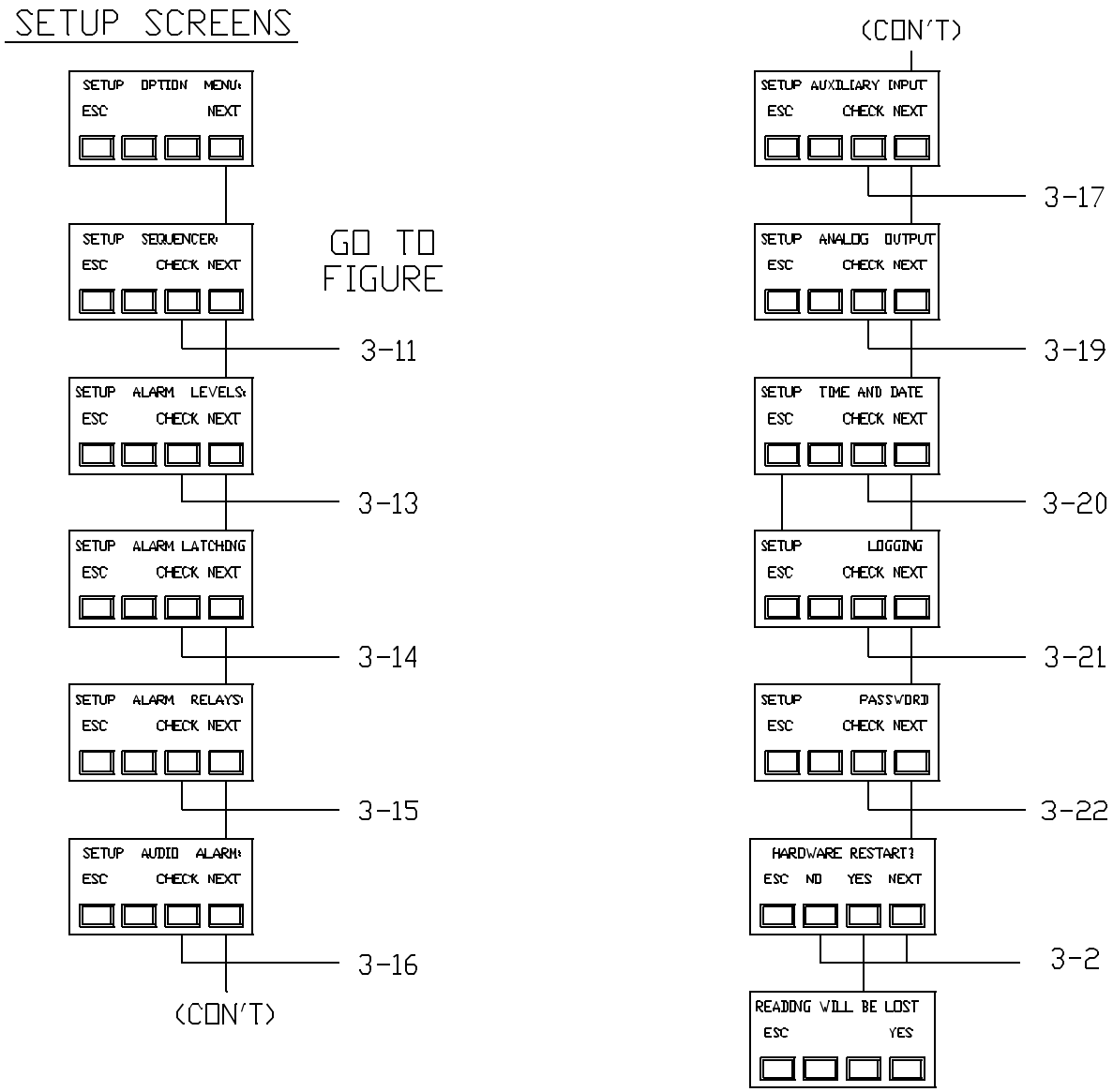

Figure 3-3: Setup Screens

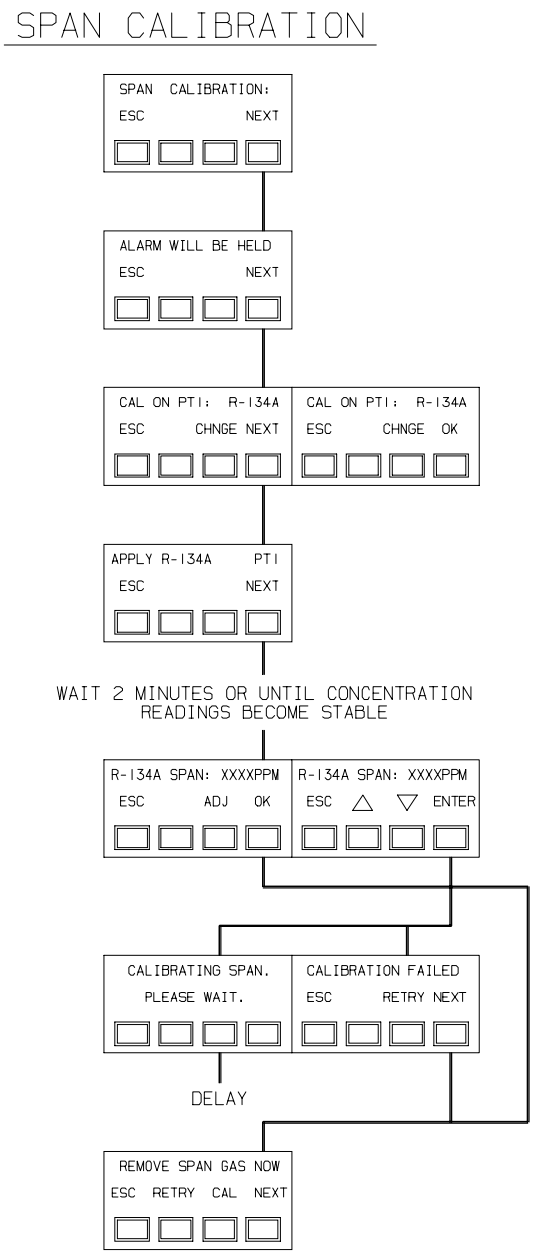

Figure 3-4: Span Calibration

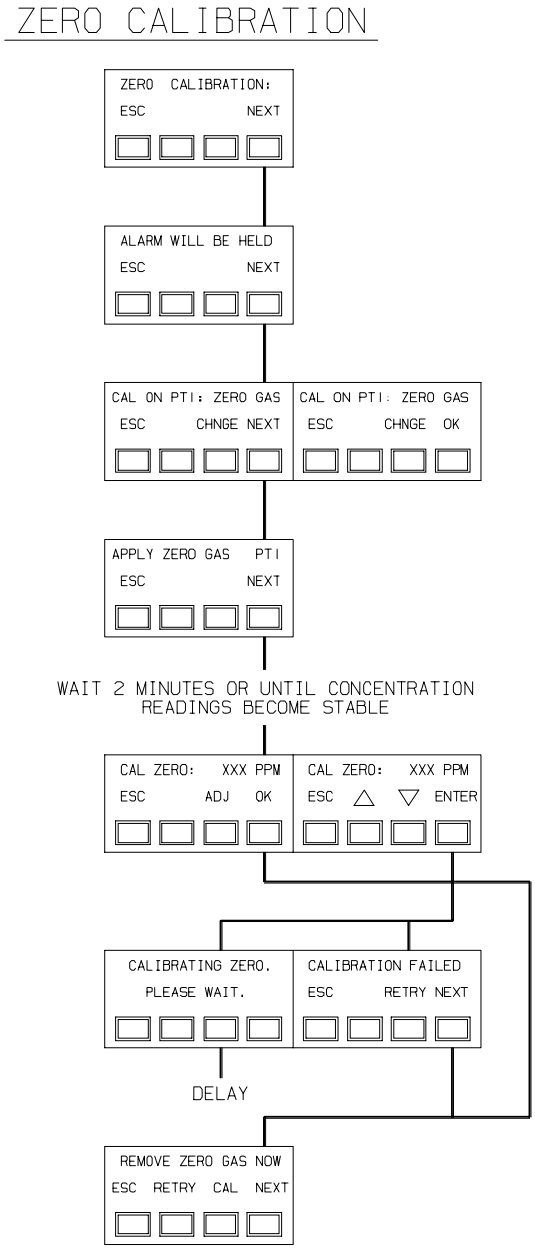

Figure 3-5: Zero Calibration

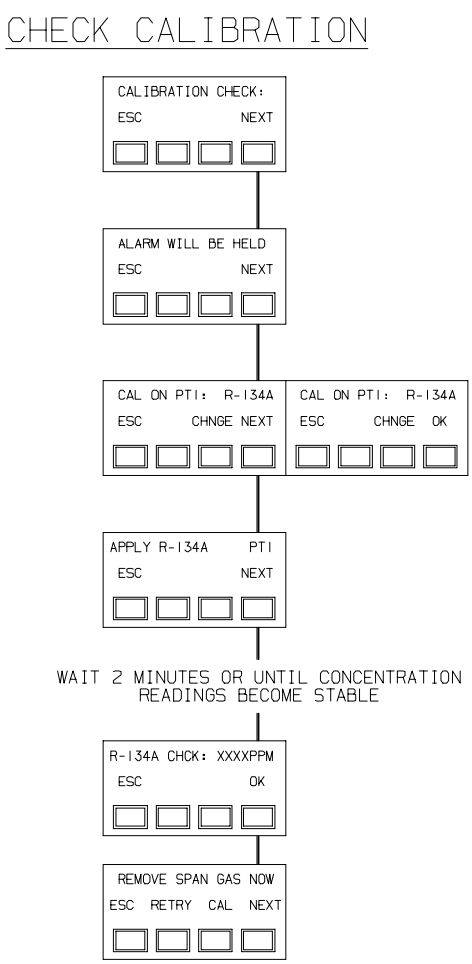

Figure 3-6: Check Calibration

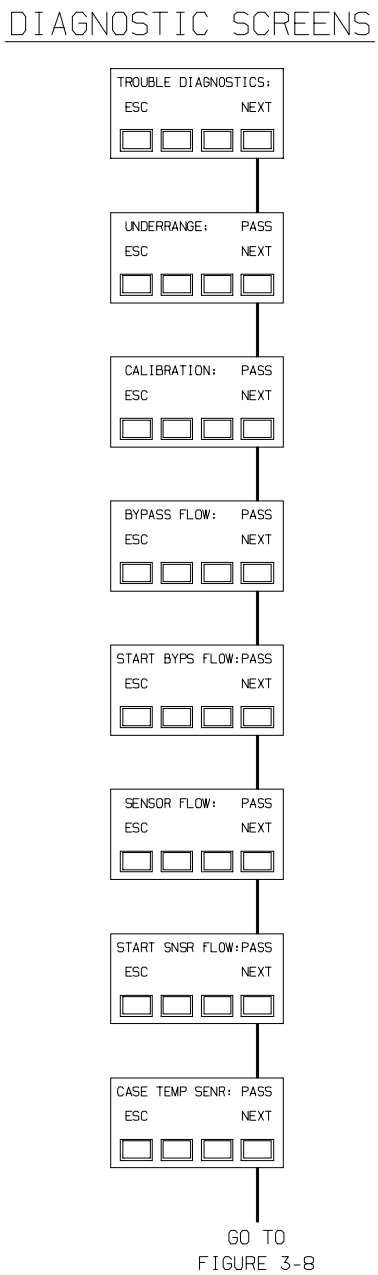

Figure 3-7: Diagnostic Screens

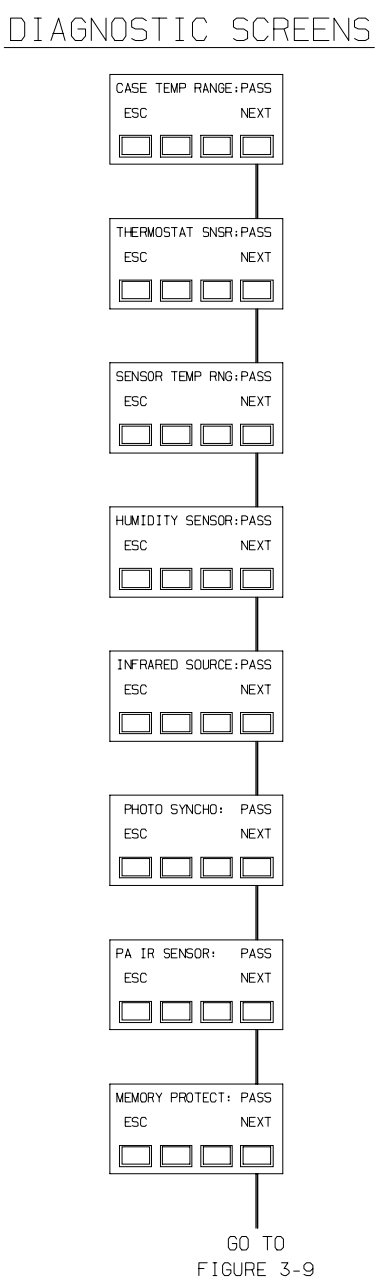

Figure 3-8: Diagnostic Screens

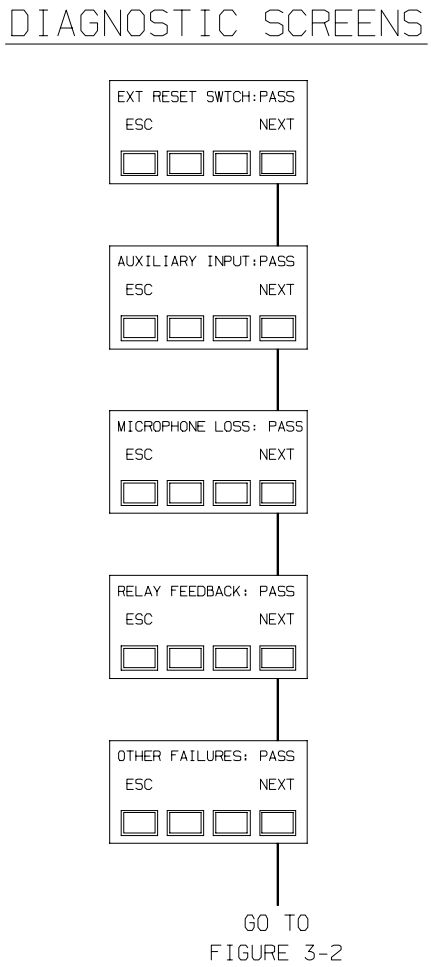

Figure 3-9: Diagnostic Screens

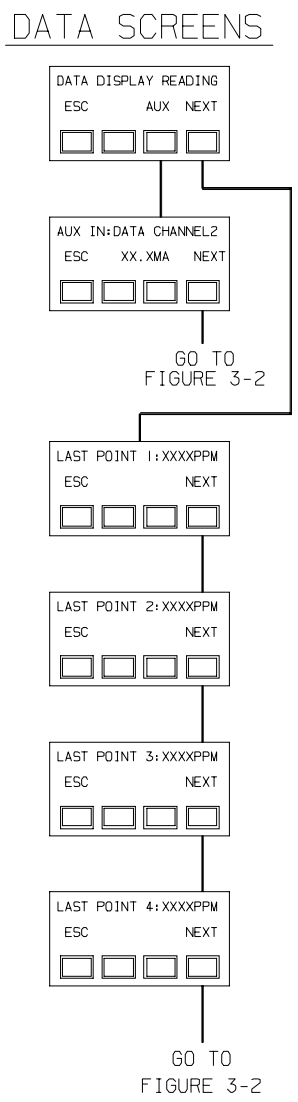

Figure 3-10: Data Screens

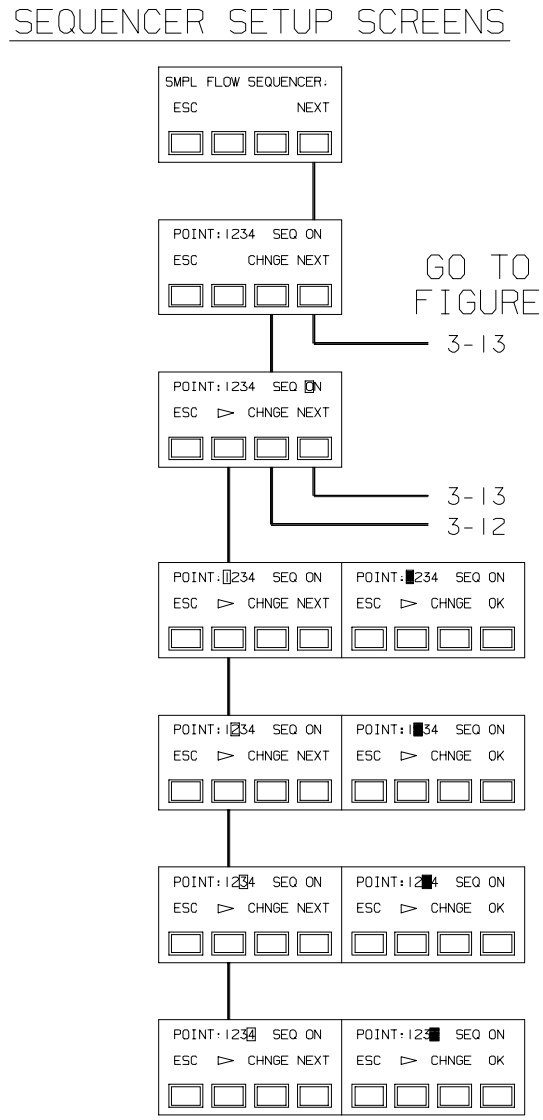

Figure 3-11: Sequencer Setup Screens

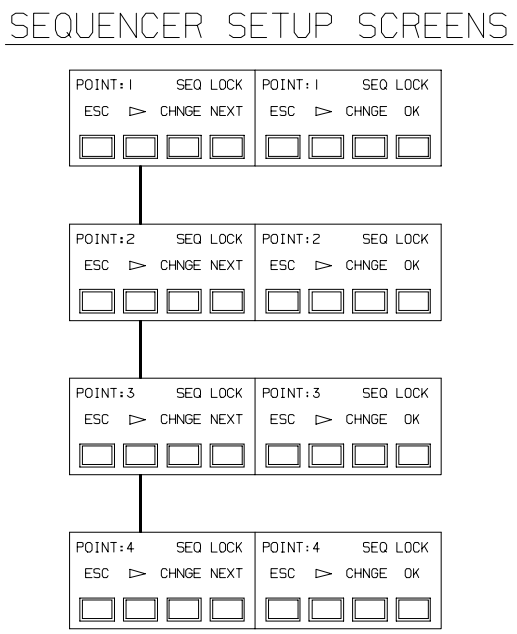

Figure 3-12: Sequencer Setup Screens

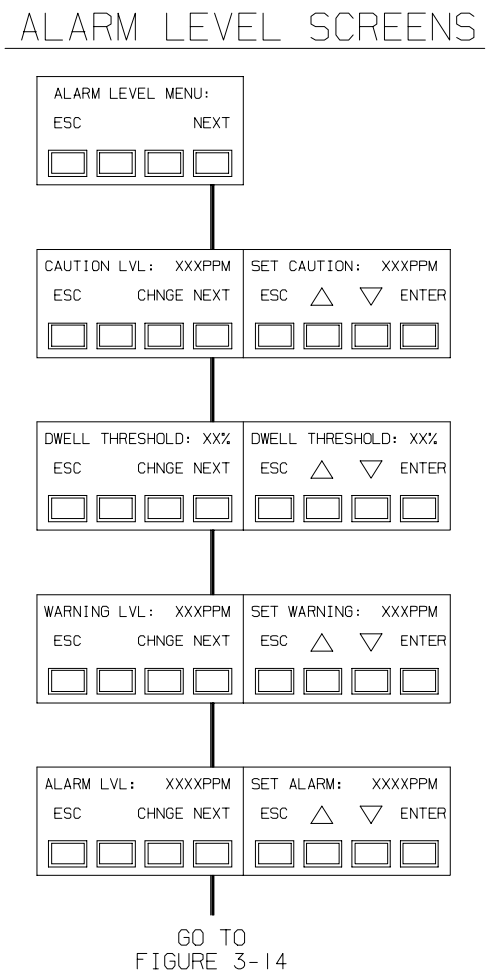

Figure 3-13: Alarm Level Screens

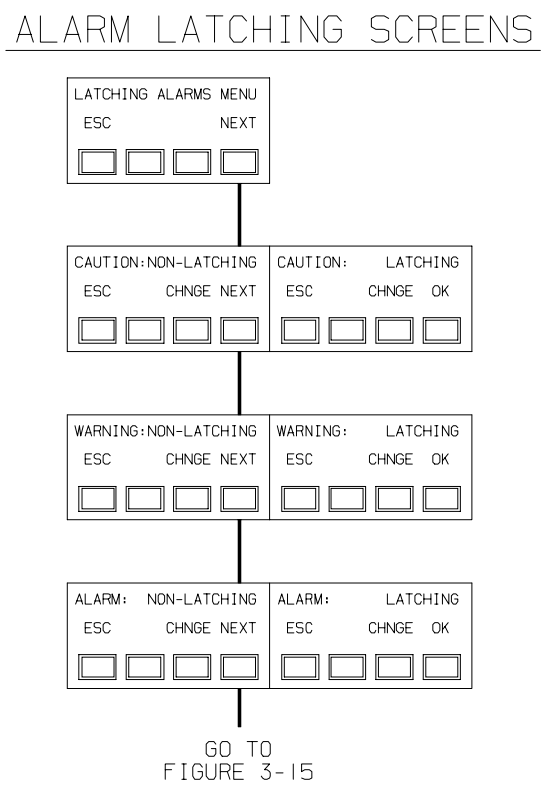

Figure 3-14: Alarm Latching Screens

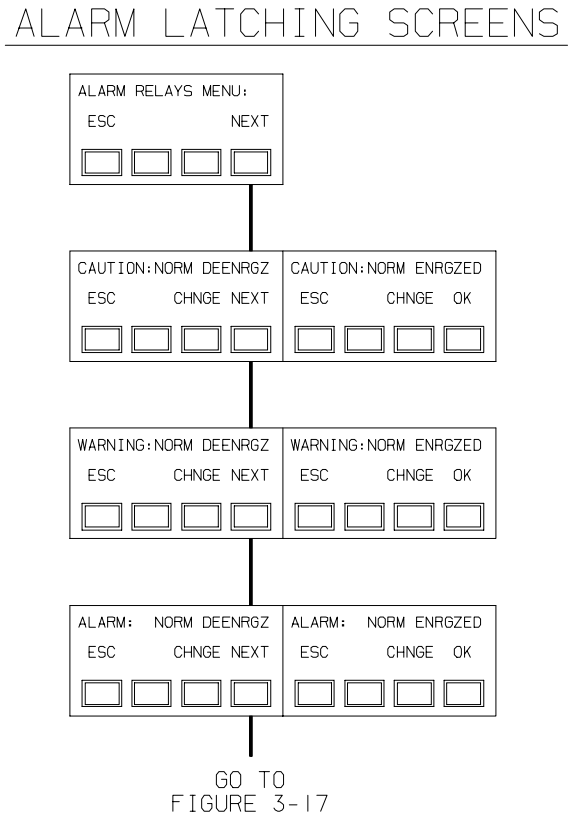

Figure 3-15: Alarm Latching Screens

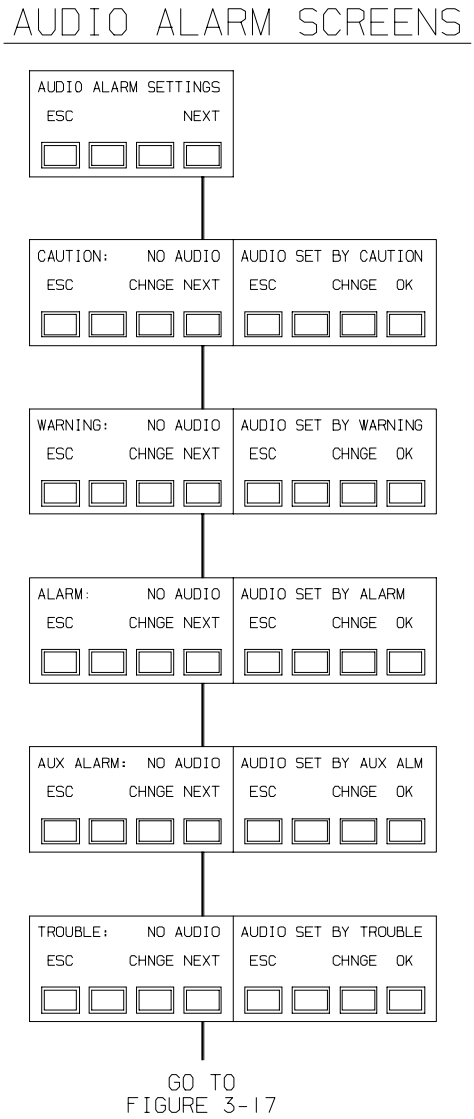

Figure 3-16: Audio Alarm Screens

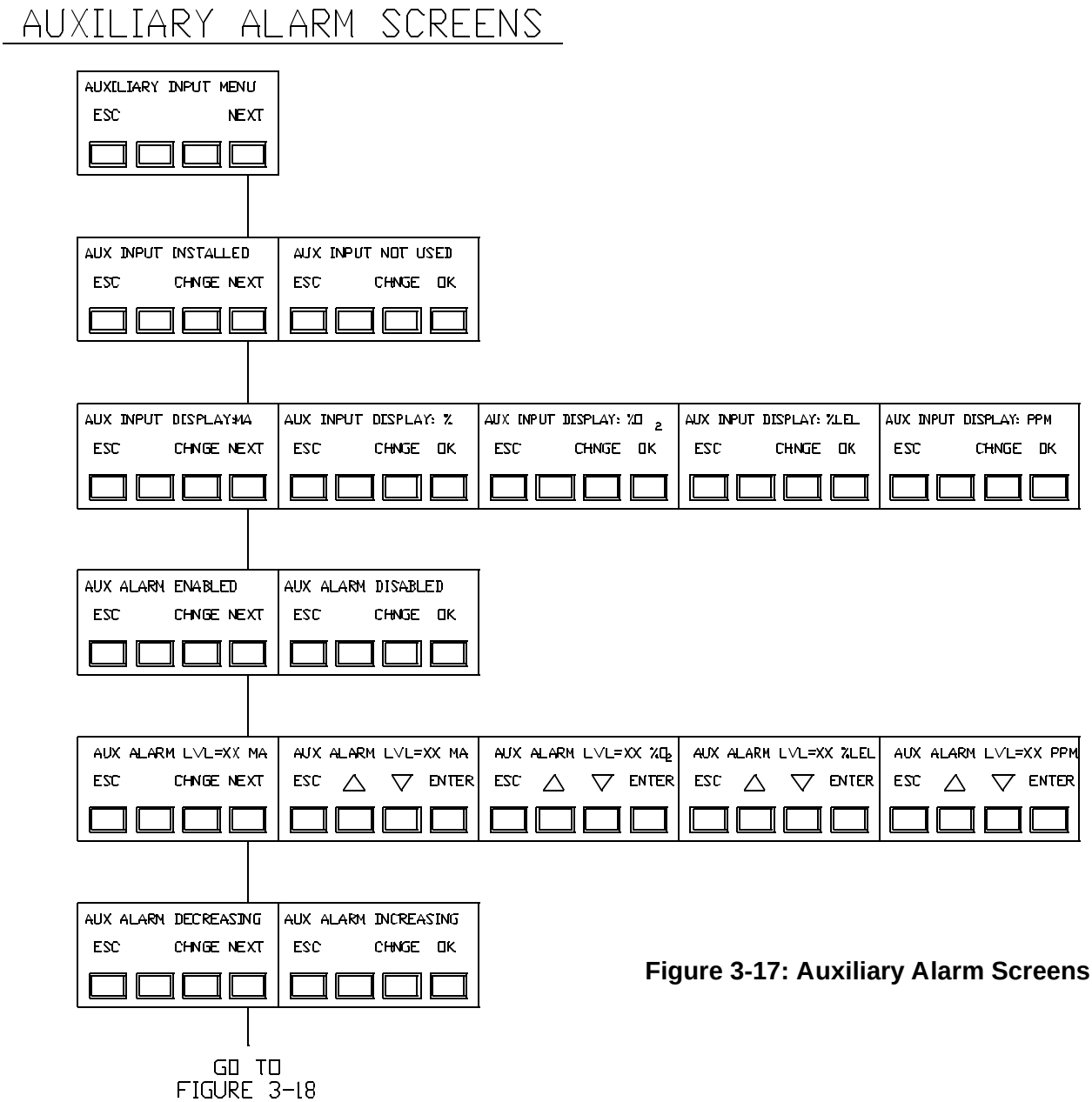

Figure 3-17: Auxiliary Alarm Screens

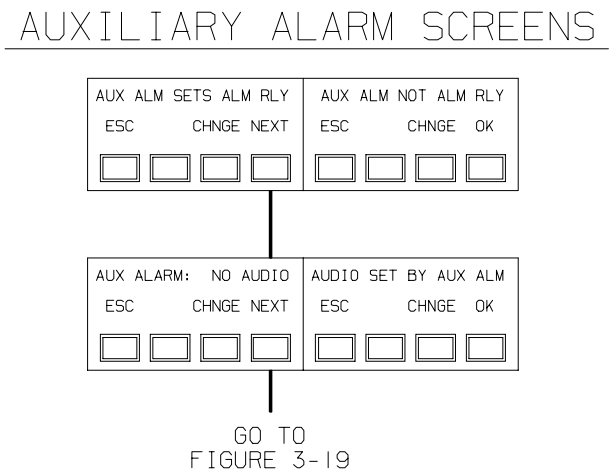

Figure 3-18: Auxiliary Alarm Screens

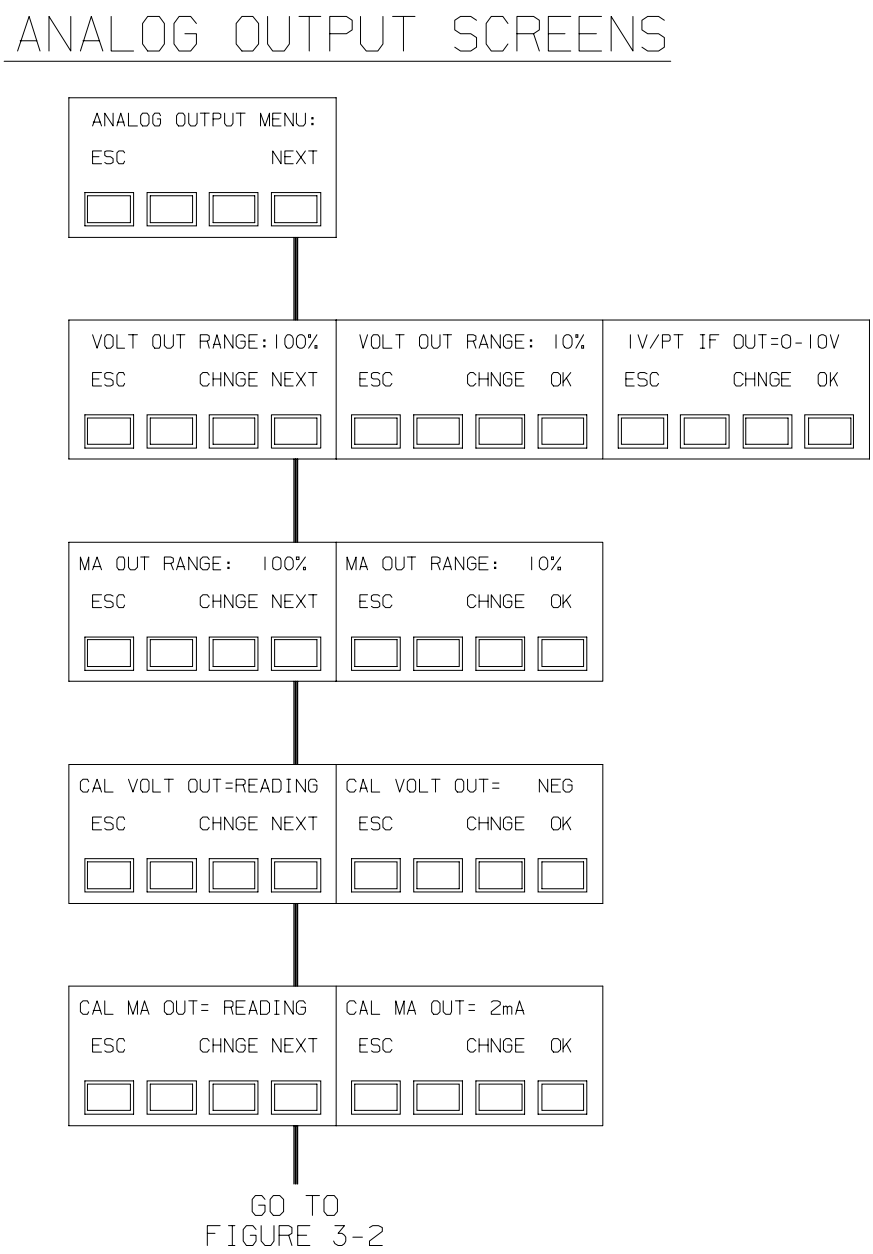

Figure 3-19: Analog Output Screens

CALIBRATION

Calibration testing is required to check the accuracy of the IRIS Unit performance. Performance frequency depends on the operating time and exposures of the sensors. New monitors need to be tested more frequently. When the calibration records stabilize, the frequency of testing can then be reduced to the schedule set by the safety officer or plant manager. All diagnostics appear on the front panel screen; refer to the screen examples in the previous section.

You need the following equipment to calibrate your IRIS:

- Calibration Kit (contact Danfoss/ECI for the Part #)
- A SPAN gas cylinder
- Optional ZERO gas cylinder
  - A ZERO gas cylinder may not be needed.
  - For ammonia units, zero gas cylinder must be used.

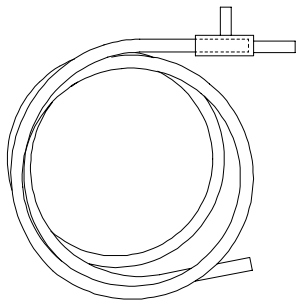

Item 1 - Tube and Tee Assembly

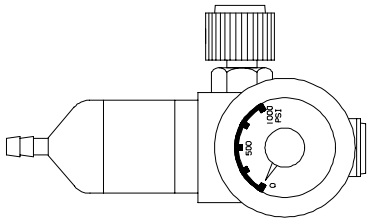

Item 2 - 1.5 LPM Flow Controller

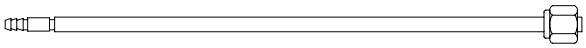

Item 3 - Connector Assembly

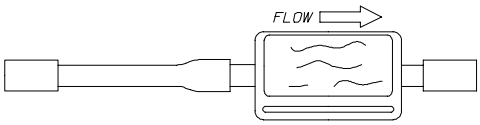

Item 4 – Span Gas Scrubber, Note: Replace protective caps after use

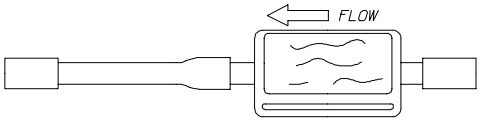

Item 5 – Zero Gas Scrubber, Note: Replace protective caps after use

Figure 4-1: Calibration Kit Components

The Calibration Kit contains a ZERO gas scrubber that can be used in place of a ZERO gas cylinder if the ambient air around the IRIS Unit contains little or no refrigerant.

CAUTION

The zero gas scrubber must be replaced periodically. The frequency of replacement depends on the concentration of the ambient refrigerant vapors.

The SPAN or ZERO cylinders (if needed) may be included with the Calibration Kit; cylinders shown in Table 4-1 are available from Danfoss/ECI.

Table 4-1: RP Calibration Gases

Description	Concentration
R-11 in Nitrogen	100 PPM
R-12 in Nitrogen	100 PPM
R-123 in Nitrogen	100 PPM
R-134a in Nitrogen	100 PPM
R-22 in Nitrogen	100 PPM
Pentane in Nitrogen substitute for ammonia	0.75%
Zero Air for IRIS only	100%
R-11 in Nitrogen	30 PPM
R-12 in Nitrogen	30 PPM
R-113 in Nitrogen	30 PPM
R-113 in Nitrogen	100 PPM
R-114 in Nitrogen	30 PPM
R-123 in Nitrogen	30 PPM
R-134a in Nitrogen	30 PPM
R-22 in Nitrogen	30 PPM
R-500 in Nitrogen	30 PPM
R-502 in Nitrogen	30PPM
R-404a (use R-134a in Nitrogen as substitute)	100 PPM

NOTE

Contact Danfoss/ECI for the order part number of the calibration gases listed in Table 4-1.

IRIS Unit Identification

You must identify your unit as a single point monitor or a multi-point monitor for proper calibration gas connection. Refer to Figure 4-2 for visual examples of single-point and multi-point monitors.

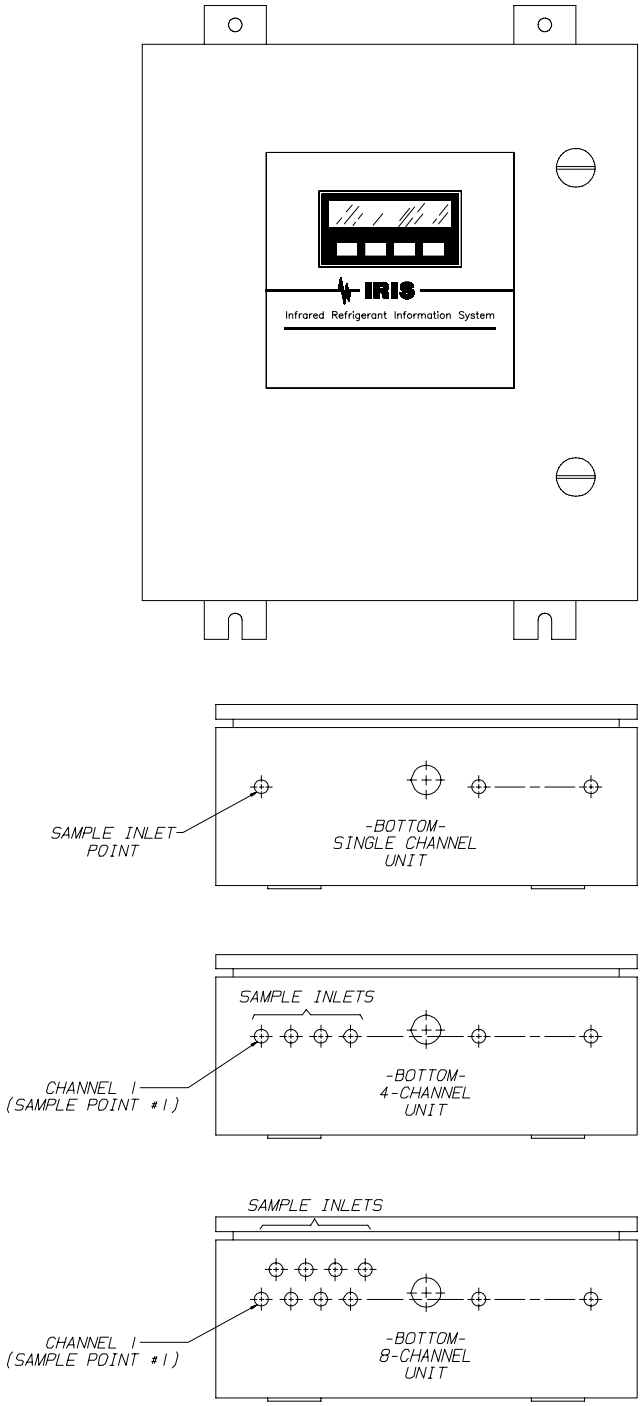

Figure 4-2: IRIS Models

Calibration Procedures

Before calibrating the IRIS Unit, leak check the sample line(s) connected to the monitor.

1. Temporarily block the sample inlet at the end-of-line filter(s) and verify that the monitor gives a trouble alarm.
   - If the monitor is a Multipoint Sequencer, the trouble alarm does not activate until the blocked sampling point is selected by the Sequencer.
2. After checking for leaks, remove the sampling line for the IRIS inlet.
   - On Multipoint Monitors, use sample inlet, Point 1.
3. Attach the Calibration Kit connector assembly to the inlet.
4. Before applying gases, familiarize yourself with the calibration screens by stepping the monitor through the whole sequence. Press the keys in the order shown in Table 4-2.

Table 4-2: Calibration Sequence Screens

#	PRESS	RESULT
1	Any Key	Brings up menu
2	CAL	Brings up Cal Menu
3	USER	Allows Adjustments
4	ZERO	Allows Zero Calibration
5	NEXT	Prompt: Alarms are now off
6	NEXT	Prompt: Sample Point 1 to be used
7	NEXT	Prompt: Apply Zero Gas
8	NEXT	Prompt: Adjust or OK reading
9	OK	Prompt: Remove Zero Gas
10	SPAN	Prompt: Go into SPAN Calibration
11	NEXT	Prompt: Alarms are now off
12	NEXT	Prompt: Sample Point 1 to be used
13	NEXT	Prompt: Apply SPAN Gas
14	NEXT	Prompt: Adjust or OK reading
15	OK	Prompt: Remove SPAN Gas
16	NEXT	Prompt: Alarms are now active
17	NEXT	Returns to normal operation

NOTE

When this sequence is followed with zero and span gases, adjust the zero and span reading (if necessary) in steps 9 and 15 above.

If adjustments are needed, press [ADJ] to access the [UP], [DOWN], and [ENTER] selections; enter the zeroing and spanning adjustments.

Zeroing The Monitor

1. Locate the calibration kit and proper span gas cylinder; then, locate the zero scrubber and attach it as shown in Figure 4-3.

NOTE
USE only the **Zero Gas Cylinder** on **AMMONIA CALIBRATED MONITORS**.

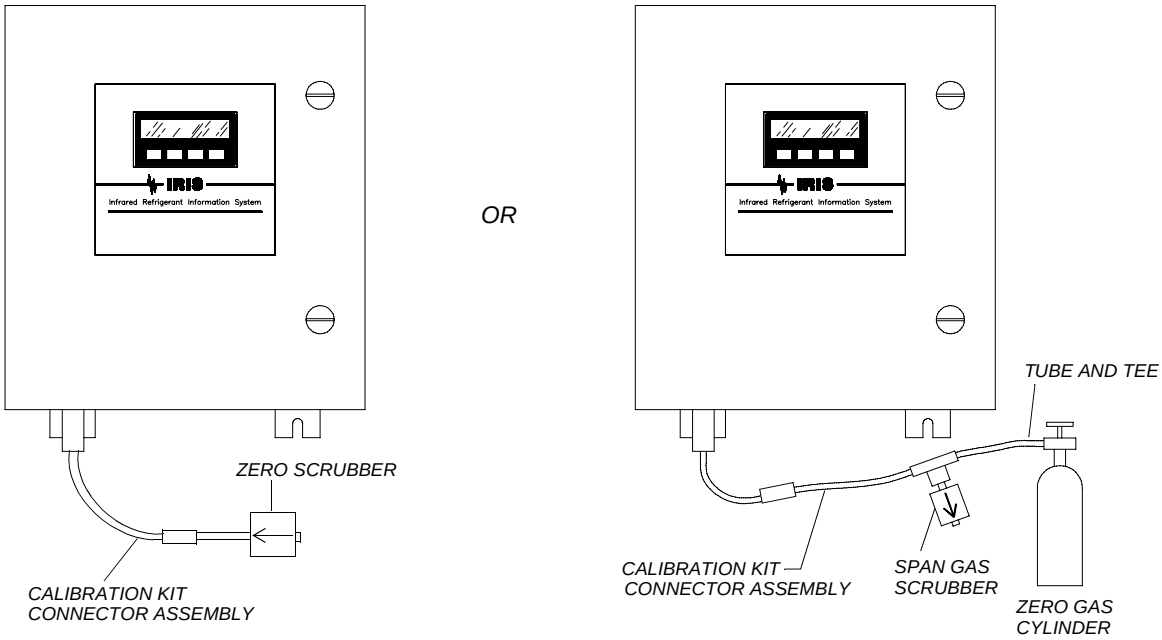

USING ZERO SCRUBBER

USING ZERO GAS CYLINDER

Figure 4-3: Zero Calibration

Spanning The Monitor

1. When span gas is required, a span gas cylinder must be attached to the connector as shown in Figure 4-4.

NOTE

The span gas must be appropriate for monitor calibration. For many applications, a span gas cylinder of the refrigerant of interest is available through Danfoss/ECI. If a span gas cylinder of the specific refrigerant is not available, Danfoss/ECI has determined an appropriate synthetic span gas. See Table 4-1 for calibration cylinders available through Danfoss/ECI. If a synthetic span gas is used (such as pentane for ammonia monitors or R134a for 404a calibration purposes, refer to the calibration label on the inside of the monitor door (Figure 4-5).

Set the unit to the value given on the synthetic span label shown in Figure 4-5.

2. Perform the sequence in Table 4-2.
   a. Apply zero gas when requested.
      - Allow enough time for a stable reading.
   b. Accept (OK) or (ADJ) and enter a zero reading.
   c. Apply span gas when requested.
      - Allow enough time for a stable reading.
   d. Accept (OK) or adjust (ADJ) and enter the correct span reading.
3. Remove the connector assembly and re-attach the sampling line to the monitor inlet.

WARNING

If the sampling line is not reattached, the monitor cannot sample from the remote location.

During calibration, the alarm relays do not activate; ensure that a hazardous condition does not exist when calibrating the IRIS Unit.

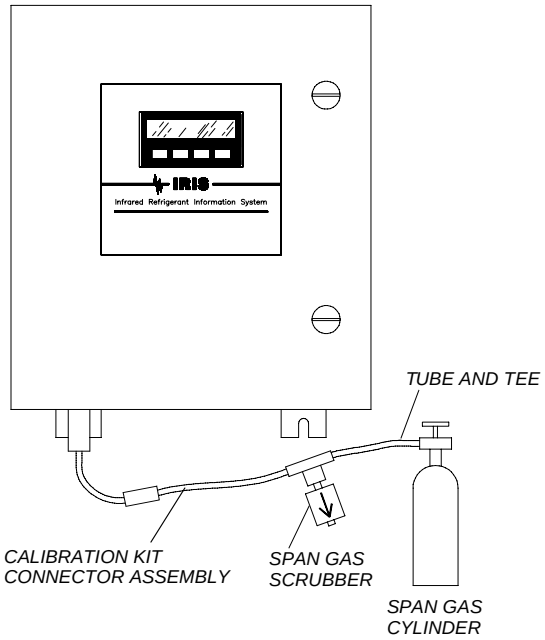

Figure 4-4: Span Calibration

Factory Performance Test/Verification

Calibration Gas Mixture:_____

Synthetic Span:_____

MSA Cylinder P/N: _____

Cylinder Reading: _____

Certified Sensitivity Range:_____

Certified Accuracy:See Installation Literature Specifications

Test Date:_____

Test Reference Number:See Unit Serial Number

Instruction Manual Revision Number:_____

Inspector:_____

Figure 4-5: Ammonia or 404a Unit Calibration

MAINTENANCE

Under normal operation, the IRIS requires minimal maintenance. Be sure to examine the end-of-sample-line filter(s) regularly for dirt/dust build up and replace when necessary. If the filter(s) become severely clogged with dust, the flow rate eventually fails and a flow alarm occurs.

NOTE

The internal end-of-sample-line filters must be inspected periodically.

If the end-of-sample-line filters are used and serviced correctly, they should rarely need to be replaced.

Replacement Parts

To obtain replacement parts, address the order or inquiry to:

Energy Controls International (ECI)
10946 Golden West Dr., Suite 130
Hunt Valley MD 21031

(phone) 410-403-4000, ext. 3289

Subsequent to May, 2001:

Danfoss Inc.
Air Conditioning & Refrigeration Division
7941 Corporate Drive
Baltimore, MD 21236-4925

(phone) 410-931-8250

WARNING

Use only Danfoss/ECI replacement parts when performing any maintenance procedures. Failure to do so may seriously impair unit performance.

Repair or alteration of the IRIS Monitor **beyond the scope of these instructions** or by anyone other than authorized Danfoss/ECI service personnel **could cause the product to fail** to perform as designed. Hence, persons who rely on this product for their safety could sustain serious **personal injury** or **death**.

Table 5-1: IRIS Replacement Parts

PART	PART NUMBER
End of line filter	CC/01703300
Internal filter	Contact Danfoss/ECI
2.0 amp, 250V fuse	Contact Danfoss/ECI
IRIS interface adaptor*	CC/20077400
IRIS Installation Manual*	4464401300
3 foot, 25 pin ribbon cable*	CC/MOD-C
50 foot, 6 conductor flat cable*	CC/01637404
PVC tubing	CC/01703200
Union	Contact Danfoss/ECI
End of line ammonia filter	Contact Danfoss/ECI
Union (ammonia)	Contact Danfoss/ECI
Solenoid, Valve, Ammonia	Contact Danfoss/ECI

TROUBLESHOOTING

TROUBLE	DESCRIPTION	SOLUTION
Unit will not turn ON	No power	1. Check AC power to unit 2. Verify AC power to unit is wired properly 3. Replace L1 and/or L2 fuse. 4. Check for loose wires on terminal barrier input. 5. Check wiring to the unit power supply. Remove power supply cover and check fuse; replace if necessary. 6. Check input cable to main board on left side of power supply. 7. Check for 12VDC power supply output. Connect the DVM negative lead to TP5 and the positive lead to TPSPD1. Adjust Volt 2 pot on the power supply if necessary. 8. Move the DVM positive lead to TPSPD3. The voltage should be 5VDC. Adjust Volt 1 pot on the power supply, if necessary.
Beacon will not light	Beacon alarm	1. Check that plug is connected to circuit board: J10. 2. Verify the audio option is used in the setup screens. 3. Replace beacon assembly.
Under-range failed	Zero limit is minus 10 PPM	1. Adjust display zero to 0.0 via the keypad with zero air or zero scrubber applied. 2. Check the zero air cylinder; replace if necessary. 3. Check the zero scrubber; replace if necessary.
Calibration failed	Coefficients out of range	1. Replace zero scrubber or change zero air supply. 2. Check span gas supply. 3. Check all tubing, filters and fittings for leaks. 4. For sequencer units, make sure the unit is locked on the selected sample port used for calibration. 5. Leak test the flow system. 6. Return to Danfoss/ECI for service.
Bypass flow failed	Leaky or blocked bypass line	1. Remove all input lines to unit. Attach one line at a time to check for bypass input. The line that causes flow failure is the problem; check the end-of-line filter of the line. 2. Check inlet fitting, tubing, orifices, bypass pressure switch, and bypass manifold tubing. 3. Check pressure switch for 4VDC on and off switching. Check cable terminals and plug end at BP/SCN. Replace the bypass pressure switch, if necessary. 4. Check operation of all bypass valves in manifold. 5. Leak test the flow system.
Start bypass flow failed	Leaky or blocked bypass line at startup of unit	1. Same as bypass flow failure. Check as above, turn unit off and restart unit. 2. Leak test the flow system.

TROUBLE	DESCRIPTION	SOLUTION
Sensor flow failed	Leaky or blocked sample line	1. Remove all input lines to the unit. Attach one line at a time to check for sample input. Check all end of line filters. Sample flow failure is always the present point being sampled. 2. Remove the optical bench cover. Check the inlet fitting, tubing, sample filter, tubing to the optical bench inlet fitting, outlet fitting from the optical bench, sample pressure switch, and sample manifold tubing. 3. Check the sample pressure switch for 4VDC ON and OFF switching. Check the cable terminals and plug end at press/sample connector. Replace pressure switch, if necessary. 4. Check operation of all manifold sample valves. Check the optical bench inlet and outlet valves. 5. Check the optical bench inlet and outlet valve connectors on J22 and J21. 6. Leak test the flow system.
Start sensor flow failed	Leaky or blocked sample flow line at unit startup	1. Same as sensor flow failure. Check as above, turn unit OFF and restart unit. 2. Leak test the flow system.
Case temperature failed	Main board component	1. Return to Danfoss/ECI for service.
Case temperature range failed	Case temperature is (0 to 90°C)	1. Return to Danfoss/ECI for service.
Thermostat sensor failed	Controls optical bench inside temperature	1. Replacement of optical bench requires Danfoss/ECI service.
Sensor temperature range failed	Checks for temperature range of (45 to 90°C)	1. Replacement requires Danfoss/ECI service.
Humidity sensor failed	Checks H_20 sensor output	1. Return to Danfoss/ECI for service.
Infrared source failed	Checks the 1 of source assembly	1. Return to Danfoss/ECI for service.
Photo synchro failed	Checks the chopper for operation	1. Return to Danfoss/ECI for service.
PA IR sensor failed	Checks the sensor microphone for output	1. Return to Danfoss/ECI for service.
Memory protect	Checks checksum	1. Return to Danfoss/ECI for service
External reset failed	Checks the external reset button	1. If not used, check for jumper between RST minus RST plus on J16. 2. If used, verify switch is wired normally closed.
Display failure	Display communications	1. Check RS485 connector on J15, terminals 1 and 2. 2. Check for broken or cracked display. 3. Remove rear panel cover and check cables between the display and the display board.
Audio alarm failure	Audio alarm	1. Check output terminals 6 and 7 on J17. 2. Check for faulty horn buzzer.

APPENDIX A: CHECK LIST

Before applying power to the IRIS Unit, check for all of the items in the following table.

ITEM	CHECK FOR	CHECKED/ INITIALED
1	Proper mounting of IRIS Unit on a non-vibrating surface that does not block the front panel. Mounting must be away from direct solar heating	
2	Correct electrical connections and wiring to IRIS Unit. Wiring must be done for proper voltage.	
3	Proper tubing for sample line.	
4	Removal of all caps and plugs at sample line inlets and exhaust.	
5	Proper end-of-line filters installed.	
6	Disabling of unused sampling points.	
7	Possession of proper calibration kit and check gases for calibration.	
8	An established routine calibration schedule.	

APPENDIX B: RS232 OUTPUT

Remote Gas Sampling Channel Identification

IRIS Unit Monitors have two analog outputs:

- 4-20mA
- 0-10V

The voltage output can be programmed to correspond to the channel presently being sampled. The front panel screen indicates:

1V/PT IF OUT = 1-10V

(1 volt per point if output equals one to ten volts.) When enabled and the unit is monitoring from:

- Channel 1, the voltage output is one volt
- Channel 2, the voltage output changes to two volts

Table B-1: Voltage Output Corresponds to Channel

CHANNEL NUMBER	VOLTAGE OUTPUT
1	1
2	2
3	3
4	4
5	5
6	6
7	7
8	8

During unit setup, configure the voltage output to stepping, thus enabling the voltage output to reflect the channel being sampled.

Password Protection

To prevent accidental reconfiguration or discourage unit tampering, a password entry can be enabled. This password prevents setup values from being changed. If the password entry is selected, the user must enter three alphabetic characters before any additional information is available.

The password feature is especially useful when a Remote Front Panel is connected to the IRIS Unit. The Remote Front Panel or the IRIS Unit may have no password or it may have a different password.

To enable this feature, a switch on the front display card must be set. This switch is under the metal cover. To set this switch:

1. Open the front door of the unit.
2. On the inside of the front door, locate the four front cover nuts securing the metal cover (Figure B-1).

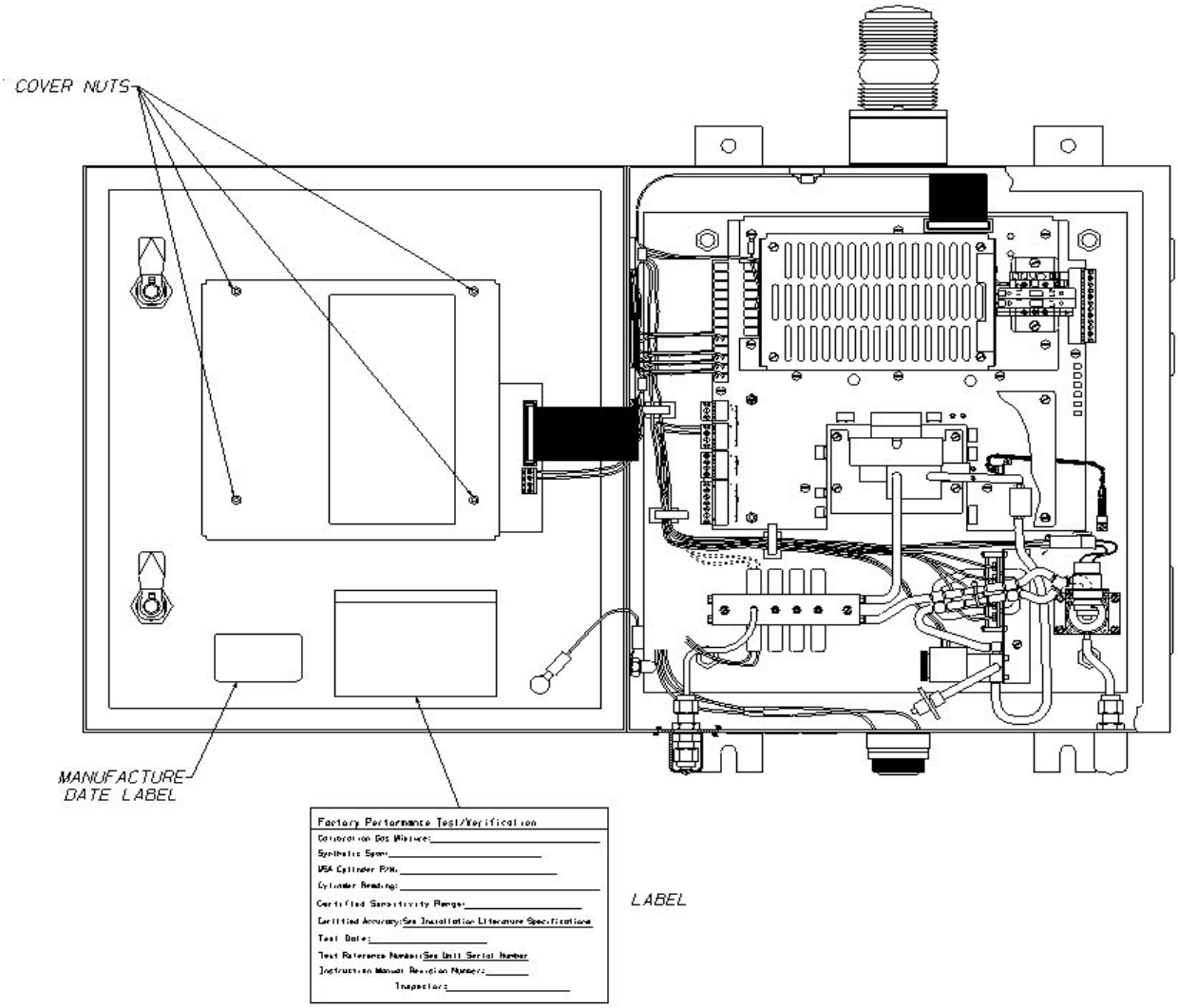

Figure B-1: Access To Switches

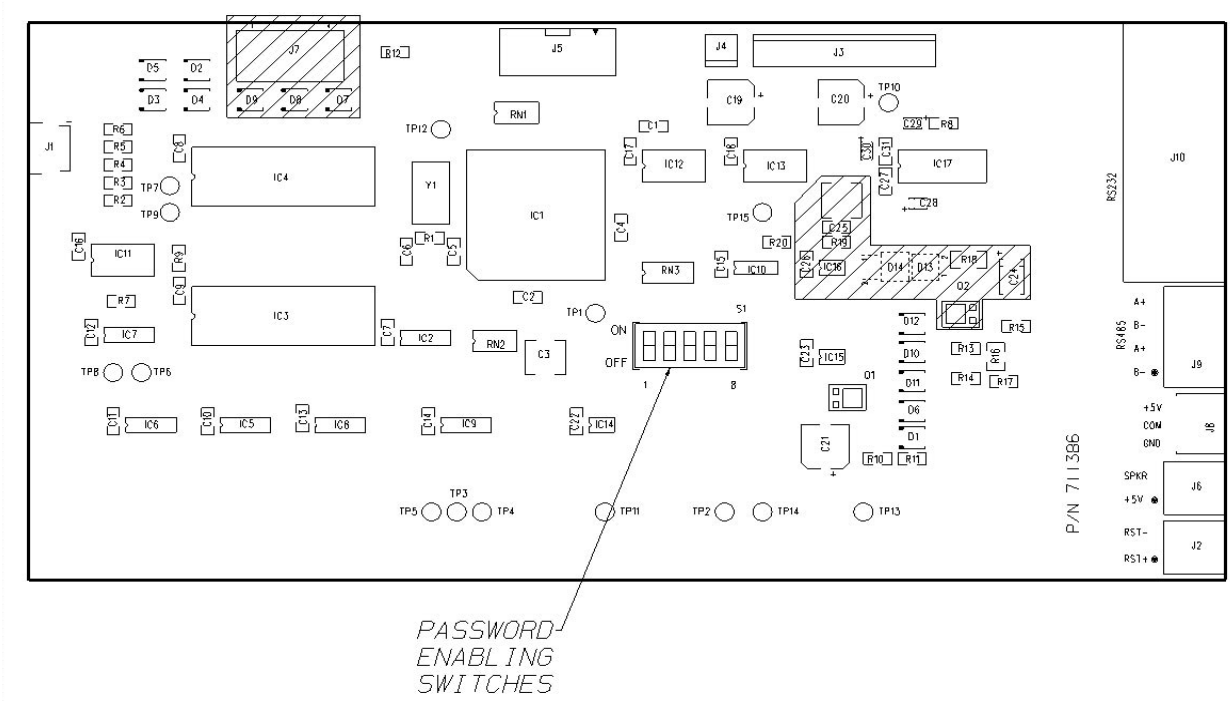

Figure B-2: Switch Bank Locations

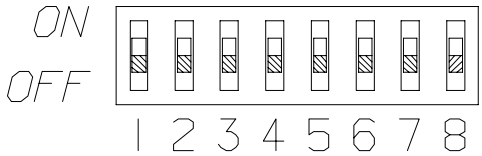

Figure B-3: Password Enabling Switches

3. Unscrew and remove these four front cover nuts and lift off the metal cover.

4. Locate the bank of switches on the printed circuit board exposed when the front cover is removed (see Figure B-2).

5. Each switch is labeled with its number and its position. Figure B-3 also shows the switch bank with its numbered switches.

   - Each switch in this bank activates a different feature
   - Table B-2 describes each switch and its function.
   - Read, mark and initial each function you are going to use.

6. To enable the password option, set switch 1 to the ON position.

7. To set or change the password, put switch 2 in the ON position.
   - The front panel display shows
     - The word SET
     - The new password

To change the password, press three buttons on the front panel.
   - The password is the last three letters displayed on the front panel display.
   - The button sequence is stored when ENTER is pressed.

After selecting the password, return this switch to the OFF position.

NOTE

The password must be reentered when:
- The unit is deenergized
- A bad or wrong password is entered
- A loss of communications is detected between the IRIS Unit and any optional Remote Front Panel
- No password is entered within the last hour.

8. Switch position 3 allows the following without entering the password:
   - Resetting latched alarm relays
   - Silencing the audio output

When setting Switch 3 to the ON position while an audio alarm or a latched relay can be reset, the following message displays:
   - MAIN RESET ALARM

9. Switch 4 enables communication between the IRIS Unit and a remote display.
   - When a loss of communication occurs with the Remote Display within 3-5 seconds, the following message displays:
     - LOSS OF COMMUNICATION.
   - This switch position also allows the Remote Display speaker to follow the IRIS Unit speaker operation.

10. Switch 5, in the ON position, allows the audio output to automatically reset if the IRIS Unit Monitor audio output is reset.
    - Normally, if the Remote Display audio output is energized, it is latched ON until any panel key is pressed.

Table B-2: Function of Switches

SWITCH	SWITCH POSTION	DESCRIPTION	INITIALS
1	ON	Enables the password option	
1	OFF	Disables the password option	
2	ON	Set the password	
2	OFF	Normal operation	
3	ON	Resetting alarm without the password	
3	OFF	Password is necessary to reset alarms	
4	ON	Remote front panel connected	
4	OFF	No remote front panel connected	
5	ON	Allows the audio output to automatically reset	
5	OFF	Manual resetting of the audio output	
6	ON	Not used	
6	OFF	Not used	
7	ON	Not used	
7	OFF	Not used	
8	ON	Not used	
8	OFF	Not used	

APPENDIX C: MULTI-REFRIGERANT CAPABILITY

NOTE
Multi-refrigerant capability has been evaluated by Underwriters Laboratory (UL), Inc. for the gases listed under the Multi-Refrigerant IRIS Unit Specifications section in this Appendix. Note, however, that multi-refrigerant capability for the IRIS Unit has not been UL evaluated.

Introduction

The IRIS Unit is available with the capability to detect up to six different refrigerant gases. This capability is used when multiple chillers using different refrigerants are located together or in separate machinery rooms. Only one IRIS Unit is necessary. This reduces the initial expense as well as installation, wiring, and cost of ownership expenses.

The IRIS Unit is ordered and built for particular refrigerants. It is ready to monitor; however, it needs to be configured for your specific operating requirements.

The IRIS Unit contains an internal Multi-Point Sequencer, enabling your unit to sample from up to eight individual sampling locations. Each sampling point of the Multi-Point Sequencer must be assigned one of the refrigerant types. This allows the unit to correctly detect and compute the proper readings for the gas type specified for that point.

The IRIS Unit also contains several other features, as described in Appendix C. They include RS232 output, password protection, remote relay capability, remote front panel capability, and sampling point identification.

Specifications/Multi-Refrigerant Iris Unit

Typical Refrigerant Gases Detected (UL Approved) *(Other gases available upon request but not evaluated by UL)*	R-11 R-12 R-22 R-114 R-123 R-134a R-113 R-404a R-500 R-502
Temperature Effect	±0.3%/°C of reading for 0 to 35°C ±0.6%/°C of reading for 35°C to 50°C
<u>Response Time:</u> 500 ft. (167m) of sampling tubing length	13 minutes for a 90% step change
150 ft. (50m) of sampling tubing length	105 seconds for a 90% step change

Table C-1: Typical Cross Sensitivity at 100 ppm at 25ºC for the IRIS Unit Calibrated at 1000 ppm R11 as Expressed in Response Factors

Refrigerant Selected	Response Factor	100 PPM Applied
R11	1.00	100
R12	0.54	54
R22	1.07	107
R114	0.53	53
R123	1.09	109
R134a	0.99	99

Identifying Your Unit

After your unit is installed, open the front door and locate the Calibration Label (Figures C-1 and C-2). Also see the Manufacturing Date Label (Figures C-1 and C-3).

If the IRIS Unit is built with multiple refrigerant gas capability, the calibration label shows what gases the unit can detect. Since it is possible to put up to six different gases on the unit, it is important to correctly install the sampling tubing and to identify which gases will be detected on each sampling point.

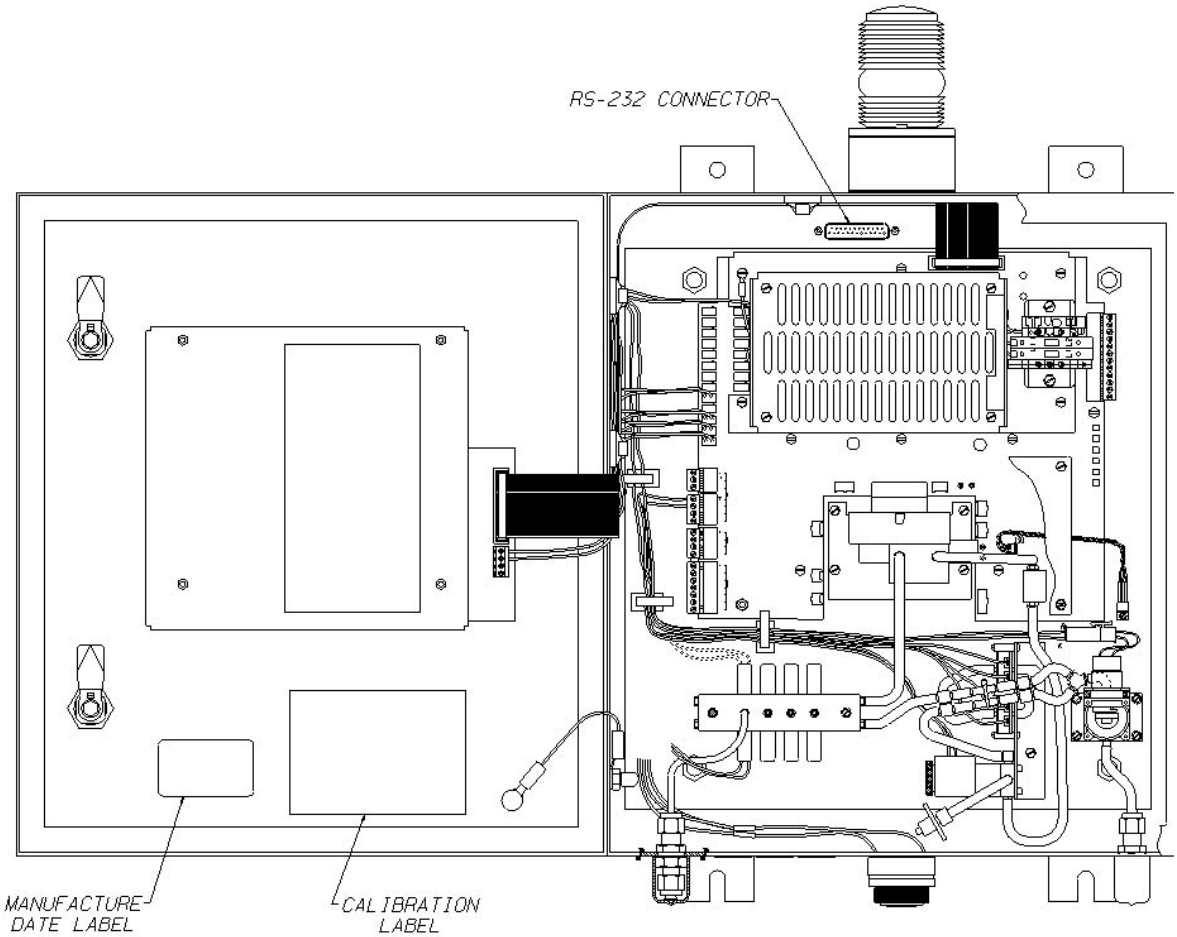

Figure C-1: Label And RS232 Location

BENCH TYPE	BENCH S/N		UNIT S/N			
A ZERO COEFF		H ZERO COEFF				
GAS TYPES						
A SPAN COEFF						
A POLY COEFF						
H COMP COEFF						
T ZERO	T SPAN		T POLY			
V ZERO COEFF		V SPAN COEFF				
I ZERO COEFF		I SPAN COEFF				

Factory Performance Test/Verification

Calibration Gas Mixture:_____

Synthetic Span:_____

MSA Cylinder P/N:_____

Cylinder Reading:_____

Certified Sensitivity Range:_____

Certified Accuracy:See Installation Literature Specifications

Test Date:_____

Test Reference Number:See Unit Serial Number

Instruction Manual Revision Number:_____

Inspector:_____

Figure C-2: Calibration Label & Manufacture Date Label

Installation

Install the IRIS Unit according to the Installation Setup section of this manual.

NOTE
When installing a multi-refrigerant capable IRIS unit, do not connect any sampling lines to the unit at this time.

Initial Setup

The IRIS Unit with multiple refrigerant detection capability must be programmed at installation. This allows the unit to respond correctly to the gas expected at each particular sampling point. During setup, a menu option relates each sampling point to one of the gases that the instrument is capable of detecting.

WARNING
The IRIS only reports proper gas readings if the particular gas selected to be monitored at each sampling point is actually present at that point. If another refrigerant that the IRIS Unit is capable of monitoring enters the sample line, the reading will not be accurate.

After installing the IRIS Unit according to the instructions in this manual, determine which refrigerant gas is likely to enter each sample line. Mark each sample line and place the sample tubing on one of the inlet ports.

See Figures 3-1 through 3-12 and Figures 3-15 through 3-19 for proper setup.

NOTE
Also see Figures C-4 through C-6 for Gas by Point Setup Screens and Alarm Level Screens (all other operating characteristics of the IRIS Unit remain unchanged.)

Calibration

It is only necessary to calibrate the instrument with one gas, even though the IRIS Unit with multiple gas detection capability can respond to up to six different refrigerant gases. Calibrate the instrument according to the instructions in this manual.

The only variation of the calibration procedure for the multi-gas IRIS Unit is to apply span gas to only one of the sample points. The particular sampling point chosen must be configured to monitor that particular gas. During the calibration process, the span values of the other channels or gases are corrected appropriately.

Display Screens

The IRIS Unit with multiple gas detection capability uses display screens which differ slightly from the standard unit. The different display screens are in the setup of the sequencer section of the instrument. The screens in this section allow the user to define the refrigerant gas that is expected at each sampling point. Also, they determine which refrigerant gas is used for calibration by selecting the sampling point configured for that particular gas.

Following are sample screens that differ from the screens found in *Section 3, Display Screens* earlier in this manual.

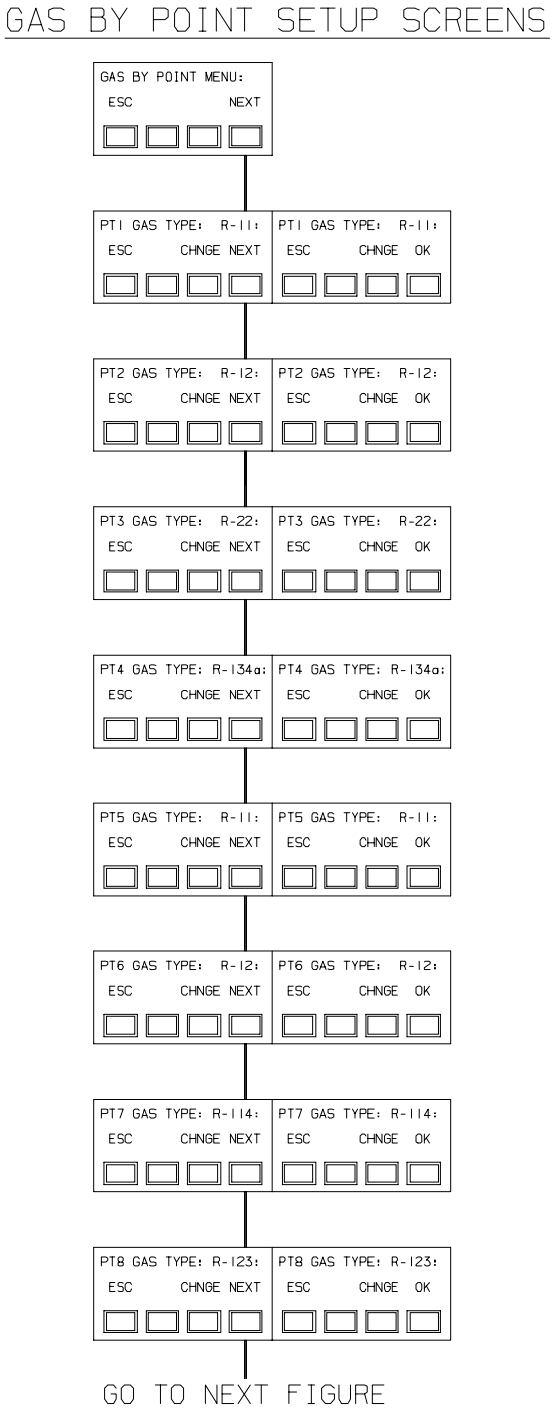

Figure C-3: Gas By Point Setup Screens

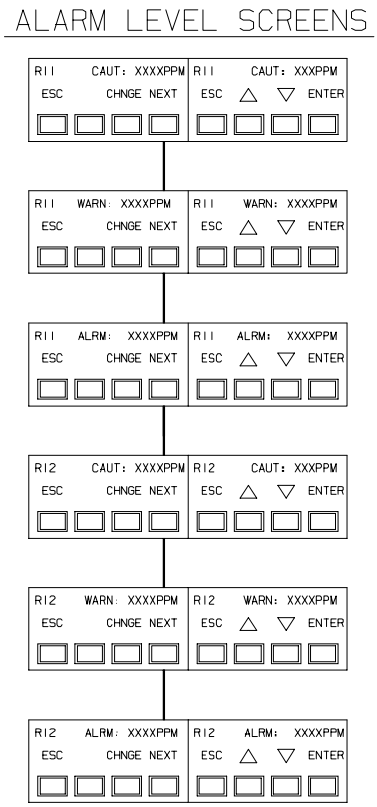

Figure C-4: Alarm Level Screens

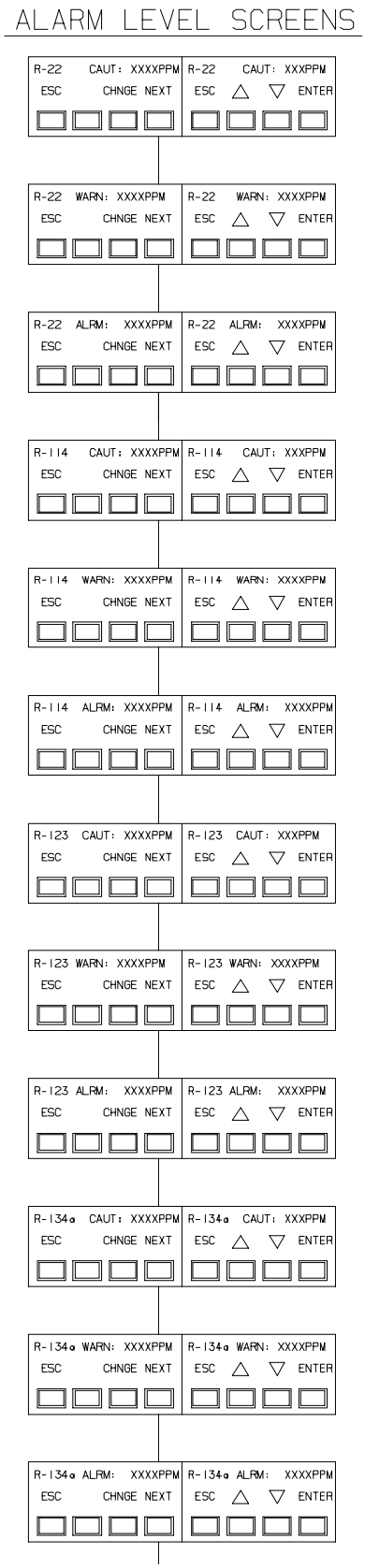

Figure C-5: Alarm Level Screens

10946 Golden West Drive
Suite 130
Hunt Valley, MD 21031
Telephone (410) 403-4000
Fax (410) 584-2664
Internet www.ecintl.com

Subsequent to May 2001:

Danfoss Inc.
Air-Conditioning & Refrigeration Division
7941 Corporate Drive
Baltimore, MD 21236-4925
Telephone (410) 931-8250
Fax (410) 931-8256
Internet www.danfoss.com

Subject to change without notice • Printed in the U.S.A.