Danfoss

Form No.: 446440410
Release: Rev. E
Date: May 25, 2001
Supersedes: Rev. D, 12/6/2000

NoSweat Controller
Installation and Operations Manual

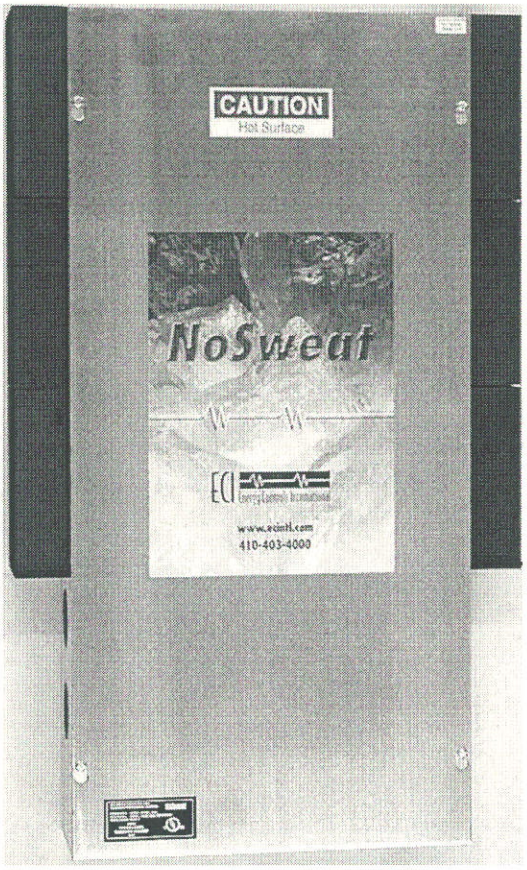

Form No. 446440410
Release: Rev. E
Date: May 25, 2001
Supersedes: Rev. D, 12/6/2000

NOTE

Energy Controls International (ECI), formerly an ECI Group company, has been acquired by Danfoss Inc., a global leader in refrigeration controls, motion controls, and heating & water controls.

©2001 Danfoss Inc.
All rights reserved • Subject to change without notice • Printed in the U.S.A.

Table of Contents

Table of Contents i

INTRODUCTION 1
Specifications 2
Dimensions 2
Weight 2
Operating Environment 2

HARDWARE OVERVIEW 3
Installation 3
Cabinet Mount Option 3
Multiple Cabinet Connections 3
Remote Mount Option 3

ERC-1000 ANTI-SWEAT HEATER CONTROL 4
Analog Anti-Sweat Heater Control 4
ERC-1000 Control 4
Anti-Sweat Heaters Status Screen 4
Anti-Sweat Heaters Setpoint Screen 4
Anti-Sweat Heaters Names Screen 5
Anti-Sweat Heaters Sensor Names Screen 5
Anti-Sweat Heaters Configuration Screen 5

NoSweat Hookup Diagram 6

INTRODUCTION

The NoSweat controller is a dedicated anti-sweat control panel for supermarkets and cold storage warehouses. Together with an environmental controller, it prevents condensation from forming on refrigeration unit fronts, such as glass doors or metal fixtures. Store dew point dictates the activity of the NoSweat, and, consequently, the output of the ASH heaters that it controls. Functional advantages of the NoSweat include the absence of fans, mechanical devices, and filters. The NoSweat is zero cross-over fired to eliminate RFI (noise) generation. It may be remote or cabinet mounted.

A driver board, receiver boards, and triacs function as the control mechanisms of the NoSweat device. Input signal flows from an environmental controller to them to control the activity of the ASH heaters. The driver board accepts dew point input from an environmental controller, in the form of a 0-10V analog signal, and passes it on to the receiver boards. The input flows from the receiver boards to the triacs, controlling the switching of ASH heating elements in cases.

The standard NoSweat controller possesses four heat sinks (for thermal dissipation), eight triacs, eight receiver boards, and four terminal blocks. The cabinet accommodates up to four additional two-group heat sinks, providing sixteen control points per cabinet. This expanded configuration is shown in Figure 1, below.

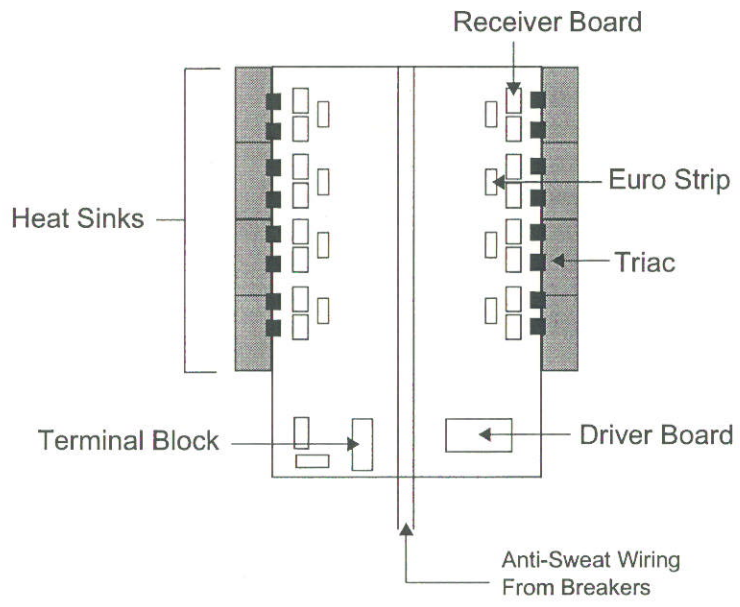

Figure 1: NoSweat Controller with Components

Specifications

Dimensions

Cabinet Enclosure (with heat sinks)	16.5" width x 27.0" height x 5.0" depth
Heat Sink	1.75" width x 4.125" height x 6.0" depth

Weight

Cabinet Enclosure and 8 Two-Group Heat Sinks	28 lbs.

Operating Environment

Ambient Limits	95°F non-condensing
Mounting Guidelines	Allow for adequate air flow at the top and bottom of unit
Operating Parameters Power Requirements	120VAC
Wiring	18 gauge/remote receivers, High voltage switching loads are per NEC standards.
Maximum Distance	5000 feet
Inputs	0-10V: 0 = off; 10V = 100 % on
Outputs	16 amp/120V switching load/channel

HARDWARE OVERVIEW

The NoSweat controller is made up of the following hardware components:

- Cabinet
- Heat sinks (two-group configuration)
- Triac(s), maximum of 16 per cabinet
- Receiver board(s), maximum of 16 per cabinet
- Euro strip(s)
- Snap track
- 24V transformer, Class II
- One amp fuse
- Terminal block (input voltage)
- Wireway

The aluminum cabinet houses the driver board, receiver board, triacs, and the Euro strips. The heat sinks line the outside of the unit and are factory installed. The cabinet supports a maximum of eight heat sinks; it must have a minimum of four installed.

Input voltage is connected at the terminal block in the cabinet. The triac, an electronic component, turns the ASH heating element in a case on and off. Each cabinet houses up to 16 triacs; the NoSweat supports up to 50 triacs per driver board. A snap track is provided inside the cabinet for easy installation of the receiver boards. Each heat sink has two 16 amp loads. The heat sinks provide thermal dissipation for the NoSweat controller.

The NoSweat uses a 24V, Class II transformer and a 1A input fuse. They are factory prewired.

Installation

Cabinet Mount Option

The cabinet mount option centralizes anti-sweat control and reduces field wiring.

All connections **inside** the enclosure are factory prewired. The inside connections include input signal and input voltage to the driver board and the anti-sweat output to the receiver board.

The **outside** connections are made from the top or bottom of the enclosure. They require field installation.

- Connect the 0-10V output signal from the environmental controller at the TB1 connection on the driver board *(see installation diagram)*.

- To power up the NoSweat unit, connect the incoming wire from the unit circuit breaker at the load (L), neutral (N), and ground (G) connections on the terminal block *(see installation diagram)*.

- To add additional loads to the NoSweat controller, remove the vent plugs from the cabinet enclosure and install a heat sink (two-group configuration), receiver board, and Euro strip for each load.

Multiple Cabinet Connections

If your configuration consists of more than sixteen receiver boards, you will need a second cabinet.

NOTE

To connect multiple cabinets, daisy chain from the last receiver board of cabinet 1 to the first receiver board of cabinet 2; this connection CANNOT BE BROKEN.

If using more than 32 receiver boards, you will need a third cabinet. The NoSweat driver board supports a maximum of fifty receiver boards. The receiver board to receiver board connections are made at the TB1 connector. Use 18 gauge wire. The maximum distance from the first receiver board to the last cabinet is 5000 feet.

Remote Mount Option

A remote mount option is also available for the NoSweat controller. It enables customized installation.

IMPORTANT

If you choose the remote mount option for the NoSweat controller, contact your Sales Representative for more information.

ERC-1000 ANTI-SWEAT HEATER CONTROL

Analog Anti-Sweat Heater Control

Anti-sweat heater control is achieved through a comparison of actual dew point vs. programmable high/low setpoints. This comparison is made by an environmental controller, such as the ERC-1000. A 0-10V analog output module transmits dew point data from the ERC-1000 to the driver board of the NoSweat unit, which then controls the receivers. An elevation of store dew point increases the [ON] time of the controller; conversely, a declination of store dew point decreases the [ON] time of the controller. The NoSweat duty cycles the anti-sweat heaters on a seven second interval schedule. The percentage of time of the seven second interval for which the ASH heaters are on reflects the analog input from the ERC-1000. For example, if the analog input is at 5V, the ASH heaters are on for 50% of the duty cycle, or 3.5 seconds.

ERC-1000 Control

The ERC-1000 can monitor two dew point sensors and control two corresponding anti-sweat heater systems. Anti-sweat control can be based either on a shared dew point sensor (one assigned elsewhere in the controller) or on an individual dew point sensor assigned to each anti-sweat heater system.

The ERC-1000 controls NoSweat units with analog outputs (0-10 volt signal) based on the temperature span on the high and low dew point setpoints and the difference between the actual dew point and the dew point setpoints. ASH heater output ranges in analog value from 0-100%. The heaters are at 100% capacity when the space dew point meets or exceeds the high setpoint; conversely, they are at 0 capacity when the space dew point meets or goes below the low setpoint. Analog anti-sweat control can be put into a software override mode by offsetting the assigned dew point sensor to read above the high setpoint. When an anti-sweat control output is returned to normal system control from an override condition, it assumes the state called for by the control algorithm.

Anti-Sweat Heaters Status Screen

The anti-sweat heaters status screen displays the current analog status of the anti-sweat heater system. For example, if the status of the system is at 50%, the heaters are operating at a 50% capacity. The status screen also displays the current dew point reading, as detected by the space dew point sensor, in addition to the preprogrammed dew point setpoints.

```
01-ASH FROZEN FOOD SIDE
Status=88%      DP=53f
Hi SP=60f       Lo SP=20f
```

No Required Access Level

Anti-Sweat Heaters Setpoint Screen

The anti-sweat heaters setpoint screen provides access to all programmable parameters affecting the control of anti-sweat heaters by the ERC-1000. The title line of this screen consists of the ASH number and user-defined ASH name.

The first data field [Analog Output] enables the assignment to an anti-sweat control output. This programmable data field requires Level 2 access.

The next data field, [DP sensor], which also requires Level 2 access, enables the assignment of any dew point sensor as an input to the control logic for the ASH.

The remaining two data fields, [Hi SP=], and [Lo SP=], are the programmable control parameters that govern the duty cycling of the ASH.

```
01-ASH FROZEN FOOD CASES
Analog Output 1-1     DP Sensor 1-3
Hi SP=60              Lo SP=20
```

Required Access Level: 2

Anti-Sweat Heaters Names Screen

Descriptive names for each of the ASH outputs configured for control by the ERC-1000 may be assigned. A maximum of 24 alphanumeric characters is allowed.

```
Anti-Sweat Names
01 FROZEN FOOD CASES
02 ICE CREAM CASES
```

Required Access Level: 1

Anti-Sweat Heaters Sensor Names Screen

Descriptive names for each of the dew point sensors configured by the ERC-1000 may be assigned. A maximum of 24 alphanumeric characters is allowed.

```
Sensor Names
01 1-7   ASH-1 FROZ FOOD CASES
02 1-8   ASH-2 ICE CREAM DOORS LEFT
```

Required Access Level: 2

Anti-Sweat Heaters Configuration Screen

The anti-sweat heaters configuration screen enables you to specify the number of anti-sweat outputs that the ERC-1000 controls.

NOTE

As long as the value of this data field equals [00], you cannot view the other screens listed on the anti-sweat heaters menu.

The ASH output type must be set to [ANALOG]. Analog anti-sweat control uses a 0-10VDC analog output, setpoints, and dew point for control.

```
Anti-Sweats
Number of Anti-Sweats (Max: 2) : 2
ASH output type              Analog
```

Required Access Level: 2

NOTE

When the [Number of ASHs] field value is [00], the following screen displays for all ASH menu selections EXCEPT the configuration screen.

```
No Anti-Sweats configured
```

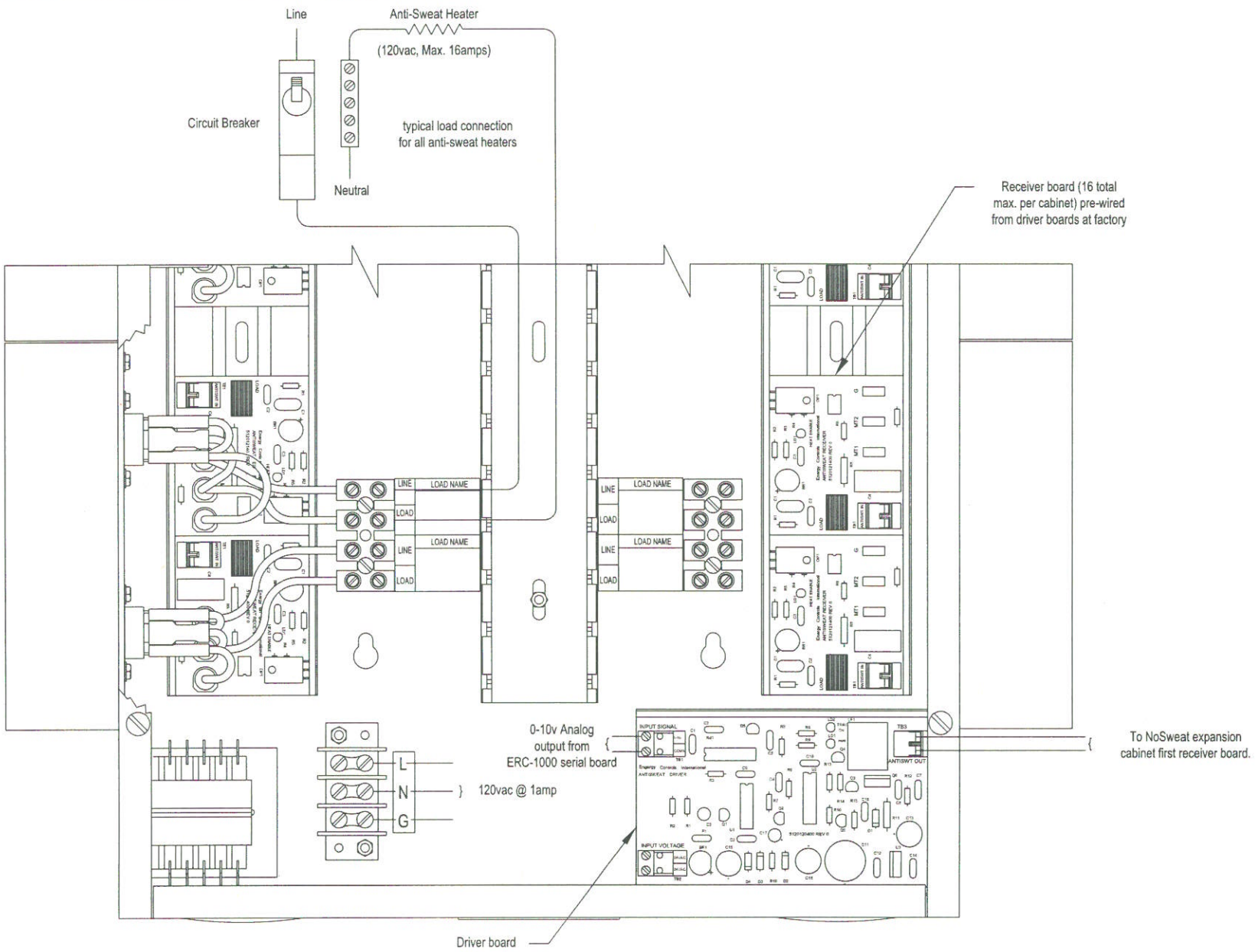

NoSweat HOOKUP DIAGRAM

FIGURE 1

Danfoss Inc.
Air-Conditioning & Refrigeration Division
7941 Corporate Drive
Baltimore, MD 21236-4925
Telephone (410) 931-8250
Fax (410) 931-8256
Internet www.danfoss.com

Subject to change without notice • Printed in the U.S.A.