additional informations:

filter colour : impregnated

filter weight : 107kg

label:

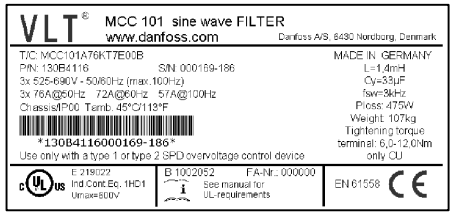

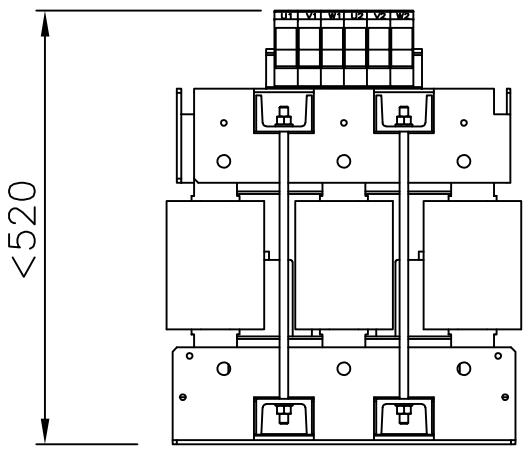

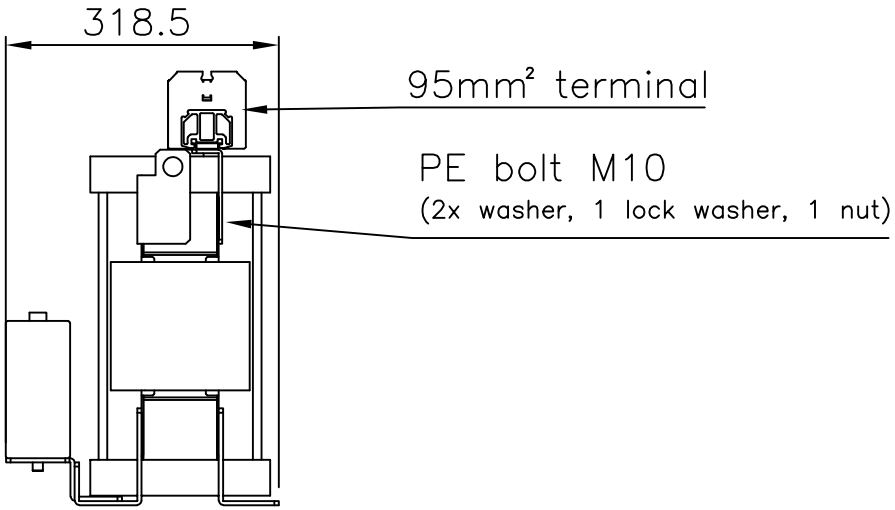

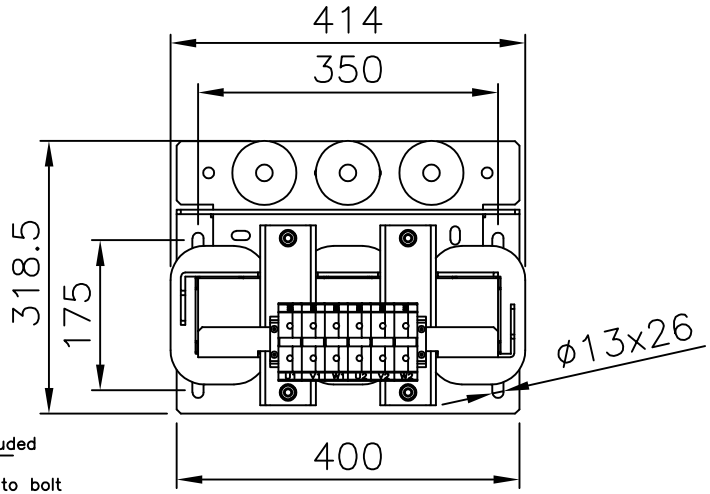

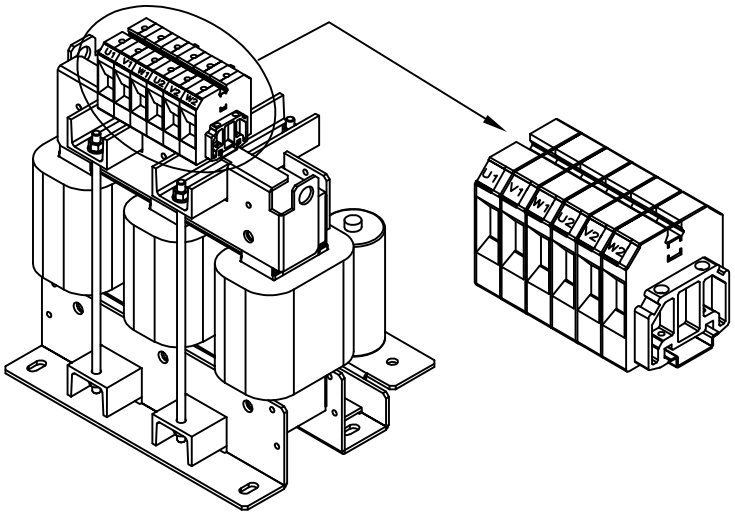

	date	name	amendment
e	04.05.16	Schr./Fle.	typelabel updated Danfoss Postaddress included
d	22.12.14	Schr./Fle.	typelabel updated cap. connectors changed to bolt
c	11.03.13	Schr./ KOR	typelabel updated
b	15.07.11	KOR/Lauer	new mechanical design
a	01.10.10	KOR/Lauer	approval added

Dimensions toleranced according to ISO 2768-m						
Tolerance class	0.5 to 3	from 3 to 6	from 6 to 30	from 30 to 120	from 120 to 400	from 400 to 1000
m (middle)	±0.1	±0.1	±0.2	±0.3	±0.5	±0.8

	date	name	signature	scale
drawn	03.06.10	Kornau	Kornau	/
checked	03.06.10	Bremer	Bremer	formate A4

DIN ISO 5456

all dimensions mm

Dimensions B 1002052
sine-wave filter 690V 76A – IP00

order number	drawing number	modi.	sheet
130B4116	Z791004012	e	1/1

Please observe protection clause to ISO 16016