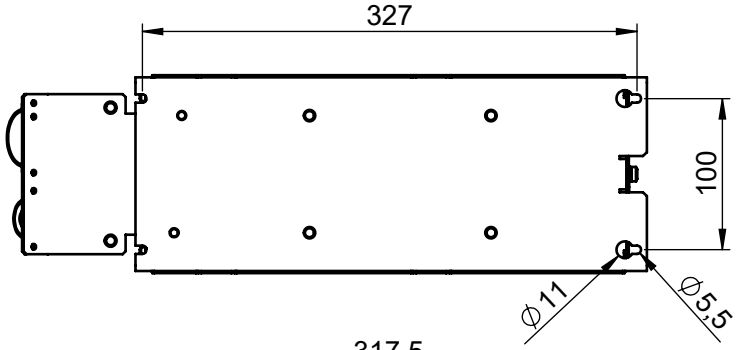

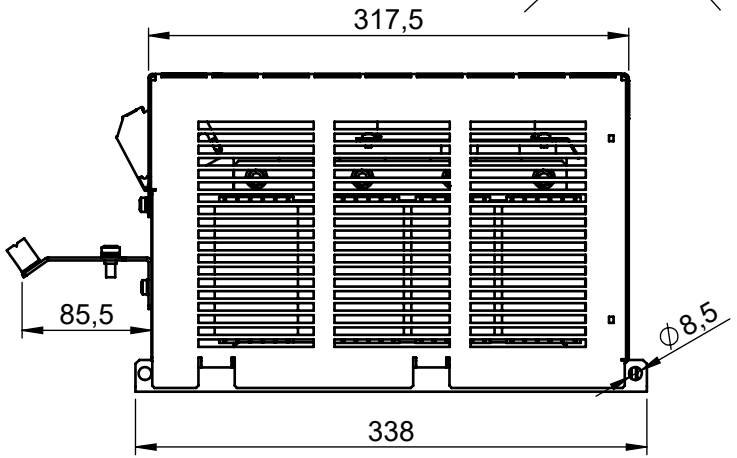

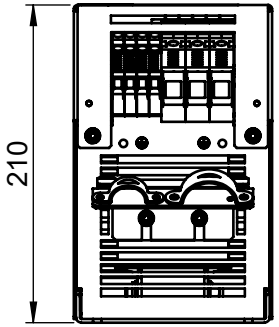

input terminals
U1, V1, W1, R+: 10mm²
Tightening torque: 1.2-2.0Nm

output terminals
U2, V2, W2: 35mm²
Tightening torque: 2.5-5.0Nm

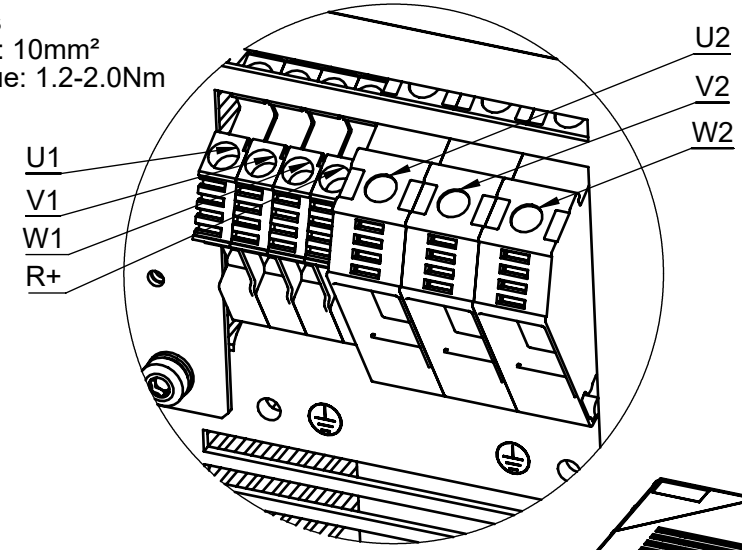

A (1 : 1.5)

PE M6
Tightening torque: 6Nm

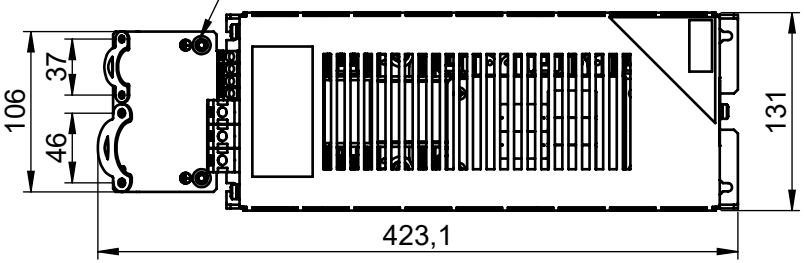

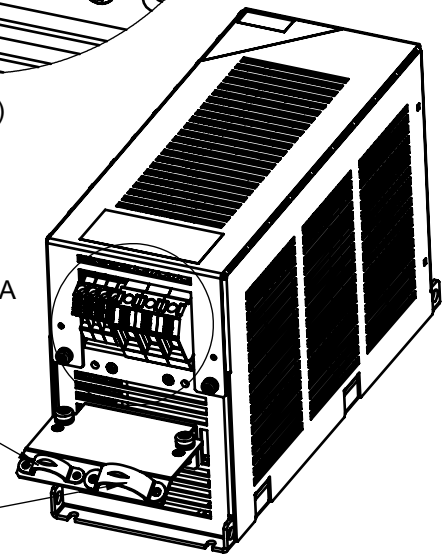

Cable clamp R=25,6
DANFOSS Part-No. 195N3206

Cable clamp R=35
DANFOSS Part-No. 130B4045

included accessories
1x decoupling plate
2x cable clamps R=25,6
1x cable clamp R=35
4x screws M4x25
2x combi-screws M6x16
2x screws M5x8

Surface: filter color RAL 7001				Weight: 15.9 kg	MCC201A12KT3E20B
B	06.10.2020	Besbes	306592	Scale 1:5	All Mode Sine-Wave Filter 13A 400V IP20
A	06.10.2020	Besbes	306259		
Rev	Date	Name	Modification		
Cons.	06.10.2020	Besbes	General tolerance ISO 2768-mK		Order number: 175U6013 / Drawing Number-Revision-Version: 186899-B-0
Draw.	06.10.2020	Besbes			
Check.	06.10.2020	Eilers	ISO 5456		Observe protection clause to ISO 16016 / Sheetsize: A4 / Sheet: 1/1