MAKING MODERN LIVING POSSIBLE

Operating Instructions

VLT® AutomationDrive FC 302

12-pulse

vlt-drives.danfoss.com

THE REAL DRIVE

ENGINEERING
TOMORROW

Danfoss A/S
6430 Nordborg
Denmark
CVR nr.: 20 16 57 15

Telephone: +45 7488 2222
Fax: +45 7449 0949

EU DECLARATION OF CONFORMITY

Danfoss A/S

Danfoss Drives A/S

declares under our sole responsibility that the

Product category: Frequency Converter

Type designation(s): FC-302XYYYZZ**********

Character X: N or P
Character YYY: K25, K37, K55, K75, 1K1, 1K5, 2K2, 3K0, 3K7, 4K0, 5K5, 7K5, 11K, 15K, 18K, 22K, 30K, 37K, 45K, 55K, 75K, 90K, 110, 132, 150, 160, 200, 250, 315, 355, 400, 450, 500, 560, 630, 710, 800, 900, 1M0, 1M2
Character ZZ: T2, T5, T6, T7
* may be any number or letter indicating drive options which do not impact this DoC.
The meaning of the 39 characters in the type code string can be found in appendix 00729776.

Covered by this declaration is in conformity with the following directive(s), standard(s) or other normative document(s), provided that the product is used in accordance with our instructions.

Low Voltage Directive 2014/35/EU

EN61800-5-1:2007 + A1:2017	Adjustable speed electrical power drive systems – Part 5-1: Safety requirements – Electrical, thermal and energy.

EMC Directive 2014/30/EU

EN61800-3:2004 + A1:2012	Adjustable speed electrical power drive systems – Part 3: EMC requirements and specific test methods.

RoHS Directive 2011/65/EU including amendment 2015/863.

EN63000:2018	Technical documentation for the assessment of electrical and electronic products with respect to the restriction of

Date: 2020.09.15 Place of issue:	Issued by	Date: 2020.09.15 Place of issue:	Approved by
Graasten, DK	**Signature:** **Name: Gert Kjær** **Title: Senior Director, GDE**	Graasten, DK	**Signature:** **Name: Michael Termansen** **Title: VP, PD Center Denmark**

Danfoss only vouches for the correctness of the English version of this declaration. In the event of the declaration being translated into any other language, the translator concerned shall be liable for the correctness of the translation

hazardous substances

For products including available Safe Torque Off (STO) function according to unit typecode on the nameplate: **X, B or R at character 18 of the typecode.**

Machine Directive 2006/42/EC

EN/IEC 61800-5-2:2007 (Safe Stop function conforms with STO – Safe Torque Off, SIL 2 Capability)	Adjustable speed electrical power drive systems – Part 5-2: Safety requirements – Functional

Other standards considered:

EN ISO 13849-1:2015 (Safe Stop function, PL d (MTTFd=14000 years, DC=90%, Category 3)	Safety of machinery - Safety-related parts of control systems - Part 1: General principles for design
EN/IEC 61508-1:2011, EN/IEC 61508-2:2011 (Safe Stop function, SIL 2 (PFH = 1E-10/h, 1E-8/h for specific variants, PFD = 1E-10, 1E-4 for specific variants, SFF>99%, HFT=0))	Functional safety of electrical/electronic/ programmable electronic safety-related systems Part 1: General requirements Part 2: Requirements for electrical/ electronic / programmable electronic safety-related systems
EN/IEC 62061:2005 + A1:2013 (Safe Stop function, SILCL 2)	Safety of machinery - Functional safety of safety-related electrical, electronic and programmable electronic control systems
EN/IEC 60204-1:2006 + A1:2009 (Stop Category 0)	Safety of machinery - Electrical equipment of machines - Part 1: General requirements

For products including ATEX option, it requires STO function in the products. The products can have the VLT PTC Thermistor Card MCB112 installed from factory **(2 at character 32 in the typecode)**, or it can be separately installed as an additional part.

2014/34/EU - Equipment for explosive atmospheres (ATEX)

Based on EU harmonized standard:

EN 50495: 2010	Safety devices required for safe functioning of equipment with respect to explosion risks.

Notified Body:
PTB Physikalisch-Technische Bundesanstalt, Bundesallee 100, 38116 Braunschweig,
has assessed the conformity of the "ATEX certified motor thermal protection systems" of Danfoss FC VLT Drives with Safe Torque Off function and has issued the certificate PTB 14 ATEX 3009.

Contents

1

1 Introduction

1.1 Purpose of the Manual

The frequency converter is designed to provide high shaft performance on electrical motors. Read these operating instructions carefully for proper use. Incorrect handling of the frequency converter may cause improper operation of the frequency converter or related equipment, shorten lifetime, or cause other troubles.

These operating instructions provide information on:

- Start-up.
- Installation.
- Programming.
- Troubleshooting.
- *Chapter 1 Introduction* introduces the manual and informs about approvals, symbols, and abbreviations used in this manual.
- *Chapter 2 Safety Instructions* entails instructions on how to handle the frequency converter in a safe way.
- *Chapter 3 How to Install* guides through the mechanical and electrical installations.
- *Chapter 4 How to Programme* explains how to operate and programme the frequency converter via the LCP.
- *Chapter 5 General Specifications* contains technical data about the frequency converter.
- *Chapter 6 Warnings and Alarms* assists in solving problems that may occur when using the frequency converter.

VLT® is a registered trademark.
DeviceNet™ is a trademark of ODVA, Inc.

1.2 Additional Resources

- The *VLT® AutomationDrive FC 301/FC 302 Design Guide* details all technical information about the frequency converter and customer design and applications.
- The *VLT® AutomationDrive FC 301/FC 302 Programming Guide* provides information on how to programme and includes complete parameter descriptions.
- The *VLT® PROFIBUS DP MCA 101 Installation Guide* provides information about installing and troubleshooting of the PROFIBUS fieldbus option.
- The *VLT® PROFIBUS DP MCA 101 Programming Guide* provides the information required for controlling, monitoring, and programming the frequency converter via a PROFIBUS fieldbus.
- The *VLT® DeviceNet MCA 104 Installation Guide* provides information about installing and troubleshooting of the DeviceNet® fieldbus option.
- The *VLT® DeviceNet MCA 104 Programming Guide* provides the information required for controlling, monitoring, and programming the frequency converter via a DeviceNet® fieldbus.

Danfoss technical documentation is also available online at *http://drives.danfoss.com/knowledge-center/technical-documentation/*.

1.3 Document and Software Version

This manual is regularly reviewed and updated. All suggestions for improvement are welcome. *Table 1.1* shows the document version and the corresponding software version.

Edition	Remarks	Software version
MG34Q4xx	F14 and F15 enclosure sizes added. Software version update.	7.4x

Table 1.1 Document and Software Version

1.4 Approvals and Certifications

1.4.1 Approvals

The frequency converter complies with UL 508C thermal memory retention requirements. For more information, refer to the section *Motor Thermal Protection* in the product-specific *design guide*.

NOTICE

Imposed limitations on the output frequency (due to export control regulations):

From software version 6.72 onwards, the output frequency of the frequency converter is limited to 590 Hz. Software versions 6.xx also limit the maximum output frequency to 590 Hz, but these versions cannot be flashed, that is, neither downgraded nor upgraded.

The 1400–2000 kW (1875–2680 hp) 690 V frequency converters are approved for CE only.

1.5 Disposal

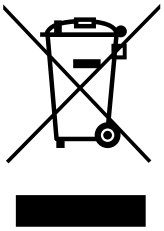

Do not dispose of equipment containing electrical components together with domestic waste.
Collect it separately in accordance with local and currently valid legislation.

1.6 Abbreviations and Conventions

60° AVM	60° asynchronous vector modulation
A	Ampere/AMP
AC	Alternating current
AD	Air discharge
AEO	Automatic energy optimization
AI	Analog input
AIC	Ampere interrupting current
AMA	Automatic motor adaptation
AWG	American wire gauge
°C	Degrees celsius
CB	Circuit breaker
CD	Constant discharge
CDM	Complete drive module: The frequency converter, feeding section, and auxiliaries
CE	European Conformity (European safety standards)
CM	Common mode
CT	Constant torque
DC	Direct current
DI	Digital input
DM	Differential mode
D-TYPE	Drive dependent
EMC	Electromagnetic compatibility
EMF	Electromotive force
ETR	Electronic thermal relay
f_{JOG}	Motor frequency when jog function is activated
f_M	Motor frequency
f_{MAX}	Maximum output frequency, the frequency converter applies on its output
f_{MIN}	Minimum motor frequency from the frequency converter
$f_{M,N}$	Nominal motor frequency
FC	Frequency converter
Hiperface®	Hiperface® is a registered trademark by Stegmann
HO	High overload
hp	Horse power
HTL	HTL encoder (10–30 V) pulses - High-voltage transistor logic
Hz	Hertz
I_{INV}	Rated inverter output current
I_{LIM}	Current limit
$I_{M,N}$	Nominal motor current
$I_{VLT,MAX}$	Maximum output current
$I_{VLT,N}$	Rated output current supplied by the frequency converter
kHz	Kilohertz
LCP	Local control panel
lsb	Least significant bit
m	Meter
mA	Milliampere
MCM	Mille circular mil
MCT	Motion control tool
mH	Inductance in milli Henry
mm	Millimeter
ms	Millisecond
msb	Most significant bit
η_{VLT}	Efficiency of the frequency converter defined as ratio between power output and power input
nF	Capacitance in nano Farad
NLCP	Numerical local control panel
Nm	Newton meter
NO	Normal overload
n_s	Synchronous motor speed
Online/ Offline Parameters	Changes to online parameters are activated immediately after the data value is changed
$P_{br,cont.}$	Rated power of the brake resistor (average power during continuous braking)
PCB	Printed circuit board
PCD	Process data
PDS	Power drive system: a CDM and a motor
PELV	Protective extra low voltage
P_m	Frequency converter nominal output power as high overload (HO)
$P_{M,N}$	Nominal motor power
PM motor	Permanent magnet motor
Process PID	PID (proportional integrated differential) regulator that maintains the speed, pressure, temperature, and so on
$R_{br,nom}$	Nominal resistor value that ensures a brake power on the motor shaft of 150/160% for 1 minute
RCD	Residual current device
Regen	Regenerative terminals
R_{min}	Minimum permissible brake resistor value by frequency converter
RMS	Root mean square
RPM	Revolutions per minute
R_{rec}	Recommended brake resistor resistance of Danfoss brake resistors
s	Second
SCCR	Short circuit current rating
SFAVM	Stator flux-oriented asynchronous vector modulation
STW	Status word
SMPS	Switch mode power supply

THD	Total harmonic distortion
T_{LIM}	Torque limit
TTL	TTL encoder (5 V) pulses - transistor transistor logic
$U_{M,N}$	Nominal motor voltage
UL	Underwriters Laboratories (US organization for the safety certification)
V	Volts
VT	Variable torque
VVC^+	Voltage vector control plus

Table 1.2 Abbreviations

Conventions

Numbered lists indicate procedures.
Bullet lists indicate other information and description of illustrations.
Italicized text indicates:

- Cross-reference.
- Link.
- Footnote.
- Parameter name, parameter group name, parameter option.

All dimensions in drawings are in mm (in).
* Indicates a default setting of a parameter.

2 Safety Instructions

2.1 Safety Symbols

The following symbols are used in this guide:

⚠WARNING

Indicates a potentially hazardous situation that could result in death or serious injury.

⚠CAUTION

Indicates a potentially hazardous situation that could result in minor or moderate injury. It can also be used to alert against unsafe practices.

NOTICE

Indicates important information, including situations that can result in damage to equipment or property.

2.2 Qualified Personnel

Correct and reliable transport, storage, installation, operation, and maintenance are required for the trouble-free and safe operation of the frequency converter. Only qualified personnel are allowed to install and operate this equipment.

Qualified personnel are defined as trained staff, who are authorized to install, commission, and maintain equipment, systems, and circuits in accordance with pertinent laws and regulations. Also, the qualified personnel must be familiar with the instructions and safety measures described in this manual.

2.3 Safety Regulations

⚠WARNING

HIGH VOLTAGE

Frequency converters contain high voltage when connected to AC mains input, DC supply, or load sharing. Failure to perform installation, start-up, and maintenance by qualified personnel can result in death or serious injury.

- **Only qualified personnel must perform installation, start-up, and maintenance.**

⚠WARNING

UNINTENDED START

When the frequency converter is connected to AC mains, DC supply, or load sharing, the motor may start at any time. Unintended start during programming, service, or repair work can result in death, serious injury, or property damage. The motor can start with an external switch, a fieldbus command, an input reference signal from the LCP or LOP, via remote operation using MCT 10 Set-up Software, or after a cleared fault condition.

To prevent unintended motor start:

- **Press [Off/Reset] on the LCP before programming parameters.**
- **Disconnect the frequency converter from the mains.**
- **Completely wire and assemble the frequency converter, motor, and any driven equipment before connecting the frequency converter to AC mains, DC supply, or load sharing.**

⚠WARNING

DISCHARGE TIME

The frequency converter contains DC-link capacitors, which can remain charged even when the frequency converter is not powered. High voltage can be present even when the warning LED indicator lights are off. Failure to wait the specified time after power has been removed before performing service or repair work can result in death or serious injury.

- **Stop the motor.**
- **Disconnect AC mains and remote DC-link power supplies, including battery back-ups, UPS, and DC-link connections to other frequency converters.**
- **Disconnect or lock PM motor.**
- **Wait for the capacitors to discharge fully. The minimum duration of waiting time is specified in *Table 2.1*.**
- **Before performing any service or repair work, use an appropriate voltage measuring device to make sure that the capacitors are fully discharged.**

Voltage [V]	Power range [kW (hp)]	Minimum waiting time (minutes)
380–500	250–1000 (350–1350)	30
525–690	355–2000 (475–2700)	40

Table 2.1 Discharge Time

⚠WARNING

LEAKAGE CURRENT HAZARD

Leakage currents exceed 3.5 mA. Failure to ground the frequency converter properly can result in death or serious injury.

- **Ensure the correct grounding of the equipment by a certified electrical installer.**

⚠WARNING

EQUIPMENT HAZARD

Contact with rotating shafts and electrical equipment can result in death or serious injury.

- **Ensure that only trained and qualified personnel perform installation, start-up, and maintenance.**
- **Ensure that electrical work conforms to national and local electrical codes.**
- **Follow the procedures in this guide.**

⚠WARNING

UNINTENDED MOTOR ROTATION WINDMILLING

Unintended rotation of permanent magnet motors creates voltage and can charge the unit, resulting in death, serious injury, or equipment damage.

- **Ensure that permanent magnet motors are blocked to prevent unintended rotation.**

⚠CAUTION

INTERNAL FAILURE HAZARD

An internal failure in the frequency converter can result in serious injury when the frequency converter is not properly closed.

- **Ensure that all safety covers are in place and securely fastened before applying power.**

To run STO, more wiring for the frequency converter is required. Refer to *VLT® Frequency Converters Safe Torque Off Operating Instructions* for further information.

3 How to Install

3.1 Pre-installation

3.1.1 Planning the Installation Site

NOTICE

Plan the installation of the frequency converter before commencing. Not planning the installation thoroughly can result in extra work during and after installation.

Select the best possible operation site by considering the following (see details on the following pages, and the respective design guides):

- Ambient operating temperature.
- Installation method.
- How to cool the unit.
- Position of the frequency converter.
- Cable routing.
- Ensure that the power source supplies the correct voltage and necessary current.
- Ensure that the motor current rating is within the maximum current from the frequency converter.
- If the frequency converter is without built-in fuses, ensure that the external fuses are rated correctly.

3.1.1.1 Inspection on Receipt

After receiving the delivery, immediately check whether the items supplied match the shipping documents. Danfoss does not honor claims for faults registered later.

Register a complaint immediately:

- With the carrier if there is visible transport damage.
- With the responsible Danfoss representative if there are visible defects or incomplete delivery.

3.1.2 Transportation and Unpacking

Locate the frequency converter as close as possible to the final installation site before unpacking.
Remove the box and handle the frequency converter on the pallet, as long as possible.

3.1.3 Lifting Unit

Always lift the frequency converter via the dedicated lifting eyes.

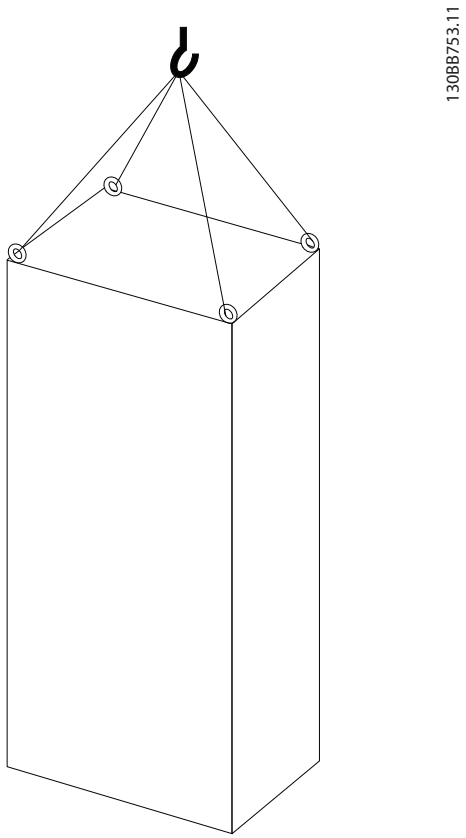

Illustration 3.1 Recommended Lifting Method, Enclosure Size F8.

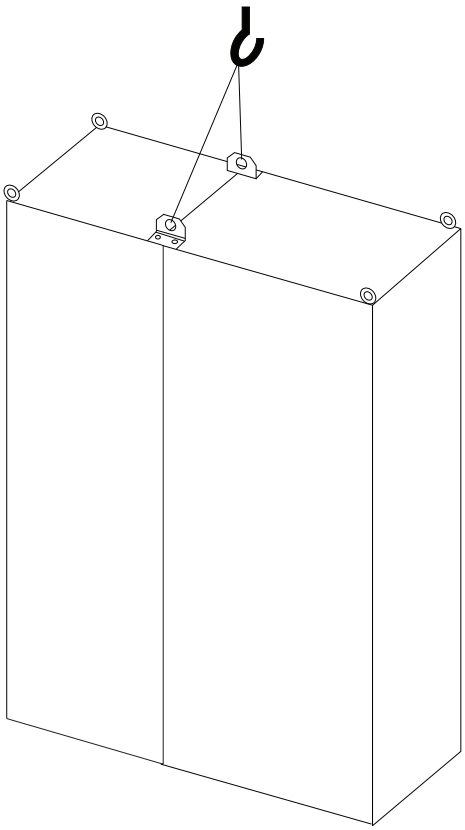

Illustration 3.2 Recommended Lifting Method, Enclosure Size F9/F10.

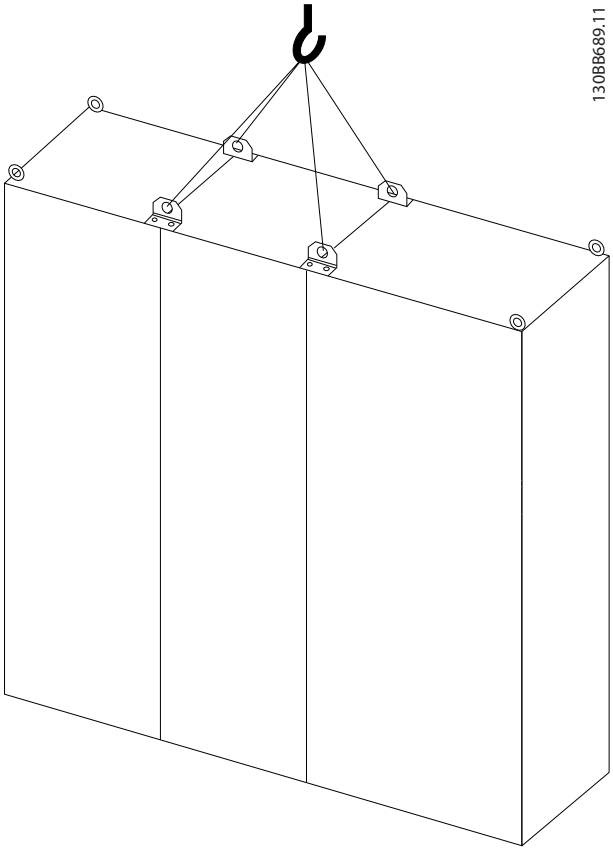

Illustration 3.3 Recommended Lifting Method, Enclosure Size F11/F12/F13/F14.

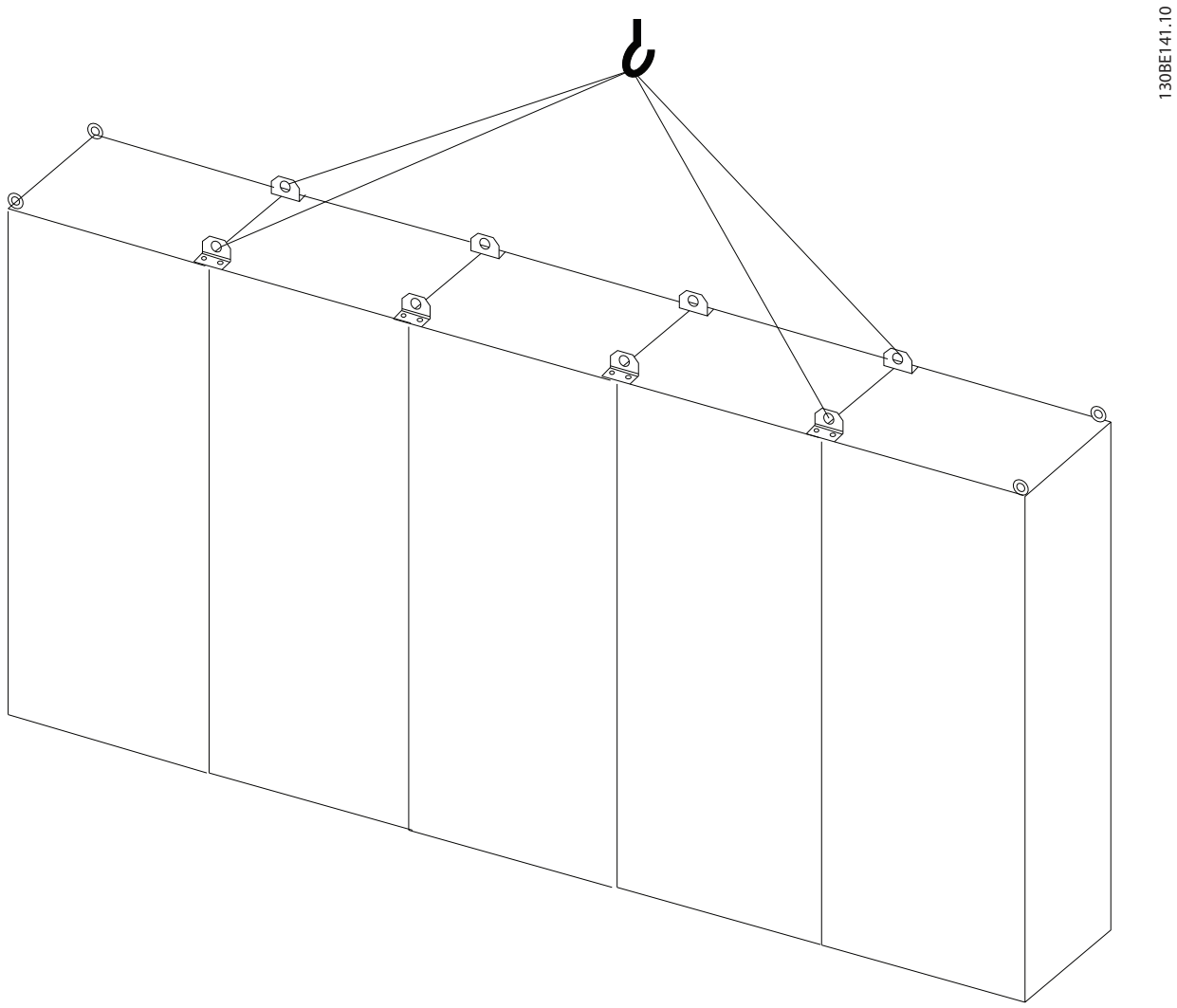

Illustration 3.4 Recommended lifting method, Enclosure Size F15

NOTICE

The plinth is provided in the same packaging as the frequency converter, but is not attached during shipment. The plinth is required to allow airflow cooling to the frequency converter. Position the frequency converter on top of the plinth in the final installation location. The angle from the top of the frequency converter to the lifting cable must be >60°.

In addition to *Illustration 3.1* to *Illustration 3.3*, a spreader bar can be used to lift the frequency converter.

3

3.1.4 Mechanical Dimensions

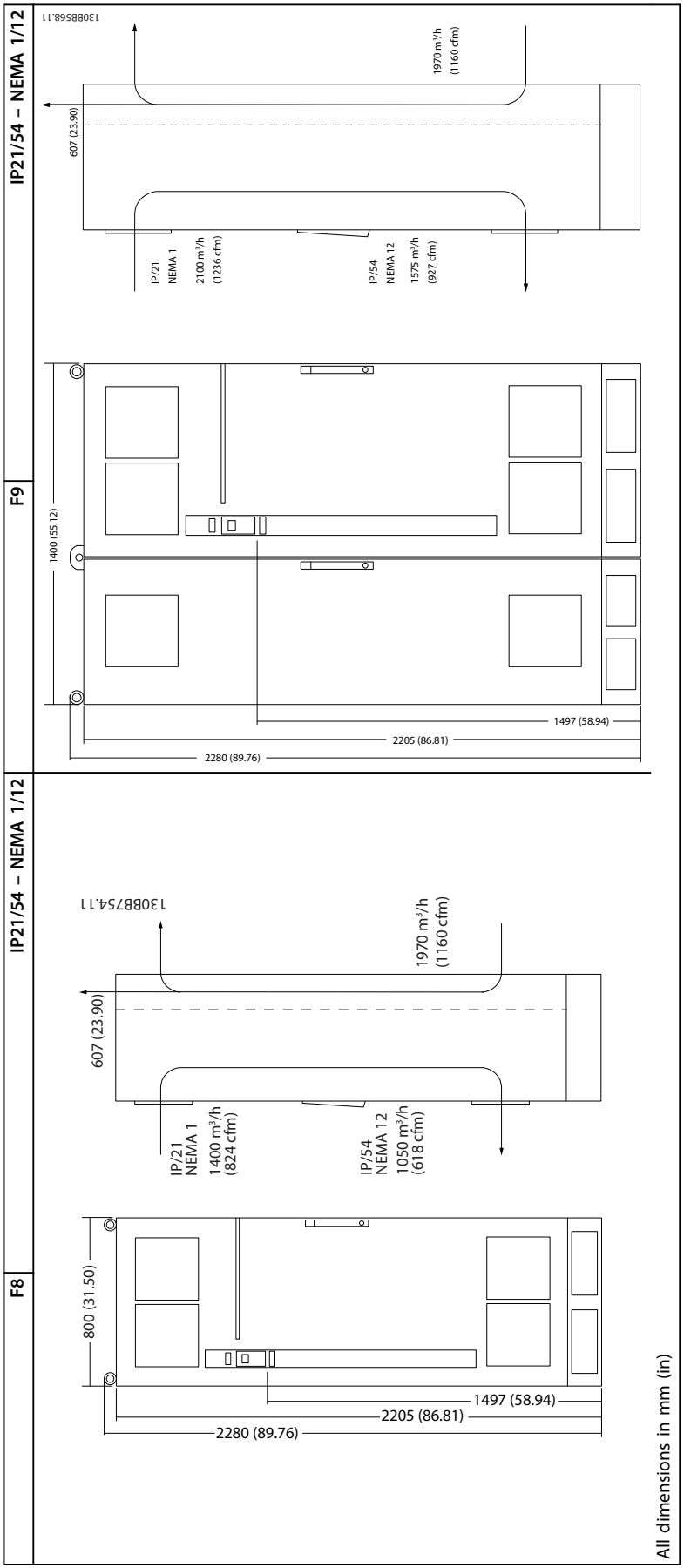

Table 3.1 Mechanical Dimensions, Enclosure Sizes F8 and F9

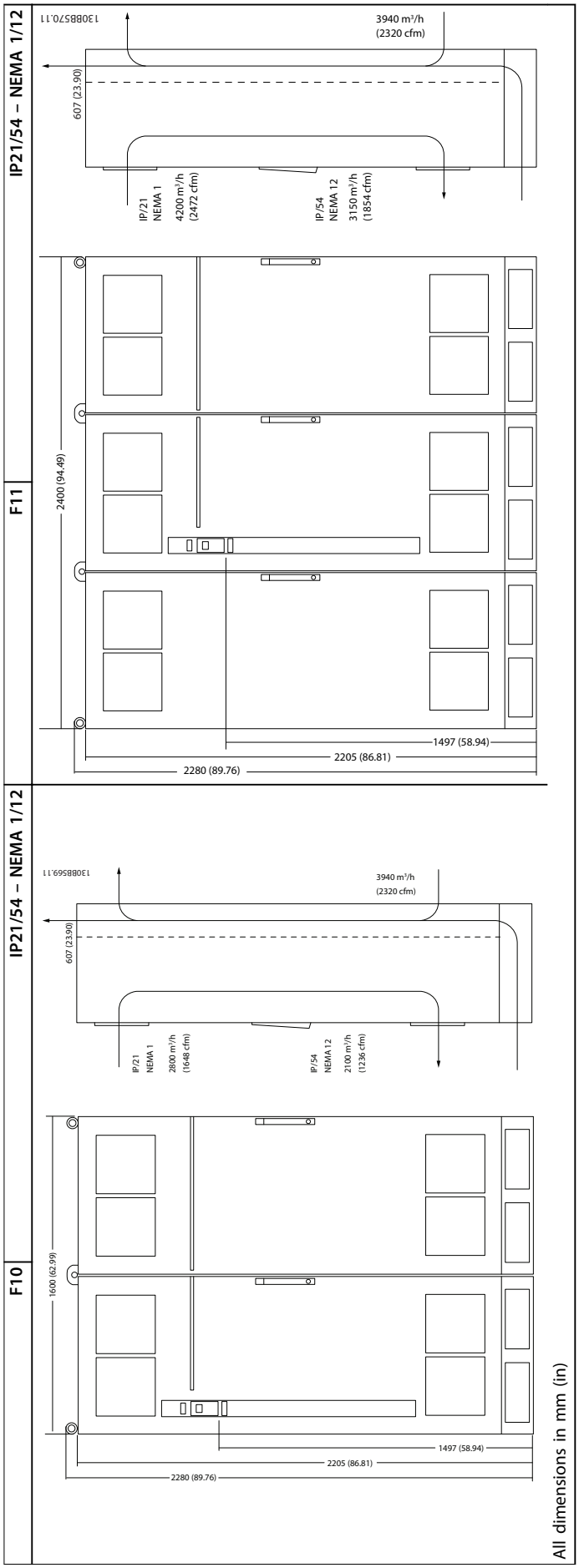

Table 3.2 Mechanical Dimensions, Enclosure Sizes F10 and F 11

3

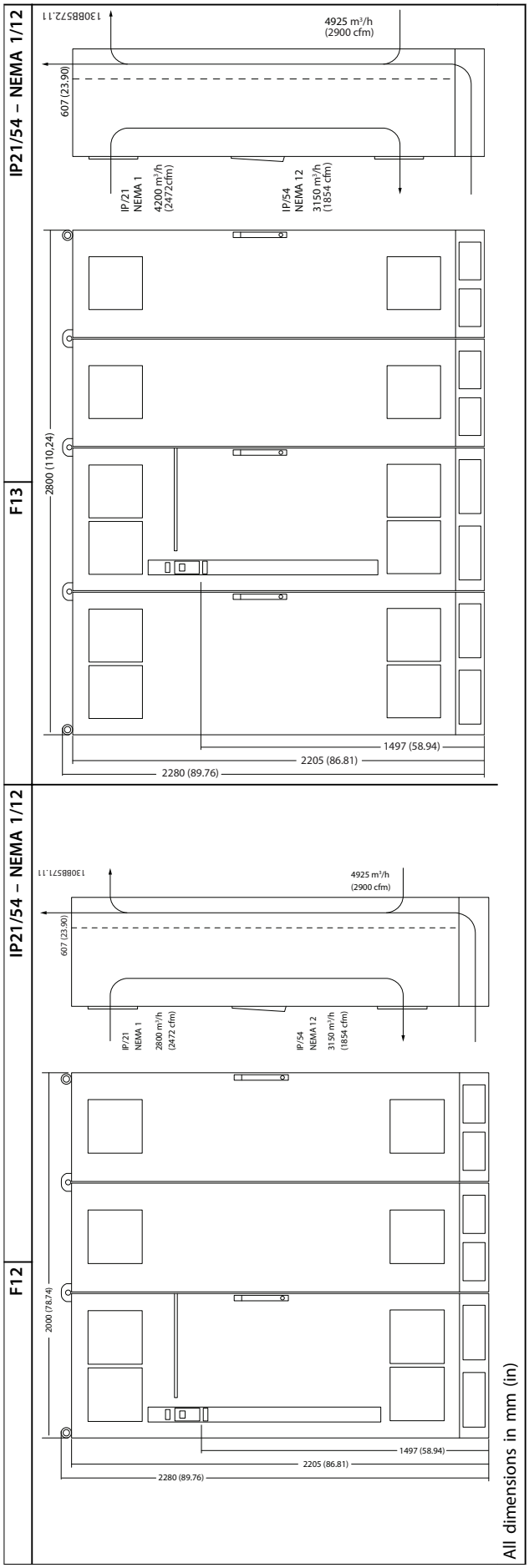

Table 3.3 Mechanical Dimensions, Enclosure Sizes F12 and F13

	IP21/54 – NEMA 1/12
F14	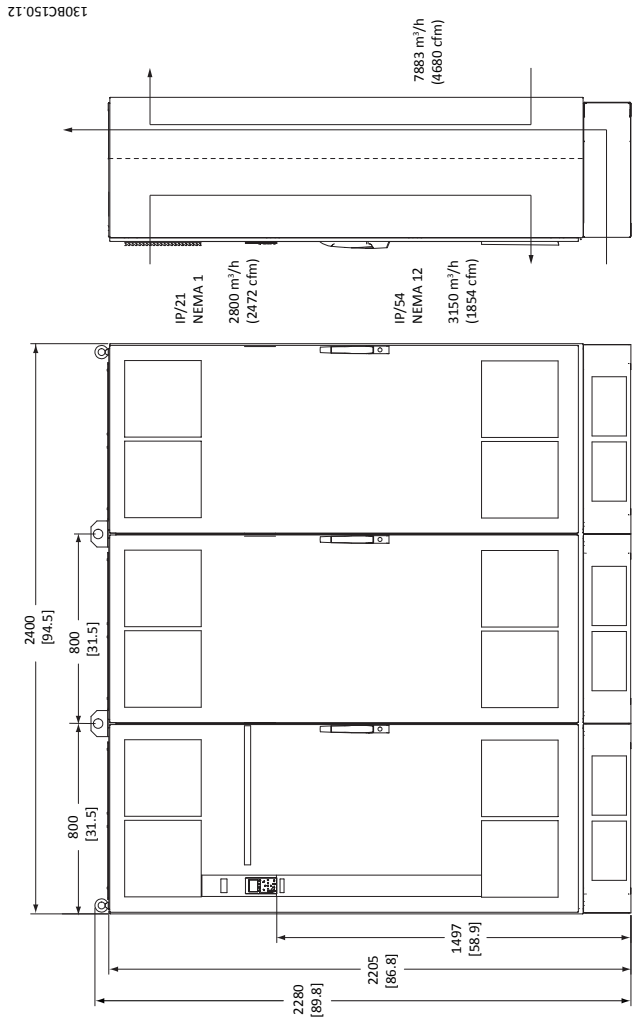

All dimensions in mm (in)

Table 3.4 Mechanical Dimensions, Enclosure Size F14

3

	IP21/54 – NEMA 1/12
F15	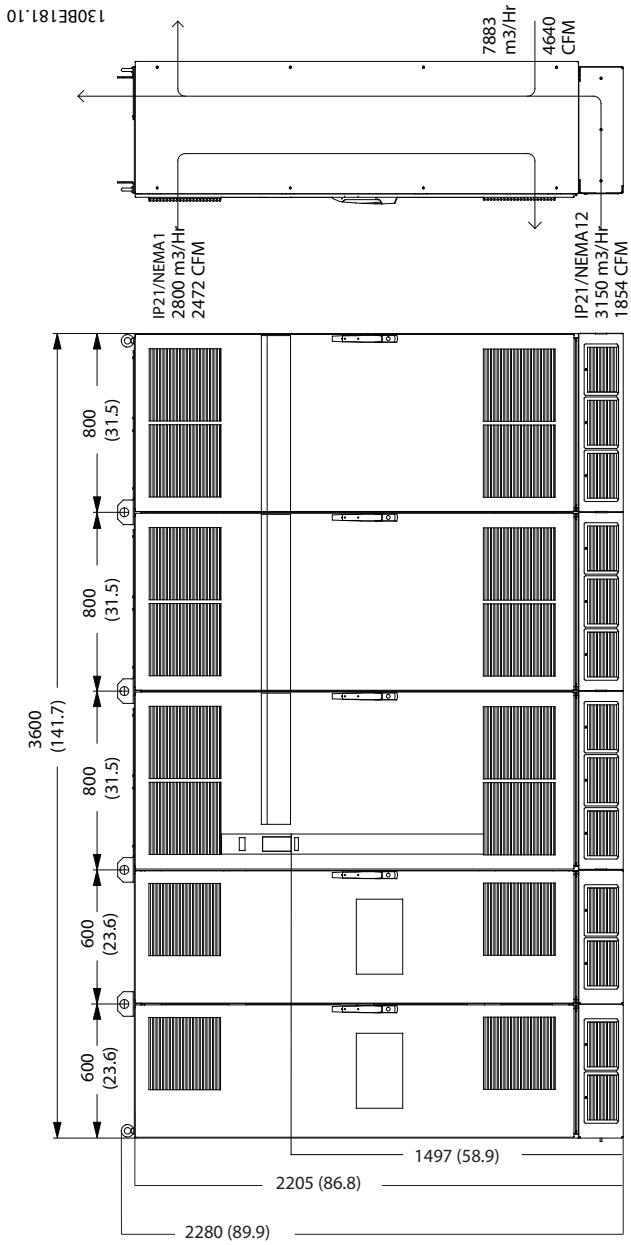

All dimensions in mm (in)

Table 3.5 Mechanical Dimensions, Enclosure Size F15

Enclosure size	F8	F9	F10	F11
	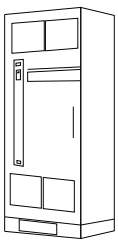 130BE142.10	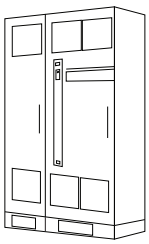 130BE144.10	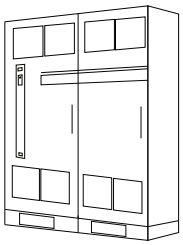 130BE145.10	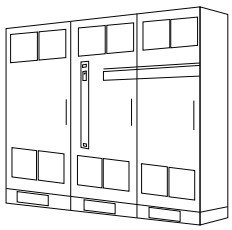 130BE146.10
High overload rated power – 150% overload torque	**250–400 kW (380–500 V)** **355–560 kW (525–690 V)**	**250–400 kW (380–500 V)** **355–56 kW (525–690 V)**	**450–630 kW (380–500 V)** **630–800 kW (525–690 V)**	**710–800 kW (380–500 V)** **900–1200 kW (525–690 V)**
IP **NEMA**	21, 54 12	21, 54 12	21, 54 12	21, 54 12
Shipping dimensions [mm (in)]				
Height	2324 (91.5)	2324 (91.5)	2324 (91.5)	2324 (91.5)
Width	970 (38.2)	1568 (61.7)	1760 (69.3)	2559 (100.7)
Depth	1130 (44.5)	1130 (44.5)	1130 (44.5)	1130 (44.5)
Frequency converter dimensions [mm (in)]				
Height	2204 (86.8)	2204 (86.8)	2204 (86.8)	2204 (86.8)
Width	800 (31.5)	1400 (55.1)	1600 (63.0)	2400 (94.5)
Depth	606 (23.9)	606 (23.9)	606 (23.9)	606 (23.9)
Max weight [kg (lb)]	440 (970)	656 (1446)	880 (1940)	1096 (2416)

Table 3.6 Mechanical Dimensions, Enclosure Sizes F8–F11

Enclosure size	F12	F13	F14	F15
	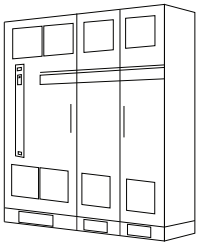 130BE147.10	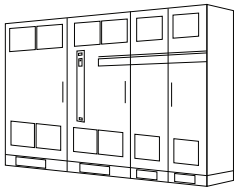 130BE148.10	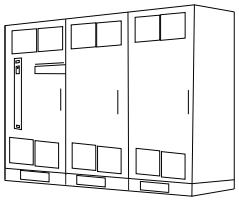 130BE149.11	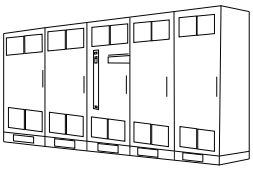 130BE150.10
High overload rated power – 150% overload torque	**450–630 kW (380–500 V)** **630–800 kW (525–690 V)**	**710–800 kW (380–500 V)** **900–1200 kW (525–690 V)**	**1400–1800 kW (525–690 V)**	**1400–1800 kW (525–690 V)**
IP **NEMA**	21, 54 12	21, 54 12	21, 54 12	21, 54 12
Shipping dimensions [mm (in)]				
Height	2324 (91.5)	2324 (91.5)	2324 (91.5)	2324 (91.5)
Width	2160 (85.0)	2960 (116.5)	2578 (101.5)	3778 (148.7)
Depth	1130 (44.5)	1130 (44.5)	1130 (44.5)	1130 (44.5)
Frequency converter dimensions [mm]				
Height	2204 (86.8)	2204 (86.8)	2204 (86.8)	2204 (86.8)
Width	2000 (78.7)	2800 (110.2)	2400 (94.5)	3600 (141.7)
Depth	606 (23.9)	606 (23.9)	606 (23.9)	606 (23.9)
Max weight [kg (lb)]	1022 (2253)	1238 (2729)	1410 (3108)	1626 (3585)

Table 3.7 Mechanical Dimensions, Enclosure Sizes F12–F15

3

3.2 Mechanical Installation

3.2.1 Preparation for Installation

To ensure reliable and effective installation of the frequency converter, make the following preparations:

- Provide a suitable mounting arrangement. The mounting arrangement depends on the design, weight, and torque of the frequency converter.
- To ensure that the space requirements are met, examine the mechanical drawings.
- Ensure that all wiring is done in accordance with national regulations.

3.2.2 Tools Required

- Drill with 10 mm or 12 mm bit.
- Tape measure.
- Wrench with relevant metric sockets (7–17 mm).
- Extensions to wrench.
- Sheet metal punch for conduits or cable glands in IP21/NEMA 1 and IP54 units
- Lifting bar to lift the unit (rod or tube maximum Ø 25 mm (1 in), able to lift minimum 400 kg (880 lb).
- Crane or other lifting aid to place the frequency converter in position.

3.2.3 General Considerations

Space

To allow airflow and cable access, ensure sufficient space above and below the frequency converter. In addition, allow for enough space in front of the unit to open the panel door, see *Illustration 3.5* to *Illustration 3.12*.

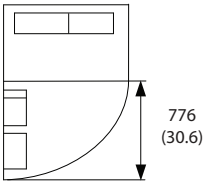

130BB531.10

Illustration 3.5 Space in Front of Enclosure Size F8

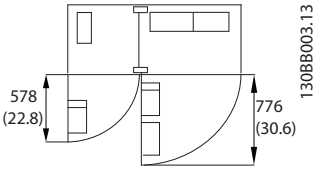

130BB003.13

Illustration 3.6 Space in Front of Enclosure Size F9

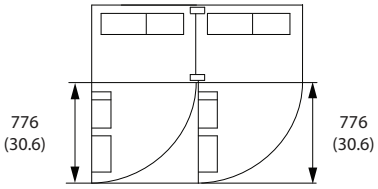

130BB574.10

Illustration 3.7 Space in Front of Enclosure Size F10

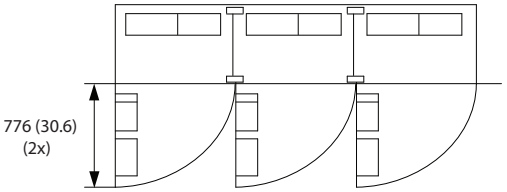

130BB575.10

Illustration 3.8 Space in Front of Enclosure Size F11

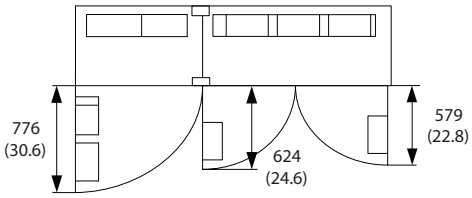

130BB576.10

Illustration 3.9 Space in Front of Enclosure Size F12

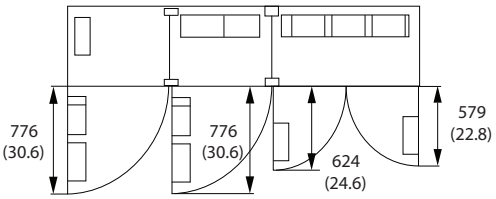

130BB577.10

Illustration 3.10 Space in Front of Enclosure Size F13

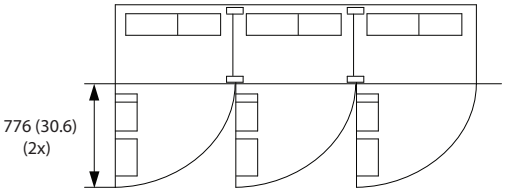

130BB575.10

Illustration 3.11 Space in Front of Enclosure Size F14

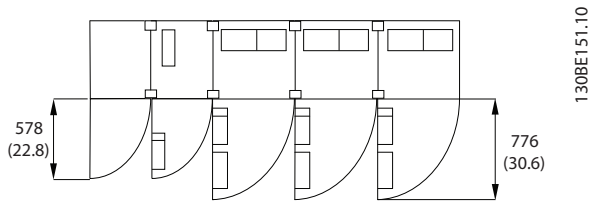

Illustration 3.12 Space in Front of Enclosure Size F15

Wire access

Ensure that proper wire access is present including the necessary bending allowance.

NOTICE

All cable lugs/shoes must mount within the width of the terminal bus bar.

NOTICE

Because the motor wiring carries high frequency current, it is important that mains cables, motor cables, and control wires are run separately. Use metallic conduit or separated shielded wire. Failure to isolate mains cables, motor cables, and control wiring could result in the mutual signal coupling which may cause nuisance trip cases.

3.2.4 Terminal Locations, F8–F15

The F enclosures are available in 8 different sizes. The F8 consists of the rectifier and inverter modules in 1 cabinet. The F10, F12, and F14 consist of a rectifier cabinet on the left and an inverter cabinet on the right. The F9, F11, F13, and F15 have the option cabinet added to the F8, F10, F12, and F14, respectively.

3

3.2.4.1 Inverter and Rectifier, Enclosure Sizes F8, and F9

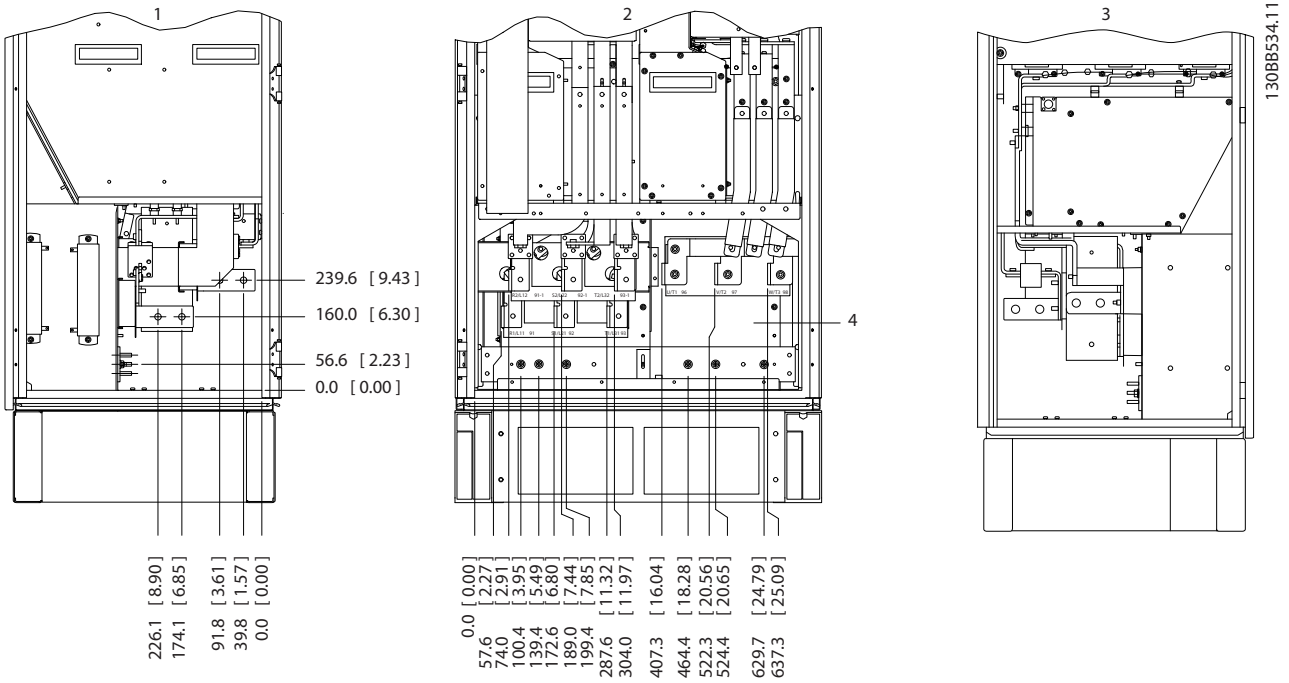

1	Left side view
2	Front view
3	Right side view
4	Ground bar

Illustration 3.13 Terminal Locations Inverter and Rectifier, Enclosure Sizes F8, and F9. The gland plate is 42 mm (1.65 in) below 0.0 level.

3.2.4.2 Inverter, Enclosure Sizes F10 and F11

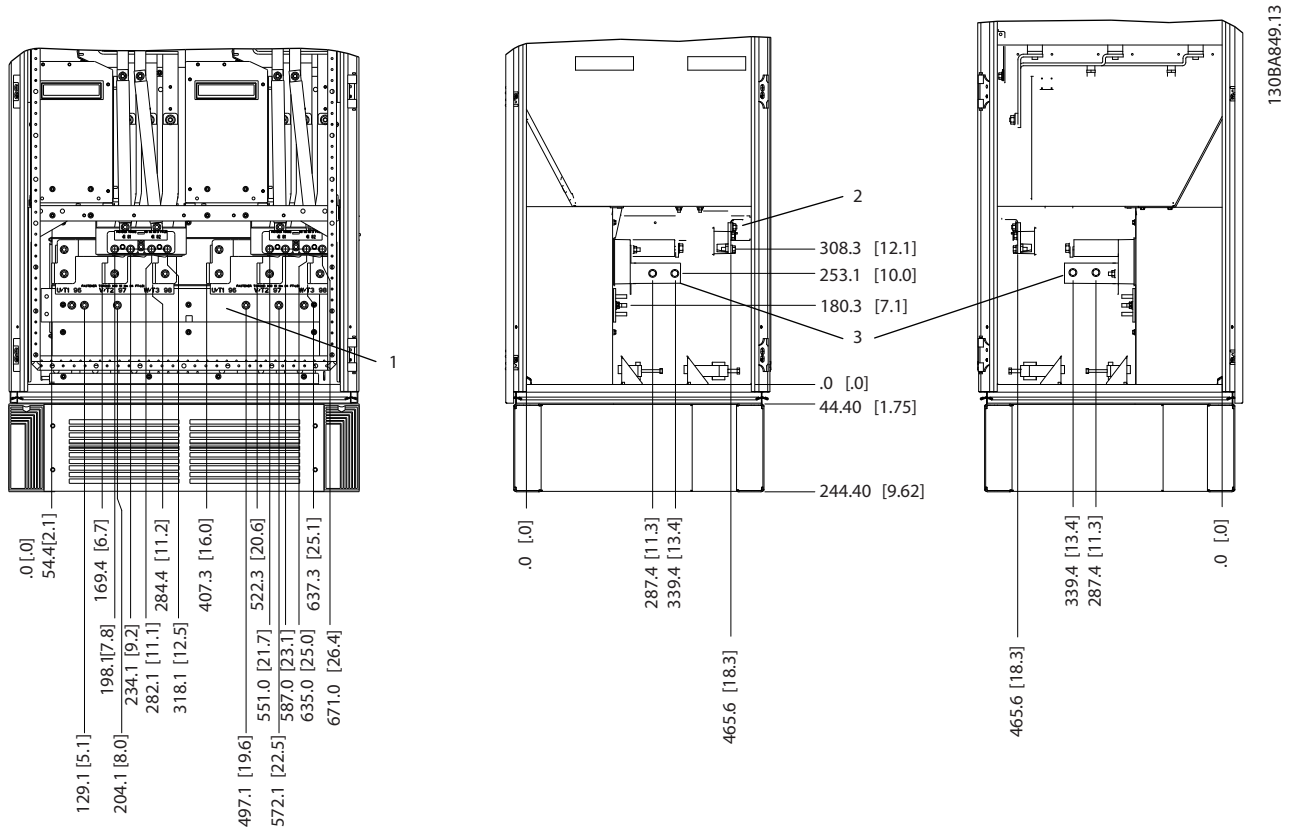

1	Ground bar
2	Motor terminals
3	Brake terminals

Illustration 3.14 Terminal Locations – Left, Front, and Right Views. The gland plate is 42 mm (1.65 in) below 0.0 level.

3

3.2.4.3 Inverter, Enclosure Sizes F12 and F13

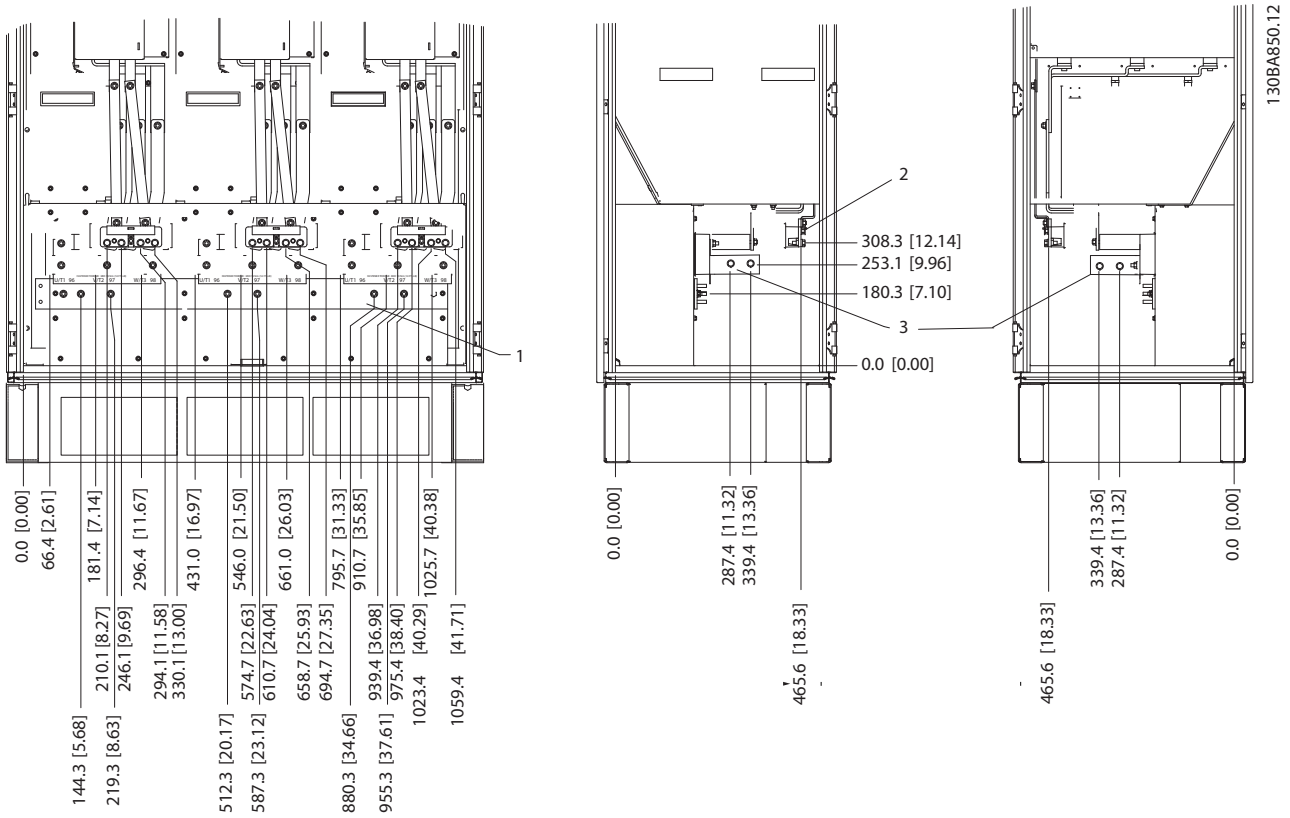

1	Ground bar
2	Motor terminals
3	Brake terminals

Illustration 3.15 Terminal Locations – Left, Front, and Right Views. The gland plate is 42 mm (1.65 in) below 0.0 level.

3.2.4.4 Inverter, Enclosure Sizes F14 and F15

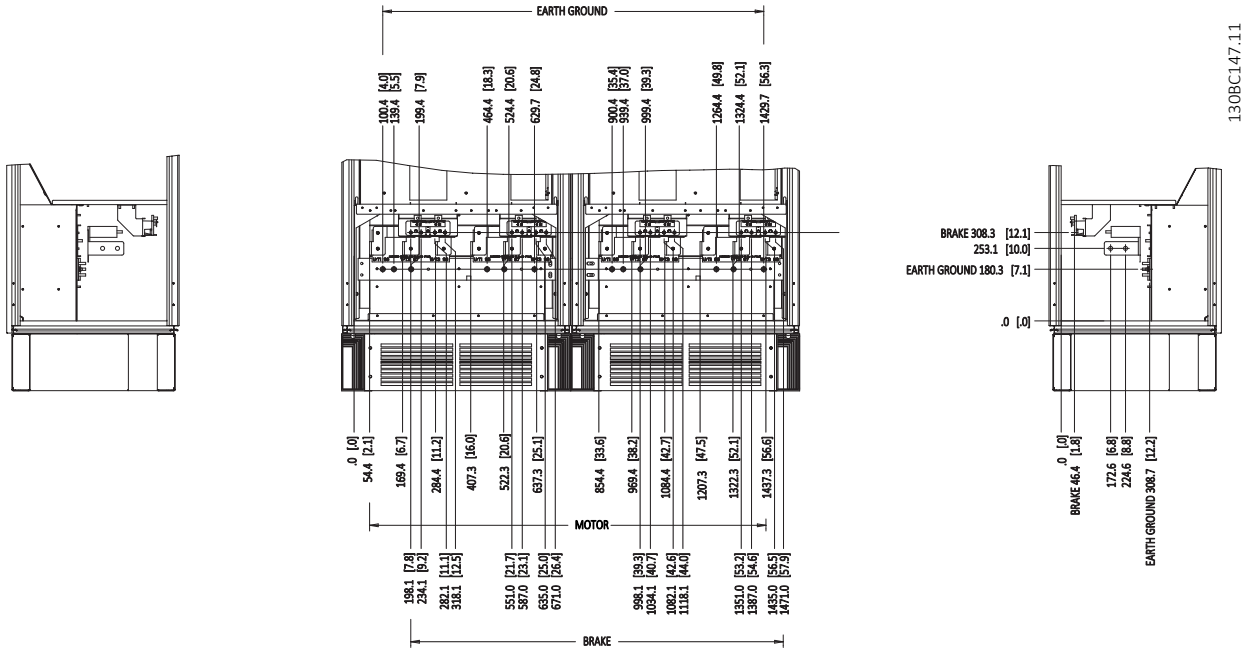

Illustration 3.16 Terminal Locations – Left, Front, and Right Views. The gland plate is 42 mm (1.65 in) below 0.0 level.

3

3.2.4.5 Rectifier, Enclosure Sizes F10, F11, F12, and F13

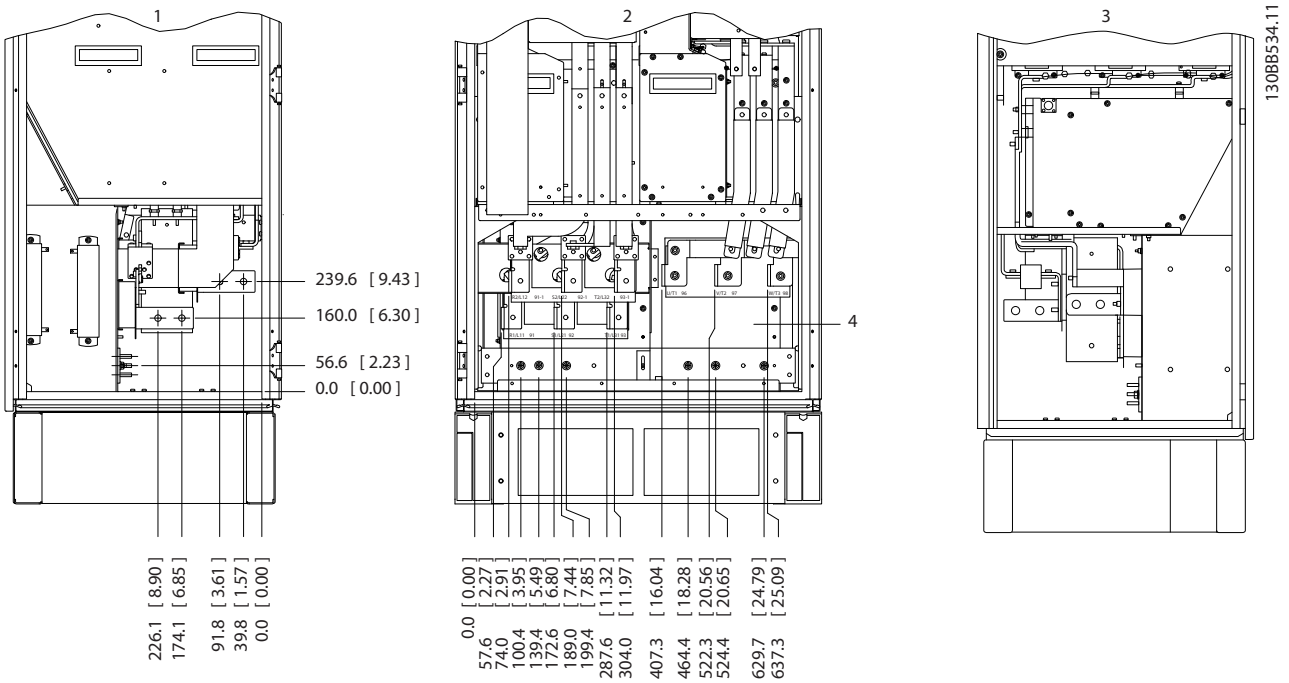

1	Left side view
2	Front view
3	Right side view
4	Ground bar

Illustration 3.17 Terminal Locations – Left, Front, and Right Views. The gland plate is 42 mm (1.65 in) below 0.0 level.

3.2.4.6 Rectifier, Enclosure Sizes F14 and F15

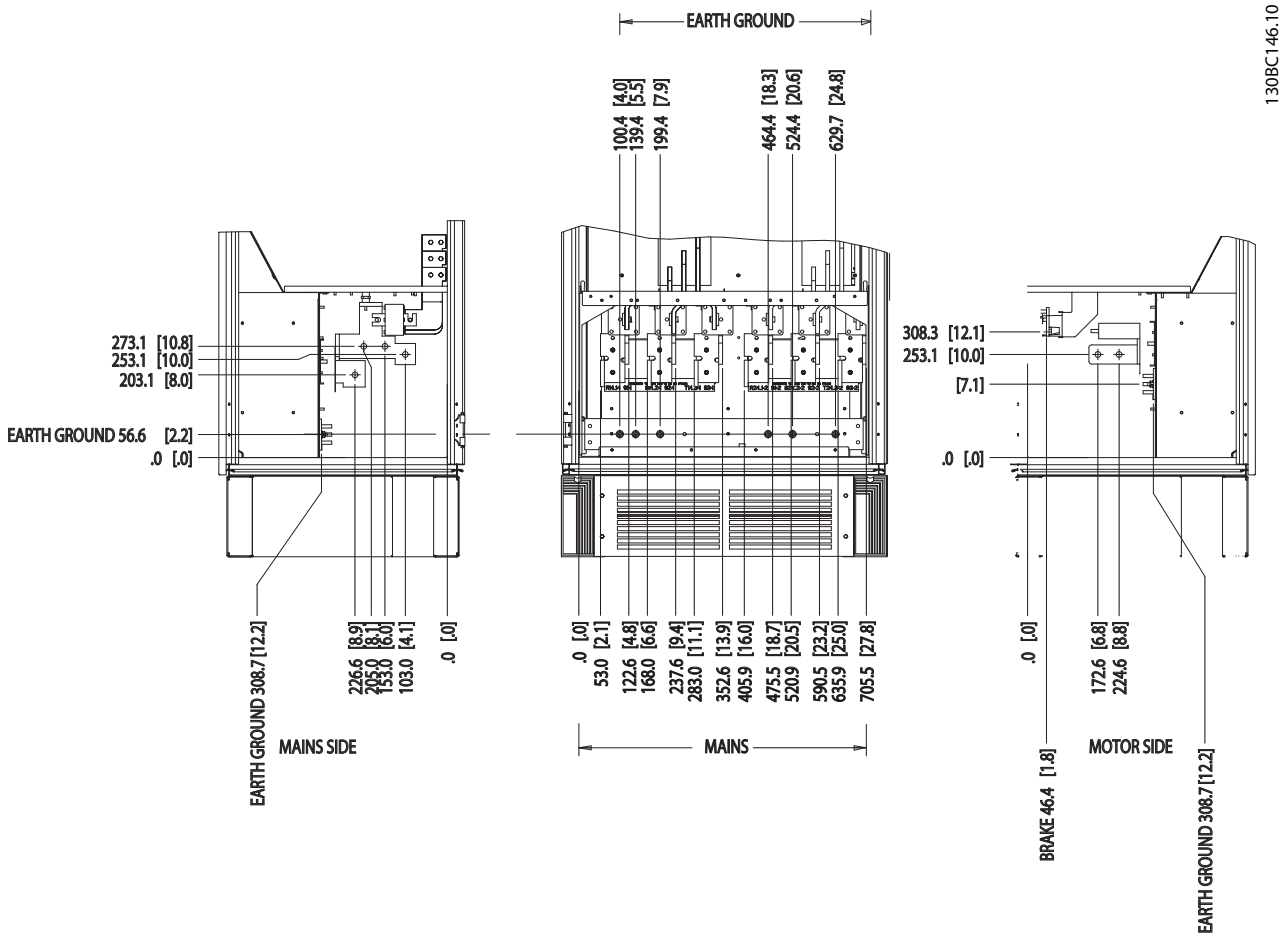

Illustration 3.18 Terminal Locations – Left, Front, and Right Views. The gland plate is 42 mm (1.65 in) below 0.0 level.

3

3.2.4.7 Options Cabinet, Enclosure Size F9

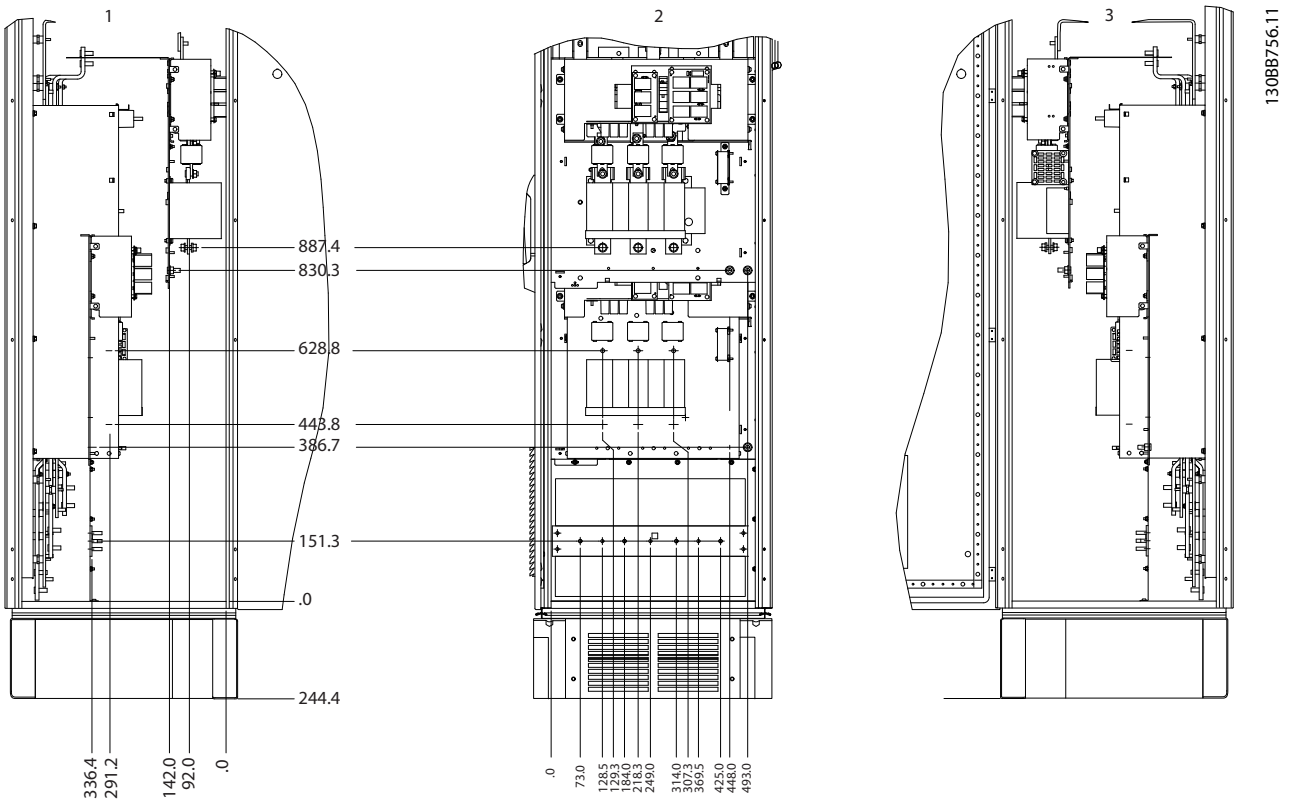

1	Left side view
2	Front view
3	Right side view

Illustration 3.19 Terminal Locations Options Cabinet, Enclosure Size F9

3.2.4.8 Options Cabinet, Enclosure Sizes F11 and F13

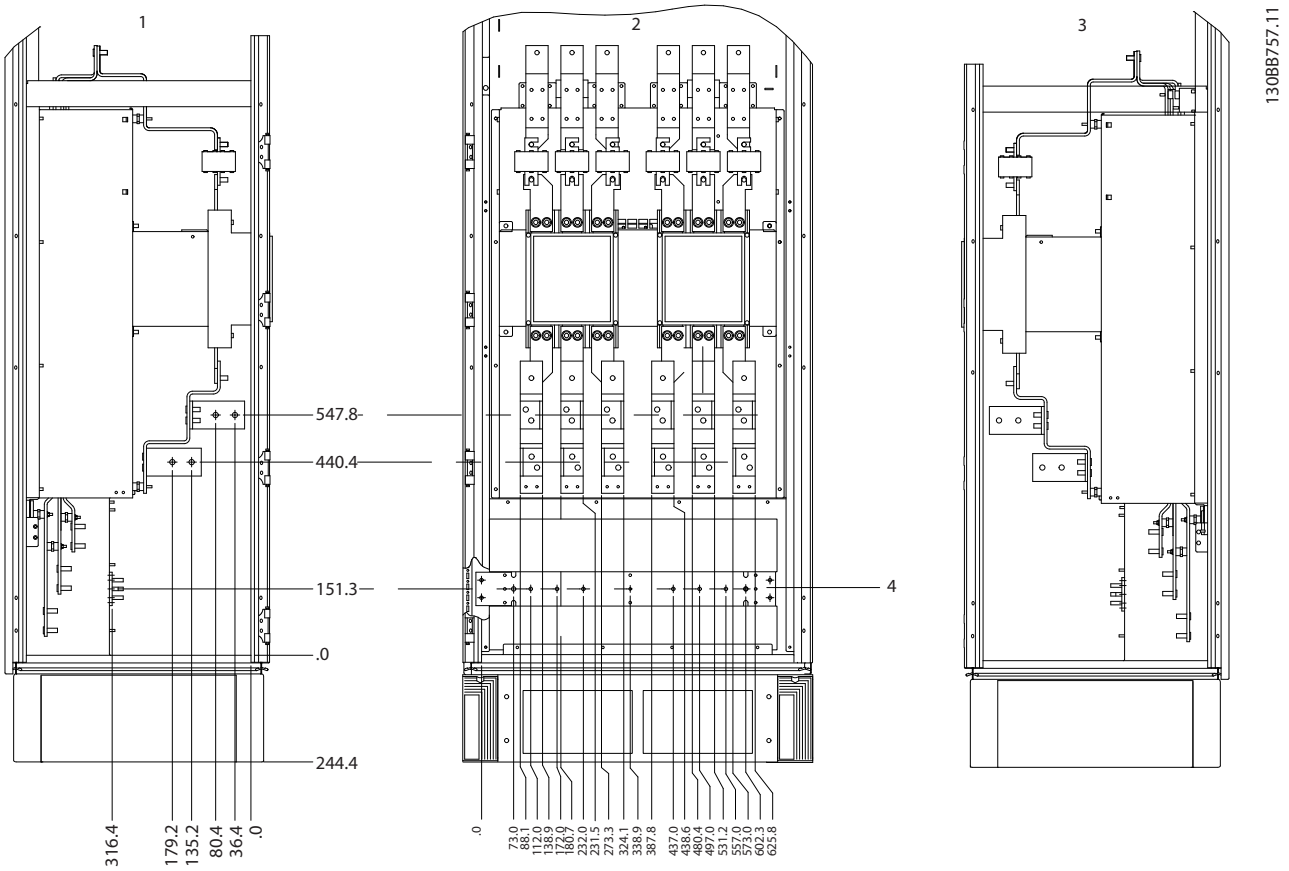

1	Left side view
2	Front view
3	Right side view
4	Ground bar

Illustration 3.20 Terminal Locations Options Cabinet, Enclosure Sizes F11 and F13

3

3.2.4.9 Options Cabinet, Enclosure Size F15

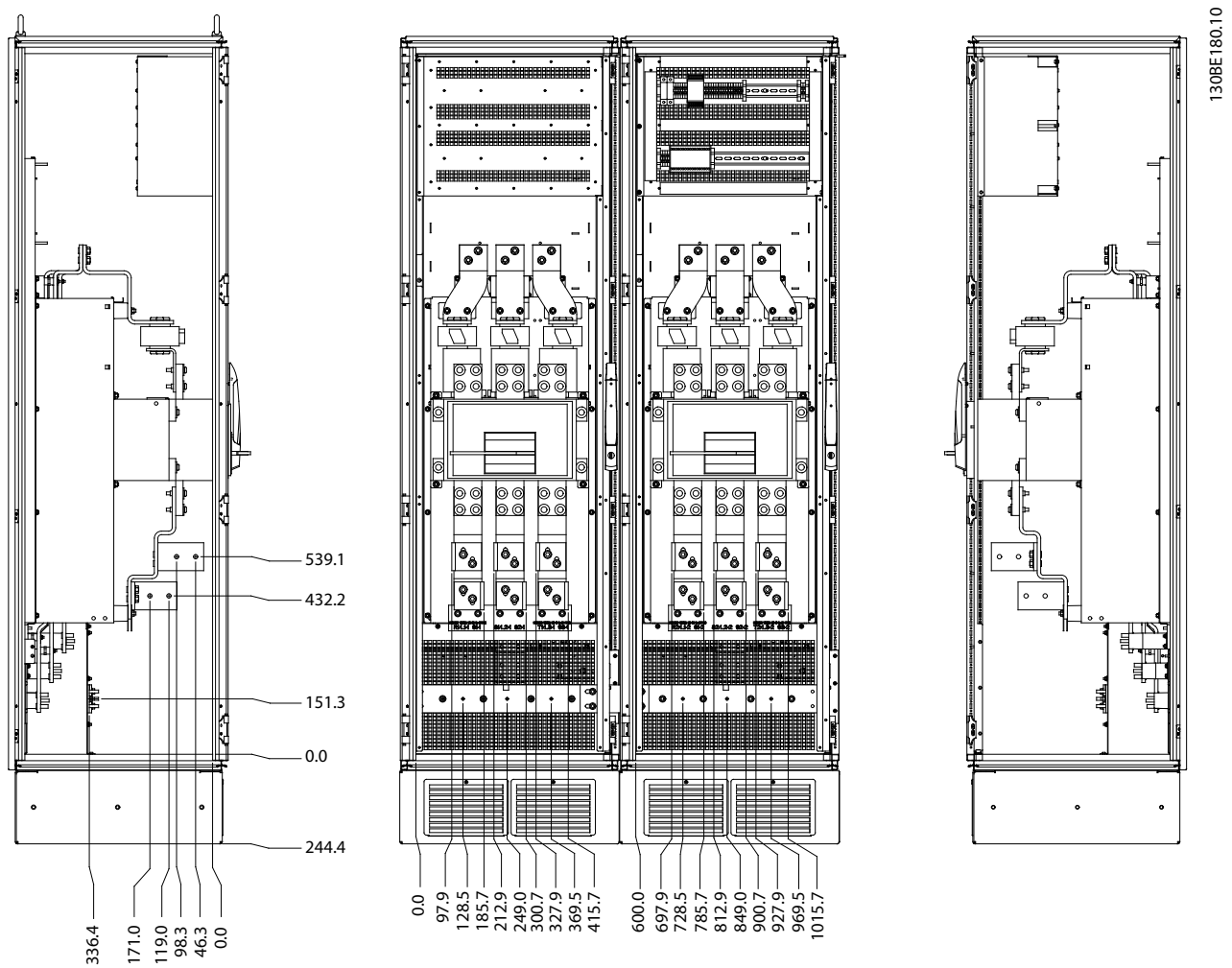

Illustration 3.21 Terminal Locations – Left, Front, and Right Views

3.2.5 Cooling and Airflow

Cooling

Cooling can be achieved in different ways:

- By using the cooling ducts at the top and bottom of the unit.
- By taking air in and out the back of the unit.
- By combining the cooling methods.

Duct cooling

A dedicated option has been developed to optimize the installation of frequency converters in Rittal TS8 enclosures utilizing the frequency converter fan for forced air cooling of the backchannel. The air out of the top of the enclosure could be ducted outside a facility so the heat losses from the backchannel are not dissipated within the control room. Ducting the air outside the facility ultimately reduces the air-conditioning requirements of the facility.

Back cooling

The backchannel air can also be ventilated in and out of the back of a Rittal TS8 enclosure. The backchannel takes cool air from outside the facility and returns warm air to outside the facility, thus reducing air-conditioning requirements.

Airflow

Ensure sufficient airflow over the heat sink. The flow rate is shown in *Table 3.8*.

Enclosure protection	Door fans/Top fan airflow	Heat sink fans
IP21/NEMA 1	700 m^3/h (412 cfm)[1)]	985 m^3/h (580 cfm)[1)]
IP54/NEMA 12	525 m^3/h (309 cfm)[1)]	985 m^3/h (580 cfm)[1)]

Table 3.8 Heat Sink Air Flow

1) Airflow per fan. Enclosure sizes F contain multiple fans.

The fan runs for the following reasons:

- AMA.
- DC Hold.
- Pre-Mag.
- DC Brake.
- 60% of nominal current is exceeded.
- Specific heat sink temperature exceeded (power size dependent).

The fan runs for minimum 10 minutes.

External ducts

If more duct work is added externally to the Rittal cabinet, calculate the pressure drop in the ducting. To derate the frequency converter according to the pressure drop, refer to *Illustration 3.22*.

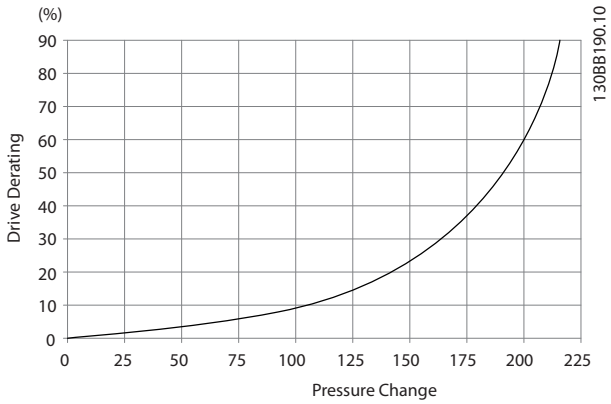

Illustration 3.22 Enclosure Size F, Derating vs. Pressure Change (Pa)

Drive air flow: 985 m³/h (580 cfm)

3.2.6 Gland/Conduit Entry – IP21 (NEMA 1) and IP54 (NEMA12)

Cables are connected through the gland plate from the bottom. Remove the plate and plan where to place the entry for the glands or conduits. Prepare holes in the shaded areas on the drawings in *Illustration 3.24* to *Illustration 3.31*.

NOTICE

To ensure the specified protection degree, and proper cooling of the unit, fit the gland plate to the frequency converter. If the gland plate is not mounted, the frequency converter may trip on *alarm 69, Pwr. Card Temp*

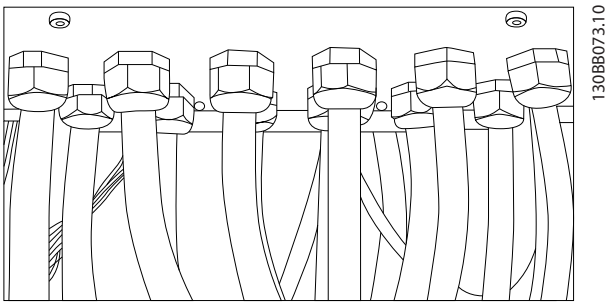

Illustration 3.23 Example of Proper Installation of the Gland Plate

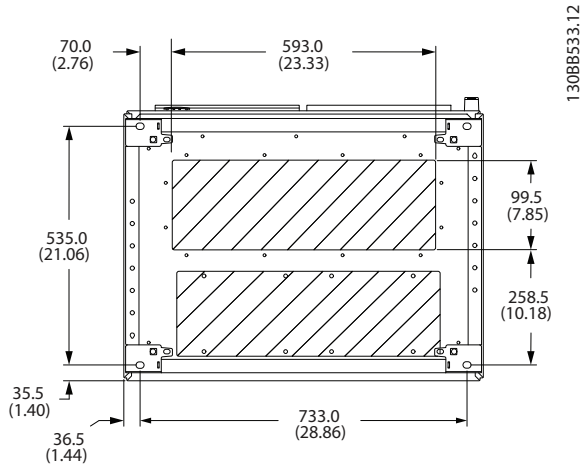

Illustration 3.24 F8, Cable Entry Viewed from the Bottom of the Frequency Converter

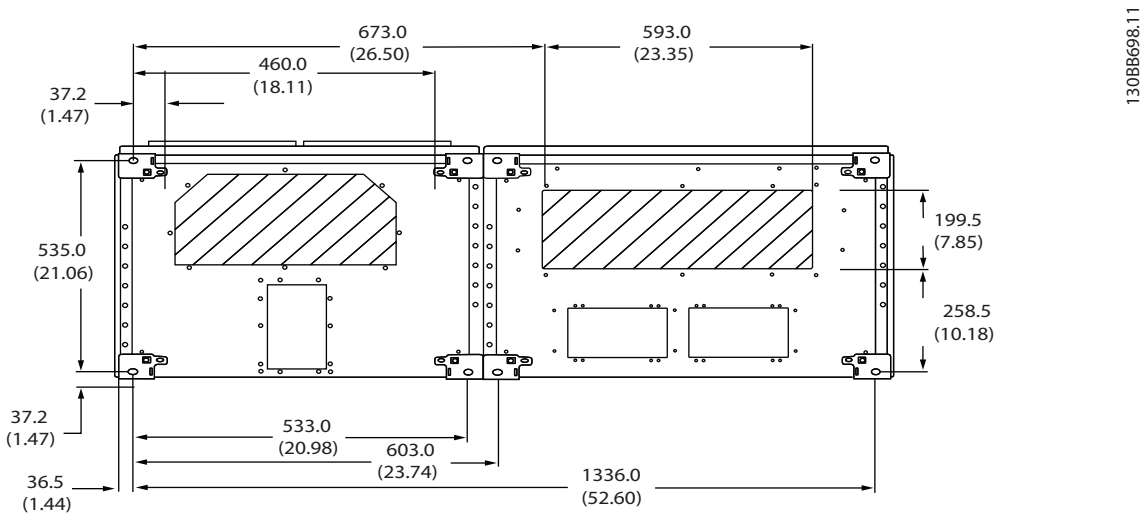

Illustration 3.25 F9, Cable Entry Viewed from the Bottom of the Frequency Converter

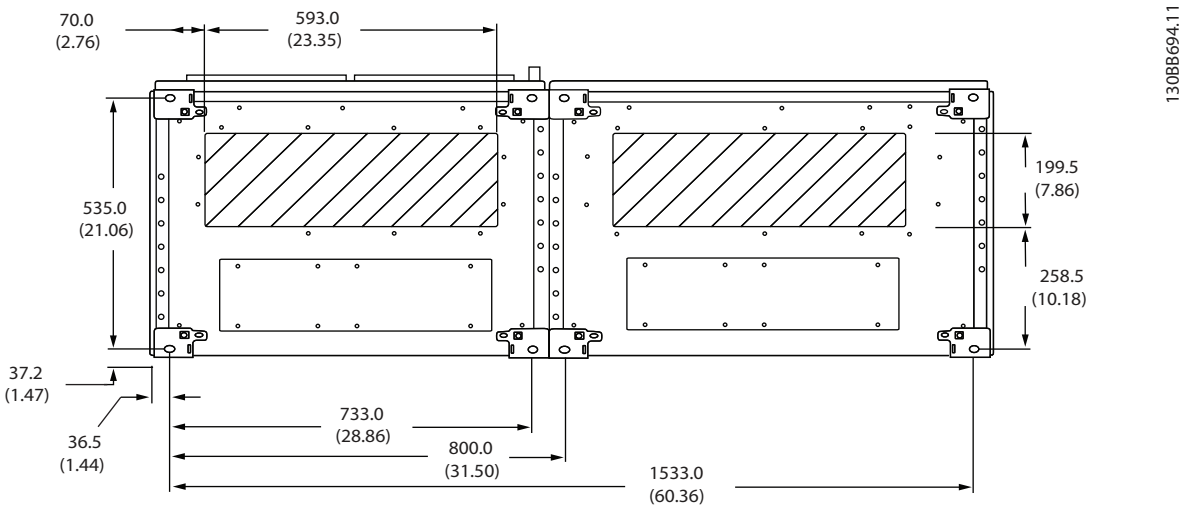

Illustration 3.26 F10, Cable Entry Viewed from the Bottom of the Frequency Converter

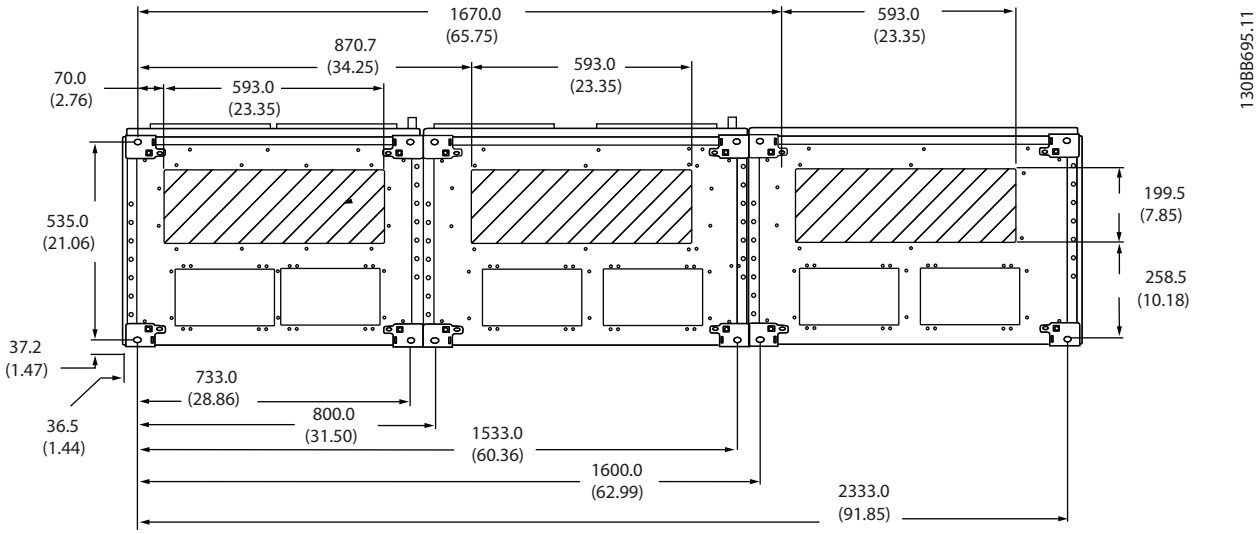

Illustration 3.27 F11, Cable Entry Viewed from the Bottom of the Frequency Converter

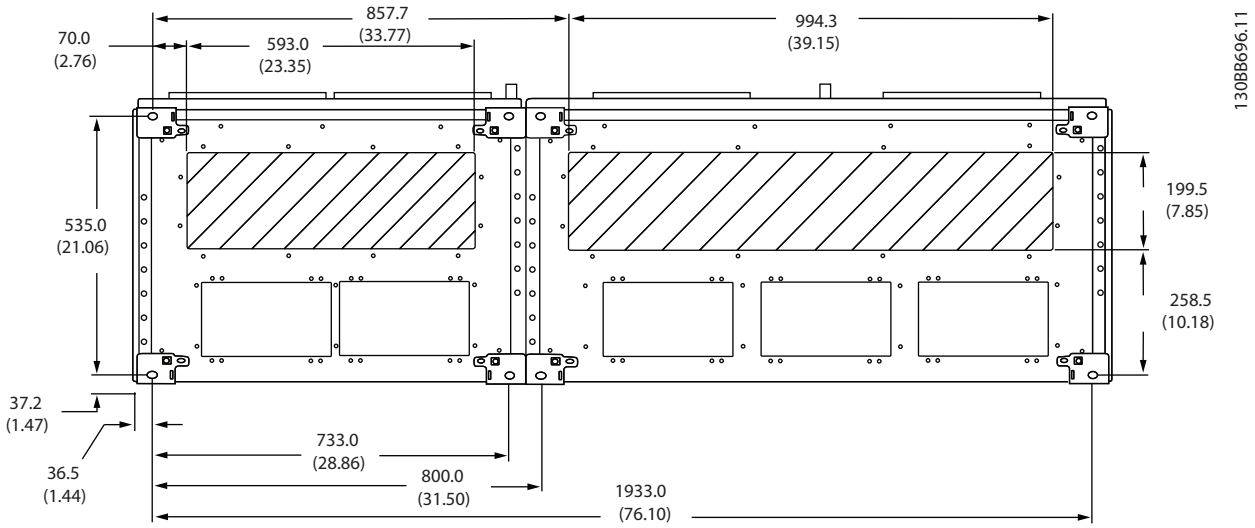

Illustration 3.28 F12, Cable Entry Viewed from the Bottom of the Frequency Converter

3

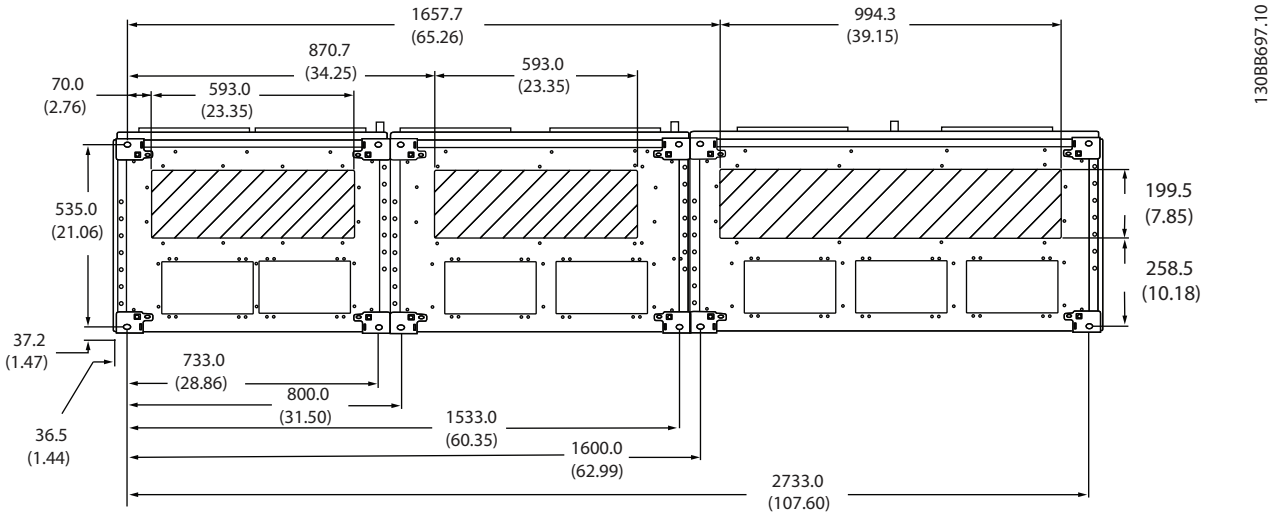

Illustration 3.29 F13, Cable Entry Viewed from the Bottom of the Frequency Converter

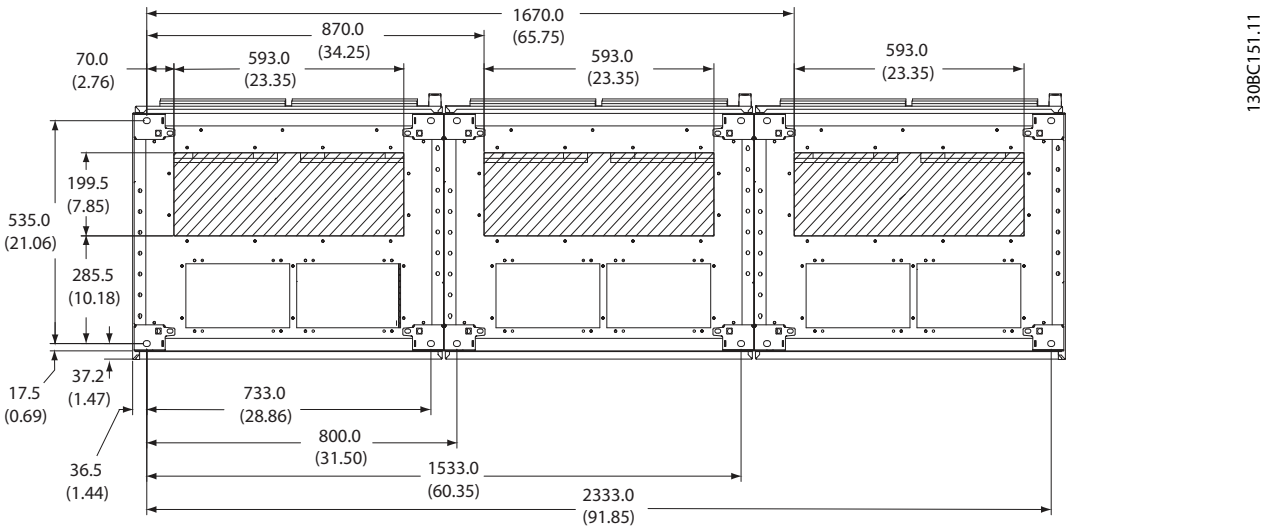

Illustration 3.30 F14, Cable Entry Viewed from the Bottom of the Frequency Converter

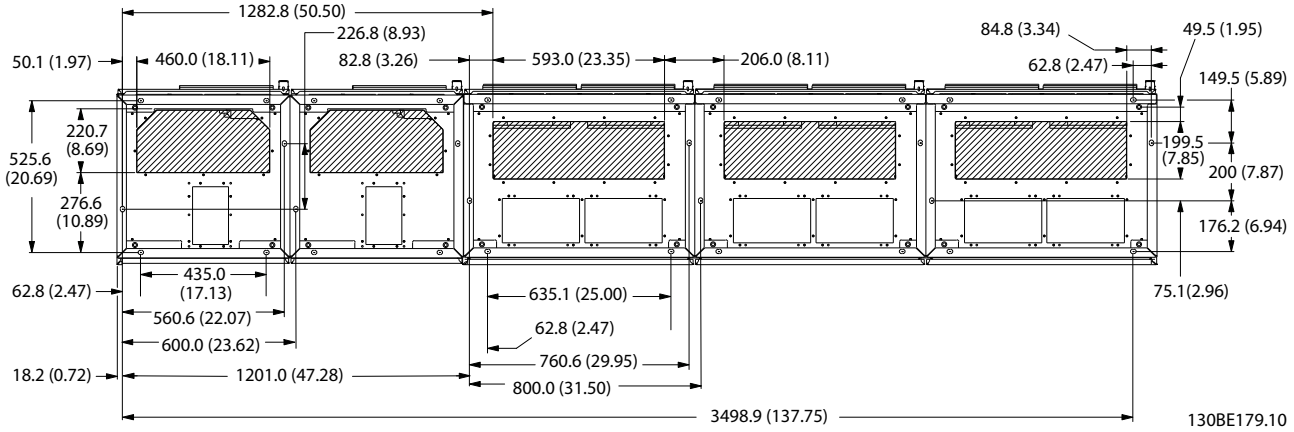

Illustration 3.31 F15, Cable Entry Viewed from the Bottom of the Frequency Converter

3.3 Installing the Panel Options

3.3.1 Panel Options

Space heaters and thermostat
Space heaters are mounted on the cabinet interior of enclosure size F10–F15 frequency converters. They are controlled via an automatic thermostat, and help control humidity inside the enclosure, by that extending the lifetime of frequency converter components in damp environments. The thermostat default settings turn on the heaters at 10 °C (50 °F) and turn them off at 15.6 °C (60 °F).

Cabinet light with power outlet
A light mounted on the cabinet interior of enclosure size F10–F15 frequency converters increases visibility during servicing and maintenance.

The housing light includes a power outlet for temporarily powering tools or other devices, available in 2 voltages:

- 230 V, 50 Hz, 2.5 A, CE/ENEC
- 120 V, 60 Hz, 5 A, UL/cUL

Transformer tap set-up
If the cabinet light with power outlet, and/or the space heaters and thermostat are installed, transformer T1 requires the taps to be set to the proper input voltage. A 380–480/500 V unit is initially set to the 525 V tap and a 525–690 V unit is set to the 690 V tap. This initial setting ensures that no overvoltage of secondary equipment occurs if the tap is not changed before power is applied. To set the proper tap at terminal T1, located in the rectifier cabinet, see *Table 3.9*. For location in the frequency converter, see the illustration of the rectifier in *Illustration 3.32*.

Input voltage range [V]	Tap to select [V]
380–440	400
441–490	460
491–550	525
551–625	575
626–660	660
661–690	690

Table 3.9 Transformer Tap Setting

NAMUR terminals
NAMUR is an international association of automation technology users in the process industries, primarily chemical and pharmaceutical industries in Germany. Selection of this option provides terminals organized and labeled to the specifications of the NAMUR standard for frequency converter input and output terminals. This selection requires a VLT® PTC Thermistor Card MCB 112 and a VLT® Extended Relay Card MCB 113.

RCD (residual current device)
Uses the core balance method to monitor ground fault currents in grounded and high-resistance grounded systems (TN and TT systems in IEC terminology). There is a prewarning (50% of main alarm setpoint) and a main alarm setpoint. Associated with each setpoint is an SPDT alarm relay for external use. Requires an external *window-type* current transformer (not supplied).

- Integrated into the frequency converter's safe-stop circuit.
- IEC 60755 Type B device monitors AC, pulsed DC, and pure DC ground fault currents.
- LED bar graph indicator of the ground fault current level from 10–100% of the setpoint.
- Fault memory.
- TEST/RESET key.

IRM (insulation resistance monitor)
Monitors the insulation resistance in ungrounded systems (IT systems in IEC terminology) between the system phase conductors and ground. There is an ohmic prewarning and a main alarm setpoint for the insulation level. Associated with each setpoint is an SPDT alarm relay for external use.

NOTICE

Only 1 insulation resistance monitor can be connected to each ungrounded (IT) system.

- Integrated into the frequency converter's safe-stop circuit.
- LCD display of the ohmic value of the insulation resistance.
- Fault memory.
- [Info], [Test], and [Reset] keys

Manual motor starters
Provide 3-phase power for electric blowers often required for larger motors. Power for the starters is provided from the load side of any supplied contactor, circuit breaker, or disconnect switch. Power is fused before each motor starter and is off when the incoming power to the frequency converter is off. Up to 2 starters are allowed (only 1 if a 30 A, fuse-protected circuit is ordered).

The manual motor starter is integrated into the frequency converter's STO and includes the following features:

- Operation switch (on/off).
- Short circuit and overload protection with test function.
- Manual reset function.

30 A, fuse-protected terminals

- 3-phase power matching incoming mains voltage for powering auxiliary customer equipment.
- Not available if 2 manual motor starters are selected.
- Terminals are off when the incoming power to the frequency converter is off.
- Power for the fused protected terminals is provided from the load side of any supplied circuit breaker or disconnect switch.

24 V DC supply

- 5 A, 120 W, 24 V DC.
- Protected against output overcurrent, overload, short circuits, and overtemperature.
- For powering 3rd party accessory devices such as sensors, PLC I/O, contactors, temperature probes, indicator lights, and/or other electronic hardware.
- Diagnostics include a dry DC-ok contact, a green DC-ok LED, and a red overload LED.

External temperature monitoring
Designed for monitoring temperatures of external system components, such as the motor windings and/or bearings. Includes 8 universal input modules plus 2 dedicated thermistor input modules. All 10 modules are integrated into the frequency converter's STO circuit and can be monitored via a fieldbus network (requires a separate module/bus coupler).

Universal inputs (8) – signal types

- RTD inputs (including Pt100), 3-wire, or 4-wire.
- Thermocouple.
- Analog current or analog voltage.

Extra features:

- 1 universal output, configurable for analog voltage, or analog current.
- 2 output relays (NO).
- Dual-line LC display and LED diagnostics.
- Sensor lead wire break, short circuit, and incorrect polarity detection.
- Interface set-up software.

Dedicated thermistor inputs (2) – features

NOTICE

If the frequency converter is connected to a thermistor, the thermistor control wires must be reinforced/double insulated for PELV isolation. A 24 V DC supply for the thermistor power is recommended.

- Each module can monitor up to 6 thermistors in series.
- Fault diagnostics for wire breakage or short circuits of sensor leads.
- ATEX/UL/CSA certification.
- A third thermistor input can be provided by the VLT® PTC Thermistor Card MCB 112, if necessary.

3.4 Electrical Installation

See *chapter 2 Safety Instructions* for general safety instructions.

WARNING

HIGH VOLTAGE

Frequency converters contain high voltage when connected to AC mains input, DC supply, or load sharing. Failure to perform installation, start-up, and maintenance by qualified personnel can result in death or serious injury.

- **Only qualified personnel must perform installation, start-up, and maintenance.**

WARNING

INDUCED VOLTAGE

Induced voltage from output motor cables from different frequency converters that are run together can charge equipment capacitors even with the equipment turned off and locked out. Failure to run output motor cables separately or use shielded cables could result in death or serious injury.

- **Run output motor cables separately, or**
- **Use shielded cables.**
- **Simultaneously lock out all the frequency converters.**

WARNING

SHOCK HAZARD

The frequency converter can cause a DC current in the PE conductor and thus result in death or serious injury.

- **When a residual current-operated protective device (RCD) is used for protection against electrical shock, only an RCD of Type B is permitted on the supply side.**

Failure to follow the recommendation means that the RCD cannot provide the intended protection.

Overcurrent protection

- Extra protective equipment such as short-circuit protection or motor thermal protection between frequency converter and motor is required for applications with multiple motors.
- Input fusing is required to provide short circuit and overcurrent protection. If fuses are not factory-supplied, the installer must provide them. See maximum fuse ratings in *chapter 3.4.13 Fuses*.

3

Wire type and ratings

- All wiring must comply with local and national regulations regarding cross-section and ambient temperature requirements.
- Power connection wire recommendation: Minimum 75 °C (167 °F) rated copper wire.

See *chapter 5.6 Electrical Data* for recommended wire sizes and types.

⚠CAUTION

PROPERTY DAMAGE!

Protection against motor overload is not included in the default setting. To add this function, set *parameter 1-90 Motor Thermal Protection* to *[ETR trip]* or *[ETR warning]*. For the North American market, the ETR function provides class 20 motor overload protection in accordance with NEC. Failure to set *parameter 1-90 Motor Thermal Protection* to *[ETR trip]* or *[ETR warning]* means that motor overload protection is not provided and property damage can occur if the motor overheats.

3.4.1 Transformer Selection

Use the frequency converter with a 12-pulse isolation transformer.

3.4.2 Power Connections

Cabling and fusing

NOTICE

All cabling must comply with national and local regulations on cable cross-sections and ambient temperature. UL applications require 75 °C copper conductors. 75 °C (167 °F) and 90 °C (194 °F) copper conductors are thermally acceptable for the frequency converter to use in non-UL applications.

The power cable connections are located as in *Illustration 3.32*. Dimensioning of the cable cross-section must be done in accordance with the current ratings and local legislation. See *chapter 5.1 Mains Supply* for details.

For protection of the frequency converter, use the recommended fuses, or ensure that the unit has built-in fuses. Recommended fuses are detailed in in *chapter 3.4.13 Fuses*. Always ensure that fusing conforms to local regulations.

If the mains switch is included, the connection of mains is fitted to the mains switch.

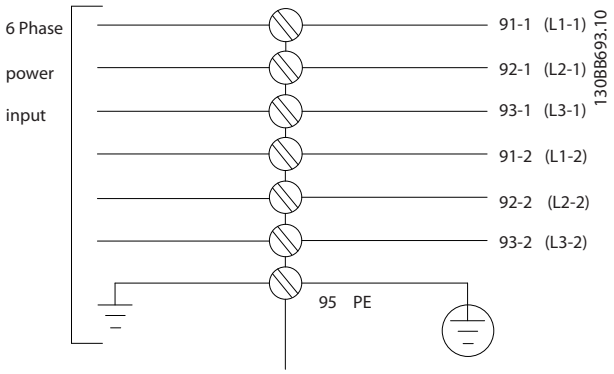

Illustration 3.32 Power Cable Connections

NOTICE

If an unshielded/unarmored cable is used, some EMC requirements are not complied with. To comply with EMC emission specifications, use a shielded/armored motor cable. For more information, see *EMC Specifications* in the product relevant *design guide*.

See *chapter 5.1 Mains Supply* for the correct dimensioning of the motor cable cross-section and length.

NOTICE

Only use the cross-section the field wiring terminals are designed for. The terminals do not accept a wire of 1 size large.

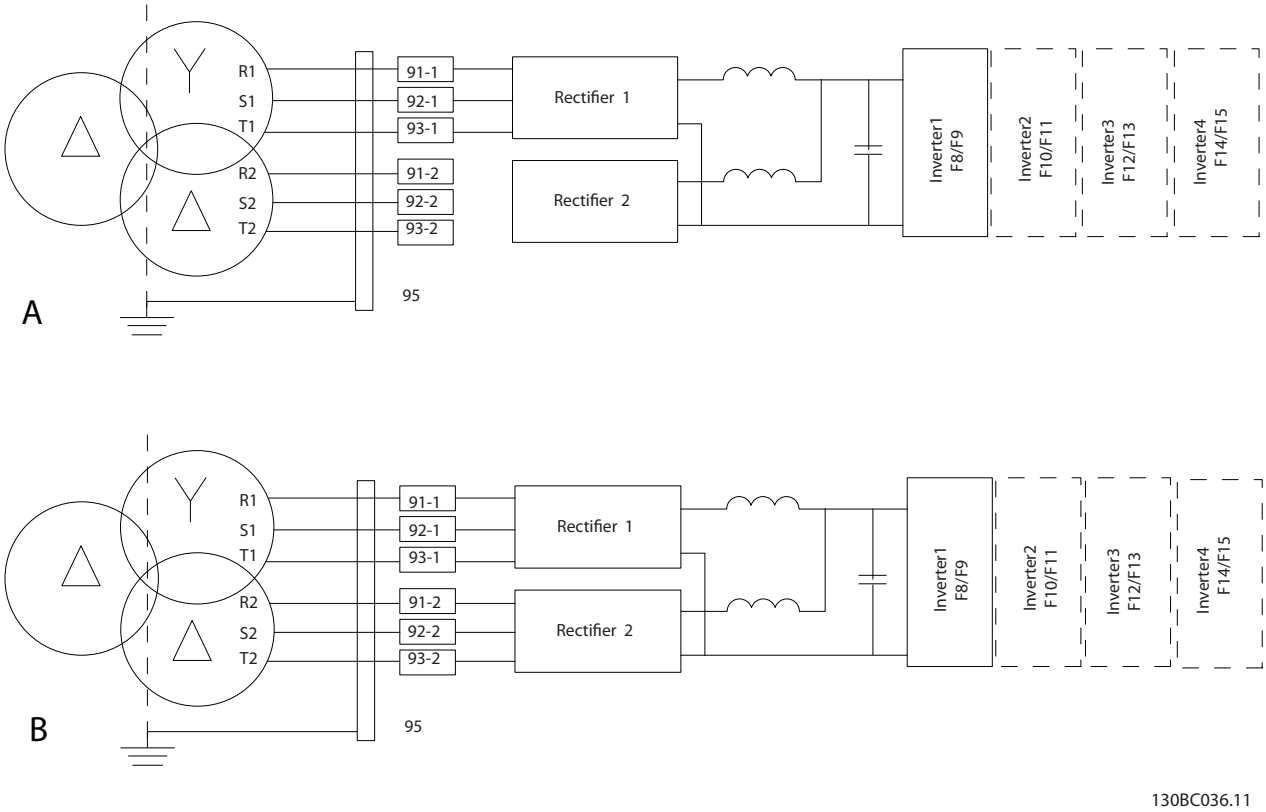

Illustration 3.33 A) Temporary 6-Pulse Connection[1)]
B) 12-Pulse Connection

Notes

1) When 1 of the rectifier modules is inoperable, use the operable rectifier module to run the frequency converter at a reduced power. Contact Danfoss for reconnection details.

3

Shielding of cables

Avoid installation with twisted shield ends (pigtails). They spoil the shielding effect at higher frequencies. If it is necessary to break the shield to install a motor isolator or motor contactor, the shield must be continued at the lowest possible HF impedance.

Connect the motor cable shield to both the decoupling plate of the frequency converter and to the metal housing of the motor.

Make the shield connections with the largest possible surface area (cable clamp). For this purpose, use the supplied installation devices within the frequency converter.

Cable length and cross-section

The frequency converter has been EMC tested with a given cable length. Keep the motor cable as short as possible to reduce the noise level and leakage currents.

Switching frequency

When frequency converters are used with sine-wave filters to reduce the acoustic noise from a motor, set the switching frequency according to the instruction in *parameter 14-01 Switching Frequency*.

Term. no.				
96	**97**	**98**	**99**	
U	V	W	PE[1)]	Motor voltage 0–100% of mains voltage. 3 wires out of motor
U1	V1	W1	PE[1)]	Delta-connected
W2	U2	V2		6 wires out of motor
U1	V1	W1	PE[1)]	Star-connected U2, V2, W2 U2, V2, and W2 to be interconnected separately.

Table 3.10 Terminal Connections

1) Protective Earth connection

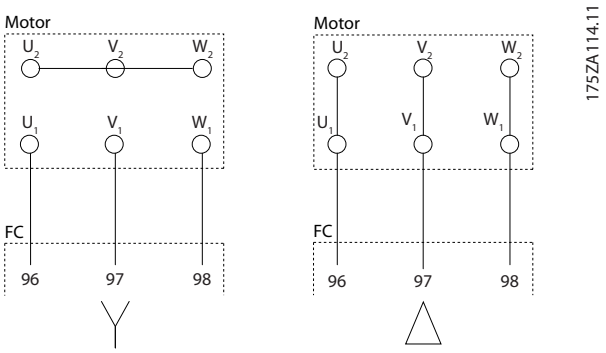

Illustration 3.34 Star and Delta Connections

NOTICE

In motors without phase insulation paper or other insulation reinforcement suitable for operation with voltage supply (such as a frequency converter), fit a sine-wave filter on the output of the frequency converter.

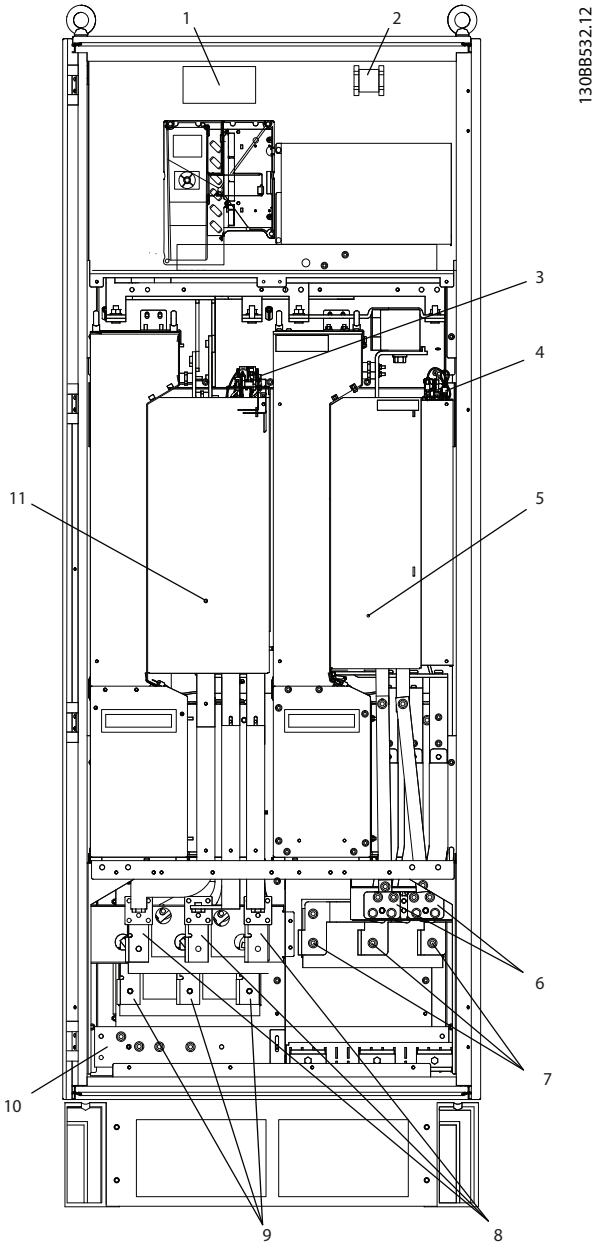

1	Brake resistor temperature switch
2	Auxiliary relay (01, 02, 03, 04, 05, 06)
3	SCR enable/disable
4	Auxiliary fan (100, 101, 102, 103)
5	Inverter module
6	Brake terminals 81 (-R), 82 (+R)
7	Motor connection T1 (U), T2 (V), T3 (W)
8	Mains L2-1 (R2), L2-2 (S2), L3-2 (T2)
9	Mains L1-1 (R1), L2-1 (S1), L3-1 (T1)
10	Ground PE terminals
11	12-pulse rectifier module

Illustration 3.35 Rectifier and Inverter Cabinet, Enclosure Sizes F8 and F9

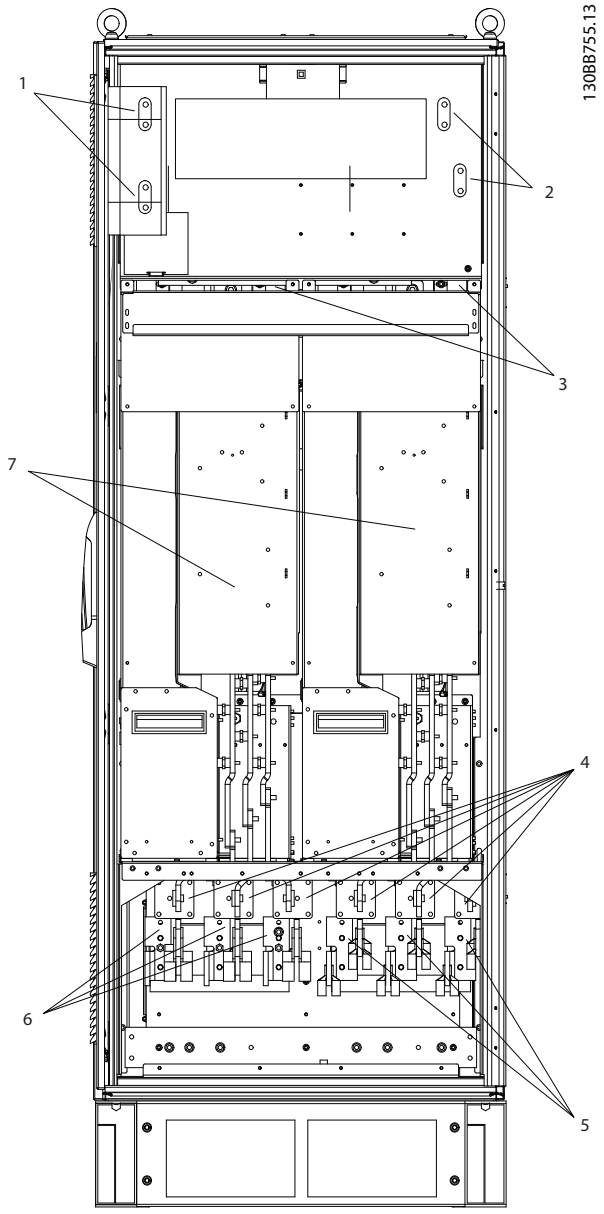

1	DC-bus connections for common DC-bus (DC+, DC-)
2	DC-bus connections for common DC-bus (DC+, DC-)
3	AUX fan (100, 101, 102, 103)
4	Mains fuses F10/F12 (6 pieces)
5	Mains L1-2 (R2), L2-2 (S2), L3-2 (T2)
6	Mains L1-1 (R1), L2-1 (S1), L3-1 (T1)
7	12-pulse rectifier module

Illustration 3.36 Rectifier Cabinet, Enclosure Sizes F10 and F12

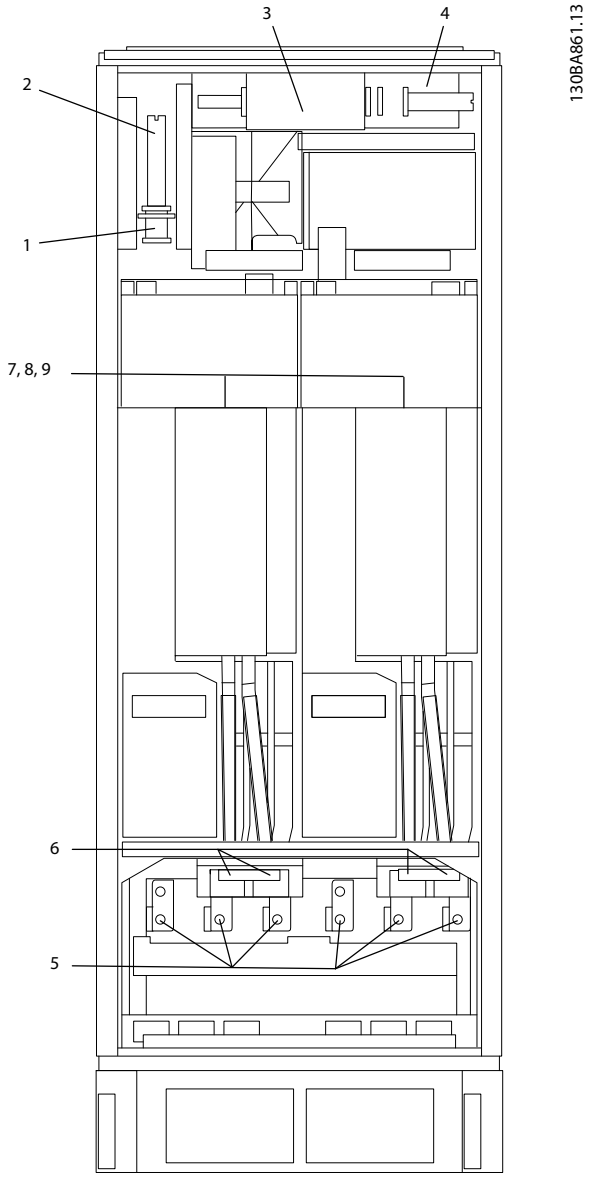

1	NAMUR fuse. See *Table 3.25* for part numbers.
2	NAMUR terminals (optional)
3	External temperature monitoring
4	AUX relay (01, 02, 03, 04, 05, 06)
5	Motor connection, 1 per module T1 (U), T2 (V), T3 (W)
6	Brake 81 (-R), 82 (+R)
7	AUX fan (100, 101, 102, 103)
8	Fan fuses. See *Table 3.22* for part numbers.
9	SMPS fuses. See *Table 3.21* for part numbers.

Illustration 3.37 Inverter Cabinet, Enclosure Sizes F10 and F11

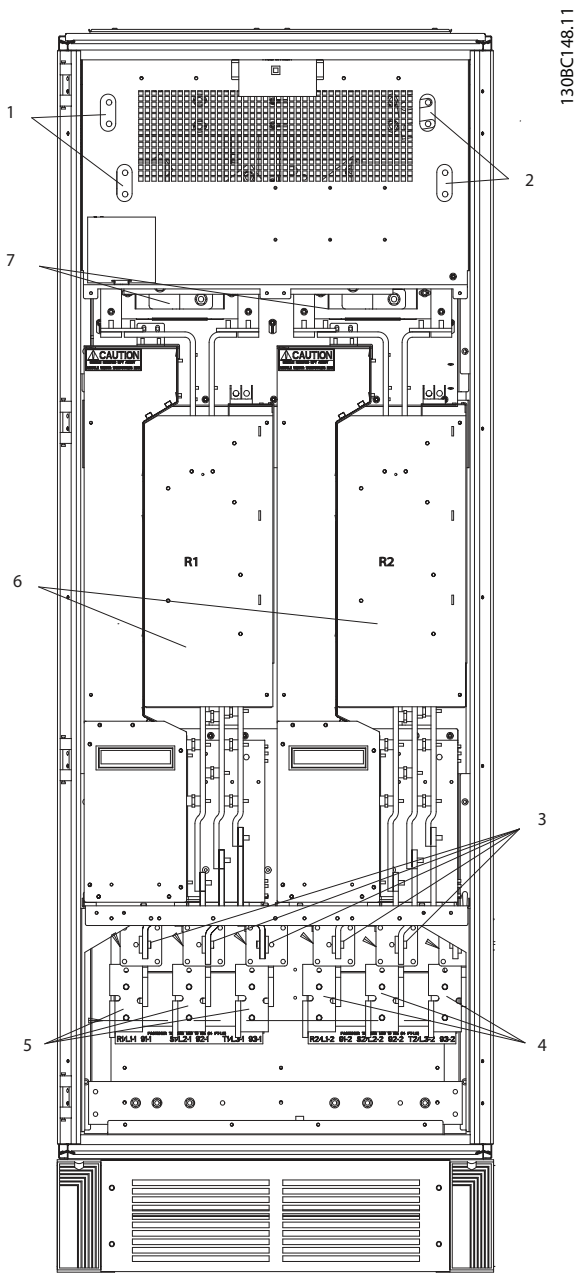

1	DC-busbar access
2	DC-busbar access
3	Mains fuses (6 pieces)
4	Mains L1-2 (R2), L2-2 (S2), L3-2 (T2)
5	Mains L1-1 (R1), L2-1 (S1), L3-1 (T1)
6	12-pulse rectifier modules
7	DC inductor

Illustration 3.38 Rectifier Cabinet, Enclosure Size F14 and F15

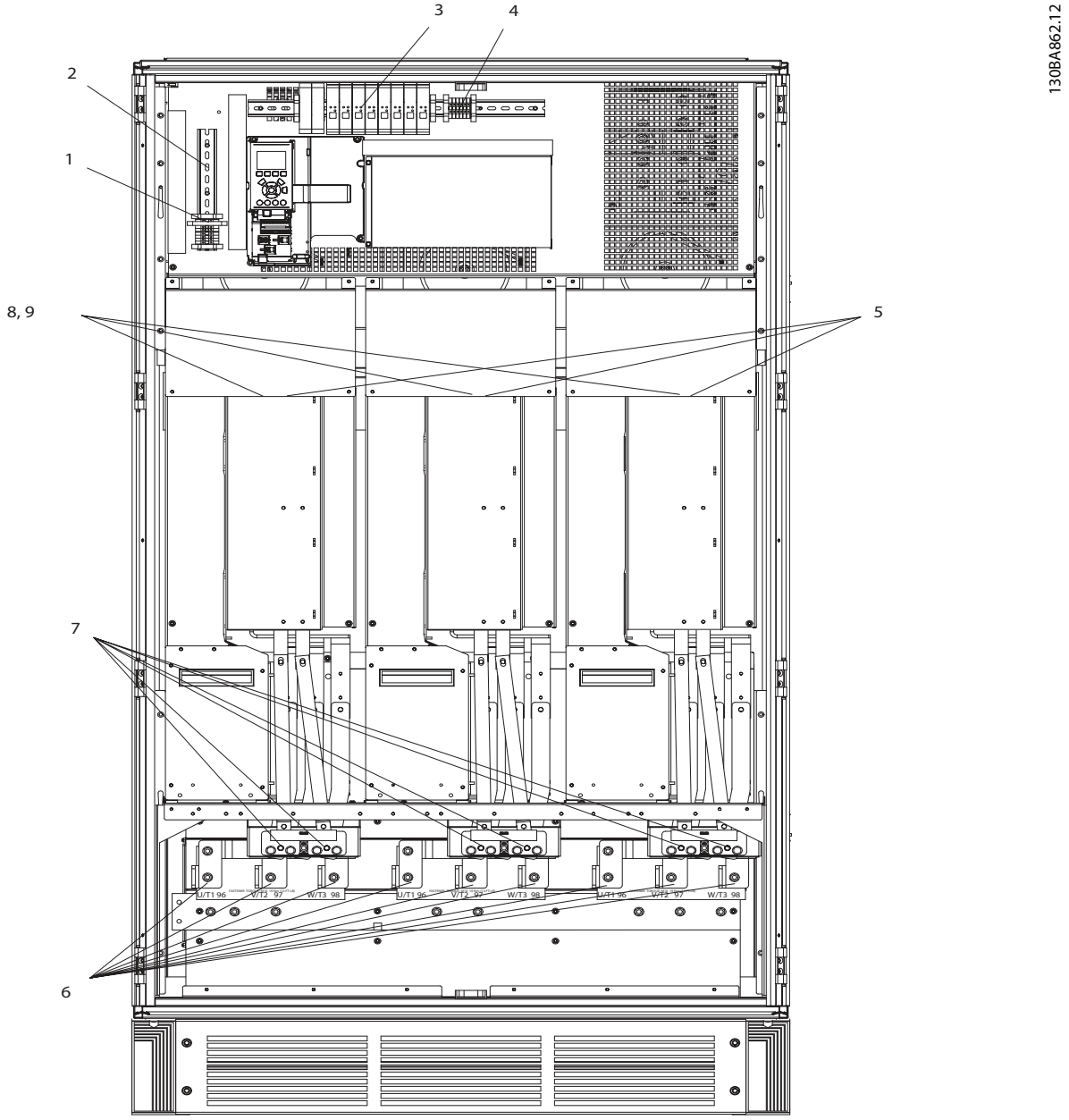

1	NAMUR fuse. See *Table 3.25* for part numbers.
2	NAMUR terminals (optional)
3	External temperature monitoring
4	AUX relay (01, 02, 03, 04, 05, 06)
5	AUX fan (100, 101, 102, 103)
6	Motor connection, 1 per module T1 (U), T2 (V), T3 (W)
7	Brake 81 (-R), 82 (+R)
8	Fan fuses. See *Table 3.22* for part numbers.
9	SMPS fuses. See *Table 3.21* for part numbers.

Illustration 3.39 Inverter Cabinet, Enclosure Sizes F12 and F13

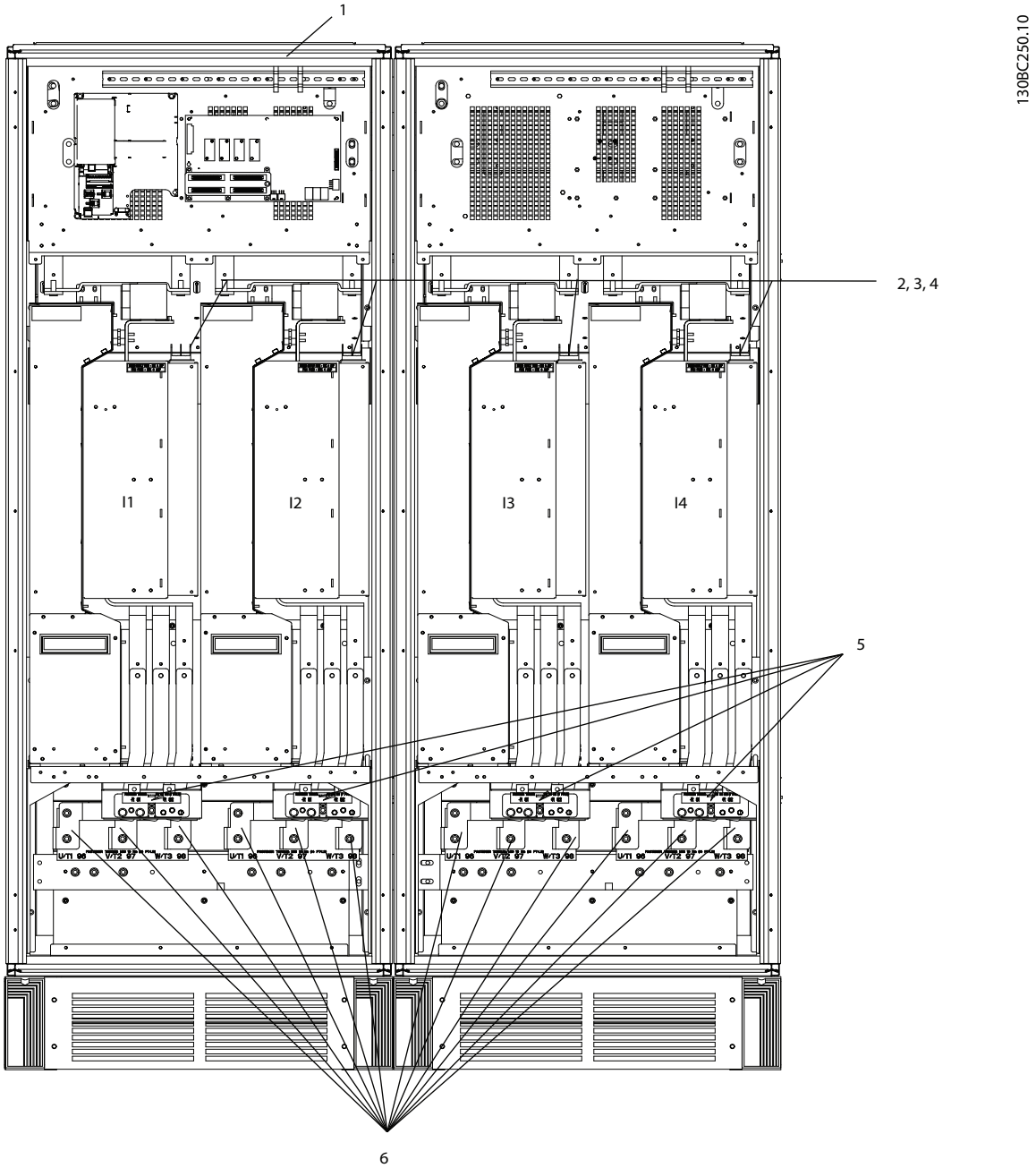

1	Auxiliary relay (01, 02, 03, 04, 05, 06)
2	AUX fan (100, 101, 102, 103)
3	Fan fuses. See *Table 3.22* for part numbers.
4	SMPS fuses. See *Table 3.21* for part numbers.
5	Brake 81 (-R), 82 (+R)
6	Motor connection, 1 per module T1 (U), T2 (V), T3 (W)

Illustration 3.40 Inverter Cabinet, Enclosure Size F14 and F15

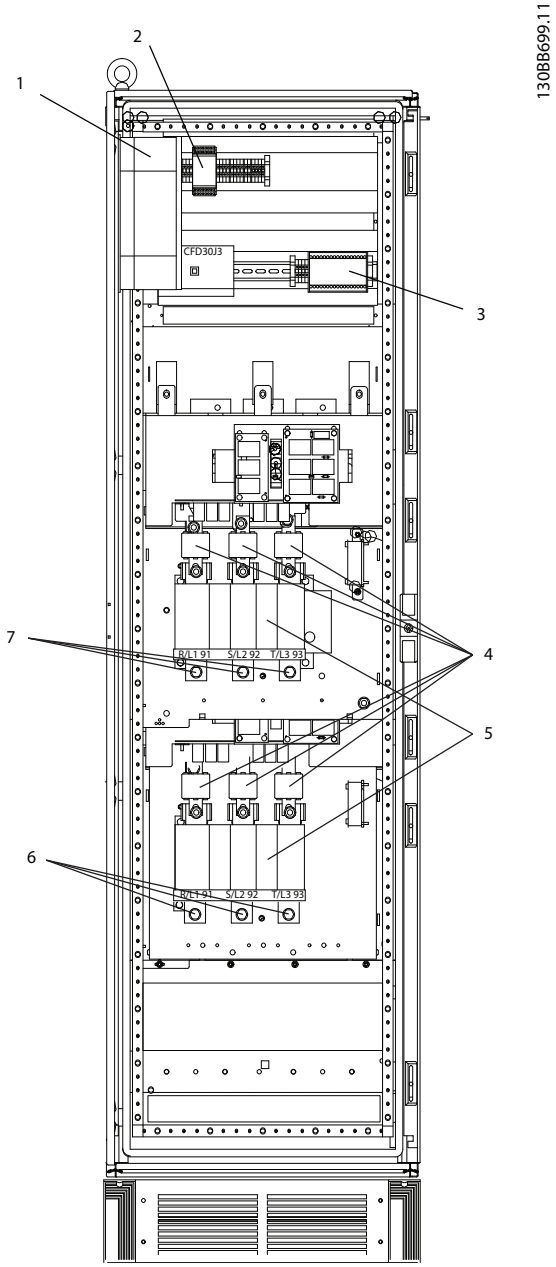

1	Safety relay coil fuse with Pilz relay
	See *chapter 3.4.14 Fuse Tables* for part numbers.
2	Pilz relay terminal
3	RCD or IRM terminal
4	Mains fuses (6 pieces)
	See *chapter 3.4.14 Fuse Tables* for part numbers.
5	2x3-phase manual disconnect
6	Mains L1-2 (R2), L2-2 (S2), L3-2 (T2)
7	Mains L1-1 (R1), L2-1 (S1), L3-1 (T1)

Illustration 3.41 Options Cabinet, Enclosure Size F9

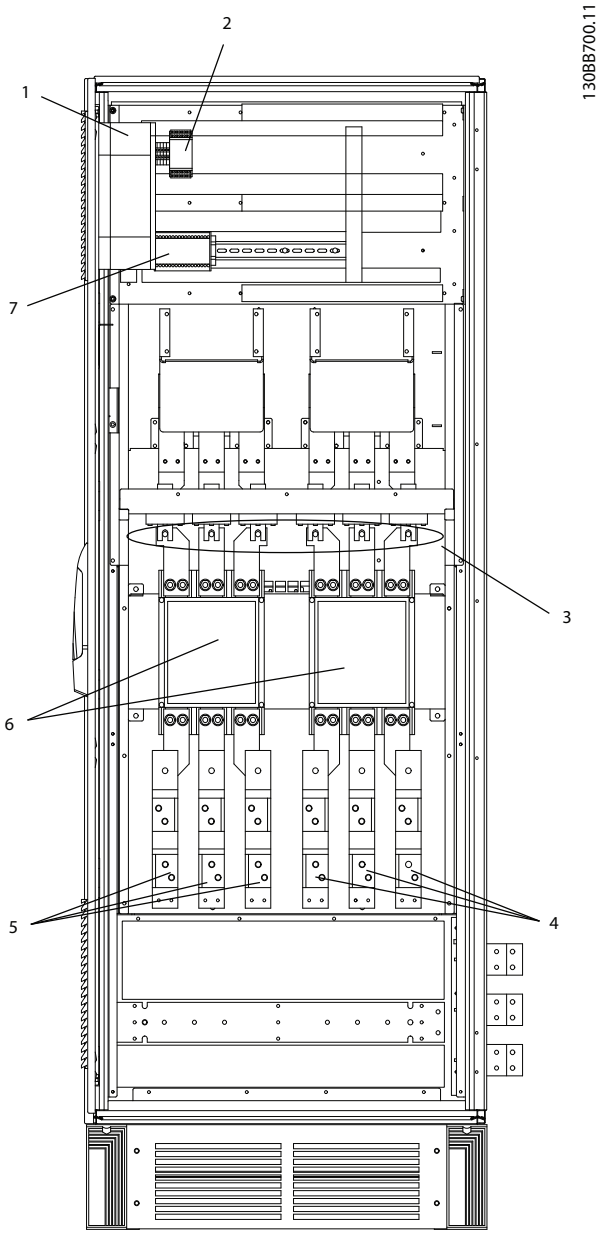

1	Safety relay coil fuse with Pilz relay
	See *chapter 3.4.14 Fuse Tables* for part numbers.
2	Pilz relay terminal
3	Mains fuses
	See *chapter 3.4.14 Fuse Tables* for part numbers.
4	Mains L1-2 (R2), L2-2 (S2), L3-2 (T2)
5	Mains L1-1 (R1), L2-1 (S1), L3-1 (T1)
6	2x3-phase manual disconnect
7	RCD or IRM terminal

Illustration 3.42 Options Cabinet, Enclosure Sizes F11 and F13

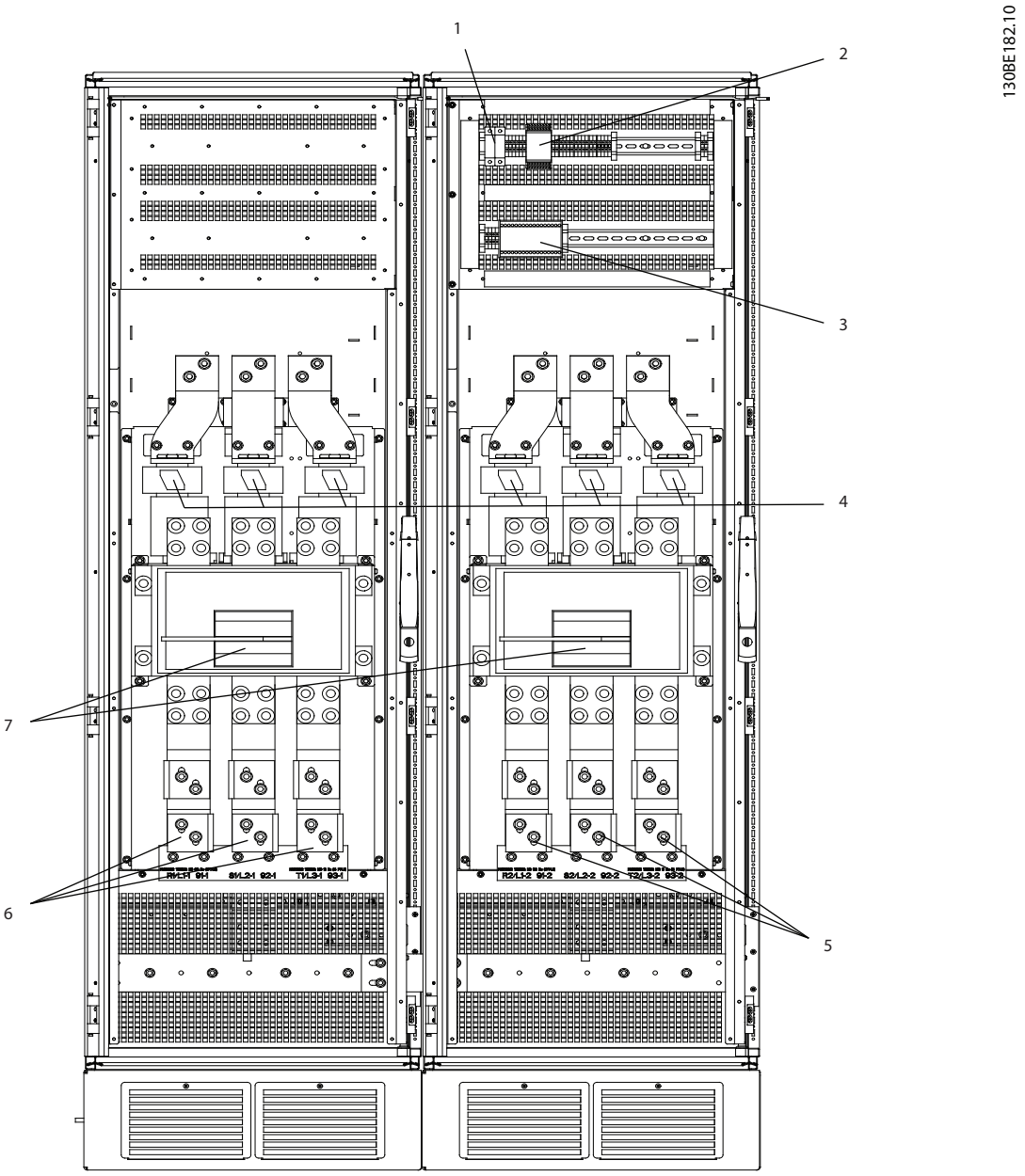

1	Safety relay coil fuse with Pilz relay
	See *chapter 3.4.14 Fuse Tables* for part numbers.
2	Pilz relay terminal
3	RCD or IRM terminal
4	Mains fuses (6 pieces)
	See *chapter 3.4.14 Fuse Tables* for part numbers.
5	Mains L1-2 (R2), L2-2 (S2), L3-2 (T2)
6	Mains L1-1 (R1), L2-1 (S1), L3-1 (T1)
7	2x3-phase manual disconnect

Illustration 3.43 Options Cabinet, Enclosure Size F15

3.4.3 Grounding

To obtain electromagnetic compatibility (EMC), consider the following basic issues when installing a frequency converter.

- Safety grounding: The frequency converter has a high leakage current (>3.5 mA) and must be grounded appropriately for safety reasons. Apply local safety regulations.
- High frequency grounding: Keep the ground wire connections as short as possible.

Connect the different ground systems at the lowest possible conductor impedance. This is obtained by keeping the conductor as short as possible and by using the greatest possible surface area.
The metal cabinets of the different devices are mounted on the cabinet rear plate using the lowest possible high frequency impedance. This avoids having different high-frequency voltages for the individual devices and avoids the risk of radio interference currents running in any connection cables used between the devices. The radio interference has been reduced.
To obtain a low high-frequency impedance, use the fastening bolts of the devices as high frequency connection to the rear plate. Remove any insulating paint or similar from the fastening points.

3.4.4 Extra Protection (RCD)

EN/IEC61800-5-1 (Power drive system product standard) requests special care if the leakage current exceeds 3.5 mA. Reinforce grounding in the following ways:

- Ground wire of at least 10 mm^2 (7 AWG).
- Install 2 separate ground wires, both complying with the dimensioning rules. See EN 60364-5-54 § 543.7 for further information.

If local safety regulations are complied with, ELCB relays, multiple protective earthing, or grounding can be used as extra protection.

A ground fault may cause a DC component to develop in the fault current.

If ELCB relays are used, observe local regulations. Relays must be suitable for the protection of 3-phase equipment with a bridge rectifier and for a brief discharge on power-up.

See also *Special Conditions* in the product relevant *design guide*.

3.4.5 RFI Switch

Mains supply isolated from ground
Turn off (OFF)[1] the RFI switch via *parameter 14-50 RFI Filter* on the frequency converter and *parameter 14-50 RFI Filter* on the filter if:

- The frequency converter is supplied from an isolated mains source (IT mains, floating delta, and grounded delta).
- The frequency converter is supplied from TT/TN-S mains with grounded leg.

[1] Not available for 525–600/690 V frequency converters.

For further reference, see IEC 364-3.
Set *parameter 14-50 RFI Filter* to *[1] ON* if:

- Optimum EMC performance is needed.
- Parallel motors are connected.
- The motor cable length is above 25 m (82 ft).

In OFF, the internal RFI capacities (filter capacitors) between the chassis and the DC link are cut off to avoid damage to the DC link and to reduce the ground capacity currents (according to IEC 61800-3).
Also refer to the application note *VLT on IT mains.* It is important to use isolation monitors which are compatible with power electronics (IEC 61557-8).

3.4.6 Torque

When tightening all connection of mains, it is important to tighten with the correct torque. Too low or too high torque results in a poor connection of mains. To ensure correct torque, use a torque wrench.

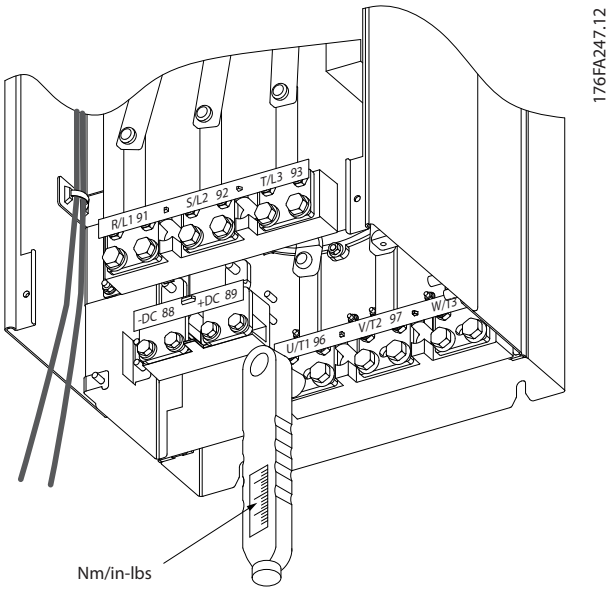

Illustration 3.44 Tightening Torques

Enclosure size	Terminal	Torque	Bolt size
F8–F15	Mains Motor	19–40 Nm (168–354 in-lb)	M10
	Brake Regen	8.5–20.5 Nm (75–181 in-lb)	M8

Table 3.11 Tightening Torques

3.4.7 Shielded Cables

NOTICE

Danfoss recommends using shielded cables between the LCL filter and the frequency converter. Unshielded cables can be used between the transformer and the LCL filter input side.

Make sure to connect shielded and armored cables properly to ensure high EMC immunity and low emissions.

The connection can be made using either cable glands or clamps.

- EMC cable glands: Available cable glands can be used to ensure optimum EMC connection.
- EMC cable clamp: Clamps allowing easy connection are supplied with the frequency converter.

3.4.8 Motor Cable

Connect the motor to terminals U/T1/96, V/T2/97, W/T3/98. Ground to terminal 99. All types of 3-phase asynchronous standard motors can be used with a frequency converter. The factory setting is for clockwise rotation with the frequency converter output connected as follows:

Terminal number	Function
96, 97, 98	Mains U/T1, V/T2, W/T3
99	Ground

Table 3.12 Motor Connection Terminals

- Terminal U/T1/96 connected to U-phase.
- Terminal V/T2/97 connected to V-phase.
- Terminal W/T3/98 connected to W-phase.

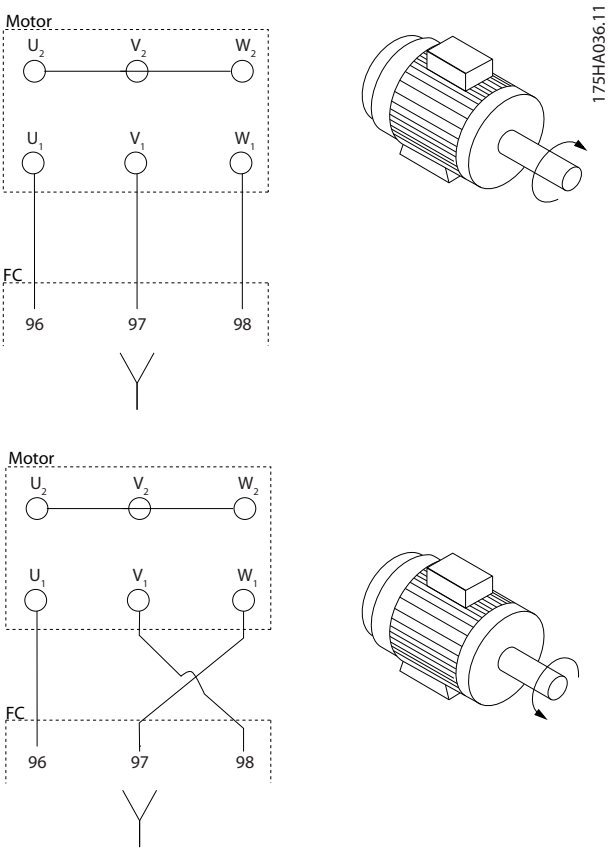

Illustration 3.45 Wiring for Clockwise and Counterclockwise Motor Rotation

The direction of rotation can be changed by switching 2 phases in the motor cable or by changing the setting of *parameter 4-10 Motor Speed Direction*.

A motor rotation check can be performed using *parameter 1-28 Motor Rotation Check* and following the steps shown on the display.

Requirements

F8/F9 requirements: The cables must be of equal length within 10% between the inverter module terminals and the first common point of a phase. The recommended common point is the motor terminals.

F10/F11 requirements: Motor phase cable quantities must be multiples of 2, resulting in 2, 4, 6, or 8 (1 cable is not allowed) to obtain equal number of wires attached to both inverter module terminals. The cables must be equal length within 10% between the inverter module terminals and the first common point of a phase. The recommended common point is the motor terminals.

F12/F13 requirements: Motor phase cable quantities must be multiples of 3, resulting in 3, 6, 9, or 12 (1, 2, or 3 cables are not allowed) to obtain an equal number of wires attached to each inverter module terminal. The wires must be of equal length within 10% between the inverter module terminals and the first common point of a phase. The recommended common point is the motor terminals.

F14/F15 requirements: Motor phase cable quantities must be multiples of 4, resulting in 4, 8, 12, or 16 (1, 2, or 3 cables are not allowed) to obtain an equal number of wires attached to each inverter module terminal. The wires must be of equal length within 10% between the inverter module terminals and the first common point of a phase. The recommended common point is the motor terminals.

Output junction box requirements: The length, minimum 2.500 mm (98.4 in), and quantity of cables must be equal from each inverter module to the common terminal in the junction box.

NOTICE

If a retrofit application requires an unequal number of wires per phase, consult Danfoss for requirements and documentation, or use the top/bottom entry side cabinet option.

3.4.9 Brake Cable for Frequency Converters with Factory-installed Brake Chopper Option

(Only standard with letter B in position 18 of product type code).

Use a shielded connection cable to the brake resistor. The maximum length from the frequency converter to the DC bar is limited to 25 m (82 ft).

Terminal number	Function
81, 82	Brake resistor terminals

Table 3.13 Brake Resistor Terminals

The connection cable to the brake resistor must be shielded. Connect the shield to the conductive backplate on the frequency converter and to the metal cabinet of the brake resistor with cable clamps.
Size the brake cable cross-section to match the brake torque. See also the instructions *Brake Resistor* and *Brake Resistors for Horizontal Applications* for further information regarding safe installation.

NOTICE

Depending on the supply voltage, voltages up to 1099 V DC can occur on the terminals.

F enclosure requirements

Connect the brake resistor to the brake terminals in each inverter module.

3.4.10 Shielding against Electrical Noise

Before mounting the mains power cable, mount the EMC metal cover to ensure best EMC performance.

NOTICE

The EMC metal cover is only included in frequency converters with an RFI filter.

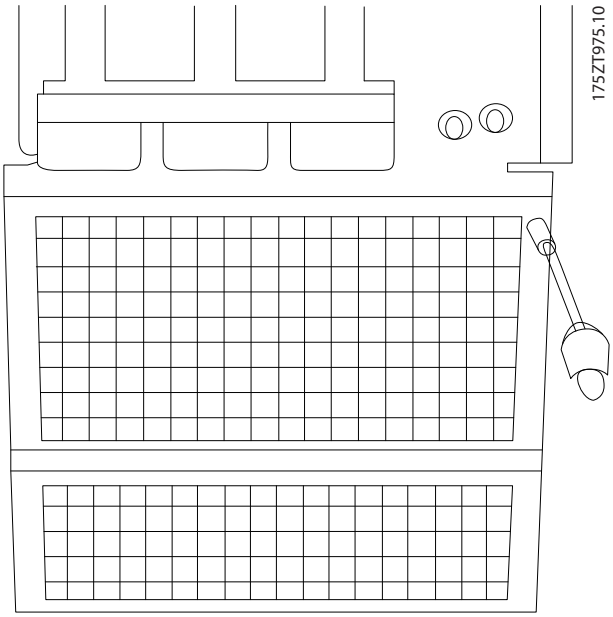

Illustration 3.46 Mounting of EMC shield

3.4.11 Connection of Mains

Mains and ground must be connected as detailed in *Table 3.14*.

Terminal number	Function
91-1, 92-1, 93-1	Mains R1/L1-1, S1/L2-1, T1/L3-1
91-2, 92-2, 93-2	Mains R2/L1-2, S2/L2-2, T2/L3-2
94	Ground

Table 3.14 Mains and Ground Connection Terminals

NOTICE

To ensure that the mains voltage of the frequency converter matches the supply of the plant, check the nameplate.

Ensure that the power supply can supply the necessary current to the frequency converter.

If the frequency converter is without built-in fuses, ensure that the external fuses have the correct current rating. See *chapter 3.4.13 Fuses*.

3.4.12 External Fan Supply

In case the frequency converter is supplied by DC, or if the fan must run independently of the power supply, an external power supply can be applied. The connection is made on the power card.

Terminal number	Function
100, 101	Auxiliary supply S, T
102, 103	Internal supply S, T

Table 3.15 External Fan Supply Terminals

The connector on the power card provides the connection of mains voltage for the cooling fans. The fans are connected from factory to be supplied from a common AC line (jumpers between 100–102 and 101–103). If an external supply is needed, remove the jumpers and connect the supply to terminals 100 and 101. Use a 5 A fuse for protection. UL applications require a LittleFuse KLK-5 or equivalent.

3.4.13 Fuses

⚠WARNING

SHORT-CIRCUIT AND OVERCURRENT

All frequency converters must have the mains fuses for the short circuit and overcurrent protection. If they are not included in the frequency converter, they must be installed during frequency converter installation. Operating frequency converters without having mains fuses can result in death or serious injury.

- **Install the mains fuses for the short circuit and overcurrent protection during the installation, if they are not included in the frequency converter.**

Branch circuit protection

To protect the installation against electrical and fire hazard, all branch circuits in an installation, switch gear, machines and so on, must be short-circuited and overcurrent protected according to national/international regulations.

Short-circuit protection

To avoid electrical or fire hazard, protect the frequency converter against short circuit. Danfoss recommends using the fuses mentioned in *Table 3.16* to *Table 3.27* to protect service personnel and equipment if there is an internal failure in the frequency converter. The frequency converter provides full short-circuit protection if there is a short circuit on the motor output.

Overcurrent protection

To avoid fire hazard due to overheating of the cables in the installation, provide overload protection. The frequency converter is equipped with an internal overcurrent protection, which can be used for upstream overload protection (UL applications excluded). See *parameter 4-18 Current Limit*. Moreover, fuses or circuit breakers can be used to provide the overcurrent protection in the installation. Overcurrent protection must always be carried out according to national regulations.

UL Compliance

The fuses listed in *Table 3.16* to *Table 3.27* are suitable for use on a circuit capable of delivering 100000 A_{rms} (symmetrical), 240 V (if applicable), 480 V, 500 V, or 600 V depending on the frequency converter voltage rating. With the proper fusing, the frequency converter short circuit current rating (SCCR) is 100000 A_{rms}.

When the circuit breaker is provided with the frequency converter, the circuit breaker's ampere interrupting current rating (AIC), which is usually lower than 100000 A_{rms}, determines the frequency converter SCCR.

Power size	Enclosure	Rating		Bussmann	Spare Bussmann	Estimated fuse power loss [W]	
FC 302	Type	[V] (UL)	[A]	P/N	P/N	400 V	460 V
P250T5	F8/F9	700	700	170M4017	176F8591	25	19
P315T5	F8/F9	700	700	170M4017	176F8591	30	22
P355T5	F8/F9	700	700	170M4017	176F8591	38	29
P400T5	F8/F9	700	700	170M4017	176F8591	3500	2800
P450T5	F10/F11	700	900	170M6013	176F8592	3940	4925
P500T5	F10/F11	700	900	170M6013	176F8592	2625	2100
P560T5	F10/F11	700	900	170M6013	176F8592	3940	4925
P630T5	F10/F11	700	1500	170M6018	176F8592	45	34
P710T5	F12/F13	700	1500	170M6018	176F9181	60	45
P800T5	F12/F13	700	1500	170M6018	176F9181	83	63

Table 3.16 Mains Fuses, 380–500 V

Power size	Enclosure	Rating		Bussmann	Spare Bussmann	Estimated fuse power loss [W]	
FC 302	Type	[V] (UL)	[A]	P/N	P/N	600 V	690 V
P355T7	F8/F9	700	630	170M4016	176F8335	13	10
P400T7	F8/F9	700	630	170M4016	176F8335	17	13
P500T7	F8/F9	700	630	170M4016	176F8335	22	16
P560T7	F8/F9	700	630	170M4016	176F8335	24	18
P630T7	F10/F11	700	900	170M6013	176F8592	26	20
P710T7	F10/F11	700	900	170M6013	176F8592	35	27
P800T7	F10/F11	700	900	170M6013	176F8592	44	33
P900T7	F12/F13	700	1500	170M6018	176F9181	26	20
P1M0T7	F12/F13	700	1500	170M6018	176F9181	37	28
P1M2T7	F12/F13	700	1500	170M6018	176F9181	47	36
P1M4T7	F14/F15	700	2000	170M7082	176F8769	25	25
P1M6T7	F14/F15	700	2000	170M7082	176F8769	25	29
P1M8T7	F14/F15	700	2000	170M7082	176F8769	25	29

Table 3.17 Mains Fuses, 525–690 V

Size/Type	Bussmann PN[1)]	Rating	Siba
P450	170M8611	1100 A, 1000 V	20 781 32.1000
P500	170M8611	1100 A, 1000 V	20 781 32.1000
P560	170M6467	1400 A, 700 V	20 681 32.1400
P630	170M6467	1400 A, 700 V	20 681 32.1400
P710	170M8611	1100 A, 1000 V	20 781 32.1000
P800	170M6467	1400 A, 700 V	20 681 32.1400

Table 3.18 Inverter Module DC-Link Fuses, 380–500 V

Size/Type	Bussmann PN[1)]	Rating	Siba
P630–P1M8	170M8611	1100 A, 1000 V	20 781 32. 1000

Table 3.19 Inverter Module DC-Link Fuses, 525–690 V

1) The Bussmann 170M fuses shown use the -/80 visual indicator, -TN/80 Type T, -/110 or TN/110. Type T indicator fuses of the same size and amperage may be substituted for external use.

3

3.4.14 Supplementary Fuses

	Size/type	Bussmann PN	Rating	Alternative fuses
2.5–4.0 A fuse	P450–P800, 380–500 V	LPJ-6 SP or SPI	6 A, 600 V	Any listed Class J Dual Element, Time Delay, 6 A
	P630–P1M8, 525–690 V	LPJ-10 SP or SPI	10 A, 600 V	Any listed Class J Dual Element, Time Delay, 10 A
4.0–6.3 A fuse	P450–P800, 380–500 V	LPJ-10 SP or SPI	10 A, 600 V	Any listed Class J Dual Element, Time Delay, 10 A
	P630–P1M8, 525–690 V	LPJ-15 SP or SPI	15 A, 600 V	Any listed Class J Dual Element, Time Delay, 15 A
6.3–10 A fuse	P450–P800, 380–500 V	LPJ-15 SP or SPI	15 A, 600 V	Any listed Class J Dual Element, Time Delay, 15 A
	P630–P1M8, 525–690 V	LPJ-20 SP or SPI	20 A, 600 V	Any listed Class J Dual Element, Time Delay, 20 A
10–16 A fuse	P450–P800, 380–500 V	LPJ-25 SP or SPI	25 A, 600 V	Any listed Class J Dual Element, Time Delay, 25 A
	P630–P1M8, 525–690 V	LPJ-20 SP or SPI	20 A, 600 V	Any listed Class J Dual Element, Time Delay, 20 A

Table 3.20 Manual Motor Controller Fuses

Enclosure size	Bussmann PN	Rating
F8–F15	KTK-4	4 A, 600 V

Table 3.21 SMPS Fuse

Size/type	Bussmann PN	LittelFuse	Rating
P315–P800, 380–500 V	–	KLK-15	15 A, 600 V
P500–P1M8, 525–690 V	–	KLK-15	15 A, 600 V

Table 3.22 Fan Fuses

Enclosure size	Bussmann PN	Rating	Alternative fuses
F8–F15	LPJ-30 SP or SPI	30 A, 600 V	Any listed Class J Dual Element, Time Delay, 30 A

Table 3.23 30 A Fuse Protected Terminal Fuse

Enclosure size	Bussmann PN	Rating	Alternative fuses
F8–F15	LPJ-6 SP or SPI	6 A, 600 V	Any listed Class J Dual Element, Time Delay, 6 A

Table 3.24 Control Transformer Fuse

Enclosure size	Bussmann PN	Rating
F8–F15	GMC-800MA	800 mA, 250 V

Table 3.25 NAMUR Fuse

Enclosure size	Bussmann PN	Rating	Alternative fuses
F8–F15	LP-CC-6	6 A, 600 V	Any listed Class CC, 6 A

Table 3.26 Safety Relay Coil Fuse with Pilz Relay

Enclosure size	Power	Type
380–500 V		
F9	P250	ABB OETL-NF600A
F9	P315	ABB OETL-NF600A
F9	P355	ABB OETL-NF600A
F9	P400	ABB OETL-NF600A
F11	P450	ABB OETL-NF800A
F11	P500	ABB OETL-NF800A
F11	P560	ABB OETL-NF800A
F11	P630	ABB OT800U21
F13	P710	Merlin Gerin NPJF36000S12AAYP
F13	P800	Merlin Gerin NPJF36000S12AAYP
525–690 V		
F9	P355–P560	ABB OT400U12-121
F11	P630–P710	ABB OETL-NF600A
F11	P800	ABB OT800U21
F13	P900	ABB OT800U21
F13	P1M0–P1M2	Merlin Gerin NPJF36000S12AAYP
F15	P1M4–P1M8	Merlin Gerin NPJF362000S20AAYP

Table 3.27 Mains Disconnectors

3.4.15 Motor Insulation

For motor cable lengths ≤ the maximum cable length listed in *chapter 5.4 Cable Specifications*, the motor insulation ratings in *Table 3.28* are recommended. Peak voltage can be up to twice the DC-link voltage, and 2.8 times the mains voltage, due to transmission line effects in the motor cable. If a motor has lower insulation rating, use a dU/dt or sine-wave filter.

Nominal mains voltage [V]	Motor insulation [V]
U_N ≤420	Standard U_{LL}=1300
420<U_N≤500	Reinforced U_{LL}=1600
500<U_N≤600	Reinforced U_{LL}=1800
600<U_N≤ 690	Reinforced U_{LL}=2000

Table 3.28 Motor Insulation Ratings

3.4.16 Motor Bearing Currents

All motors installed with VLT® AutomationDrive FC 302 frequency converters with a power rating of 250 kW or higher must have NDE (Non-Drive End) insulated bearings installed to eliminate circulating bearing currents. To minimize DE (Drive End) bearing and shaft currents, ensure that the frequency converter, motor, driven machine, and motor to the driven machine are grounded properly.

Standard mitigation strategies:

1. Use an insulated bearing.
2. Apply rigorous installation procedures.
   - 2a Ensure that the motor and load motor are aligned.
   - 2b Strictly follow the EMC installation guideline.
   - 2c Reinforce the PE so the high frequency impedance is lower in the PE than the input power leads.
   - 2d Provide a good high frequency connection between the motor and the frequency converter, for example by using shielded cable which has a 360° connection in the motor and the frequency converter.
   - 2e Make sure that the impedance from the frequency converter to the building ground is lower than the grounding impedance of the machine.
   - 2f Make a direct ground connection between the motor and load motor.
3. Lower the IGBT switching frequency.
4. Modify the inverter waveform, 60° AVM vs. SFAVM.
5. Install a shaft grounding system or use an isolating coupling.
6. Apply conductive lubrication.
7. Use minimum speed settings where possible.
8. Ensure that the mains voltage is balanced to ground.
9. Use a dU/dt or sine-wave filter.

3.4.17 Brake Resistor Temperature Switch

- Torque: 0.5–0.6 Nm (5 in-lb)
- Screw size: M3

This input can be used to monitor the temperature of an externally connected brake resistor. If the input between 104 and 106 is established, the frequency converter trips on warning/alarm 27 *Brake IGBT*. If the connection is closed between 104 and 105, the frequency converter trips on warning/alarm 27 *Brake IGBT*.
Install a KLIXON switch that is normally closed. If this function is not used, short circuit 106 and 104 together.

- Normally closed: 104–106 (factory installed jumper)
- Normally open: 104–105

Terminal number	Function
106, 104, 105	Brake resistor temperature switch.

Table 3.29 Brake Resistor Temperature Switch Terminals

⚠CAUTION

MOTOR COASTING

If the temperature of the brake resistor gets too high and the thermal switch drops out, the frequency converter stops braking and the motor starts coasting.

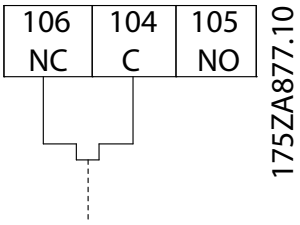

Illustration 3.47 Brake Resistor Temperature Switch

3

3.4.18 Control Cable Routing

Tie all control wires down to the designated control cable routing. Remember to connect the shields in a proper way to ensure optimum electrical immunity.

Fieldbus connection
Connections are made to the relevant options on the control card. For details, see the relevant fieldbus instruction. Place the cable in the provided path inside the frequency converter and tie it down with other control wires.

Installation of 24 V DC external supply

- Torque: 0.5–0.6 Nm (5 in-lb)
- Screw size: M3

Terminal number	Function
35 (-), 36 (+)	24 V DC external supply

Table 3.30 Terminals for 24 V DC external supply

24 V DC external supply can be used as low voltage supply to the control card and any option cards installed. This enables full operation of the LCP (including parameter setting) without connection to the mains. A warning of low voltage is given when 24 V DC has been connected; however, there is no tripping.

NOTICE

To ensure correct galvanic isolation (type PELV) on the control terminals of the frequency converter, use 24 V DC PELV supply.

3.4.19 Access to Control Terminals

All terminals to the control cables are located beneath the LCP. They are accessed by opening the door of the IP21/IP54 unit, or by removing the covers of the IP00 unit.

3.4.20 Wiring to Control Terminals

Control terminal connectors can be unplugged from the frequency converter for ease of installation, as shown in *Illustration 3.48*.

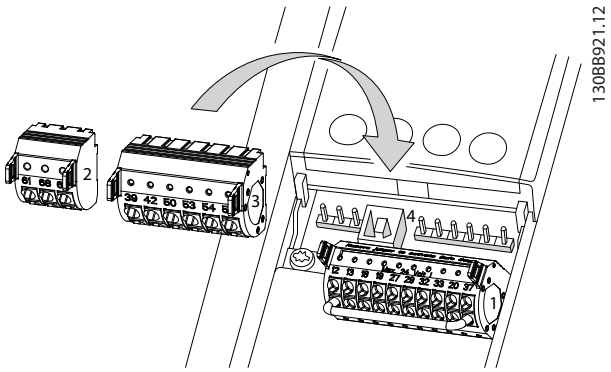

Illustration 3.48 Unplugging Control Terminals

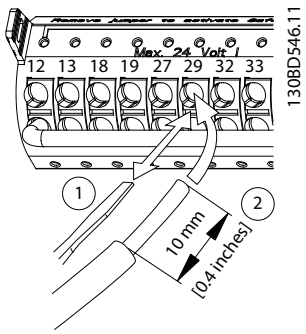

Illustration 3.49 Connecting Control Wires

NOTICE

To minimize interference, keep control wires as short as possible and separate from high-power cables.

1. Open the contact by inserting a small screwdriver into the slot above the contact and push the screwdriver slightly upwards.
2. Insert the bare control wire into the contact.
3. To fasten the control wire into the contact, remove the screwdriver.
4. Ensure that the contact is firmly established and not loose. Loose control wiring can be the source of equipment faults or reduced performance.

See *chapter 5.4 Cable Specifications* for control terminal wiring sizes and *chapter 3.5 Connection Examples* for typical control wiring connections.

3.4.21 Electrical Installation, Control Cables

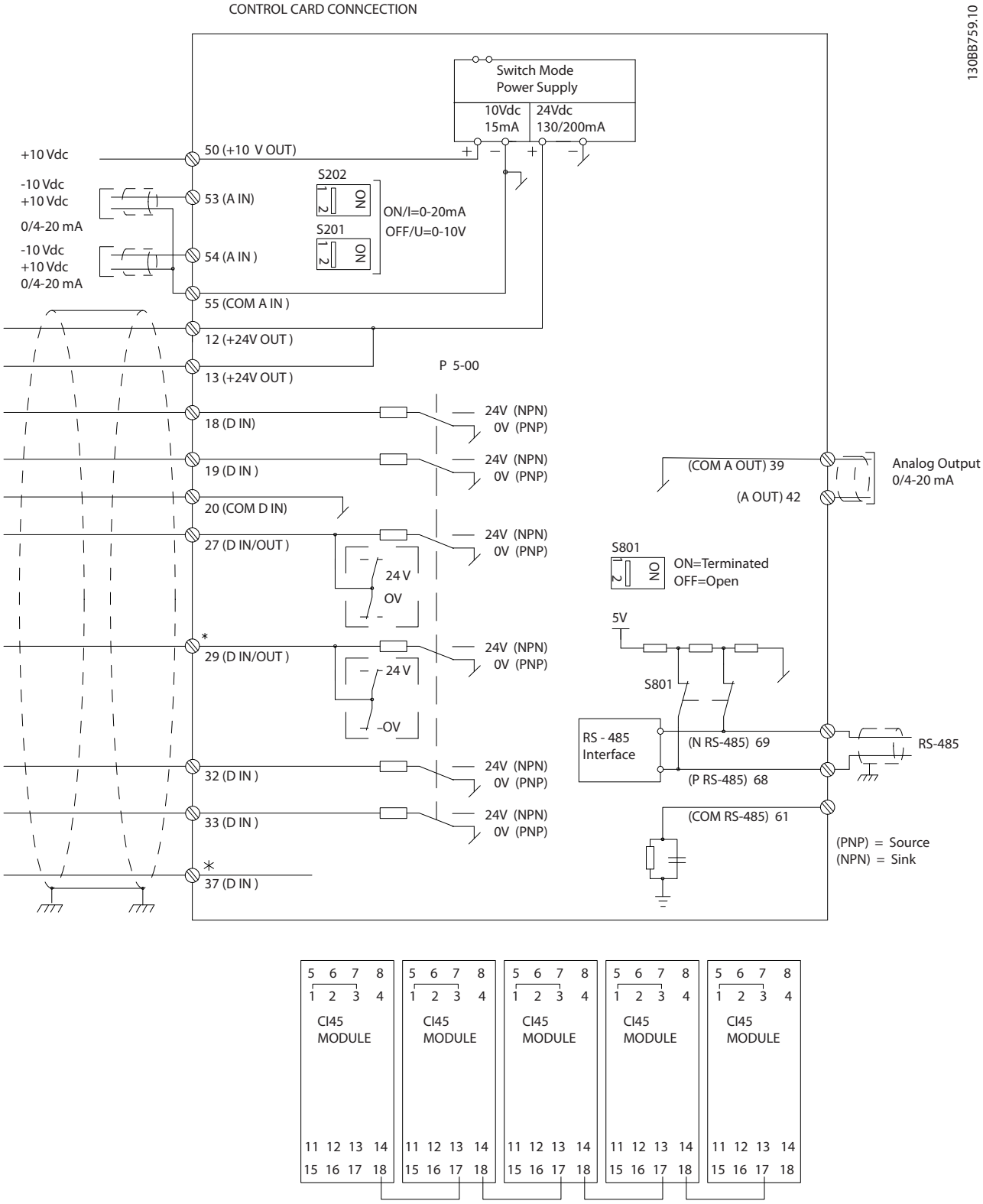

Illustration 3.50 Wiring Diagram

A=Analog, D=Digital

3

*Terminal 37 (optional) is used for Safe Torque Off. For Safe Torque Off installation instructions, refer to the *VLT® Frequency Converters Safe Torque Off Operating Instructions*.

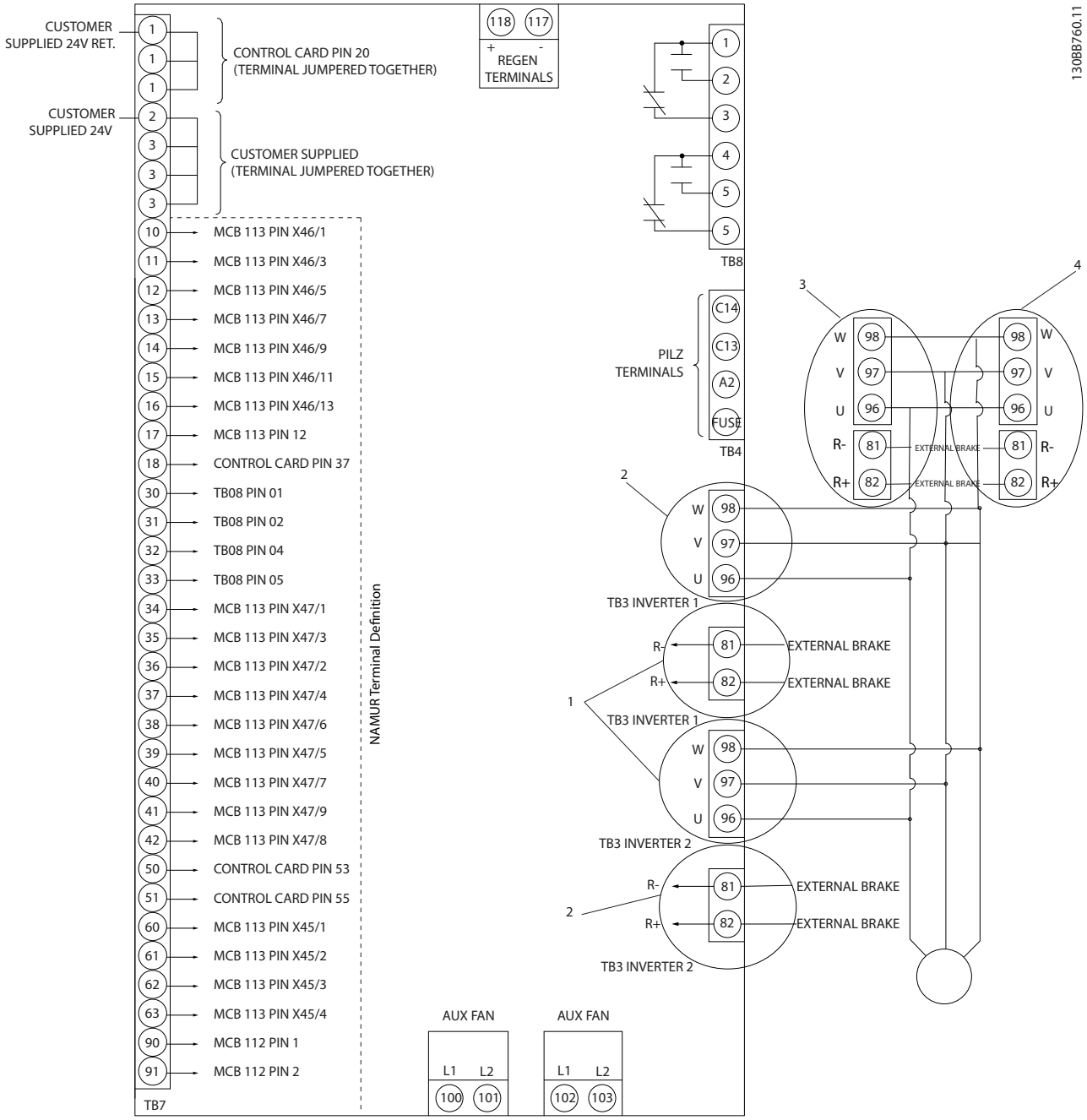

Illustration 3.51 Diagram Showing all Electrical Terminals with NAMUR Option

In rare cases and depending on the installation, long control cables and analog signals can result in 50/60 Hz ground loops due to noise from mains supply cables.

If ground loops occur, it may be necessary to break the shield or insert a 100 nF capacitor between the shield and the chassis.

To avoid ground currents from both groups affecting other groups, connect the digital and analog inputs and outputs separately to the frequency converter common inputs (terminal 20, 55, 39). For example, switching on the digital input can disturb the analog input signal.

Input polarity of control terminals

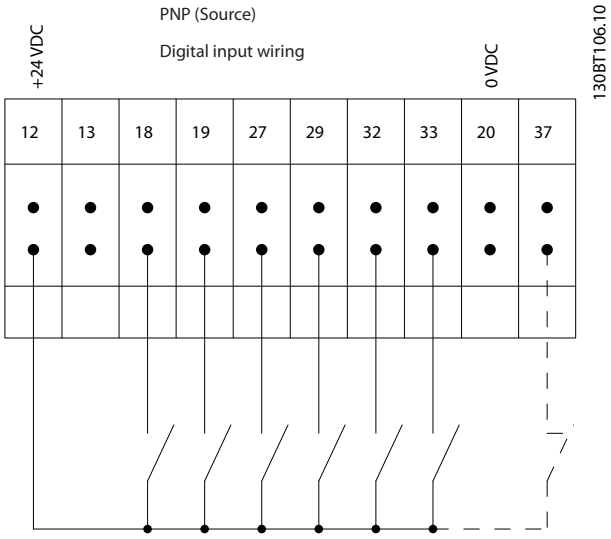

Illustration 3.52 PNP (Source)

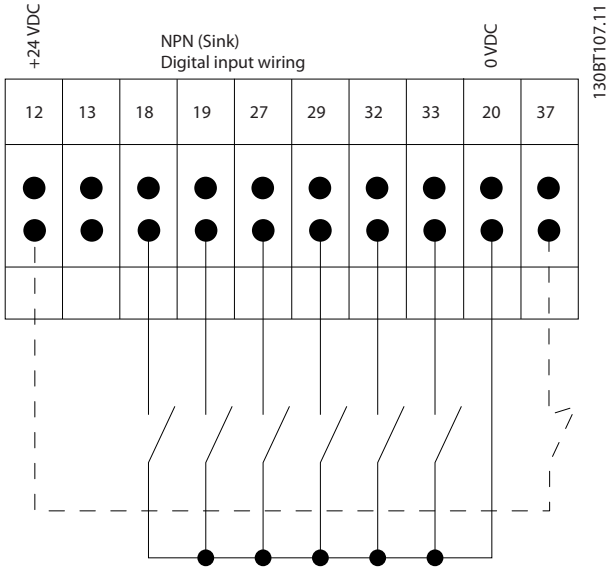

Illustration 3.53 NPN (Sink)

NOTICE

Control cables must be shielded/armored.

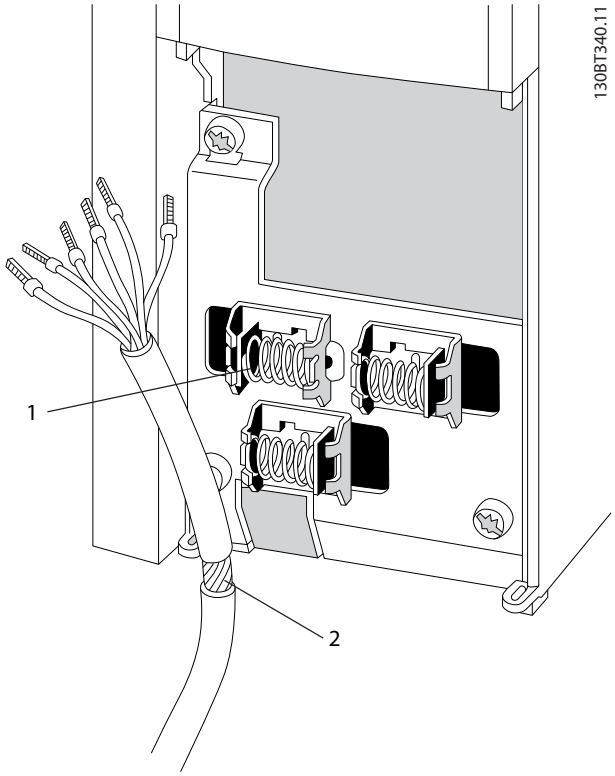

1	Shielding clamps
2	Removed shielding

Illustration 3.54 Grounding of Shielded/Armored Control Cables

Remember to connect the shields in a proper way to ensure optimum electrical immunity.

3.4.22 Switches S201, S202, and S801

Use switches S201 (A53) and S202 (A54) to configure the analog input terminals 53 and 54 as a current (0–20 mA) or a voltage (-10 V to +10 V).

Enable termination on the RS485 port (terminals 68 and 69) via the switch S801 (BUS TER).

See *Illustration 3.50*.

Default setting:

S201 (A53) = OFF (voltage input)

S202 (A54) = OFF (voltage input)

S801 (Bus termination) = OFF

3

NOTICE

When changing the function of S201, S202, or S801, do not to use force during the switch over. Remove the LCP fixture (cradle) when operating the switches. Do not operate the switches when the frequency converter is powered.

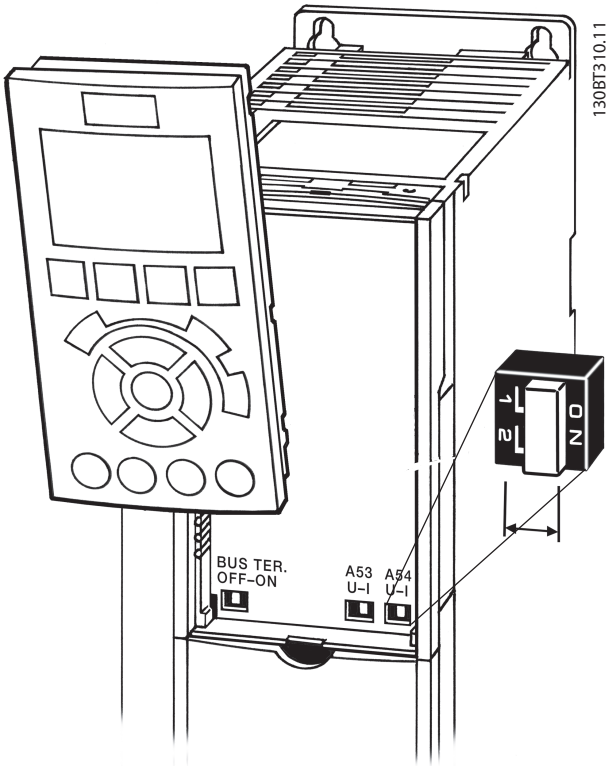

Illustration 3.55 Switch Location

3.5 Connection Examples

3.5.1 Start/Stop

Terminal 18 = *Parameter 5-10 Terminal 18 Digital Input [8] Start*
Terminal 27 = *Parameter 5-12 Terminal 27 Digital Input [0] No operation* (Default *coast inverse*)
Terminal 37 = STO

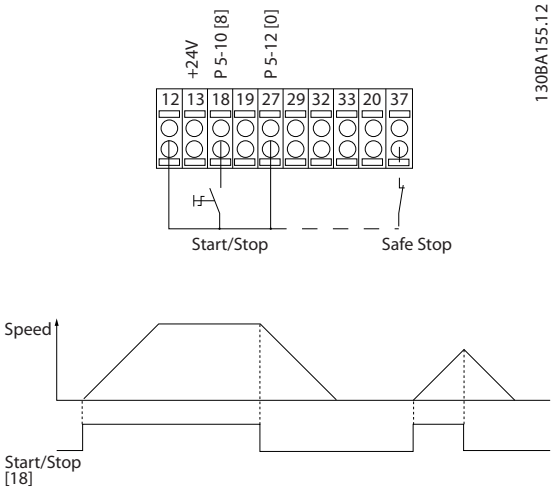

Illustration 3.56 Wiring Start/Stop

3.5.2 Pulse Start/Stop

Terminal 18 = *Parameter 5-10 Terminal 18 Digital Input [9] Latched start*
Terminal 27= *Parameter 5-12 Terminal 27 Digital Input [6] Stop inverse*
Terminal 37 = STO

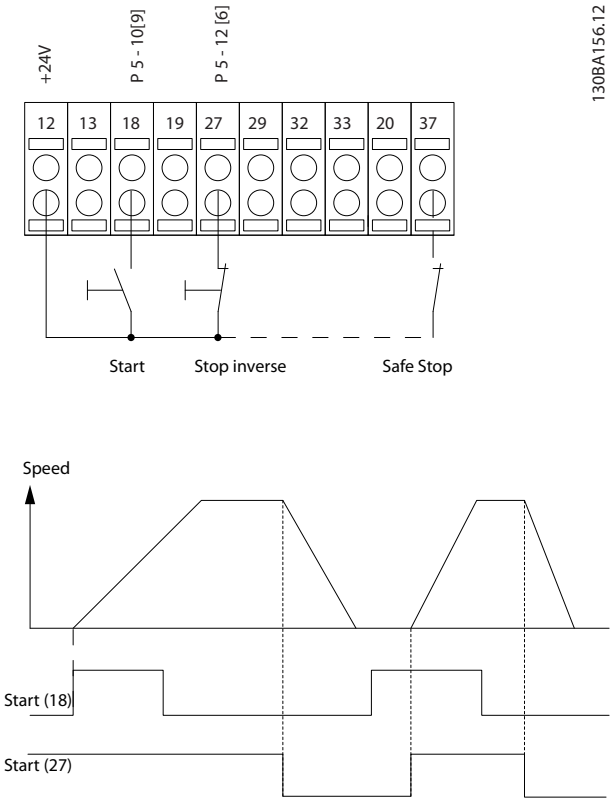

Illustration 3.57 Wiring Pulse Start/Stop

3.5.3 Speed up/Speed down

Terminals 29/32 = Speed up/Speed down

Terminal 18 = *Parameter 5-10 Terminal 18 Digital Input [9] Start* (default).

Terminal 27 = *Parameter 5-12 Terminal 27 Digital Input [19] Freeze reference*.

Terminal 29 = *Parameter 5-13 Terminal 29 Digital Input [21] Speed up*.

Terminal 32 = *Parameter 5-14 Terminal 32 Digital Input [22] Speed down*.

NOTICE

Terminal 29 only in FC x02 (x=series type).

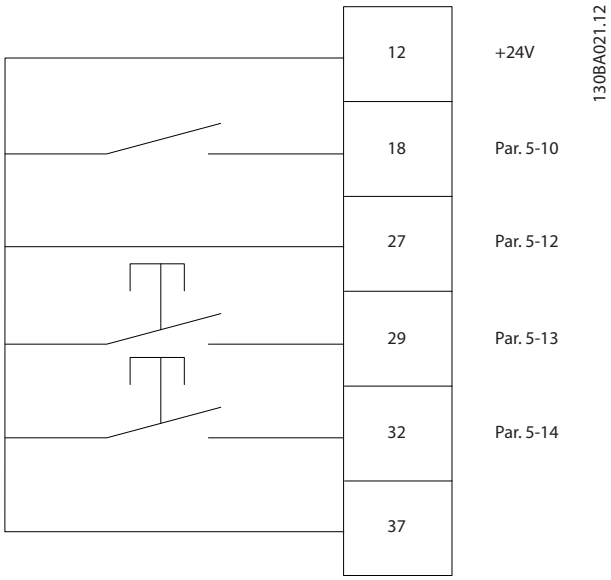

Illustration 3.58 Speed up/Speed down

3.5.4 Potentiometer Reference

Voltage reference via a potentiometer

Reference source 1 = *[1] Analog input 53* (default).

Terminal 53, low voltage = 0 V.

Terminal 53, high voltage = 10 V.

Terminal 53, low reference/feedback = 0 RPM.

Terminal 53, high reference/feedback = 1500 RPM.

Switch S201 = OFF (U)

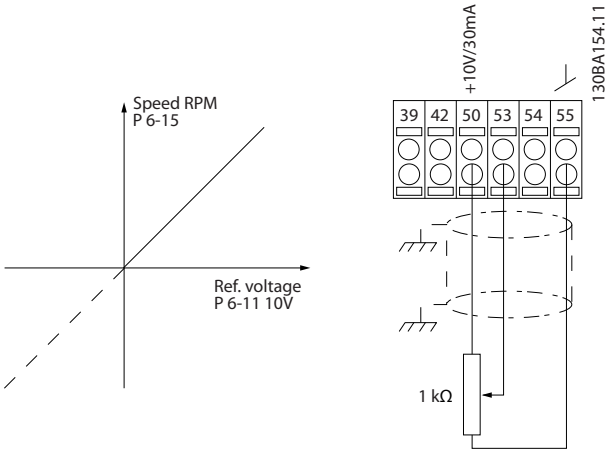

Illustration 3.59 Potentiometer Reference

3.6 Final Set-up and Test

To test the set-up and to ensure that the frequency converter is running, follow these steps.

Step 1. Locate the motor nameplate.

NOTICE

The motor is either star (Y) or delta connected (Δ). This information is on the motor nameplate.

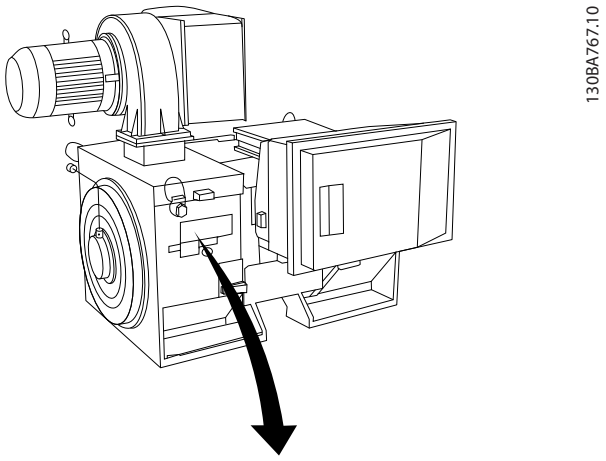

THREE PHASE INDUCTION MOTOR

MOD MCV 315E	Nr. 135189 12 04				IL/IN 6.5	
kW 400	PRIMARY				SF 1.15	
HP 536	V 690	A 410.6	CONN Y		COS f 0.85	40
mm 1481	V	A	CONN		AMB 40	°C
Hz 50	V	A	CONN		ALT 1000	m
DESIGNN	SECONDARY				RISE 80	°C
DUTY S1	V	A	CONN		ENCLOSURE IP23	
INSUL I	EFFICIENCY %	95.8%	100%	95.8%	75%	WEIGHT 1.83 ton

⚠ CAUTION

Illustration 3.60 Nameplate

3

Step 2. Enter the motor nameplate data in this parameter list.

To access this list, press [Quick Menu] then select *Q2 Quick Setup*.

1. *Parameter 1-20 Motor Power [kW]*
   Parameter 1-21 Motor Power [HP]
2. *Parameter 1-22 Motor Voltage*
3. *Parameter 1-23 Motor Frequency*
4. *Parameter 1-24 Motor Current*
5. *Parameter 1-25 Motor Nominal Speed*

Step 3. Activate the Automatic Motor Adaptation (AMA).

Performing an AMA ensures optimum performance. The AMA measures the values from the motor model equivalent diagram.

1. Connect terminal 37 to terminal 12 (if terminal 37 is available).
2. Connect terminal 27 to terminal 12 or set *parameter 5-12 Terminal 27 Digital Input* to *[0] No function*.
3. Activate the AMA *parameter 1-29 Automatic Motor Adaptation (AMA)*.
4. Select between complete or reduced AMA. If a sine-wave filter is mounted, run only the reduced AMA, or remove the sine-wave filter during the AMA procedure.
5. Press [OK]. The display shows *Press [Hand On] to start*.
6. Press [Hand On]. A progress bar indicates if the AMA is in progress.

Stop the AMA during operation

1. Press [Off]. The frequency converter enters into alarm mode, and the display shows that the user terminated the AMA.

Successful AMA

1. The display shows *Press [OK] to finish AMA*.
2. To exit the AMA state, press [OK].

Unsuccessful AMA

1. The frequency converter enters into alarm mode. A description of the alarm can be found in *chapter 6 Warnings and Alarms*.
2. *Report Value* in the [Alarm Log] shows the last measuring sequence carried out by the AMA, before the frequency converter entered alarm mode. This number along with the description of the alarm helps with troubleshooting. State the alarm number and description when contacting Danfoss service.

NOTICE

Incorrectly registered motor nameplate data, or a too significant difference between the motor power size and the frequency converter power size often causes unsuccessful AMA.

Step 4. Set the speed limit and ramp time.

- *Parameter 3-02 Minimum Reference*
- *Parameter 3-03 Maximum Reference*

Step 5. Set up the desired limits for speed and ramp time.

- *Parameter 4-11 Motor Speed Low Limit [RPM]* or *parameter 4-12 Motor Speed Low Limit [Hz]*
- *Parameter 4-13 Motor Speed High Limit [RPM]* or *parameter 4-14 Motor Speed High Limit [Hz]*
- *Parameter 3-41 Ramp 1 Ramp Up Time*
- *Parameter 3-42 Ramp 1 Ramp Down Time*

3.7 Additional Connections

3.7.1 Mechanical Brake Control

In hoisting/lowering applications, it is necessary to be able to control an electro-mechanical brake:

- Control the brake using any relay output or digital output (terminal 27 or 29).
- Keep the output closed (voltage-free) as long as the frequency converter is unable to support the motor, for example due to the load being too heavy.
- Select *[32] Mechanical brake control* in *parameter group 5-4* Relays* for applications with an electro-mechanical brake.
- The brake is released when the motor current exceeds the preset value in *parameter 2-20 Release Brake Current*.
- The brake is engaged when the output frequency is less than the frequency set in *parameter 2-21 Activate Brake Speed [RPM]* or *parameter 2-22 Activate Brake Speed [Hz]*, and only if the frequency converter carries out a stop command.

If the frequency converter is in alarm mode or in an overvoltage situation, the mechanical brake immediately cuts in.

3.7.2 Parallel Connection of Motors

The frequency converter can control several parallel-connected motors. The total current consumption of the motors must not exceed the rated output current $I_{M,N}$ for the frequency converter.

NOTICE

Installations with cables connected in a common joint as in *Illustration 3.61* are only recommended for short cable lengths.

NOTICE

When motors are connected in parallel, *parameter 1-29 Automatic Motor Adaptation (AMA)* cannot be used.

NOTICE

The electronic thermal relay (ETR) of the frequency converter cannot be used as motor overload protection for the individual motor in systems with parallel-connected motors. Provide further motor overload protection, for example thermistors in each motor or individual thermal relays (circuit breakers are not suitable as protection).

Problems can occur at start-up and at low RPM values if motor sizes are widely different because relatively high ohmic resistance in the stator of small motors calls for a higher voltage at start-up and at low RPM values.

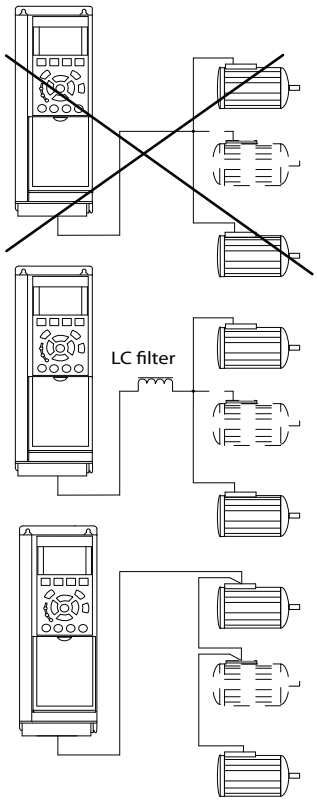

Illustration 3.61 Parallel Motor Connection

3.7.3 Motor Thermal Protection

The electronic thermal relay (ETR) provides the overload protection. When the current is high, the ETR activates the trip function. The trip response time varies with the current magnitude inversely. The overload trip function provides the Class 20 motor overload protection.

The electronic thermal relay in the frequency converter has received UL Approval for single motor overload protection, when *parameter 1-90 Motor Thermal Protection* is set to *[4] ETR Trip* and *parameter 1-24 Motor Current* is set to the rated motor current (see motor nameplate).
For motor thermal protection, it is also possible to use the VLT® PTC Thermistor Card MCB 112 option. This card provides ATEX certificate to protect motors in explosion hazardous areas, Zone 1/21, and Zone 2/22. When *parameter 1-90 Motor Thermal Protection* is set to *[20] ATEX ETR* and is combined with the use of MCB 112, it is possible to control an Ex-e motor in explosion hazardous areas. Consult the relevant *programming guide* for details on how to set up the frequency converter for safe operation of Ex-e motors.

4 How to Programme

4.1 The Graphical LCP

The LCP is divided into 4 functional groups:

1. Graphical display with status lines.
2. Menu keys and indicator lights - changing parameters and switching between display functions.
3. Navigation keys and indicator lights.
4. Operation keys and indicator lights.

The LCP display can show up to 5 items of operating data while showing *Status*.

Display lines:

a. **Status line:** Status messages showing icons and graphics.

b. **Line 1–2:** Operator data lines showing data defined or selected. Add up to 1 extra line by pressing [Status].

c. **Status line:** Status messages showing text.

NOTICE

If start-up is delayed, the LCP shows the INITIALIZING message until it is ready. Adding or removing options can delay the start-up.

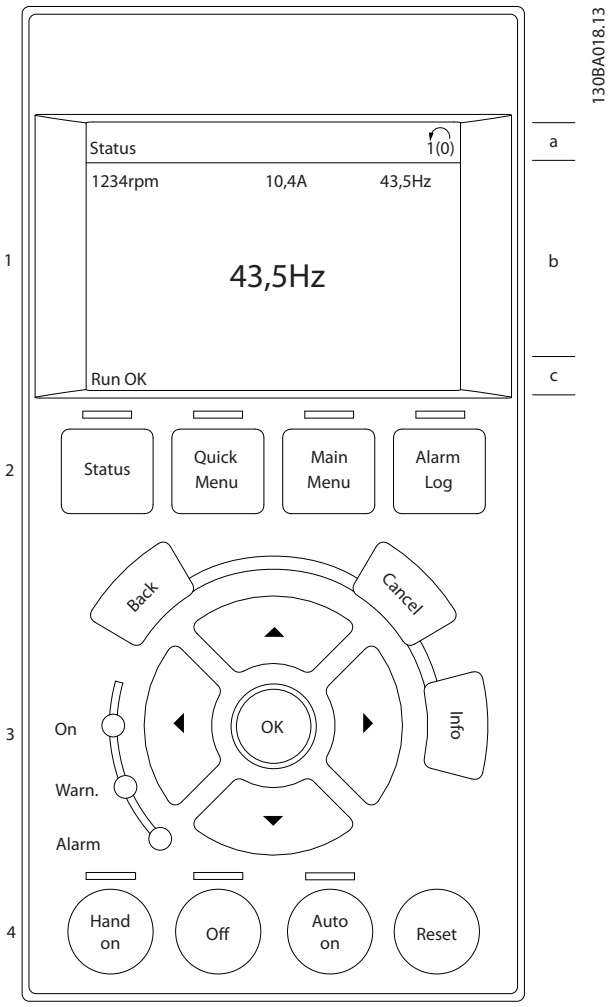

Illustration 4.1 LCP

4.1.1 Initial Commissioning

The easiest way of carrying out the initial commissioning is by pressing [Quick Menu] and following the quick set-up procedure using LCP 102 (read *Table 4.1* from left to right). The example applies to open-loop applications.

Press				
Quick Menu	↓	Q2 Quick Menu.	OK	↓
Parameter 0-01 LanguageParameter 0-01 Language	OK	Set language.	↓	
Parameter 1-20 Motor Power [kW]	OK	Set motor nameplate power.	↓	
Parameter 1-22 Motor Voltage	OK	Set nameplate voltage.	↓	
Parameter 1-23 Motor Frequency	OK	Set nameplate frequency.	↓	
Parameter 1-24 Motor Current	OK	Set nameplate current.	↓	
Parameter 1-25 Motor Nominal Speed	OK	Set nameplate speed in RPM.	↓	
Parameter 5-12 Terminal 27 Digital Input	OK	If terminal default is *[2] Coast inverse*, it is possible to change this setting to *[0] No function*. No connection to terminal 27 is then needed for running AMA.	↓	
Parameter 1-29 Automatic Motor Adaptation (AMA)	OK	Set desired AMA function. Enable complete AMA is recommended.	↓	
Parameter 3-02 Minimum Reference	OK	Set the minimum speed of the motor shaft.	↓	
Parameter 3-03 Maximum Reference	OK	Set the maximum speed of the motor shaft.	↓	
Parameter 3-41 Ramp 1 Ramp Up Time	OK	Set the ramp-up time with reference to synchronous motor speed, n_s.	↓ ↓	
Parameter 3-42 Ramp 1 Ramp Down Time	OK	Set the ramp-down time with reference to synchronous motor speed, n_s.	↓	
Parameter 3-13 Reference Site	OK	Set the site from where the reference must work.	↓	

Table 4.1 Quick Set-up Procedure

Another easy way of commissioning the frequency converter is by using the smart application set-up (SAS), which can also be found by pressing [Quick Menu]. To set up the applications listed, follow the instructions on the successive screens.

The [Info] key can be used throughout the SAS to see help information for various selections, settings, and messages. The following 3 applications are included:

- Mechanical brake.
- Conveyor.
- Pump/fan.

The following 4 fieldbusses can be selected:

- PROFIBUS.
- PROFINET.
- DeviceNet.
- EtherNet/IP.

NOTICE

The frequency converter ignores the start conditions when SAS is active.

NOTICE

The smart set-up runs automatically on the first power-up of the frequency converter or after a reset to factory settings. If no action is taken, the SAS screen automatically disappears after 10 minutes.

4.2 Quick Set-up

0-01 Language		
Option:		**Function:**
		Defines display language. The frequency converter is delivered with 4 different language packages. English and German are included in all packages. English cannot be erased or manipulated.
[0] *	English	Part of language packages 1–4
[1]	Deutsch	Part of language packages 1–4
[2]	Francais	Part of language package 1
[3]	Dansk	Part of language package 1
[4]	Spanish	Part of language package 1
[5]	Italiano	Part of language package 1
[6]	Svenska	Part of language package 1
[7]	Nederlands	Part of language package 1
[10]	Chinese	Part of language package 2
[20]	Suomi	Part of language package 1
[22]	English US	Part of language package 4
[27]	Greek	Part of language package 4
[28]	Bras.port	Part of language package 4
[36]	Slovenian	Part of language package 3
[39]	Korean	Part of language package 2
[40]	Japanese	Part of language package 2
[41]	Turkish	Part of language package 4
[42]	Trad.Chinese	Part of language package 2
[43]	Bulgarian	Part of language package 3
[44]	Srpski	Part of language package 3
[45]	Romanian	Part of language package 3
[46]	Magyar	Part of language package 3
[47]	Czech	Part of language package 3
[48]	Polski	Part of language package 4
[49]	Russian	Part of language package 3
[50]	Thai	Part of language package 2
[51]	Bahasa Indonesia	Part of language package 2
[52]	Hrvatski	Part of language package 3

1-20 Motor Power [kW]		
Range:		**Function:**
Size related*	[0.09 - 3000.00 kW]	**NOTICE** **This parameter cannot be adjusted while the motor is running.** Enter the nominal motor power in kW according to the motor nameplate data. The default value corresponds to the nominal rated output of the frequency converter. This parameter is visible in the LCP if *parameter 0-03 Regional Settings* is set to *[0] International*.

1-22 Motor Voltage		
Range:		**Function:**
Size related*	[10 - 1000 V]	Enter the nominal motor voltage according to the motor nameplate data. The default value corresponds to the nominal rated output of the frequency converter.

1-23 Motor Frequency		
Range:		**Function:**
Size related*	[20 - 1000 Hz]	***NOTICE*** **From software version 6.72 onwards, the output frequency of the frequency converter is limited to 590 Hz.** Select the motor frequency value from the motor nameplate data. If a value other than 50 Hz or 60 Hz is selected, adapt the load-independent settings in *parameter 1-50 Motor Magnetisation at Zero Speed* to *parameter 1-53 Model Shift Frequency*. For 87 Hz operation with 230/400 V motors, set the nameplate data for 230 V/50 Hz. To run at 87 Hz, adapt *parameter 4-13 Motor Speed High Limit [RPM]* and *parameter 3-03 Maximum Reference*.

1-24 Motor Current		
Range:		**Function:**
Size related*	[0.10 - 10000.00 A]	***NOTICE*** **This parameter cannot be adjusted while the motor is running.** Enter the nominal motor current value from the motor nameplate data. The data is used for calculating motor torque, motor thermal protection, and so on.

1-25 Motor Nominal Speed		
Range:		**Function:**
Size related*	[100 - 60000 RPM]	***NOTICE*** **This parameter cannot be adjusted while the motor is running.** Enter the nominal motor speed value from the motor nameplate data. The data is used for calculating automatic motor compensations.

1-29 Automatic Motor Adaptation (AMA)		
Option:		**Function:**
		NOTICE **This parameter cannot be adjusted while the motor is running.** The AMA function optimizes dynamic motor performance by automatically optimizing the advanced motor parameters (*parameter 1-30 Stator Resistance (Rs)* to *parameter 1-35 Main Reactance (Xh)*) at motor standstill. Activate the AMA function by pressing [Hand on] after selecting *[1] Enable complete AMA* or *[2] Enable reduced AMA*. See also *chapter 3.6.1 Final Set-up and Test*. After a normal sequence, the display reads: "Press [OK] to finish AMA". After pressing [OK], the frequency converter is ready for operation.
[0] *	OFF	
[1]	Enable complete AMA	Performs AMA of the stator resistance R_s, the rotor resistance R_r, the stator leakage reactance X_1, the rotor leakage reactance X_2 and the main reactance X_h.
[2]	Enable reduced AMA	Performs a reduced AMA of the stator resistance R_s in the system only. Select this option if an LC filter is used between the frequency converter and the motor.

NOTICE

- **For the best adaptation of the frequency converter, run AMA on a cold motor.**
- **AMA cannot be performed while the motor is running.**
- **AMA cannot be performed on permanent magnet motors.**

NOTICE

It is important to set *parameter group 1-2* Motor Data* correctly, since these form part of the AMA algorithm. An AMA must be performed to achieve optimum dynamic motor performance. It may take up to 10 minutes, depending on the power rating of the motor.

NOTICE

Avoid generating external torque during AMA.

NOTICE

If 1 of the settings in *parameter group 1-2* Motor Data* is changed, *parameter 1-30 Stator Resistance (Rs)* to *parameter 1-39 Motor Poles* return to their default setting.

4

3-02 Minimum Reference

Range:		Function:
Size related*	[-999999.999 - par. 3-03 ReferenceFeedbackUnit]	Enter the minimum reference. The minimum reference is the lowest value obtainable by summing all references. Minimum reference is active only when *parameter 3-00 Reference Range* is set to *[0] Min.- Max*. The minimum reference unit matches: • The configuration of *parameter 1-00 Configuration Mode*: for *[1] Speed closed loop*, RPM; for *[2] Torque*, Nm. • The unit selected in *parameter 3-01 Reference/ Feedback Unit*. If option *[10] Synchronization* is selected in *parameter 1-00 Configuration Mode*, this parameter defines the maximum speed deviation when performing the position offset defined in *parameter 3-26 Master Offset*.

3-03 Maximum Reference

Range:		Function:
Size related*	[par. 3-02 - 999999.999 ReferenceFeedbackUnit]	Enter the maximum reference. The maximum reference is the highest value obtainable by summing all references. The maximum reference unit matches: • The configuration selected in *parameter 1-00 Configuration Mode*: For *[1] Speed closed loop*, RPM; for *[2] Torque*, Nm. • The unit selected in *parameter 3-00 Reference Range*. If *[9] Positioning* is selected in *parameter 1-00 Configuration Mode*, this parameter defines the default speed for positioning.

3-41 Ramp 1 Ramp Up Time

Range:		Function:
Size related*	[0.01 - 3600 s]	Enter the ramp-up time, that is, the acceleration time from 0 RPM to the synchronous motor speed n_S. Select a ramp-up time which prevents the output current from exceeding the current limit in

3-41 Ramp 1 Ramp Up Time

Range:		Function:
		parameter 4-18 Current Limit during ramping. The value 0.00 corresponds to 0.01 s in speed mode. See ramp-down time in *parameter 3-42 Ramp 1 Ramp Down Time*. $Par.\ 3-41 = \frac{t_{acc}\,[s]\ x\ n_s\,[RPM]}{ref\ [RPM]}$

3-42 Ramp 1 Ramp Down Time

Range:		Function:
Size related*	[0.01 - 3600 s]	Enter the ramp-down time, that is, the deceleration time from the synchronous motor speed n_s to 0 RPM. Select a ramp-down time such that no overvoltage occurs in the inverter due to regenerative operation of the motor, and such that the generated current does not exceed the current limit set in *parameter 4-18 Current Limit*. The value 0.00 corresponds to 0.01 s in speed mode. See ramp-up time in *parameter 3-41 Ramp 1 Ramp Up Time*. $Par.\ 3-42 = \frac{t_{dec}\,[s]\ x\ n_s\,[RPM]}{ref\ [RPM]}$

5-12 Terminal 27 Digital Input

Option:		Function:
		Select the function from the available digital input range.

No operation	[0]
Reset	[1]
Coast inverse	[2]
Coast and reset inverse	[3]
Quick stop inverse	[4]
DC-brake inverse	[5]
Stop inverse	[6]
Start	[8]
Latched start	[9]
Reversing	[10]
Start reversing	[11]
Enable start forward	[12]
Enable start reverse	[13]
Jog	[14]
Preset ref bit 0	[16]
Preset ref bit 1	[17]
Preset ref bit 2	[18]
Freeze reference	[19]
Freeze output	[20]
Speed up	[21]
Speed down	[22]
Set-up select bit 0	[23]
Set-up select bit 1	[24]
Catch up	[28]
Slow down	[29]

5-12 Terminal 27 Digital Input

Option:	Function:		
		Pulse input	[32]
		Ramp bit 0	[34]
		Ramp bit 1	[35]
		Mains failure inverse	[36]
		DigiPot Increase	[55]
		DigiPot Decrease	[56]
		DigiPot Clear	[57]
		Reset Counter A	[62]
		Reset Counter B	[65]

4.3 Parameter Menu Structure

0-**	**Operation / Display**
0-0*	**Basic Settings**
0-01	Language
0-02	Motor Speed Unit
0-03	Regional Settings
0-04	Operating State at Power-up (Hand)
0-09	Performance Monitor
0-1*	**Set-up Operations**
0-10	Active Set-up
0-11	Edit Set-up
0-12	This Set-up Linked to
0-13	Readout: Linked Set-ups
0-14	Readout: Edit Set-ups / Channel
0-15	Readout: actual setup
0-2*	**LCP Display**
0-20	Display Line 1.1 Small
0-21	Display Line 1.2 Small
0-22	Display Line 1.3 Small
0-23	Display Line 2 Large
0-24	Display Line 3 Large
0-25	My Personal Menu
0-3*	**LCP Custom Readout**
0-30	Unit for User-defined Readout
0-31	Min Value of User-defined Readout
0-32	Max Value of User-defined Readout
0-33	Source for User-defined Readout
0-37	Display Text 1
0-38	Display Text 2
0-39	Display Text 3
0-4*	**LCP Keypad**
0-40	[Hand on] Key on LCP
0-41	[Off] Key on LCP
0-42	[Auto on] Key on LCP
0-43	[Reset] Key on LCP
0-44	[Off/Reset] Key on LCP
0-45	[Drive Bypass] Key on LCP
0-5*	**Copy/Save**
0-50	LCP Copy
0-51	Set-up Copy
0-6*	**Password**
0-60	Main Menu Password
0-61	Access to Main Menu w/o Password
0-65	Quick Menu Password
0-66	Access to Quick Menu w/o Password
0-67	Bus Password Access
0-68	Safety Parameters Password
0-69	Password Protection of Safety Parameters
1-**	**Load and Motor**
1-0*	**General Settings**
1-00	Configuration Mode
1-01	Motor Control Principle
1-02	Flux Motor Feedback Source
1-03	Torque Characteristics
1-04	Overload Mode
1-05	Local Mode Configuration
1-06	Clockwise Direction
1-07	Motor Angle Offset Adjust
1-1*	**Special Settings**
1-10	Motor Construction
1-11	Motor Model
1-14	Damping Gain
1-15	Low Speed Filter Time Const.
1-16	High Speed Filter Time Const.
1-17	Voltage filter time const.
1-18	Min. Current at No Load
1-2*	**Motor Data**
1-20	Motor Power [kW]
1-21	Motor Power [HP]
1-22	Motor Voltage
1-23	Motor Frequency
1-24	Motor Current
1-25	Motor Nominal Speed
1-26	Motor Cont. Rated Torque
1-29	Automatic Motor Adaptation (AMA)
1-3*	**Adv. Motor Data**
1-30	Stator Resistance (Rs)
1-31	Rotor Resistance (Rr)
1-33	Stator Leakage Reactance (X1)
1-34	Rotor Leakage Reactance (X2)
1-35	Main Reactance (Xh)
1-36	Iron Loss Resistance (Rfe)
1-37	d-axis Inductance (Ld)
1-38	q-axis Inductance (Lq)
1-39	Motor Poles
1-40	Back EMF at 1000 RPM
1-41	Motor Angle Offset
1-44	d-axis Inductance Sat. (LdSat)
1-45	q-axis Inductance Sat. (LqSat)
1-46	Position Detection Gain
1-47	Torque Calibration
1-48	Inductance Sat. Point
1-5*	**Load Indep. Setting**
1-50	Motor Magnetisation at Zero Speed
1-51	Min Speed Normal Magnetising [RPM]
1-52	Min Speed Normal Magnetising [Hz]
1-53	Model Shift Frequency
1-54	Voltage reduction in fieldweakening
1-55	U/f Characteristic - U
1-56	U/f Characteristic - F
1-57	Torque Estimation Time Constant
1-58	Flying Start Test Pulses Current
1-59	Flying Start Test Pulses Frequency
1-6*	**Load Depen. Setting**
1-60	Low Speed Load Compensation
1-61	High Speed Load Compensation
1-62	Slip Compensation
1-63	Slip Compensation Time Constant
1-64	Resonance Damping
1-65	Resonance Damping Time Constant
1-66	Min. Current at Low Speed
1-67	Load Type
1-68	Motor Inertia
1-69	System Inertia
1-7*	**Start Adjustments**
1-70	PM Start Mode
1-71	Start Delay
1-72	Start Function
1-73	Flying Start
1-74	Start Speed [RPM]
1-75	Start Speed [Hz]
1-76	Start Current
1-8*	**Stop Adjustments**
1-80	Function at Stop
1-81	Min Speed for Function at Stop [RPM]
1-82	Min Speed for Function at Stop [Hz]
1-83	Precise Stop Function
1-84	Precise Stop Counter Value
1-85	Precise Stop Speed Compensation Delay
1-9*	**Motor Temperature**
1-90	Motor Thermal Protection
1-91	Motor External Fan
1-93	Thermistor Resource
1-94	ATEX ETR cur.lim. speed reduction
1-95	KTY Sensor Type
1-96	KTY Thermistor Resource
1-97	KTY Threshold level
1-98	ATEX ETR interpol. points freq.
1-99	ATEX ETR interpol points current
2-**	**Brakes**
2-0*	**DC-Brake**
2-00	DC Hold Current
2-01	DC Brake Current
2-02	DC Braking Time
2-03	DC Brake Cut In Speed [RPM]
2-04	DC Brake Cut In Speed [Hz]
2-05	Maximum Reference
2-06	Parking Current
2-07	Parking Time
2-1*	**Brake Energy Funct.**
2-10	Brake Function
2-11	Brake Resistor (ohm)
2-12	Brake Power Limit (kW)
2-13	Brake Power Monitoring
2-15	Brake Check
2-16	AC brake Max. Current
2-17	Over-voltage Control
2-18	Brake Check Condition
2-19	Over-voltage Gain
2-2*	**Mechanical Brake**
2-20	Release Brake Current
2-21	Activate Brake Speed [RPM]
2-22	Activate Brake Speed [Hz]
2-23	Activate Brake Delay
2-24	Stop Delay
2-25	Brake Release Time
2-26	Torque Ref
2-27	Torque Ramp Up Time
2-28	Gain Boost Factor
2-29	Torque Ramp Down Time
2-3*	**Adv. Mech Brake**
2-30	Position P Start Proportional Gain
2-31	Speed PID Start Proportional Gain
2-32	Speed PID Start Integral Time
2-33	Speed PID Start Lowpass Filter Time
3-**	**Reference / Ramps**
3-0*	**Reference Limits**
3-00	Reference Range
3-01	Reference/Feedback Unit
3-02	Minimum Reference
3-03	Maximum Reference
3-04	Reference Function
3-05	On Reference Window
3-06	Minimum Position
3-07	Maximum Position
3-08	On Target Window
3-09	On Target Time
3-1*	**References**
3-10	Preset Reference
3-11	Jog Speed [Hz]
3-12	Catch up/slow Down Value
3-13	Reference Site
3-14	Preset Relative Reference
3-15	Reference Resource 1
3-16	Reference Resource 2
3-17	Reference Resource 3
3-18	Relative Scaling Reference Resource
3-19	Jog Speed [RPM]
3-2*	**References II**
3-20	Preset Target
3-21	Touch Target
3-22	Master Scale Numerator
3-23	Master Scale Denominator
3-24	Master Lowpass Filter Time
3-25	Master Bus Resolution
3-26	Master Offset
3-4*	**Ramp 1**
3-40	Ramp 1 Type
3-41	Ramp 1 Ramp Up Time
3-42	Ramp 1 Ramp Down Time
3-45	Ramp 1 S-ramp Ratio at Accel. Start
3-46	Ramp 1 S-ramp Ratio at Accel. End
3-47	Ramp 1 S-ramp Ratio at Decel. Start
3-48	Ramp 1 S-ramp Ratio at Decel. End
3-5*	**Ramp 2**
3-50	Ramp 2 Type
3-51	Ramp 2 Ramp Up Time
3-52	Ramp 2 Ramp Down Time
3-55	Ramp 2 S-ramp Ratio at Accel. Start
3-56	Ramp 2 S-ramp Ratio at Accel. End
3-57	Ramp 2 S-ramp Ratio at Decel. Start
3-58	Ramp 2 S-ramp Ratio at Decel. End
3-6*	**Ramp 3**
3-60	Ramp 3 Type
3-61	Ramp 3 Ramp up Time
3-62	Ramp 3 Ramp down Time
3-65	Ramp 3 S-ramp Ratio at Accel. Start
3-66	Ramp 3 S-ramp Ratio at Accel. End
3-67	Ramp 3 S-ramp Ratio at Decel. Start
3-68	Ramp 3 S-ramp Ratio at Decel. End
3-7*	**Ramp 4**
3-70	Ramp 4 Type
3-71	Ramp 4 Ramp up Time
3-72	Ramp 4 Ramp Down Time
3-75	Ramp 4 S-ramp Ratio at Accel. Start
3-76	Ramp 4 S-ramp Ratio at Accel. End
3-77	Ramp 4 S-ramp Ratio at Decel. Start
3-78	Ramp 4 S-ramp Ratio at Decel. End
3-8*	**Other Ramps**
3-80	Jog Ramp Time
3-81	Quick Stop Ramp Time
3-82	Quick Stop Ramp Type
3-83	Quick Stop S-ramp Ratio at Decel. Start
3-84	Quick Stop S-ramp Ratio at Decel. End
3-89	Ramp Lowpass Filter Time
3-9*	**Digital Pot.Meter**
3-90	Step Size
3-91	Ramp Time
3-92	Power Restore
3-93	Maximum Limit
3-94	Minimum Limit
3-95	Ramp Delay
4-**	**Limits / Warnings**
4-1*	**Motor Limits**
4-10	Motor Speed Direction
4-11	Motor Speed Low Limit [RPM]
4-12	Motor Speed Low Limit [Hz]
4-13	Motor Speed High Limit [RPM]
4-14	Motor Speed High Limit [Hz]
4-16	Torque Limit Motor Mode
4-17	Torque Limit Generator Mode
4-18	Current Limit
4-19	Max Output Frequency
4-2*	**Limit Factors**
4-20	Torque Limit Factor Source
4-21	Speed Limit Factor Source
4-23	Brake Check Limit Factor Source
4-24	Brake Check Limit Factor
4-3*	**Motor Speed Mon.**
4-30	Motor Feedback Loss Function
4-31	Motor Feedback Speed Error
4-32	Motor Feedback Loss Timeout
4-34	Tracking Error Function
4-35	Tracking Error
4-36	Tracking Error Timeout
4-37	Tracking Error Ramping
4-38	Tracking Error Ramping Timeout
4-39	Tracking Error After Ramping Timeout
4-4*	**Speed Monitor**
4-43	Motor Speed Monitor Function
4-44	Motor Speed Monitor Max
4-45	Motor Speed Monitor Timeout
4-5*	**Adj. Warnings**
4-50	Warning Current Low
4-51	Warning Current High
4-52	Warning Speed Low
4-53	Warning Speed High
4-54	Warning Reference Low
4-55	Warning Reference High
4-56	Warning Feedback Low
4-57	Warning Feedback High
4-58	Missing Motor Phase Function
4-59	Motor Check At Start

4-6*	**Speed Bypass**
4-60	Bypass Speed From [RPM]
4-61	Bypass Speed From [Hz]
4-62	Bypass Speed To [RPM]
4-63	Bypass Speed To [Hz]
4-7*	**Position Monitor**
4-70	Position Error Function
4-71	Maximum Position Error
4-72	Position Error Timeout
4-73	Position Limit Function
5-**	**Digital In/Out**
5-0*	**Digital I/O mode**
5-00	Digital I/O Mode
5-01	Terminal 27 Mode
5-02	Terminal 29 Mode
5-1*	**Digital Inputs**
5-10	Terminal 18 Digital Input
5-11	Terminal 19 Digital Input
5-12	Terminal 27 Digital Input
5-13	Terminal 29 Digital Input
5-14	Terminal 32 Digital Input
5-15	Terminal 33 Digital Input
5-16	Terminal X30/2 Digital Input
5-17	Terminal X30/3 Digital Input
5-18	Terminal X30/4 Digital Input
5-19	Terminal 37 Safe Stop
5-20	Terminal X46/1 Digital Input
5-21	Terminal X46/3 Digital Input
5-22	Terminal X46/5 Digital Input
5-23	Terminal X46/7 Digital Input
5-24	Terminal X46/9 Digital Input
5-25	Terminal X46/11 Digital Input
5-26	Terminal X46/13 Digital Input
5-3*	**Digital Outputs**
5-30	Terminal 27 Digital Output
5-31	Terminal 29 Digital Output
5-32	Term X30/6 Digi Out (MCB 101)
5-33	Term X30/7 Digi Out (MCB 101)
5-4*	**Relays**
5-40	Function Relay
5-41	On Delay, Relay
5-42	Off Delay, Relay
5-5*	**Pulse Input**
5-50	Term. 29 Low Frequency
5-51	Term. 29 High Frequency
5-52	Term. 29 Low Ref./Feedb. Value
5-53	Term. 29 High Ref./Feedb. Value
5-54	Pulse Filter Time Constant #29
5-55	Term. 33 Low Frequency
5-56	Term. 33 High Frequency
5-57	Term. 33 Low Ref./Feedb. Value
5-58	Term. 33 High Ref./Feedb. Value
5-59	Pulse Filter Time Constant #33
5-6*	**Pulse Output**
5-60	Terminal 27 Pulse Output Variable
5-62	Pulse Output Max Freq #27
5-63	Terminal 29 Pulse Output Variable
5-65	Pulse Output Max Freq #29
5-66	Terminal X30/6 Pulse Output Variable
5-68	Pulse Output Max Freq #X30/6
5-7*	**24V Encoder Input**
5-70	Term 32/33 Pulses Per Revolution
5-71	Term 32/33 Encoder Direction
5-72	Term 32/33 Encoder Type
5-8*	**I/O Options**
5-80	AHF Cap Reconnect Delay
5-9*	**Bus Controlled**
5-90	Digital & Relay Bus Control
5-93	Pulse Out #27 Bus Control
5-94	Pulse Out #27 Timeout Preset
5-95	Pulse Out #29 Bus Control
5-96	Pulse Out #29 Timeout Preset
5-97	Pulse Out #X30/6 Bus Control
5-98	Pulse Out #X30/6 Timeout Preset
6-**	**Analog In/Out**
6-0*	**Analog I/O Mode**
6-00	Live Zero Timeout Time
6-01	Live Zero Timeout Function
6-1*	**Analog Input 1**
6-10	Terminal 53 Low Voltage
6-11	Terminal 53 High Voltage
6-12	Terminal 53 Low Current
6-13	Terminal 53 High Current
6-14	Terminal 53 Low Ref./Feedb. Value
6-15	Terminal 53 High Ref./Feedb. Value
6-16	Terminal 53 Filter Time Constant
6-2*	**Analog Input 2**
6-20	Terminal 54 Low Voltage
6-21	Terminal 54 High Voltage
6-22	Terminal 54 Low Current
6-23	Terminal 54 High Current
6-24	Terminal 54 Low Ref./Feedb. Value
6-25	Terminal 54 High Ref./Feedb. Value
6-26	Terminal 54 Filter Time Constant
6-3*	**Analog Input 3**
6-30	Terminal X30/11 Low Voltage
6-31	Terminal X30/11 High Voltage
6-34	Term. X30/11 Low Ref./Feedb. Value
6-35	Term. X30/11 High Ref./Feedb. Value
6-36	Term. X30/11 Filter Time Constant
6-4*	**Analog Input 4**
6-40	Terminal X30/12 Low Voltage
6-41	Terminal X30/12 High Voltage
6-44	Term. X30/12 Low Ref./Feedb. Value
6-45	Term. X30/12 High Ref./Feedb. Value
6-46	Term. X30/12 Filter Time Constant
6-5*	**Analog Output 1**
6-50	Terminal 42 Output
6-51	Terminal 42 Output Min Scale
6-52	Terminal 42 Output Max Scale
6-53	Term 42 Output Bus Ctrl
6-54	Terminal 42 Output Timeout Preset
6-55	Analog Output Filter
6-6*	**Analog Output 2**
6-60	Terminal X30/8 Output
6-61	Terminal X30/8 Min. Scale
6-62	Terminal X30/8 Max. Scale
6-63	Terminal X30/8 Bus Control
6-64	Terminal X30/8 Output Timeout Preset
6-7*	**Analog Output 3**
6-70	Terminal X45/1 Output
6-71	Terminal X45/1 Min. Scale
6-72	Terminal X45/1 Max. Scale
6-73	Terminal X45/1 Bus Control
6-74	Terminal X45/1 Output Timeout Preset
6-8*	**Analog Output 4**
6-80	Terminal X45/3 Output
6-81	Terminal X45/3 Min. Scale
6-82	Terminal X45/3 Max. Scale
6-83	Terminal X45/3 Bus Control
6-84	Terminal X45/3 Output Timeout Preset
7-**	**Controllers**
7-0*	**Speed PID Ctrl.**
7-00	Speed PID Feedback Source
7-01	Speed PID Droop
7-02	Speed PID Proportional Gain
7-03	Speed PID Integral Time
7-04	Speed PID Differentiation Time
7-05	Speed PID Diff. Gain Limit
7-06	Speed PID Lowpass Filter Time
7-07	Speed PID Feedback Gear Ratio
7-08	Speed PID Feed Forward Factor
7-09	Speed PID Error Correction w/ Ramp
7-1*	**Torque PI Ctrl.**
7-10	Torque PI Feedback Source
7-12	Torque PI Proportional Gain
7-13	Torque PI Integration Time
7-16	Torque PI Lowpass Filter Time
7-18	Torque PI Feed Forward Factor
7-19	Current Controller Rise Time
7-2*	**Process Ctrl. Feedb**
7-20	Process CL Feedback 1 Resource
7-22	Process CL Feedback 2 Resource
7-3*	**Process PID Ctrl.**
7-30	Process PID Normal/ Inverse Control
7-31	Process PID Anti Windup
7-32	Process PID Start Speed
7-33	Process PID Proportional Gain
7-34	Process PID Integral Time
7-35	Process PID Differentiation Time
7-36	Process PID Diff. Gain Limit
7-38	Process PID Feed Forward Factor
7-39	On Reference Bandwidth
7-4*	**Adv. Process PID I**
7-40	Process PID I-part Reset
7-41	Process PID Output Neg. Clamp
7-42	Process PID Output Pos. Clamp
7-43	Process PID Gain Scale at Min. Ref.
7-44	Process PID Gain Scale at Max. Ref.
7-45	Process PID Feed Fwd Resource
7-46	Process PID Feed Fwd Normal/ Inv. Ctrl.
7-48	PCD Feed Forward
7-49	Process PID Output Normal/ Inv. Ctrl.
7-5*	**Adv. Process PID II**
7-50	Process PID Extended PID
7-51	Process PID Feed Fwd Gain
7-52	Process PID Feed Fwd Ramp up
7-53	Process PID Feed Fwd Ramp down
7-56	Process PID Ref. Filter Time
7-57	Process PID Fb. Filter Time
7-9*	**Position PI Ctrl.**
7-90	Position PI Feedback Source
7-92	Position PI Proportional Gain
7-93	Position PI Integral Time
7-94	Position PI Feedback Scale Numerator
7-95	Position PI Feebback Scale Denominator
7-97	Position PI Maximum Speed Above Master
7-98	Position PI Feed Forward Factor
7-99	Position PI Minimum Ramp Time
8-**	**Comm. and Options**
8-0*	**General Settings**
8-01	Control Site
8-02	Control Word Source
8-03	Control Word Timeout Time
8-04	Control Word Timeout Function
8-05	End-of-Timeout Function
8-06	Reset Control Word Timeout
8-07	Diagnosis Trigger
8-08	Readout Filtering
8-1*	**Ctrl. Word Settings**
8-10	Control Word Profile
8-13	Configurable Status Word STW
8-14	Configurable Control Word CTW
8-17	Configurable Alarm and Warningword
8-19	Product Code
8-3*	**FC Port Settings**
8-30	Protocol
8-31	Address
8-32	FC Port Baud Rate
8-33	Parity / Stop Bits
8-34	Estimated cycle time
8-35	Minimum Response Delay
8-36	Max Response Delay
8-37	Max Inter-Char Delay
8-4*	**FC MC protocol set**
8-40	Telegram Selection
8-41	Parameters for Signals
8-42	PCD Write Configuration
8-43	PCD Read Configuration
8-45	BTM Transaction Command
8-46	BTM Transaction Status
8-47	BTM Timeout
8-48	BTM Maximum Errors
8-49	BTM Error Log
8-5*	**Digital/Bus**
8-50	Coasting Select
8-51	Quick Stop Select
8-52	DC Brake Select
8-53	Start Select
8-54	Reversing Select
8-55	Set-up Select
8-56	Preset Reference Select
8-57	Profidrive OFF2 Select
8-58	Profidrive OFF3 Select
8-8*	**FC Port Diagnostics**
8-80	Bus Message Count
8-81	Bus Error Count
8-82	Slave Messages Rcvd
8-83	Slave Error Count
8-9*	**Bus Jog**
8-90	Bus Jog 1 Speed
8-91	Bus Jog 2 Speed
9-**	**PROFIdrive**
9-00	Setpoint
9-07	Actual Value
9-15	PCD Write Configuration
9-16	PCD Read Configuration
9-18	Node Address
9-19	Drive Unit System Number
9-22	Telegram Selection
9-23	Parameters for Signals
9-27	Parameter Edit
9-28	Process Control
9-44	Fault Message Counter
9-45	Fault Code
9-47	Fault Number
9-52	Fault Situation Counter
9-53	Profibus Warning Word
9-63	Actual Baud Rate
9-64	Device Identification
9-65	Profile Number
9-67	Control Word 1
9-68	Status Word 1
9-70	Edit Set-up
9-71	Profibus Save Data Values
9-72	ProfibusDriveReset
9-75	DO Identification
9-80	Defined Parameters (1)
9-81	Defined Parameters (2)
9-82	Defined Parameters (3)
9-83	Defined Parameters (4)
9-84	Defined Parameters (5)
9-85	Defined Parameters (6)
9-90	Changed Parameters (1)
9-91	Changed Parameters (2)
9-92	Changed Parameters (3)
9-93	Changed Parameters (4)
9-94	Changed Parameters (5)
9-99	Profibus Revision Counter
10-**	**CAN Fieldbus**
10-0*	**Common Settings**
10-00	CAN Protocol
10-01	Baud Rate Select
10-02	MAC ID
10-05	Readout Transmit Error Counter
10-06	Readout Receive Error Counter
10-07	Readout Bus Off Counter
10-1*	**DeviceNet**
10-10	Process Data Type Selection
10-11	Process Data Config Write
10-12	Process Data Config Read
10-13	Warning Parameter

10-14 Net Reference
10-15 Net Control
10-2* COS Filters
10-20 COS Filter 1
10-21 COS Filter 2
10-22 COS Filter 3
10-23 COS Filter 4
10-3* Parameter Access
10-30 Array Index
10-31 Store Data Values
10-32 Devicenet Revision
10-33 Store Always
10-34 DeviceNet Product Code
10-39 Devicenet F Parameters
10-5* CANopen
10-50 Process Data Config Write.
10-51 Process Data Config Read.
12- Ethernet**
12-0* IP Settings
12-00 IP Address Assignment
12-01 IP Address
12-02 Subnet Mask
12-03 Default Gateway
12-04 DHCP Server
12-05 Lease Expires
12-06 Name Servers
12-07 Domain Name
12-08 Host Name
12-09 Physical Address
12-1* Ethernet Link Parameters
12-10 Link Status
12-11 Link Duration
12-12 Auto Negotiation
12-13 Link Speed
12-14 Link Duplex
12-18 Supervisor MAC
12-19 Supervisor IP Addr.
12-2* Process Data
12-20 Control Instance
12-21 Process Data Config Write
12-22 Process Data Config Read
12-23 Process Data Config Write Size
12-24 Process Data Config Read Size
12-27 Master Address
12-28 Store Data Values
12-29 Store Always
12-3* EtherNet/IP
12-30 Warning Parameter
12-31 Net Reference
12-32 Net Control
12-33 CIP Revision
12-34 CIP Product Code
12-35 EDS Parameter
12-37 COS Inhibit Timer
12-38 COS Filter
12-4* Modbus TCP
12-40 Status Parameter
12-41 Slave Message Count
12-42 Slave Exception Message Count
12-5* EtherCAT
12-50 Configured Station Alias
12-51 Configured Station Address
12-59 EtherCAT Status
12-6* Ethernet PowerLink
12-60 Node ID
12-62 SDO Timeout
12-63 Basic Ethernet Timeout
12-66 Threshold
12-67 Threshold Counters
12-68 Cumulative Counters
12-69 Ethernet PowerLink Status
12-8* Other Ethernet Services
12-80 FTP Server
12-81 HTTP Server
12-82 SMTP Service
12-83 SNMP Agent
12-84 Address Conflict Detection
12-85 ACD Last Conflict
12-89 Transparent Socket Channel Port
12-9* Advanced Ethernet Services
12-90 Cable Diagnostic
12-91 Auto Cross Over
12-92 IGMP Snooping
12-93 Cable Error Length
12-94 Broadcast Storm Protection
12-95 Inactivity timeout
12-96 Port Config
12-97 QoS Priority
12-98 Interface Counters
12-99 Media Counters
13- Smart Logic**
13-0* SLC Settings
13-00 SL Controller Mode
13-01 Start Event
13-02 Stop Event
13-03 Reset SLC
13-1* Comparators
13-10 Comparator Operand
13-11 Comparator Operator
13-12 Comparator Value
13-1* RS Flip Flops
13-15 RS-FF Operand S
13-16 RS-FF Operand R
13-2* Timers
13-20 SL Controller Timer
13-4* Logic Rules
13-40 Logic Rule Boolean 1
13-41 Logic Rule Operator 1
13-42 Logic Rule Boolean 2
13-43 Logic Rule Operator 2
13-44 Logic Rule Boolean 3
13-5* States
13-51 SL Controller Event
13-52 SL Controller Action
14- Special Functions**
14-0* Inverter Switching
14-00 Switching Pattern
14-01 Switching Frequency
14-03 Overmodulation
14-04 Acoustic Noise Reduction
14-06 Dead Time Compensation
14-1* Mains Failure
14-10 Mains Failure
14-11 Mains Fault Voltage Level
14-12 Response to Mains Imbalance
14-14 Kin. Back-up Time-out
14-15 Kin. Back-up Trip Recovery Level
14-16 Kin. Back-up Gain
14-2* Trip Reset
14-20 Reset Mode
14-21 Automatic Restart Time
14-22 Operation Mode
14-24 Trip Delay at Current Limit
14-25 Trip Delay at Torque Limit
14-26 Trip Delay at Inverter Fault
14-28 Production Settings
14-29 Service Code
14-3* Current Limit Ctrl.
14-30 Current Lim Ctrl, Proportional Gain
14-31 Current Lim Ctrl, Integration Time
14-32 Current Lim Ctrl, Filter Time
14-35 Stall Protection
14-36 Field-weakening Function
14-37 Fieldweakening Speed
14-4* Energy Optimising
14-40 VT Level
14-41 AEO Minimum Magnetisation
14-42 Minimum AEO Frequency
14-43 Motor Cosphi
14-5* Environment
14-50 RFI Filter
14-51 DC-Link Compensation
14-52 Fan Control
14-53 Fan Monitor
14-55 Output Filter
14-56 Capacitance Output Filter
14-57 Inductance Output Filter
14-59 Actual Number of Inverter Units
14-7* Compatibility
14-72 Legacy Alarm Word
14-73 Legacy Warning Word
14-74 Leg. Ext. Status Word
14-8* Options
14-80 Option Supplied by External 24VDC
14-88 Option Data Storage
14-89 Option Detection
14-9* Fault Settings
14-90 Fault Level
15- Drive Information**
15-0* Operating Data
15-00 Operating hours
15-01 Running Hours
15-02 kWh Counter
15-03 Power Up's
15-04 Over Temp's
15-05 Over Volt's
15-06 Reset kWh Counter
15-07 Reset Running Hours Counter
15-1* Data Log Settings
15-10 Logging Source
15-11 Logging Interval
15-12 Trigger Event
15-13 Logging Mode
15-14 Samples Before Trigger
15-2* Historic Log
15-20 Historic Log: Event
15-21 Historic Log: Value
15-22 Historic Log: Time
15-3* Fault Log
15-30 Fault Log: Error Code
15-31 Fault Log: Value
15-32 Fault Log: Time
15-4* Drive Identification
15-40 FC Type
15-41 Power Section
15-42 Voltage
15-43 Software Version
15-44 Ordered Typecode String
15-45 Actual Typecode String
15-46 Frequency Converter Ordering No
15-47 Power Card Ordering No
15-48 LCP Id No
15-49 SW ID Control Card
15-50 SW ID Power Card
15-51 Frequency Converter Serial Number
15-53 Power Card Serial Number
15-54 Config File Name
15-59 Filename
15-6* Option Ident
15-60 Option Mounted
15-61 Option SW Version
15-62 Option Ordering No
15-63 Option Serial No
15-70 Option in Slot A
15-71 Slot A Option SW Version
15-72 Option in Slot B
15-73 Slot B Option SW Version
15-74 Option in Slot C0/E0
15-75 Slot C0/E0 Option SW Version
15-76 Option in Slot C1/E1
15-77 Slot C1/E1 Option SW Version
15-8* Operating Data II
15-80 Fan Running Hours
15-81 Preset Fan Running Hours
15-89 Configuration Change Counter
15-9* Parameter Info
15-92 Defined Parameters
15-93 Modified Parameters
15-98 Drive Identification
15-99 Parameter Metadata
16- Data Readouts**
16-0* General Status
16-00 Control Word
16-01 Reference [Unit]
16-02 Reference %
16-03 Status Word
16-05 Main Actual Value [%]
16-06 Actual Position
16-07 Target Position
16-08 Position Error
16-09 Custom Readout
16-1* Motor Status
16-10 Power [kW]
16-11 Power [hp]
16-12 Motor Voltage
16-13 Frequency
16-14 Motor current
16-15 Frequency [%]
16-16 Torque [Nm]
16-17 Speed [RPM]
16-18 Motor Thermal
16-19 KTY sensor temperature
16-20 Motor Angle
16-21 Torque [%] High Res.
16-22 Torque [%]
16-23 Motor Shaft Power [kW]
16-24 Calibrated Stator Resistance
16-25 Torque [Nm] High
16-3* Drive Status
16-30 DC Link Voltage
16-31 System Temp.
16-32 Brake Energy /s
16-33 Brake Energy Average
16-34 Heatsink Temp.
16-35 Inverter Thermal
16-36 Inv. Nom. Current
16-37 Inv. Max. Current
16-38 SL Controller State
16-39 Control Card Temp.
16-40 Logging Buffer Full
16-41 LCP Bottom Statusline
16-44 Speed Error [RPM]
16-45 Motor Phase U Current
16-46 Motor Phase V Current
16-47 Motor Phase W Current
16-48 Speed Ref. After Ramp [RPM]
16-49 Current Fault Source
16-5* Ref. & Feedb.
16-50 External Reference
16-51 Pulse Reference
16-52 Feedback[Unit]
16-53 Digi Pot Reference
16-57 Feedback [RPM]
16-6* Inputs & Outputs
16-60 Digital Input
16-61 Terminal 53 Switch Setting
16-62 Analog Input 53
16-63 Terminal 54 Switch Setting
16-64 Analog Input 54
16-65 Analog Output 42 [mA]
16-66 Digital Output [bin]
16-67 Freq. Input #29 [Hz]
16-68 Freq. Input #33 [Hz]
16-69 Pulse Output #27 [Hz]
16-70 Pulse Output #29 [Hz]

16-71 Relay Output [bin]
16-72 Counter A
16-73 Counter B
16-74 Prec. Stop Counter
16-75 Analog In X30/11
16-76 Analog In X30/12
16-77 Analog Out X30/8 [mA]
16-78 Analog Out X45/1 [mA]
16-79 Analog Out X45/3 [mA]
16-8* Fieldbus & FC Port
16-80 Fieldbus CTW 1
16-82 Fieldbus REF 1
16-83 Fieldbus REF 2
16-84 Comm. Option STW
16-85 FC Port CTW 1
16-86 FC Port REF 1
16-87 Bus Readout Alarm/Warning
16-89 Configurable Alarm/Warning Word
16-9* Diagnosis Readouts
16-90 Alarm Word
16-91 Alarm Word 2
16-92 Warning Word
16-93 Warning Word 2
16-94 Ext. Status Word
17- Position Feedback**
17-1* Inc. Enc. Interface
17-10 Signal Type
17-11 Resolution (PPR)
17-2* Abs. Enc. Interface
17-20 Protocol Selection
17-21 Resolution (Positions/Rev)
17-22 Multiturn Revolutions
17-24 SSI Data Length
17-25 Clock Rate
17-26 SSI Data Format
17-34 HIPERFACE Baudrate
17-5* Resolver Interface
17-50 Poles
17-51 Input Voltage
17-52 Input Frequency
17-53 Transformation Ratio
17-56 Encoder Sim. Resolution
17-59 Resolver Interface
17-6* Monitoring and App.
17-60 Feedback Direction
17-61 Feedback Signal Monitoring
17-7* Position Scaling
17-70 Position Unit
17-71 Position Unit Scale
17-72 Position Unit Numerator
17-73 Position Unit Denominator
17-74 Position Offset
17-75 Position Recovery at Power-up
17-76 Position Axis Mode
17-8* Position Homing
17-80 Homing Function
17-81 Home Sync Function
17-82 Home Position
17-83 Homing Speed
17-84 Homing Torque Limit
17-85 Homing Timout
17-9* Position Config
17-90 Absolute Position Mode
17-91 Relative Position Mode
17-92 Position Control Selection
18- Data Readouts 2**
18-3* Analog Readouts
18-36 Analog Input X48/2 [mA]
18-37 Temp. Input X48/4
18-38 Temp. Input X48/7
18-39 Temp. Input X48/10
18-4* PGIO Data Readouts
18-43 Analog Out X49/7
18-44 Analog Out X49/9
18-45 Analog Out X49/11
18-5* Active Alarms/Warnings
18-55 Active Alarm Numbers
18-56 Active Warning Numbers
18-6* Inputs & Outputs 2
18-60 Digital Input 2
18-7* Rectifier Status
18-70 Mains Voltage
18-71 Mains Frequency
18-72 Mains Imbalance
18-75 Rectifier DC Volt.
18-9* PID Readouts
18-90 Process PID Error
18-91 Process PID Output
18-92 Process PID Clamped Output
18-93 Process PID Gain Scaled Output
22- Appl. Functions**
22-0* Miscellaneous
22-00 External Interlock Delay
30- Special Features**
30-0* Wobbler
30-00 Wobble Mode
30-01 Wobble Delta Frequency [Hz]
30-02 Wobble Delta Frequency [%]
30-03 Wobble Delta Freq. Scaling Resource
30-04 Wobble Jump Frequency [Hz]
30-05 Wobble Jump Frequency [%]
30-06 Wobble Jump Time
30-07 Wobble Sequence Time
30-08 Wobble Up/ Down Time
30-09 Wobble Random Function
30-10 Wobble Ratio
30-11 Wobble Random Ratio Max.
30-12 Wobble Random Ratio Min.
30-19 Wobble Delta Freq. Scaled
30-2* Adv. Start Adjust
30-20 High Starting Torque Time [s]
30-21 High Starting Torque Current [%]
30-22 Locked Rotor Protection
30-23 Locked Rotor Detection Time [s]
30-24 Locked Rotor Detection Speed Error [%]
30-25 Light Load Delay [s]
30-26 Light Load Current [%]
30-27 Light Load Speed [%]
30-5* Unit Configuration
30-50 Heat Sink Fan Mode
30-8* Compatibility (I)
30-80 d-axis Inductance (Ld)
30-81 Brake Resistor (ohm)
30-83 Speed PID Proportional Gain
30-84 Process PID Proportional Gain
31- Bypass Option**
31-00 Bypass Mode
31-01 Bypass Start Time Delay
31-02 Bypass Trip Time Delay
31-03 Test Mode Activation
31-10 Bypass Status Word
31-11 Bypass Running Hours
31-19 Remote Bypass Activation
32- MCO Basic Settings**
32-0* Encoder 2
32-00 Incremental Signal Type
32-01 Incremental Resolution
32-02 Absolute Protocol
32-03 Absolute Resolution
32-04 Absolute Encoder Baudrate X55
32-05 Absolute Encoder Data Length
32-06 Absolute Encoder Clock Frequency
32-07 Absolute Encoder Clock Generation
32-08 Absolute Encoder Cable Length
32-09 Encoder Monitoring
32-10 Rotational Direction
32-11 User Unit Denominator
32-12 User Unit Numerator
32-13 Enc.2 Control
32-14 Enc.2 node ID
32-15 Enc.2 CAN guard
32-3* Encoder 1
32-30 Incremental Signal Type
32-31 Incremental Resolution
32-32 Absolute Protocol
32-33 Absolute Resolution
32-35 Absolute Encoder Data Length
32-36 Absolute Encoder Clock Frequency
32-37 Absolute Encoder Clock Generation
32-38 Absolute Encoder Cable Length
32-39 Encoder Monitoring
32-40 Encoder Termination
32-43 Enc.1 Control
32-44 Enc.1 node ID
32-45 Enc.1 CAN guard
32-5* Feedback Source
32-50 Source Slave
32-51 MCO 302 Last Will
32-52 Source Master
32-6* PID Controller
32-60 Proportional factor
32-61 Derivative factor
32-62 Integral factor
32-63 Limit Value for Integral Sum
32-64 PID Bandwidth
32-65 Velocity Feed-Forward
32-66 Acceleration Feed-Forward
32-67 Max. Tolerated Position Error
32-68 Reverse Behavior for Slave
32-69 Sampling Time for PID Control
32-70 Scan Time for Profile Generator
32-71 Size of the Control Window (Activation)
32-72 Size of the Control Window (Deactiv.)
32-73 Integral limit filter time
32-74 Position error filter time
32-8* Velocity & Accel.
32-80 Maximum Velocity (Encoder)
32-81 Shortest Ramp
32-82 Ramp Type
32-83 Velocity Resolution
32-84 Default Velocity
32-85 Default Acceleration
32-86 Acc. up for limited jerk
32-87 Acc. down for limited jerk
32-88 Dec. up for limited jerk
32-89 Dec. down for limited jerk
32-9* Development
32-90 Debug Source
33- MCO Adv. Settings**
33-0* Home Motion
33-00 Force HOME
33-01 Zero Point Offset from Home Pos.
33-02 Ramp for Home Motion
33-03 Velocity of Home Motion
33-04 Behaviour during HomeMotion
33-1* Synchronization
33-10 Sync Factor Master
33-11 Sync Factor Slave
33-12 Position Offset for Synchronization
33-13 Accuracy Window for Position Sync.
33-14 Relative Slave Velocity Limit
33-15 Marker Number for Master
33-16 Marker Number for Slave
33-17 Master Marker Distance
33-18 Slave Marker Distance
33-19 Master Marker Type
33-20 Slave Marker Type
33-21 Master Marker Tolerance Window
33-22 Slave Marker Tolerance Window
33-23 Start Behaviour for Marker Sync
33-24 Marker Number for Fault
33-25 Marker Number for Ready
33-26 Velocity Filter
33-27 Offset Filter Time
33-28 Marker Filter Configuration
33-29 Filter Time for Marker Filter
33-30 Maximum Marker Correction
33-31 Synchronisation Type
33-32 Feed Forward Velocity Adaptation
33-33 Velocity Filter Window
33-34 Slave Marker filter time
33-4* Limit Handling
33-40 Behaviour atEnd Limit Switch
33-41 Negative Software End Limit
33-42 Positive Software End Limit
33-43 Negative Software End Limit Active
33-44 Positive Software End Limit Active
33-45 Time in Target Window
33-46 Target Window LimitValue
33-47 Size of Target Window
33-5* I/O Configuration
33-50 Terminal X57/1 Digital Input
33-51 Terminal X57/2 Digital Input
33-52 Terminal X57/3 Digital Input
33-53 Terminal X57/4 Digital Input
33-54 Terminal X57/5 Digital Input
33-55 Terminal X57/6 Digital Input
33-56 Terminal X57/7 Digital Input
33-57 Terminal X57/8 Digital Input
33-58 Terminal X57/9 Digital Input
33-59 Terminal X57/10 Digital Input
33-60 Terminal X59/1 and X59/2 Mode
33-61 Terminal X59/1 Digital Input
33-62 Terminal X59/2 Digital Input
33-63 Terminal X59/1 Digital Output
33-64 Terminal X59/2 Digital Output
33-65 Terminal X59/3 Digital Output
33-66 Terminal X59/4 Digital Output
33-67 Terminal X59/5 Digital Output
33-68 Terminal X59/6 Digital Output
33-69 Terminal X59/7 Digital Output
33-70 Terminal X59/8 Digital Output
33-8* Global Parameters
33-80 Activated Program Number
33-81 Power-up State
33-82 Drive Status Monitoring
33-83 Behaviour afterError
33-84 Behaviour afterEsc.
33-85 MCO Supplied by External 24VDC
33-86 Terminal at alarm
33-87 Terminal state at alarm
33-88 Status word at alarm
33-9* MCO Port Settings
33-90 X62 MCO CAN node ID
33-91 X62 MCO CAN baud rate
33-94 X60 MCO RS485 serial termination
33-95 X60 MCO RS485 serial baud rate
34- MCO Data Readouts**
34-0* PCD Write Par.
34-01 PCD 1 Write to MCO
34-02 PCD 2 Write to MCO
34-03 PCD 3 Write to MCO
34-04 PCD 4 Write to MCO
34-05 PCD 5 Write to MCO
34-06 PCD 6 Write to MCO
34-07 PCD 7 Write to MCO
34-08 PCD 8 Write to MCO
34-09 PCD 9 Write to MCO
34-10 PCD 10 Write to MCO
34-2* PCD Read Par.
34-21 PCD 1 Read from MCO
34-22 PCD 2 Read from MCO
34-23 PCD 3 Read from MCO

34-24	PCD 4 Read from MCO
34-25	PCD 5 Read from MCO
34-26	PCD 6 Read from MCO
34-27	PCD 7 Read from MCO
34-28	PCD 8 Read from MCO
34-29	PCD 9 Read from MCO
34-30	PCD 10 Read from MCO
34-4*	**Inputs & Outputs**
34-40	Digital Inputs
34-41	Digital Outputs
34-5*	**Process Data**
34-50	Actual Position
34-51	Commanded Position
34-52	Actual Master Position
34-53	Slave Index Position
34-54	Master Index Position
34-55	Curve Position
34-56	Track Error
34-57	Synchronizing Error
34-58	Actual Velocity
34-59	Actual Master Velocity
34-60	Synchronizing Status
34-61	Axis Status
34-62	Program Status
34-64	MCO 302 Status
34-65	MCO 302 Control
34-66	SPI Error Counter
34-7*	**Diagnosis readouts**
34-70	MCO Alarm Word 1
34-71	MCO Alarm Word 2
35-**	**Sensor Input Option**
35-0*	**Temp. Input Mode**
35-00	Term. X48/4 Temperature Unit
35-01	Term. X48/4 Input Type
35-02	Term. X48/7 Temperature Unit
35-03	Term. X48/7 Input Type
35-04	Term. X48/10 Temperature Unit
35-05	Term. X48/10 Input Type
35-06	Temperature Sensor Alarm Function
35-1*	**Temp. Input X48/4**
35-14	Term. X48/4 Filter Time Constant
35-15	Term. X48/4 Temp. Monitor
35-16	Term. X48/4 Low Temp. Limit
35-17	Term. X48/4 High Temp. Limit
35-2*	**Temp. Input X48/7**
35-24	Term. X48/7 Filter Time Constant
35-25	Term. X48/7 Temp. Monitor
35-26	Term. X48/7 Low Temp. Limit
35-27	Term. X48/7 High Temp. Limit
35-3*	**Temp. Input X48/10**
35-34	Term. X48/10 Filter Time Constant
35-35	Term. X48/10 Temp. Monitor
35-36	Term. X48/10 Low Temp. Limit
35-37	Term. X48/10 High Temp. Limit
35-4*	**Analog Input X48/2**
35-42	Term. X48/2 Low Current
35-43	Term. X48/2 High Current
35-44	Term. X48/2 Low Ref./Feedb. Value
35-45	Term. X48/2 High Ref./Feedb. Value
35-46	Term. X48/2 Filter Time Constant
36-**	**Programmable I/O Option**
36-0*	**I/O Mode**
36-03	Terminal X49/7 Mode
36-04	Terminal X49/9 Mode
36-05	Terminal X49/11 Mode
36-4*	**Output X49/7**
36-40	Terminal X49/7 Analogue Output
36-42	Terminal X49/7 Min. Scale
36-43	Terminal X49/7 Max. Scale
36-44	Terminal X49/7 Bus Control
36-45	Terminal X49/7 Timeout Preset
36-5*	**Output X49/9**
36-50	Terminal X49/9 Analogue Output
36-52	Terminal X49/9 Min. Scale
36-53	Terminal X49/9 Max. Scale
36-54	Terminal X49/9 Bus Control
36-55	Terminal X49/9 Timeout Preset
36-6*	**Output X49/11**
36-60	Terminal X49/11 Analogue Output
36-62	Terminal X49/11 Min. Scale
36-63	Terminal X49/11 Max. Scale
36-64	Terminal X49/11 Bus Control
36-65	Terminal X49/11 Timeout Preset
42-**	**Safety Functions**
42-1*	**Speed Monitoring**
42-10	Measured Speed Source
42-11	Encoder Resolution
42-12	Encoder Direction
42-13	Gear Ratio
42-14	Feedback Type
42-15	Feedback Filter
42-17	Tolerance Error
42-18	Zero Speed Timer
42-19	Zero Speed Limit
42-2*	**Safe Input**
42-20	Safe Function
42-21	Type
42-22	Discrepancy Time
42-23	Stable Signal Time
42-24	Restart Behaviour
42-3*	**General**
42-30	External Failure Reaction
42-31	Reset Source
42-33	Parameter Set Name
42-35	S-CRC Value
42-36	Level 1 Password
42-4*	**SS1**
42-40	Type
42-41	Ramp Profile
42-42	Delay Time
42-43	Delta T
42-44	Deceleration Rate
42-45	Delta V
42-46	Zero Speed
42-47	Ramp Time
42-48	S-ramp Ratio at Decel. Start
42-49	S-ramp Ratio at Decel. End
42-5*	**SLS**
42-50	Cut Off Speed
42-51	Speed Limit
42-52	Fail Safe Reaction
42-53	Start Ramp
42-54	Ramp Down Time
42-6*	**Safe Fieldbus**
42-60	Telegram Selection
42-61	Destination Address
42-8*	**Status**
42-80	Safe Option Status
42-81	Safe Option Status 2
42-82	Safe Control Word
42-83	Safe Status Word
42-85	Active Safe Func.
42-86	Safe Option Info
42-87	Time Until Manual Test
42-88	Supported Customization File Version
42-89	Customization File Version
42-9*	**Special**
42-90	Restart Safe Option
43-**	**Unit Readouts**
43-0*	**Component Status**
43-00	Component Temp.
43-01	Auxiliary Temp.
43-1*	**Power Card Status**
43-10	HS Temp. ph.U
43-11	HS Temp. ph.V
43-12	HS Temp. ph.W
43-13	PC Fan A Speed
43-14	PC Fan B Speed
43-15	PC Fan C Speed
43-2*	**Fan Pow.Card Status**
43-20	FPC Fan A Speed
43-21	FPC Fan B Speed
43-22	FPC Fan C Speed
43-23	FPC Fan D Speed
43-24	FPC Fan E Speed
43-25	FPC Fan F Speed
600-**	**PROFIsafe**
600-22	PROFIdrive/safe Tel. Selected
600-44	Fault Message Counter
600-47	Fault Number
600-52	Fault Situation Counter
601-**	**PROFIdrive 2**
601-22	PROFIdrive Safety Channel Tel. No.

5 General Specifications

5.1 Mains Supply

Mains supply (L1-1, L2-1, L3-1, L1-2, L2-2, L3-2)	
Supply voltage	380–500 V ±10%
Supply voltage	525–690 V ±10%

Mains voltage low/mains drop-out:
During low mains voltage or a mains drop-out, the frequency converter continues until the DC-link voltage drops below the minimum stop level, which corresponds typically to 15% below the lowest rated supply voltage. Power-up and full torque cannot be expected at mains voltage lower than 10% below the lowest rated supply voltage.

Supply frequency	50/60 Hz ±5%
Maximum imbalance temporary between mains phases	3.0% of rated supply voltage
True power factor (λ)	≥0.9 nominal at rated load
Displacement power factor (cos ϕ) near unity	(>0.98)
Switching on input supply L1-1, L2-1, L3-1, L1-2, L2-2, L3-2 (power-ups)	Maximum 1 time/2 minutes
Environment according to EN 60664-1	Overvoltage category III/pollution degree 2

The unit is suitable for use on a circuit capable of delivering not more than 100000 RMS symmetrical Amperes, 500/600/690 V maximum.

5.2 Motor Output and Motor Data

Motor output (U, V, W)	
Output voltage	0–100% of supply voltage
Output frequency	0–590 Hz
Switching on output	Unlimited
Ramp times	0.001–3600 s
Torque characteristics	
Starting torque (constant torque)	Maximum 150% for 60 s[1)] once in 10 minutes
Starting/overload torque (variable torque)	Maximum 110% up to 0.5 s[1)] once in 10 minutes
Torque rise time in FLUX (for 5 kHz fsw)	1 ms
Torque rise time in VVC$^+$ (independent of fsw)	10 ms

1) Percentage relates to the nominal torque.
2) The torque response time depends on application and load but as a rule, the torque step from 0 to reference is 4–5 x torque rise time.

5.3 Ambient Conditions

Surroundings	
Enclosure	IP21/Type 1, IP54/Type 12
Vibration test	0.7 g
Maximum relative humidity	5–95% (IEC 721-3-3; Class 3K3 (non-condensing)) during operation
Aggressive environment (IEC 60068-2-43	Class $H_2$5
Ambient temperature (with SFAVM switching mode)	
- with derating	Maximum 55 °C (131 °F)[1)]
- at full continuous frequency converter output current	Maximum 45 °C (113 °F)[1)]

1) For more information on derating, see special conditions in the VLT® AutomationDrive FC 301/FC 302 Design Guide

Minimum ambient temperature during full-scale operation	0 °C (32 °F)
Minimum ambient temperature at reduced performance	-10 °C (14 °F)
Temperature during storage/transport	-25 to +65/70 °C (8.6 to 149/158 °F)
Maximum altitude above sea level without derating	1000 m (3281 ft)

Derating for high altitude, see special conditions in the VLT® AutomationDrive FC 301/FC 302 Design Guide

EMC standards, Emission	EN 61800-3, EN 61000-6-3/4, EN 55011
EMC standards, Immunity	EN 61800-3, EN 61000-6-1/2, EN 61000-4-2, EN 61000-4-3, EN 61000-4-4, EN 61000-4-5, EN 61000-4-6

See section on special conditions in the VLT® AutomationDrive FC 301/FC 302 Design Guide.

5.4 Cable Specifications

Cable lengths and cross-sections	
Maximum motor cable length, shielded/armored	150 m (492 ft)
Maximum motor cable length, unshielded/unarmored	300 m (984 ft)
Maximum cross-section to control terminals, flexible/rigid wire without cable end sleeves	1.5 mm^2/16 AWG
Maximum cross-section to control terminals, flexible wire with cable end sleeves	1 mm^2/18 AWG
Maximum cross-section to control terminals, flexible wire with cable end sleeves with collar	0.5 mm^2/20 AWG
Minimum cross-section to control terminals	0.25 mm^2/24 AWG

5

5.5 Control Input/output and Control Data

Digital inputs	
Programmable digital inputs	4 (6)
Terminal number	18, 19, 27[1)], 29, 32, 33
Logic	PNP or NPN
Voltage level	0–24 V DC
Voltage level, logic 0 PNP	<5 V DC
Voltage level, logic 1 PNP	>10 V DC
Voltage level, logic 0 NPN[2)]	>19 V DC
Voltage level, logic 1 NPN[2)]	<14 V DC
Maximum voltage on input	28 V DC
Pulse frequency range	0–110 kHz
(Duty cycle) Minimum pulse width	4.5 ms
Input resistance, R_i	approximately 4 kΩ

Safe Torque Off terminal 37[3)] (terminal 37 is fixed PNP logic)	
Voltage level	0–24 V DC
Voltage level, logic 0 PNP	<4 V DC
Voltage level, logic 1 PNP	>20 V DC
Nominal input current at 24 V	50 mA rms
Nominal input current at 20 V	60 mA rms
Input capacitance	400 nF

All digital inputs are galvanically isolated from the supply voltage (PELV) and other high voltage terminals.

1) Terminals 27 and 29 can also be programmed as output.

2) Except Safe Torque Off input terminal 37.

3) See chapter 2.3.1 Safe Torque Off (STO) for further information about terminal 37 and STO.

Analog inputs	
Number of analog inputs	2
Terminal number	53, 54
Modes	Voltage or current
Mode select	Switch S201 and switch S202
Voltage mode	Switch S201/switch S202 = OFF (U)
Voltage level	-10 V to +10 V (scaleable)
Input resistance, R_i	approximately 10 kΩ
Maximum voltage	±20 V
Current mode	Switch S201/switch S202 = ON (I)
Current level	0/4 to 20 mA (scaleable)
Input resistance, R_i	approximately 200 Ω
Maximum current	30 mA

Resolution for analog inputs	10 bit (+ sign)
Accuracy of analog inputs	Maximum error 0.5% of full scale
Bandwidth	100 Hz

The analog inputs are galvanically isolated from the supply voltage (PELV) and other high-voltage terminals.

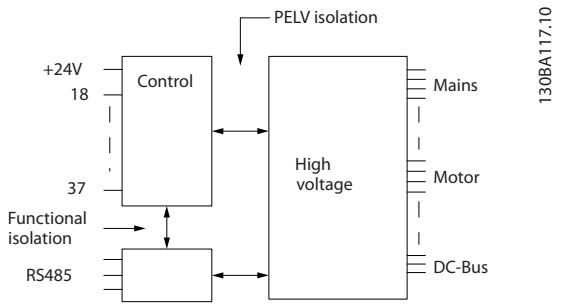

Illustration 5.1 PELV Isolation

Pulse/encoder inputs	
Programmable pulse/encoder inputs	2/1
Terminal number pulse/encoder	29[1], 33[2]/32[3], 33[3]
Maximum frequency at terminal 29, 32, 33	110 kHz (Push-pull driven)
Maximum frequency at terminal 29, 32, 33	5 kHz (Open collector)
Minimum frequency at terminal 29, 32, 33	4 Hz
Voltage level	See section *5-1* Digital Inputs* in the *programming guide*.
Maximum voltage on input	28 V DC
Input resistance, R_i	Approximately 4 kΩ
Pulse input accuracy (0.1–1 kHz)	Maximum error: 0.1% of full scale
Encoder input accuracy (1–11 kHz)	Maximum error: 0.05% of full scale

The pulse and encoder inputs (terminals 29, 32, 33) are galvanically isolated from the supply voltage (PELV) and other high-voltage terminals.
1) FC 302 only.
2) Pulse inputs are 29 and 33.
3) Encoder inputs: 32=A, 33=B.

Digital output	
Programmable digital/pulse outputs	2
Terminal number	27, 29[1]
Voltage level at digital/frequency output	0–24 V
Maximum output current (sink or source)	40 mA
Maximum load at frequency output	1 kΩ
Maximum capacitive load at frequency output	10 nF
Minimum output frequency at frequency output	0 Hz
Maximum output frequency at frequency output	32 kHz
Accuracy of frequency output	Maximum error: 0.1% of full scale
Resolution of frequency outputs	12 bit

1) Terminal 27 and 29 can also be programmed as input.
The digital output is galvanically isolated from the supply voltage (PELV) and other high-voltage terminals.

Analog output	
Number of programmable analog outputs	1
Terminal number	42
Current range at analog output	0/4 to 20 mA
Maximum load GND - analog output less than	500 Ω
Accuracy on analog output	Maximum error: 0.5% of full scale
Resolution on analog output	12 bit

The analog output is galvanically isolated from the supply voltage (PELV) and other high-voltage terminals.

5

Control card, 24 V DC output	
Terminal number	12, 13
Output voltage	24 V +1, -3 V
Maximum load	200 mA

The 24 V DC supply is galvanically isolated from the supply voltage (PELV), but has the same potential as the analog and digital inputs and outputs.

Control card, 10 V DC output	
Terminal number	±50
Output voltage	10.5 V ±0.5 V
Maximum load	15 mA

The 10 V DC supply is galvanically isolated from the supply voltage (PELV) and other high-voltage terminals.

Control card, RS485 serial communication	
Terminal number	68 (P, TX+, RX+), 69 (N, TX-, RX-)
Terminal number 61	Common for terminals 68 and 69

The RS485 serial communication circuit is functionally separated from other central circuits and galvanically isolated from the supply voltage (PELV).

Control card, USB serial communication	
USB standard	1.1 (Full speed)
USB plug	USB type B "device" plug

Connection to PC is carried out via a standard host/device USB cable.
The USB connection is galvanically isolated from the supply voltage (PELV) and other high-voltage terminals.
The USB ground connection is not galvanically isolated from protection earth. Use only an isolated laptop as PC connection to the USB connector on the frequency converter.

Relay outputs	
Programmable relay outputs	2
Relay 01 terminal number	1-3 (break), 1 2 (make)
Maximum terminal load (AC-1)[1)] on 1-3 (NC), 1-2 (NO) (Resistive load)	240 V AC, 2 A
Maximum terminal load (AC-15)[1)] (Inductive load @ cosφ0.4)	240 V AC, 0.2 A
Maximum terminal load (DC-1)[1)] on 1-2 (NO), 1-3 (NC) (Resistive load)	60 V DC, 1 A
Maximum terminal load (DC-13)[1)] (Inductive load)	24 V DC, 0.1 A
Relay 02 (FC 302 only) terminal number	4–6 (break), 4–5 (make)
Maximum terminal load (AC-1)[1)] on 4-5 (NO) (Resistive load)	400 V AC, 2 A
Maximum terminal load (AC-15)[1)] on 4-5 (NO) (Inductive load @ cosφ0.4)	240 V AC, 0.2 A
Maximum terminal load (DC-1)[1)] on 4-5 (NO) (Resistive load)	80 V DC, 2 A
Maximum terminal load (DC-13)[1)] on 4-5 (NO) (Inductive load)	24 V DC, 0.1 A
Maximum terminal load (AC-1)[1)] on 4-6 (NC) (Resistive load)	240 V AC, 2 A
Maximum terminal load (AC-15)[1)] on 4-6 (NC) (Inductive load @ cosφ0.4)	240 V AC, 0.2 A
Maximum terminal load (DC-1)[1)] on 4-6 (NC) (Resistive load)	50 V DC, 2 A
Maximum terminal load (DC-13)[1)] on 4-6 (NC) (Inductive load)	24 V DC, 0.1 A
Minimum terminal load on 1-3 (NC), 1-2 (NO), 4-6 (NC), 4-5 (NO)	24 V DC 10 mA, 24 V AC 20 mA
Environment according to EN 60664-1	Overvoltage category III/pollution degree 2

1) IEC 60947 part 4 and 5
The relay contacts are galvanically isolated from the rest of the circuit by reinforced isolation (PELV).

Control card performance	
Scan interval	1 ms

Control characteristics	
Resolution of output frequency at 0–590 Hz	±0.003 Hz
Repeat accuracy of precise start/stop (terminals 18, 19)	≤±0.1 ms
System response time (terminals 18, 19, 27, 29, 32, 33)	≤2 ms
Speed control range (open loop)	1:100 of synchronous speed
Speed control range (closed loop)	1:1000 of synchronous speed
Speed accuracy (open loop)	30–4000 RPM: error ±8 RPM
Speed accuracy (closed loop), depending on resolution of feedback device	0–6000 RPM: error ±0.15 RPM
Torque control accuracy (speed feedback)	Maximum error ±5% of rated torque

All control characteristics are based on a 4-pole asynchronous motor.

Protection and Features

- Electronic motor thermal protection against overload.
- If the temperature reaches a predefined level, temperature monitoring of the heat sink ensures that the frequency converter trips. An overload temperature cannot be reset until the temperature of the heat sink is below the values stated in the tables in *chapter 5.6 Electrical Data* (Guideline - these temperatures can vary for different power sizes, enclosure sizes, enclosure ratings, and so on).
- The frequency converter is protected against short circuits on motor terminals U, V, W.
- If a mains phase is missing, the frequency converter trips or issues a warning (depending on the load).
- If the DC-link voltage is too low or too high, monitoring of the DC-link voltage ensures that the frequency converter trips.
- The frequency converter constantly checks for critical levels of internal temperature, load current, high voltage on the DC link, and low motor speeds. As a response to a critical level, the frequency converter can adjust the switching frequency and/or change the switching pattern to ensure the performance of the frequency converter.

5.6 Electrical Data

Mains supply 6x380–500 V AC								
FC 302	**P250**		**P315**		**P355**		**P400**	
High/Normal Load[A)] HO/NO	HO	NO	HO	NO	HO	NO	HO	NO
Typical shaft output at 400 V [kW]	250	315	315	355	355	400	400	450
Typical shaft output at 460 V [hp]	350	450	450	500	500	600	550	600
Typical shaft output at 500 V [kW]	315	355	355	400	400	500	500	530
Enclosure protection rating IP21	F8/F9		F8/F9		F8/F9		F8/F9	
Enclosure protection rating IP54	F8/F9		F8/F9		F8/F9		F8/F9	
Output current								
Continuous (at 400 V) [A]	480	600	600	658	658	745	695	800
Intermittent (60 s overload) (at 400 V) [A]	720	660	900	724	987	820	1043	880
Continuous (at 460/500 V) [A]	443	540	540	590	590	678	678	730
Intermittent (60 s overload) (at 460/500 V) [A]	665	594	810	649	885	746	1017	803
Continuous kVA (at 400 V) [kVA]	333	416	416	456	456	516	482	554
Continuous kVA (at 460 V) [kVA]	353	430	430	470	470	540	540	582
Continuous kVA (at 500 V) [kVA]	384	468	468	511	511	587	587	632
Maximum input current								
Continuous (at 400 V) [A]	472	590	590	647	647	733	684	787
Continuous (at 460/500 V) [A]	436	531	531	580	580	667	667	718
Maximum cable size, mains [mm^2 (AWG[2)])]	4x90 (3/0)		4x90 (3/0)		4x240 (500 mcm)		4x240 (500 mcm)	
Maximum cable size, motor [mm^2 (AWG[2)])]	4x240 (4x500 MCM)		4x240 (4x500 MCM)		4x240 (4x500 MCM)		4x240 (4x500 MCM)	
Maximum cable size, brake [mm^2 (AWG[2)])	2x185 (2x350 MCM)		2x185 (2x350 MCM)		2x185 (2x350 MCM)		2x185 (2x350 MCM)	
Maximum external mains fuses [A][1)]	700							
Estimated power loss at 400 V [W][4)]	5164	6790	6960	7701	7691	8879	8178	9670
Estimated power loss at 460 V [W]	4822	6082	6345	6953	6944	8089	8085	8803
Weight,enclosure protection rating IP21, IP54 [kg (lb)]	440/656 (970/1446)							
Efficiency[4)]	0.98							
Output frequency	0–590 Hz							
Heat sink overtemperature trip	95 °C (203 °F)							
Power card ambient trip	75 °C (167 °F)							
A) High overload = 150% torque during 60 s, Normal overload = 110% torque during 60 s								

Table 5.1 Mains Supply 6x380–500 V AC

Mains supply 6x380–500 V AC												
FC 302	**P450**		**P500**		**P560**		**P630**		**P710**		**P800**	
High/Normal Load[A)] HO/NO	HO	NO	HO	NO	HO	NO	HO	NO	HO	NO	HO	NO
Typical shaft output at 400 V [kW]	450	500	500	560	560	630	630	710	710	800	800	1000
Typical shaft output at 460 V [hp]	600	650	650	750	750	900	900	1000	1000	1200	1200	1350
Typical shaft output at 500 V [kW]	530	560	560	630	630	710	710	800	800	1000	1000	1100
Enclosure protection rating IP21, 54 without/with options cabinet	F10/F11		F10/F11		F10/F11		F10/F11		F12/F13		F12/F13	
Output current												
Continuous (at 400 V) [A]	800	880	880	990	990	1120	1120	1260	1260	1460	1460	1720
Intermittent (60 s overload) (at 400 V) [A]	1200	968	1320	1089	1485	1232	1680	1386	1890	1606	2190	1892
Continuous (at 460/500 V) [A]	730	780	780	890	890	1050	1050	1160	1160	1380	1380	1530
Intermittent (60 s overload) (at 460/500 V) [A]	1095	858	1170	979	1335	1155	1575	1276	1740	1518	2070	1683
Continuous kVA (at 400 V) [kVA]	554	610	610	686	686	776	776	873	873	1012	1012	1192
Continuous kVA (at 460 V) [kVA]	582	621	621	709	709	837	837	924	924	1100	1100	1219
Continuous kVA (at 500 V) [kVA]	632	675	675	771	771	909	909	1005	1005	1195	1195	1325
Maximum input current												
Continuous (at 400 V) [A]	779	857	857	964	964	1090	1090	1227	1227	1422	1422	1675
Continuous (at 460/500 V) [A]	711	759	759	867	867	1022	1022	1129	1129	1344	1344	1490
Maximum cable size, motor [mm^2 (AWG[2)])]	8x150 (8x300 MCM)								12x150 (12x300 MCM)			
Maximum cable size, mains [mm^2 (AWG[2)])]	6x120 (6x250 MCM)											
Maximum cable size, brake [mm^2 (AWG[2)])	4x185 (4x350 MCM)								6x185 (6x350 MCM)			
Maximum external mains fuses [A][1)]	900						1500					
Estimated power loss at 400 V [W][4)]	9492	10647	10631	12338	11263	13201	13172	15436	14967	18084	16392	20358
Estimated power loss at 460 V [W]	8730	9414	9398	11006	10063	12353	12332	14041	13819	17137	15577	17752
F9/F11/F13 maximum added losses A1 RFI, CB, or Disconnect, & contactor F9/F11/F13	893	963	951	1054	978	1093	1092	1230	2067	2280	2236	2541
Maximum panel options losses [W]	400											
Weight,enclosure protection rating IP21, IP54 [kg (lb)]	1004/1299 (2213/2864)		1004/1299 (2213/2864)		1004/1299 (2213/2864)		1004/1299 (2213/2864)		1246/1541 (2747/3397)		1246/1541 (2747/3397)	
Weight Rectifier Module [kg (lb)]	102 (225)		102 (225)		102 (225)		102 (225)		136 (300)		136 (300)	
Weight Inverter Module [kg (lb)]	102 (225)		102 (225)		102 (225)		136 (300)		102 (225)		102 (225)	
Efficiency[4)]	0.98											
Output frequency	0–590 Hz											
Heat sink overtemperature trip	95 °C (203 °F)											
Power card ambient trip	75 °C (167 °F)											
A) High overload = 150% torque during 60 s, Normal overload = 110% torque during 60 s												

Table 5.2 Mains Supply 6x380–500 V AC

5

Mains Supply 6x525–690 V AC								
FC 302	**P355**		**P400**		**P500**		**P560**	
High/Normal Load[A)] HO/NO	HO	NO	HO	NO	HO	NO	HO	NO
Typical shaft output at 550 V [kW]	315	355	315	400	400	450	450	500
Typical shaft output at 575 V [hp]	400	450	400	500	500	600	600	650
Typical shaft output at 690 V [kW]	355	450	400	500	500	560	560	630
Enclosure protection rating IP21	F8/F9		F8/F9		F8/F9		F8/F9	
Enclosure protection rating IP54	F8/F9		F8/F9		F8/F9		F8/F9	
Output current								
Continuous (at 550 V) [A]	395	470	429	523	523	596	596	630
Intermittent (60 s overload) (at 550 V) [A]	593	517	644	575	785	656	894	693
Continuous (at 575/690 V) [A]	380	450	410	500	500	570	570	630
Intermittent (60 s overload) (at 575/690 V) [A]	570	495	615	550	750	627	855	693
Continuous kVA (at 550 V) [kVA]	376	448	409	498	498	568	568	600
Continuous kVA (at 575 V) [kVA]	378	448	408	498	498	568	568	627
Continuous kVA (at 690 V) [kVA]	454	538	490	598	598	681	681	753
Maximum input current								
Continuous (at 550 V) [A]	381	453	413	504	504	574	574	607
Continuous (at 575 V) [A]	366	434	395	482	482	549	549	607
Continuous (at 690 V) [A]	366	434	395	482	482	549	549	607
Maximum cable size, mains [mm^2 (AWG)]	4x85 (3/0)							
Maximum cable size, motor [mm^2 (AWG)]	4x250 (500 MCM)							
Maximum cable size, brake [mm^2 (AWG)]	2x185 (2x350 MCM)		2x185 (2x350 MCM)		2x185 (2x350 MCM)		2x185 (2x350 MCM)	
Maximum external mains fuses [A][1)]	630							
Estimated power loss at 600 V [W][4)]	5107	6132	5538	6903	7336	8343	8331	9244
Estimated power loss at 690 V [W][4)]	5383	6449	5818	7249	7671	8727	8715	9673
Weight, Enclosure protection rating IP21, IP54 [kg (lb)]	440/656 (970/1446)							
Efficiency[4)]	0.98							
Output frequency	0–590 Hz							
Heat sink overtemperature trip	85 °C (185 °F)							
Power card ambient trip	75 °C (167 °F)							
A) High overload = 150% torque during 60 s, Normal overload = 110% torque during 60 s								

Table 5.3 Mains Supply 6x525–690 V AC

Mains supply 6x525–690 V AC						
FC 302	**P630**		**P710**		**P800**	
High/Normal Load[A)] HO/NO	HO	NO	HO	NO	HO	NO
Typical shaft output at 550 V [kW]	500	560	560	670	670	750
Typical shaft output at 575 V [hp]	650	750	750	950	950	1050
Typical shaft output at 690 V [kW]	630	710	710	800	800	900
Enclosure protection rating IP21, IP54 without/with options cabinet	F10/F11		F10/F11		F10/F11	
Output current						
Continuous (at 550 V) [A]	659	763	763	889	889	988
Intermittent (60 s overload) (at 550 V) [A]	989	839	1145	978	1334	1087
Continuous (at 575/690 V) [A]	630	730	730	850	850	945
Intermittent (60 s overload) (at 575/690 V) [A]	945	803	1095	935	1275	1040
Continuous kVA (at 550 V) [kVA]	628	727	727	847	847	941
Continuous kVA (at 575 V) [kVA]	627	727	727	847	847	941
Continuous kVA (at 690 V) [kVA]	753	872	872	1016	1016	1129
Maximum input current						
Continuous (at 550 V) [A]	642	743	743	866	866	962
Continuous (at 575 V) [A]	613	711	711	828	828	920
Continuous (at 690 V) [A]	613	711	711	828	828	920
Maximum cable size, motor [mm^2 (AWG[2)])]	8x150 (8x300 MCM)					
Maximum cable size, mains [mm^2 (AWG[2)])]	6x120 (6x250 MCM)					
Maximum cable size, brake [mm^2 (AWG[2)])	4x185 (4x350 MCM)					
Maximum external mains fuses [A][1)]	900					
Estimated power loss at 600 V [W][4)]	9201	10771	10416	12272	12260	13835
Estimated power loss at 690 V [W][4)]	9674	11315	10965	12903	12890	14533
F3/F4 maximum added losses CB or disconnect & contactor	342	427	419	532	519	615
Maximum panel options losses [W]	400					
Weight, enclosure protection rating IP21, IP54 [kg (lb)]	1004/1299 (2213/2864)		1004/1299 (2213/2864)		1004/1299 (2213/2864)	
Weight, rectifier module [kg (lb)]	102 (225)		102 (225)		102 (225)	
Weight, inverter module [kg (lb)]	102 (225)		102 (225)		136 (300)	
Efficiency[4)]	0.98					
Output frequency	0–590 Hz					
Heat sink overtemperature trip	85 °C (185 °F)					
Power card ambient trip	75 °C (167 °F)					
[A)] High overload = 150% torque during 60 s, Normal overload = 110% torque during 60 s						

Table 5.4 Mains Supply 6x525–690 V AC

5

Mains supply 6x525–690 V AC						
FC 302	**P900**		**P1M0**		**P1M2**	
High/Normal Load[A)] HO/NO	HO	NO	HO	NO	HO	NO
Typical shaft output at 550 V [kW]	750	850	850	1000	1000	1100
Typical shaft output at 575 V [hp]	1050	1150	1150	1350	1350	1550
Typical shaft output at 690 V [kW]	900	1000	1000	1200	1200	1400
Enclosure protection rating IP21, IP54 without/with options cabinet	F12/F13		F12/F13		F12/F13	
Output current						
Continuous (at 550 V) [A]	988	1108	1108	1317	1317	1479
Intermittent (60 s overload) (at 550 V) [A]	1482	1219	1662	1449	1976	1627
Continuous (at 575/690 V) [A]	945	1060	1060	1260	1260	1415
Intermittent (60 s overload) (at 575/690 V) [A]	1418	1166	1590	1386	1890	1557
Continuous kVA (at 550 V) [kVA]	941	1056	1056	1255	1255	1409
Continuous kVA (at 575 V) [kVA]	941	1056	1056	1255	1255	1409
Continuous kVA (at 690 V) [kVA]	1129	1267	1267	1506	1506	1691
Maximum input current						
Continuous (at 550 V) [A]	962	1079	1079	1282	1282	1440
Continuous (at 575 V) [A]	920	1032	1032	1227	1227	1378
Continuous (at 690 V) [A]	920	1032	1032	1227	1227	1378
Maximum cable size, motor [mm^2 (AWG[2)])]	12x150 (12x300 MCM)					
Maximum cable size, mains F12 [mm^2 (AWG[2)])]	8x240 (8x500 MCM)					
Maximum cable size, mains F13 [mm^2 (AWG[2)])]	8x400 (8x900 MCM)					
Maximum cable size, brake [mm^2 (AWG[2)])]	6x185 (6x350 MCM)					
Maximum external mains fuses [A][1)]	1600		2000		2500	
Estimated power loss at 600 V [W][4)]	13755	15592	15107	18281	18181	20825
Estimated power loss at 690 V [W][4)]	14457	16375	15899	19207	19105	21857
F3/F4 Maximum added losses CB or disconnect & contactor	556	665	634	863	861	1044
Maximum panel options losses [W]	400					
Weight,enclosure protection rating IP21, IP54 [kg (lb)]	1246/1541 (2747/3397)		1246/1541 (2747/3397)		1280/1575 (2822/3472)	
Weight, rectifier module [kg (lb)]	136 (300)					
Weight, inverter module [kg (lb)]	102 (225)				136 (300)	
Efficiency[4)]	0.98					
Output frequency	0–590 Hz					
Heat sink overtemperature trip	85 °C (185 °F)					
Power card ambient trip	75 °C (167 °F)					
A) High overload = 150% torque during 60 s, Normal overload = 110% torque during 60 s						

Table 5.5 Mains Supply 6x525–690 V AC

Mains supply 6x525–690 V AC						
FC 302	**P1M4**		**P1M6**		**P1M8**	
High/Normal Load[A)] HO/NO	HO	NO	HO	NO	HO	NO
Typical shaft output at 550 V [kW]	1100	1250	1250	1350	1350	1500
Typical shaft output at 575 V [hp]	1550	1700	1700	1900	1900	2050
Typical shaft output at 690 V [kW]	1400	1600	1600	1800	1800	2000
Enclosure protection rating IP21, IP54 without/with options cabinet	F14/F15					
Output current						
Continuous (at 550 V) [A]	1479	1652	1652	1830	1830	2002
Intermittent (60 s overload) (at 550 V) [A]	2219	1817	2478	2013	2745	2202
Continuous (at 575/690 V) [A]	1415	1580	1580	1750	1750	1915
Intermittent (60 s overload) (at 575/690 V) [A]	2122	1738	2370	1925	2625	2107
Continuous kVA (at 550 V) [kVA]	1409	1574	1574	1743	1743	1907
Continuous kVA (at 575 V) [kVA]	1409	1574	1574	1743	1743	1907
Continuous kVA (at 690 V) [kVA]	1691	1888	1888	2091	2091	2289
Maximum input current						
Continuous (at 550 V) [A]	1440	1608	1608	1783	1783	1951
Continuous (at 575 V) [A]	1378	1538	1538	1705	1705	1866
Continuous (at 690 V) [A]	1378	1538	1538	1705	1705	1866
Maximum cable size, motor [mm^2 (AWG[2)])]	12x150 (12x300 MCM)					
Maximum cable size, mains F14 [mm^2 (AWG[2)])]	8x240 (8x500 MCM)					
Maximum cable size, mains F15 [mm^2 (AWG[2)])]	8x400 (8x900 MCM)					
Maximum cable size, brake [mm^2 (AWG[2)])]	6x185 (6x350 MCM)					
Maximum external mains fuses [A][1)]	2500					
Estimated power loss at 600 V [W][4)]	18843	21464	21464	24147	24147	26830
Estimated power loss at 690 V [W][4)]	19191	21831	21831	24560	24560	27289
F3/F4 Maximum added losses CB or disconnect & contactor	1016	1267	1277	1570	1570	1880
Maximum panel options losses [W]	400					
Weight,enclosure protection rating IP21/ IP54 [kg (lb)]	635/756 (1399/1666)		640/762 (1411/1680)		640/762 (1411/1680)	
Weight, rectifier module [kg (lb)]	136 (300)		150 (331)			
Weight, inverter module [kg (lb)]	136 (300)					
Efficiency[4)]	0.98					
Output frequency	0–590 Hz					
Heat sink overtemperature trip	85 °C (185 °F)					
Power card ambient trip	75 °C (167 °F)					
A) High overload = 150% torque during 60 s, Normal overload = 110% torque during 60 s						

Table 5.6 Mains Supply 6x525–690 V AC

1) For type of fuse see chapter 3.4.13 Fuses.

2) American wire gauge.

3) Measured using 5 m (16.4 ft) shielded motor cables at rated load and rated frequency.

4) The typical power loss is at nominal load conditions and expected to be within ±15% (tolerance relates to variety in voltage and cable conditions).
Values are based on a typical motor efficiency. Motors with lower efficiency also add to the power loss in the frequency converter and the opposite way.
If the switching frequency is increased compared to the default setting, the power losses can rise significantly.
LCP and typical control card power consumptions are included. Further extra losses of up to 30 W may be incurred due to extra options and customer load. However, the typical extra losses are only 4 W extra each for a fully loaded control card, or options for slot A or slot B.
Although measurements are made with state of the art equipment, some measurement inaccuracy must be allowed for (±5%).

6 Warnings and Alarms

6.1 Warning and Alarm Types

Warnings
A warning is issued when an alarm condition is impending or when an abnormal operating condition is present and may result in the frequency converter issuing an alarm. A warning clears by itself when the abnormal condition ceases.

Alarms
Trip
An alarm is issued when the frequency converter is tripped, meaning that the frequency converter suspends operation to prevent frequency converter or system damage. The motor coasts to a stop. The frequency converter logic continues to operate and monitor the frequency converter status. After the fault condition is remedied, the frequency converter can be reset. It is then ready to restart operation.

Resetting the frequency converter after trip/trip lock

A trip can be reset in any of 4 ways:
- Press [Reset] on the LCP.
- Digital reset input command.
- Serial communication reset input command.
- Auto reset.

Trip lock
Input power is cycled. The motor coasts to a stop. The frequency converter continues to monitor the frequency converter status. Remove input power to the frequency converter, correct the cause of the fault, and reset the frequency converter.

Warning and alarm displays

- A warning is displayed in the LCP along with the warning number.
- An alarm flashes along with the alarm number.

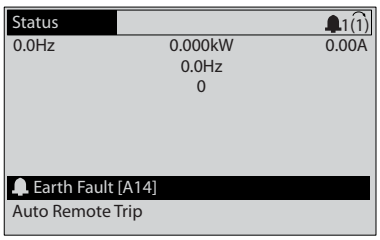

Illustration 6.1 Alarm Display Example

In addition to the text and alarm code in the LCP, there are 3 status indicator lights (LEDs).

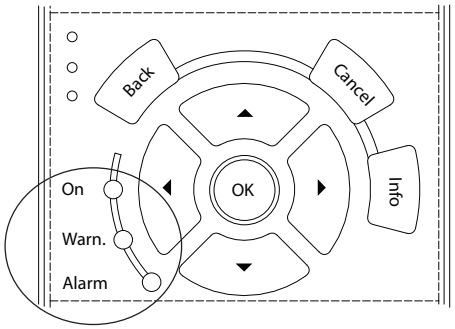

	Warning LED	Alarm LED
Warning	On	Off
Alarm	Off	On (flashing)
Trip lock	On	On (flashing)

Illustration 6.2 Status Indicator Lights (LEDs)

6.2 Warning and Alarm Definitions

The following warning/alarm information defines each warning/alarm condition, provides the probable cause for the condition, and details a remedy or troubleshooting procedure.

⚠WARNING

UNINTENDED START

When the frequency converter is connected to AC mains, DC supply, or load sharing, the motor may start at any time. Unintended start during programming, service, or repair work can result in death, serious injury, or property damage. The motor can start with an external switch, a fieldbus command, an input reference signal from the LCP or LOP, via remote operation using MCT 10 Set-up Software, or after a cleared fault condition.

To prevent unintended motor start:
- **Press [Off/Reset] on the LCP before programming parameters.**
- **Disconnect the frequency converter from the mains.**
- **Completely wire and assemble the frequency converter, motor, and any driven equipment before connecting the frequency converter to AC mains, DC supply, or load sharing.**

WARNING 1, 10 Volts low
The control card voltage is less than 10 V from terminal 50. Remove some of the load from terminal 50, as the 10 V supply is overloaded. Maximum 15 mA or minimum 590 Ω.

A short circuit in a connected potentiometer or incorrect wiring of the potentiometer can cause this condition.

Troubleshooting

- Remove the wiring from terminal 50. If the warning clears, the problem is with the wiring. If the warning does not clear, replace the control card.

WARNING/ALARM 2, Live zero error

This warning or alarm only appears if programmed in *parameter 6-01 Live Zero Timeout Function*. The signal on 1 of the analog inputs is less than 50% of the minimum value programmed for that input. Broken wiring or a faulty device sending the signal can cause this condition.

Troubleshooting

- Check connections on all analog mains terminals.
  - Control card terminals 53 and 54 for signals, terminal 55 common.
  - VLT® General Purpose I/O MCB 101 terminals 11 and 12 for signals, terminal 10 common.
  - VLT® Analog I/O Option MCB 109 terminals 1, 3, and 5 for signals, terminals 2, 4, and 6 common.
- Check that the frequency converter programming and switch settings match the analog signal type.
- Perform an input terminal signal test.

WARNING/ALARM 3, No motor

No motor is connected to the output of the frequency converter.

WARNING/ALARM 4, Mains phase loss

A phase is missing on the supply side, or the mains voltage imbalance is too high. This message also appears for a fault in the input rectifier. Options are programmed in *parameter 14-12 Function at Mains Imbalance*.

Troubleshooting

- Check the supply voltage and supply currents to the frequency converter.

WARNING 5, DC link voltage high

The DC-link voltage (DC) is higher than the high-voltage warning limit. The limit depends on the frequency converter voltage rating. The unit is still active.

WARNING 6, DC link voltage low

The DC-link voltage (DC) is lower than the low voltage warning limit. The limit depends on the frequency converter voltage rating. The unit is still active.

WARNING/ALARM 7, DC overvoltage

If the DC-link voltage exceeds the limit, the frequency converter trips after a certain time.

Troubleshooting

- Connect a brake resistor.
- Extend the ramp time.
- Change the ramp type.
- Activate the functions in *parameter 2-10 Brake Function*.
- Increase *parameter 14-26 Trip Delay at Inverter Fault*.
- If the alarm/warning occurs during a power sag, use kinetic back-up (*parameter 14-10 Mains Failure*).

WARNING/ALARM 8, DC under voltage

If the DC-link voltage drops below the undervoltage limit, the frequency converter checks for 24 V DC back-up supply. If no 24 V DC back-up supply is connected, the frequency converter trips after a fixed time delay. The time delay varies with unit size.

Troubleshooting

- Check that the supply voltage matches the frequency converter voltage.
- Perform an input voltage test.
- Perform a soft-charge circuit test.

WARNING/ALARM 9, Inverter overload

The frequency converter has run with more than 100% overload for too long and is about to cut out. The counter for electronic thermal inverter protection issues a warning at 98% and trips at 100% with an alarm. The frequency converter cannot be reset until the counter is below 90%.

Troubleshooting

- Compare the output current shown on the LCP with the frequency converter rated current.
- Compare the output current shown on the LCP with the measured motor current.
- Show the thermal frequency converter load on the LCP and monitor the value. When running above the frequency converter continuous current rating, the counter increases. When running below the frequency converter continuous current rating, the counter decreases.

WARNING/ALARM 10, Motor overload temperature

According to the electronic thermal protection (ETR), the motor is too hot. Select whether the frequency converter issues a warning or an alarm when the counter is >90% if *parameter 1-90 Motor Thermal Protection* is set to warning options, or whether the frequency converter trips when the counter reaches 100% if *parameter 1-90 Motor Thermal Protection* is set to trip options. The fault occurs when the motor runs with more than 100% overload for too long.

Troubleshooting

- Check for motor overheating.
- Check if the motor is mechanically overloaded.
- Check that the motor current set in *parameter 1-24 Motor Current* is correct.

- Ensure that the motor data in *parameters 1-20* to *1-25* are set correctly.
- If an external fan is in use, check that it is selected in *parameter 1-91 Motor External Fan*.
- Running AMA in *parameter 1-29 Automatic Motor Adaptation (AMA)* tunes the frequency converter to the motor more accurately and reduces thermal loading.

WARNING/ALARM 11, Motor thermistor overtemp
The thermistor may be disconnected. Select whether the frequency converter issues a warning or an alarm in *parameter 1-90 Motor Thermal Protection*.

Troubleshooting
- Check for motor overheating.
- Check if the motor is mechanically overloaded.
- Check that the thermistor is connected correctly between either terminal 53 or 54 (analog voltage input) and terminal 50 (+10 V supply). Also check that the terminal switch for 53 or 54 is set for voltage. Check that *parameter 1-93 Thermistor Resource* is set to terminal 53 or 54.
- When using digital inputs 18 or 19, check that the thermistor is connected correctly between either terminal 18 or 19 (digital input PNP only) and terminal 50.
- If a KTY Sensor is used, check for correct connection between terminals 54 and 55.
- If using a thermal switch or thermistor, check that the programming of *parameter 1-93 Thermistor Resource* matches sensor wiring.
- If using a KTY Sensor, check the programming of *parameter 1-95 KTY Sensor Type*, *parameter 1-96 KTY Thermistor Resource*, and *parameter 1-97 KTY Threshold level* match sensor wiring.

WARNING/ALARM 12, Torque limit
The torque has exceeded the value in *parameter 4-16 Torque Limit Motor Mode* or the value in *parameter 4-17 Torque Limit Generator Mode*. *Parameter 14-25 Trip Delay at Torque Limit* can change this warning from a warning-only condition to a warning followed by an alarm.

Troubleshooting
- If the motor torque limit is exceeded during ramp-up, extend the ramp-up time.
- If the generator torque limit is exceeded during ramp-down, extend the ramp-down time.
- If torque limit occurs while running, increase the torque limit. Make sure that the system can operate safely at a higher torque.
- Check the application for excessive current draw on the motor.

WARNING/ALARM 13, Over current
The inverter peak current limit (approximately 200% of the rated current) is exceeded. The warning lasts approximately 1.5 s, then the frequency converter trips and issues an alarm. Shock loading or quick acceleration with high-inertia loads can cause this fault. If the acceleration during ramp-up is quick, the fault can also appear after kinetic back-up. If extended mechanical brake control is selected, a trip can be reset externally.

Troubleshooting
- Remove the power and check if the motor shaft can be turned.
- Check that the motor size matches the frequency converter.
- Check that the motor data is correct in *parameters 1-20* to *1-25*.

ALARM 14, Earth (ground) fault
There is current from the output phases to ground, either in the cable between the frequency converter and the motor, or in the motor itself.

Troubleshooting
- Remove the power to the frequency converter and repair the ground fault.
- Check for ground faults in the motor by measuring the resistance to the ground of the motor cables and the motor with a megohmmeter.
- Perform a current sensor test.

ALARM 15, Hardware mismatch
A fitted option is not operational with the present control board hardware or software.

Record the value of the following parameters and contact Danfoss:
- *Parameter 15-40 FC Type*.
- *Parameter 15-41 Power Section*.
- *Parameter 15-42 Voltage*.
- *Parameter 15-43 Software Version*.
- *Parameter 15-45 Actual Typecode String*.
- *Parameter 15-49 SW ID Control Card*.
- *Parameter 15-50 SW ID Power Card*.
- *Parameter 15-60 Option Mounted*.
- *Parameter 15-61 Option SW Version* (for each option slot).

ALARM 16, Short circuit
There is short-circuiting in the motor or motor wiring.

Troubleshooting
- Remove the power to the frequency converter and repair the short circuit.

⚠WARNING

HIGH VOLTAGE

Frequency converters contain high voltage when connected to AC mains input, DC supply, or load sharing. Failure to perform installation, start-up, and maintenance by qualified personnel can result in death or serious injury.

- **Disconnect power before proceeding.**

WARNING/ALARM 17, Control word timeout

There is no communication with the frequency converter. The warning is only active when *parameter 8-04 Control Word Timeout Function* is not set to *[0] Off*.
If *parameter 8-04 Control Word Timeout Function* is set to *[2] Stop* and *[26] Trip*, a warning appears and the frequency converter ramps down until it trips and then shows an alarm.

Troubleshooting

- Check the connections on the serial communication cable.
- Increase *parameter 8-03 Control Word Timeout Time*.
- Check the operation of the communication equipment.
- Verify a proper installation based on EMC requirements.

WARNING/ALARM 22, Hoist mechanical brake

The value of this warning/alarm shows the type of warning/alarm.
0 = The torque reference was not reached before timeout (*parameter 2-27 Torque Ramp Up Time*).
1 = Expected brake feedback not received before timeout (*parameter 2-23 Activate Brake Delay*, *parameter 2-25 Brake Release Time*).

WARNING 23, Internal fan fault

The fan warning function is an extra protective function that checks if the fan is running/mounted. The fan warning can be disabled in *parameter 14-53 Fan Monitor ([0] Disabled)*.

Troubleshooting

- Check the fan resistance.
- Check the soft charge fuses.

WARNING 24, External fan fault

The fan warning function is an extra protective function that checks if the fan is running/mounted. The fan warning can be disabled in *parameter 14-53 Fan Monitor ([0] Disabled)*.

Troubleshooting

- Check the fan resistance.
- Check the soft charge fuses.

WARNING 25, Brake resistor short circuit

The brake resistor is monitored during operation. If a short circuit occurs, the brake function is disabled and the warning appears. The frequency converter is still operational, but without the brake function.

Troubleshooting

- Remove the power to the frequency converter and replace the brake resistor (refer to *parameter 2-15 Brake Check*).

WARNING/ALARM 26, Brake resistor power limit

The power transmitted to the brake resistor is calculated as a mean value over the last 120 s of run time. The calculation is based on the DC-link voltage and the brake resistor value set in *parameter 2-16 AC brake Max. Current*. The warning is active when the dissipated braking is >90% of the brake resistor power. If *[2] Trip* is selected in *parameter 2-13 Brake Power Monitoring*, the frequency converter trips when the dissipated braking power reaches 100%.

⚠WARNING

HIGH VOLTAGE ON THE BRAKE RESISTOR

If the brake transistor is short-circuited, there is a risk of substantial power being transmitted to the brake resistor.

- **Find and fix the reason for exceeding the power limit.**

WARNING/ALARM 27, Brake chopper fault

The brake IGBT is monitored during operation. If a short circuit occurs, the brake function is disabled and a warning is issued. The frequency converter is still operational, but since the brake IGBT has short-circuited, substantial power is transmitted to the brake resistor, even if it is inactive. Remove the power to the frequency converter and remove the brake resistor.

This warning/alarm could also occur if the brake resistor overheats. Terminals 104 and 106 are available as brake resistors Klixon inputs.

The 12-pulse frequency converter may generate this warning/alarm when one of the disconnects or circuit breakers is opened while the unit is on.

WARNING/ALARM 28, Brake check failed

The brake resistor is not connected or not working.

Troubleshooting

- Check *parameter 2-15 Brake Check*.

ALARM 29, Heat Sink temp

The maximum temperature of the heat sink has been exceeded. The temperature fault resets when the temperature falls below a defined heat sink temperature. The trip and reset points vary based on the frequency converter power size.

Troubleshooting

Check for the following conditions:

- Ambient temperature too high.
- Motor cables too long.
- Incorrect airflow clearance above and below the frequency converter.
- Blocked airflow around the frequency converter.
- Damaged heat sink fan.
- Dirty heat sink.

For D, E, and F enclosures, this alarm is based on the temperature measured by the heat sink sensor mounted inside the IGBT modules. For the F enclosures, the thermal sensor in the rectifier module can also cause this alarm.

Troubleshooting

- Check the fan resistance.
- Check the soft charge fuses.
- Check the IGBT thermal sensor.

ALARM 30, Motor phase U missing

Motor phase U between the frequency converter and the motor is missing.

⚠WARNING

HIGH VOLTAGE

Frequency converters contain high voltage when connected to AC mains input, DC supply, or load sharing. Failure to perform installation, start-up, and maintenance by qualified personnel can result in death or serious injury.

- **Disconnect power before proceeding.**

Troubleshooting

- Remove the power from the frequency converter and check motor phase U.

ALARM 31, Motor phase V missing

Motor phase V between the frequency converter and the motor is missing.

⚠WARNING

HIGH VOLTAGE

Frequency converters contain high voltage when connected to AC mains input, DC supply, or load sharing. Failure to perform installation, start-up, and maintenance by qualified personnel can result in death or serious injury.

- **Disconnect power before proceeding.**

Troubleshooting

- Remove the power from the frequency converter and check motor phase V.

ALARM 32, Motor phase W missing

Motor phase W between the frequency converter and the motor is missing.

⚠WARNING

HIGH VOLTAGE

Frequency converters contain high voltage when connected to AC mains input, DC supply, or load sharing. Failure to perform installation, start-up, and maintenance by qualified personnel can result in death or serious injury.

- **Disconnect power before proceeding.**

Troubleshooting

- Remove the power from the frequency converter and check motor phase W.

ALARM 33, Inrush fault

Too many power-ups have occurred within a short time period.

Troubleshooting

- Let the unit cool to operating temperature.

WARNING/ALARM 34, Fieldbus communication fault

The fieldbus on the communication option card is not working.

WARNING/ALARM 36, Mains failure

This warning/alarm is only active if the supply voltage to the frequency converter is lost and *parameter 14-10 Mains Failure* is not set to *[0] No Function*.

Troubleshooting

- Check the fuses to the frequency converter and mains supply to the unit.

ALARM 38, Internal fault

When an internal fault occurs, a code number defined in *Table 6.1* is shown.

Troubleshooting

- Cycle the power.
- Check that the option is properly installed.
- Check for loose or missing wiring.

It may be necessary to contact Danfoss Service or the supplier. Note the code number for further troubleshooting directions.

Number	Text
0	The serial port cannot be initialized. Contact the Danfoss supplier or Danfoss Service.
256–258	The power EEPROM data is defective or too old.
512	The control board EEPROM data is defective or too old.
513	Communication timeout reading EEPROM data.
514	Communication timeout reading EEPROM data.
515	Application-oriented control cannot recognize the EEPROM data.

Number	Text
516	Cannot write to the EEPROM because a write command is in progress.
517	The write command is under timeout.
518	Failure in the EEPROM.
519	Missing or invalid barcode data in EEPROM.
783	Parameter value outside of minimum/maximum limits.
1024–1279	A CAN telegram could not be sent.
1281	Digital signal processor flash timeout.
1282	Power micro software version mismatch.
1283	Power EEPROM data version mismatch.
1284	Cannot read digital signal processor software version.
1299	The option software in slot A is too old.
1300	The option software in slot B is too old.
1301	The option software in slot C0 is too old.
1302	The option software in slot C1 is too old.
1315	The option software in slot A is not supported (not allowed).
1316	The option software in slot B is not supported (not allowed).
1317	The option software in slot C0 is not supported (not allowed).
1318	The option software in slot C1 is not supported (not allowed).
1379	Option A did not respond when calculating the platform version.
1380	Option B did not respond when calculating the platform version.
1381	Option C0 did not respond when calculating the platform version.
1382	Option C1 did not respond when calculating the platform version.
1536	An exception in the application-oriented control is registered. The debug information is written on the LCP.
1792	DSP watchdog is active. Debugging of power part data, motor-oriented control data not transferred correctly.
2049	Power data restarted.
2064–2072	H081x: Option in slot x has restarted.
2080–2088	H082x: Option in slot x has issued a power-up wait.
2096–2104	H983x: Option in slot x has issued a legal power-up wait.
2304	Could not read any data from the power EEPROM.
2305	Missing software version from the power unit.
2314	Missing power unit data from the power unit.
2315	Missing software version from the power unit.
2316	Missing lo_statepage from the power unit.
2324	The power card configuration is determined to be incorrect at power-up.
2325	A power card has stopped communicating while mains power is applied.
2326	The power card configuration is determined to be incorrect after the delay for power cards to register.
2327	Too many power card locations have been registered as present.
2330	The power size information between the power cards does not match.
2561	No communication from DSP to ATACD.
2562	No communication from ATACD to DSP (state running).
2816	Stack overflow control board module.
2817	Scheduler slow tasks.
2818	Fast tasks.
2819	Parameter thread.
2820	LCP stack overflow.
2821	Serial port overflow.
2822	USB port overflow.
2836	cfListMempool is too small.
3072–5122	The parameter value is outside its limits.
5123	Option in slot A: Hardware incompatible with the control board hardware.
5124	Option in slot B: Hardware incompatible with the control board hardware.
5125	Option in slot C0: Hardware incompatible with the control board hardware.
5126	Option in slot C1: Hardware incompatible with the control board hardware.
5376–6231	Out of memory.

Table 6.1 Internal Fault, Code Numbers

ALARM 39, Heat sink sensor
No feedback from the heat sink temperature sensor.

The signal from the IGBT thermal sensor is not available on the power card. The problem could be on the power card, on the gatedrive card, or the ribbon cable between the power card and gatedrive card.

WARNING 40, Overload of digital output terminal 27
Check the load connected to terminal 27 or remove the short circuit connection. Check *parameter 5-00 Digital I/O Mode* and *parameter 5-01 Terminal 27 Mode*.

WARNING 41, Overload of digital output terminal 29
Check the load connected to terminal 29 or remove the short circuit connection. Also check *parameter 5-00 Digital I/O Mode* and *parameter 5-02 Terminal 29 Mode*.

WARNING 42, Overload of digital output on X30/6 or overload of digital output on X30/7
For terminal X30/6, check the load connected to terminal X30/6 or remove the short circuit connection. Also check *parameter 5-32 Term X30/6 Digi Out (MCB 101)* (VLT® General Purpose I/O MCB 101).

For terminal X30/7, check the load connected to terminal X30/7 or remove the short circuit connection. Check

parameter 5-33 Term X30/7 Digi Out (MCB 101) (VLT® General Purpose I/O MCB 101).

ALARM 45, Earth fault 2
Ground fault.

Troubleshooting
- Check for proper grounding and loose connections.
- Check for proper wire size.
- Check the motor cables for short circuits or leakage currents.

ALARM 46, Power card supply
The supply on the power card is out of range.

There are 3 supplies generated by the switch mode power supply (SMPS) on the power card: 24 V, 5 V, and ±18 V. When powered with 24 V DC with the VLT® 24 V DC Supply Option MCB 107, only the 24 V and 5 V supplies are monitored. When powered with 3-phase mains voltage, all 3 supplies are monitored.

WARNING 47, 24 V supply low
The supply on the power card is out of range.

There are 3 supplies generated by the switch mode supply (SMPS) on the power card:
- 24 V.
- 5 V.
- ±18 V.

Troubleshooting
- Check for a defective power card.

WARNING 48, 1.8 V supply low
The 1.8 V DC supply used on the control card is outside of the allowable limits. The supply is measured on the control card.

Troubleshooting
- Check for a defective control card.
- If an option card is present, check for overvoltage.

WARNING 49, Speed limit
The warning is shown when the speed is outside of the specified range in *parameter 4-11 Motor Speed Low Limit [RPM]* and *parameter 4-13 Motor Speed High Limit [RPM]*. When the speed is below the specified limit in *parameter 1-86 Trip Speed Low [RPM]* (except when starting or stopping), the frequency converter trips.

ALARM 50, AMA calibration failed
Contact the Danfoss supplier or Danfoss service department.

ALARM 51, AMA check U_{nom} and I_{nom}
The settings for motor voltage, motor current, and motor power are wrong.

Troubleshooting
- Check the settings in *parameters 1-20* to *1-25*.

ALARM 52, AMA low I_{nom}
The motor current is too low.

Troubleshooting
- Check the settings in *parameter 1-24 Motor Current*.

ALARM 53, AMA motor too big
The motor is too large for the AMA to operate.

ALARM 54, AMA motor too small
The motor is too small for the AMA to operate.

ALARM 55, AMA parameter out of range
AMA cannot run because the parameter values of the motor are outside of the acceptable range.

ALARM 56, AMA interrupted by user
The AMA is manually interrupted.

ALARM 57, AMA internal fault
Continue to restart the AMA, until the AMA is carried out.

NOTICE

Repeated runs may heat the motor to a level where the resistance R_s and R_r are increased. Usually, however, this behavior is not critical.

ALARM 58, AMA Internal fault
Contact the Danfoss supplier.

WARNING 59, Current limit
The current is higher than the value in *parameter 4-18 Current Limit*. Ensure that motor data in *parameters 1-20* to *1-25* is set correctly. Increase the current limit if necessary. Ensure that the system can operate safely at a higher limit.

WARNING 60, External interlock
External interlock has been activated. To resume normal operation, apply 24 V DC to the terminal programmed for external interlock and reset the frequency converter (via serial communication, digital I/O, or by pressing [Reset]).

WARNING/ALARM 61, Feedback error
An error has occurred between the calculated motor speed and the speed measurement from the feedback device. The function warning/alarm/disable is set in *parameter 4-30 Motor Feedback Loss Function*. Accepted error setting in *parameter 4-31 Motor Feedback Speed Error* and the allowed time the error occur setting in *parameter 4-32 Motor Feedback Loss Timeout*. During a commissioning procedure, the function could be effective.

WARNING 62, Output frequency at maximum limit
The output frequency is higher than the value set in *parameter 4-19 Max Output Frequency*.

ALARM 63, Mechanical brake low
The actual motor current has not exceeded the release brake current within the start delay time window.

WARNING 64, Voltage Limit
The load and speed combination demands a motor voltage higher than the actual DC-link voltage.

WARNING/ALARM 65, Control card over temperature
The cut-out temperature of the control card is 85 °C (185 °F).

Troubleshooting

- Check that the ambient operating temperature is within the limits.
- Check for clogged filters.
- Check the fan operation.
- Check the control card.

WARNING 66, Heat sink temperature low
The frequency converter is too cold to operate. This warning is based on the temperature sensor in the IGBT module.
Increase the ambient temperature of the unit. Also, a trickle amount of current can be supplied to the frequency converter whenever the motor is stopped by setting *parameter 2-00 DC Hold/Preheat Current* at 5% and *parameter 1-80 Function at Stop*.

Troubleshooting
The heat sink temperature measured as 0 °C (32 °F) could indicate that the temperature sensor is defective, causing the fan speed to increase to the maximum. This warning results if the sensor wire between the IGBT and the gatedrive card is disconnected. Also, check the IGBT thermal sensor.

ALARM 67, Option module configuration has changed
One or more options have either been added or removed since the last power-down. Check that the configuration change is intentional and reset the unit.

ALARM 68, Safe Stop activated
STO has been activated. To resume normal operation, apply 24 V DC to terminal 37, then send a reset signal (via bus, digital I/O, or by pressing [Reset].

ALARM 69, Power card temperature
The temperature sensor on the power card is either too hot or too cold.

Troubleshooting

- Check the operation of the door fans.
- Check that the filters for the door fans are not blocked.
- Check that the gland plate is properly installed on IP21/IP54 (NEMA 1/12) frequency converters.

ALARM 70, Illegal FC configuration
The control card and power card are incompatible. To check compatibility, contact the Danfoss supplier with the type code from the unit nameplate and the part numbers of the cards.

ALARM 71, PTC 1 safe stop
STO has been activated from the VLT® PTC Thermistor Card MCB 112 (motor too warm). Normal operation can resume when the MCB 112 applies 24 V DC to terminal 37 (when the motor temperature is acceptable) and when the digital input from the MCB 112 is deactivated. When that happens, a reset signal is sent (via bus, digital I/O, or by pressing [Reset]).

NOTICE

If automatic restart is enabled, the motor could start when the fault is cleared.

ALARM 72, Dangerous failure
STO with trip lock. Unexpected signal levels on Safe Torque Off and digital input from the VLT® PTC Thermistor Card MCB 112.

WARNING 73, Safe Stop auto restart
STO activated. With automatic restart enabled, the motor can start when the fault is cleared.

WARNING 76, Power unit setup
The required number of power units does not match the detected number of active power units.

This warning occurs when replacing a module for an F-size enclosure if the power-specific data in the module power card does not match the rest of the frequency converter.

Troubleshooting

- Confirm that the spare part and its power card are the correct part number.

WARNING 77, Reduced power mode
The frequency converter is operating in reduced power mode (less than the allowed number of inverter sections). This warning is generated on power cycle when the frequency converter is set to run with fewer inverters and remains on.

ALARM 79, Illegal power section configuration
The scaling card has an incorrect part number or is not installed. The MK102 connector on the power card could not be installed.

ALARM 80, Drive initialised to default value
Parameter settings are initialized to default settings after a manual reset. To clear the alarm, reset the unit.

ALARM 81, CSIV corrupt
CSIV file has syntax errors.

ALARM 82, CSIV parameter error
CSIV failed to initialize a parameter.

ALARM 85, Dang fail PB
PROFIBUS/PROFIsafe error.

WARNING/ALARM 104, Mixing fan fault
The fan is not operating. The fan monitor checks that the fan is spinning at power-up or whenever the mixing fan is turned on. The mixing-fan fault can be configured as a warning or an alarm trip in *parameter 14-53 Fan Monitor*.

Troubleshooting

- Cycle power to the frequency converter to determine if the warning/alarm returns.

ALARM 243, Brake IGBT
This alarm is only for enclosure size F frequency converters. It is equivalent to *WARNING/ALARM 27, Brake chopper fault*. The report number does not describe the module which has the failed brake IGBT. The open Klixon can be identified in the report number.

The report value in the alarm log indicates which power module generated the alarm:

1 = Left most inverter module.

2 = Middle inverter module in enclosure sizes F12 or F13.

2 = Right inverter module in enclosure sizes F10 or F11.

2 = Second frequency converter from the left inverter module in enclosure size F14.

3 = Right inverter module in enclosure sizes F12 or F13.

3 = Third from the left inverter module in enclosure size F14 or F15.

4 = Far right inverter module in enclosure size F14.

5 = Rectifier module.

6 = Right rectifier module in enclosure size F14 or F15.

ALARM 244, Heat Sink temperature
This alarm is only for enclosure type F frequency converters. It is equivalent to *ALARM 29, Heat Sink temp*.

The report value in the alarm log indicates which power module generated the alarm:

1 = Left most inverter module.

2 = Middle inverter module in enclosure size F12 or F13.

2 = Right inverter module in enclosure size F10 or F11.

2 = Second frequency converter from the left inverter module in enclosure size F14 or F15.

3 = Right inverter module in enclosure sizes F12 or F13.

3 = Third from the left inverter module in enclosure size F14 or F15.

4 = Far right inverter module in enclosure sizes F14 or F15.

5 = Rectifier module.

6 = Right rectifier module in enclosure sizes F14 or F15.

ALARM 245, Heat Sink sensor
This alarm is only for enclosure size F frequency converters. It is equivalent to *ALARM 39, Heat sink sensor*.

The report value in the alarm log indicates which power module generated the alarm:

1 = Left most inverter module.

2 = Middle inverter module in enclosure sizes F12 or F13.

2 = Right inverter module in enclosure sizes F10 or F11.

2 = Second frequency converter from the left inverter module in enclosure size F14 or F15.

3 = Right inverter module in enclosure sizes F12 or F13.

3 = Third from the left inverter module in enclosure size F14 or F15.

4 = Far right inverter module in enclosure size F14 or F15.

5 = Rectifier module.

6 = Right rectifier module in enclosure size F14 or F15.

The 12-pulse frequency converter may generate this warning/alarm when 1 of the disconnects or circuit breakers is opened while the unit is on.

ALARM 246, Power card supply
This alarm is only for enclosure size F frequency converters. It is equivalent to *ALARM 46, Power card supply*.

The report value in the alarm log indicates which power module generated the alarm:

1 = Left most inverter module.

2 = Middle inverter module in enclosure sizes F12 or F13.

2 = Right inverter module in enclosure sizes F10 or F11.

2 = Second frequency converter from the left inverter module in enclosure size F14 or F15.

3 = Right inverter module in enclosure sizes F12 or F13.

3 = Third from the left inverter module in enclosure size F14 or F15.

4 = Far right inverter module in enclosure size F14 or F15.

5 = Rectifier module.

6 = Right rectifier module in enclosure size F14 or F15.

ALARM 247, Power card temperature
This alarm is only for enclosure size F frequency converters. It is equivalent to *ALARM 69, Power card temperature*.

The report value in the alarm log indicates which power module generated the alarm:

1 = Left most inverter module.

2 = Middle inverter module in enclosure sizes F12 or F13.

2 = Right inverter module in enclosure sizes F10 or F11.

2 = Second frequency converter from the left inverter module in enclosure size F14 or F15.

3 = Right inverter module in enclosure sizes F12 or F13.

3 = Third from the left inverter module in enclosure size F14 or F15.

4 = Far right inverter module in enclosure size F14 or F15.

5 = Rectifier module.

6 = Right rectifier module in enclosure size F14 or F15.

ALARM 248, Illegal power section configuration
This alarm is only for enclosure size F frequency converters. It is equivalent to *ALARM 79, Illegal power section configuration*.

The report value in the alarm log indicates which power module generated the alarm:

1 = Left most inverter module.

2 = Middle inverter module in enclosure sizes F12 or F13.

2 = Right inverter module in enclosure sizes F10 or F11.

2 = Second frequency converter from the left inverter module in enclosure size F14 or F15.

3 = Right inverter module in enclosure sizes F12 or F13.

3 = Third from the left inverter module in enclosure sizes F14 or F15.

4 = Far right inverter module in enclosure sizes F14 or F15.

5 = Rectifier module.

6 = Right rectifier module in enclosure size F14 or F15.

WARNING 250, New spare part
The power or switch mode supply has been exchanged. Restore the frequency converter type code in the EEPROM. Select the correct type code in *parameter 14-23 Typecode Setting* according to the label on the frequency converter. Remember to select Save to EEPROM at the end.

WARNING 251, New typecode
The power card or other components are replaced, and the type code has changed.

Index

H

I

L

M

N

O

P

Q

R

S

T

U

V

W

Danfoss A/S
Ulsnaes 1
DK-6300 Graasten
vlt-drives.danfoss.com

130R0217 MG34Q402 04/2016