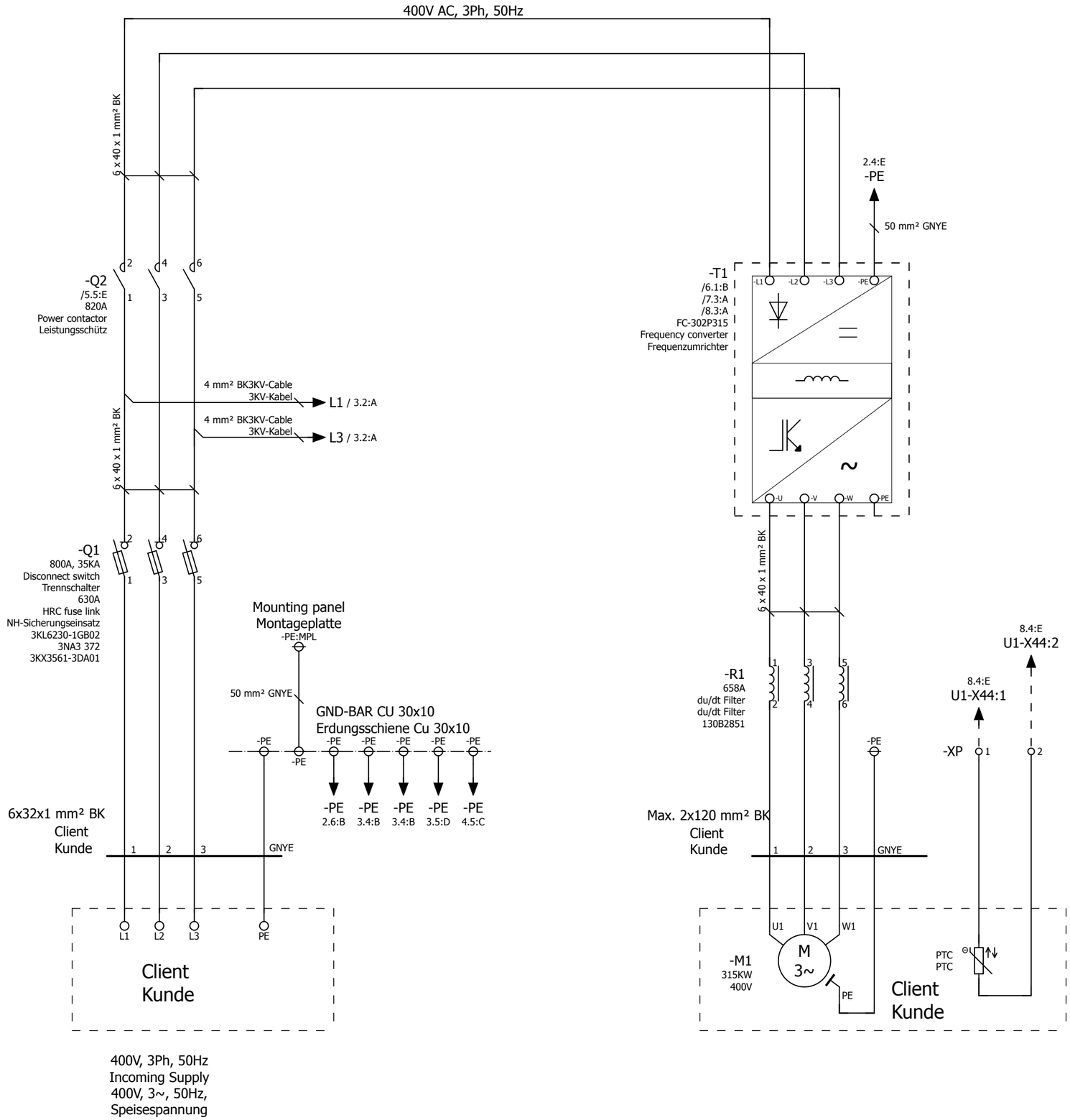


1

3

| | | | | | | | | | | | |
|---|---|---|---|---|---|---|---|---|---|---|---|
| | | | Date | 9/30/2013 | Commission<br>315KW VFD Panel<br>Project description<br>Contactor+Disconnect+Fuse+dudt Filter<br>Schütz+Trennschalter+Sicherung+dudt Filter | Danfoss GmbH<br>VLT Drives EMA,Carl-Legien Strasse 8<br>63073 Offenbach, Germany | Danfoss | FILE-NAME:<br>LOGOB300.jpg<br>Size 300px x 116px | Page description<br>Schematic multi-line<br>Schaltplan allpolig | Project Number<br>---- | = FC302<br>+ P315KW 230V | Page<br>2 |
| | | | Ed. | ---- | | | | | | SAP NO | Manufacturer no | |
| | | | Appr | ---- | | | | | | | | |
| Modification | Date | Name | Contr. | ---- | | | | | | | | Page 34 |