175U2306 Thermostat kit for Danfoss brake resistor

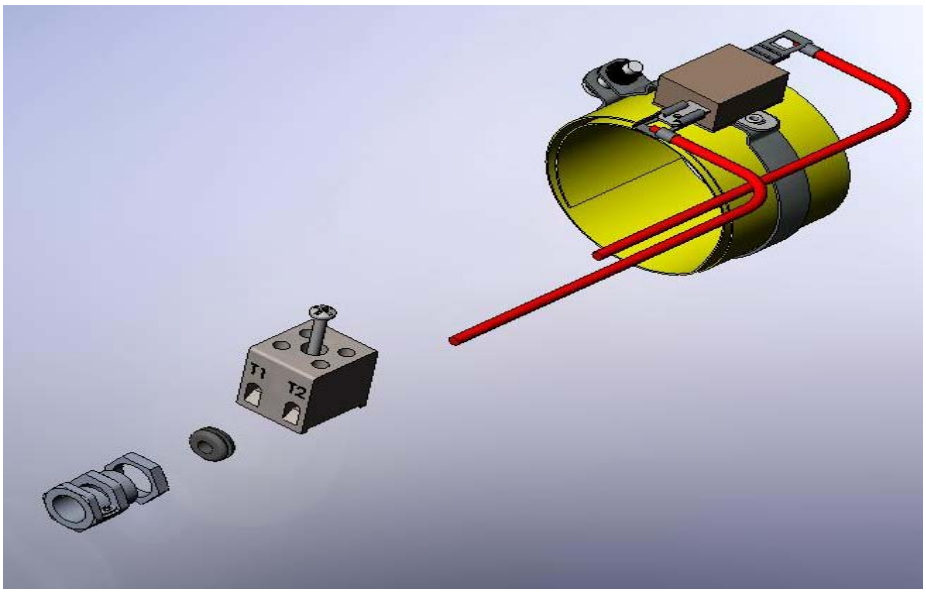

1.

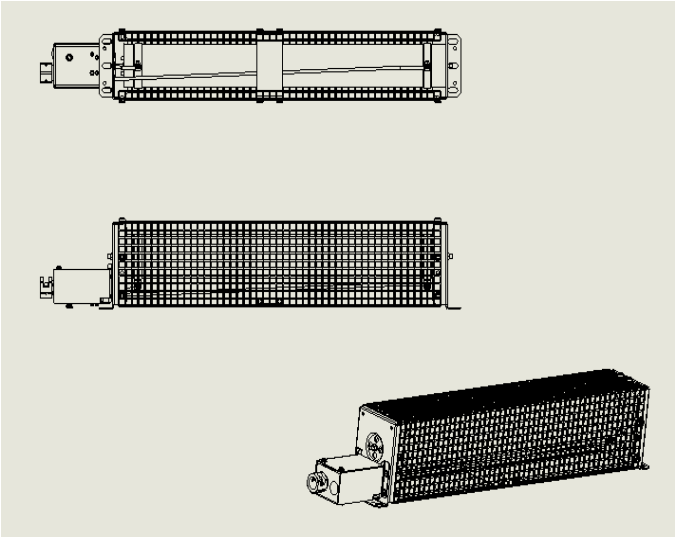

2.

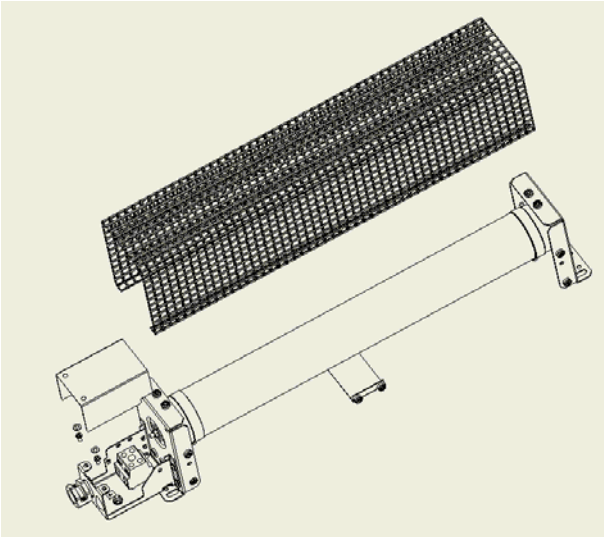

3.

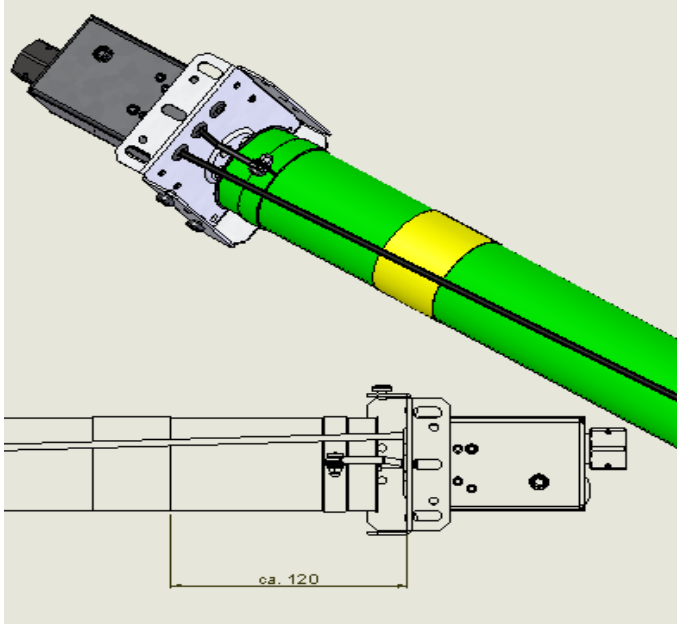

4.

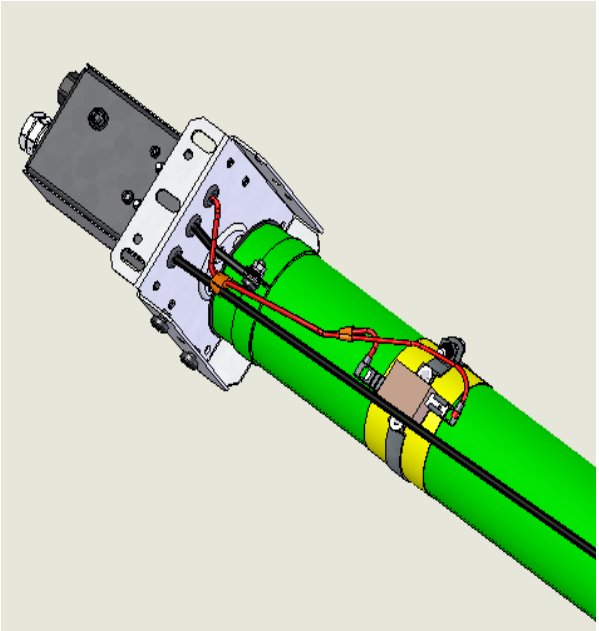

175U2306 Thermostat kit for Danfoss brake resistor

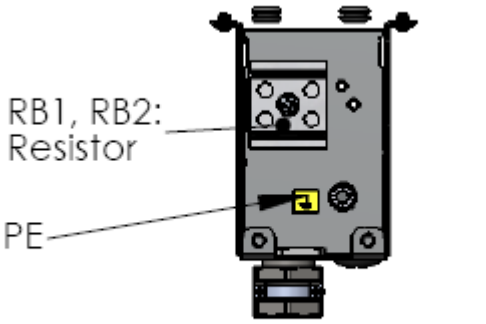

Cable connection

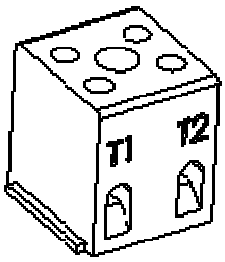

Strip: 8 mm. +-1
Tightening torque: 0.6 – 0.8 Nm.

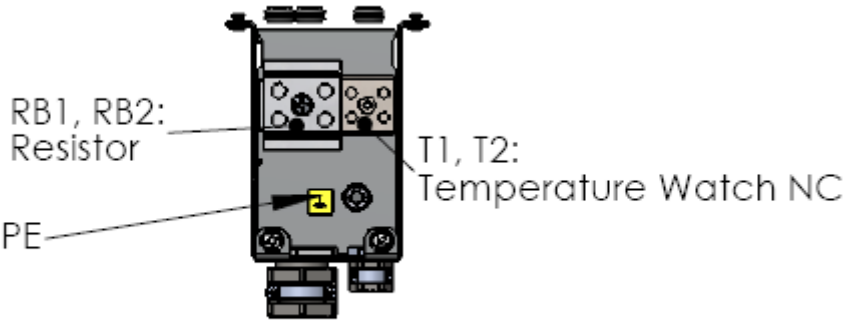

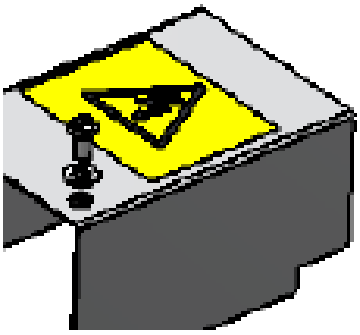

Cable connection

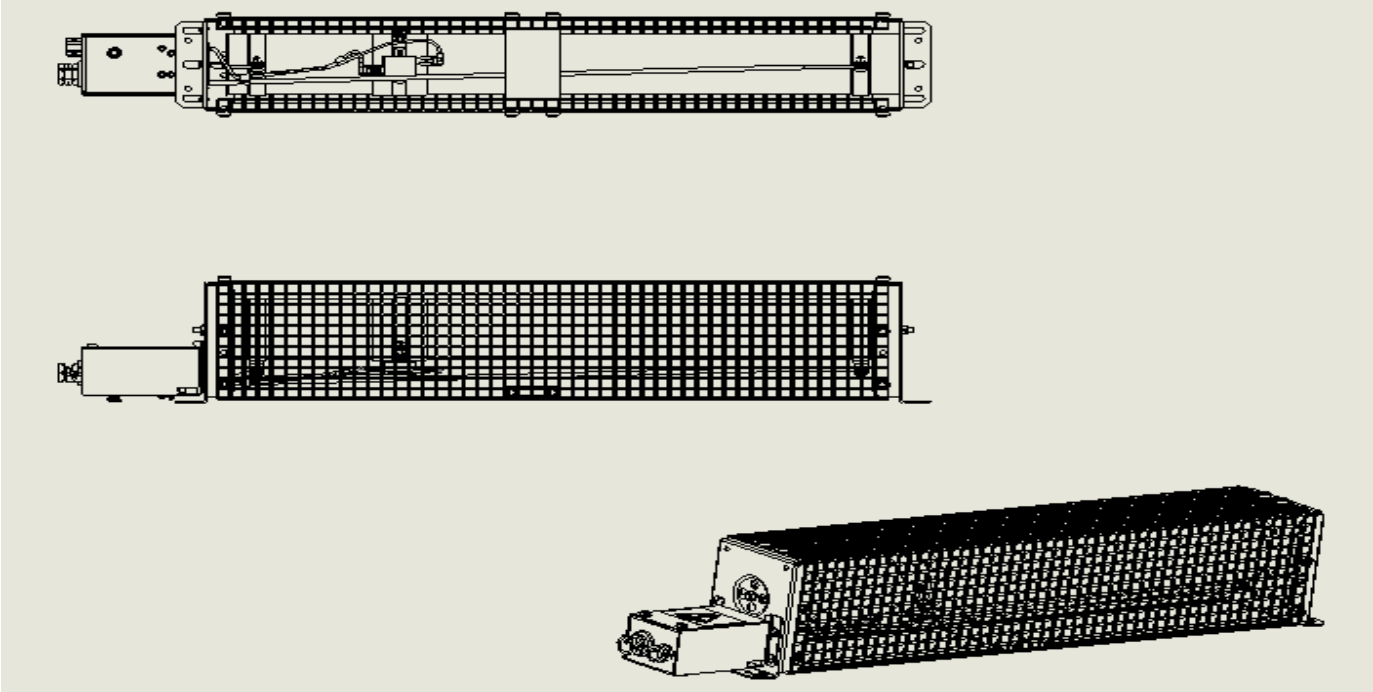
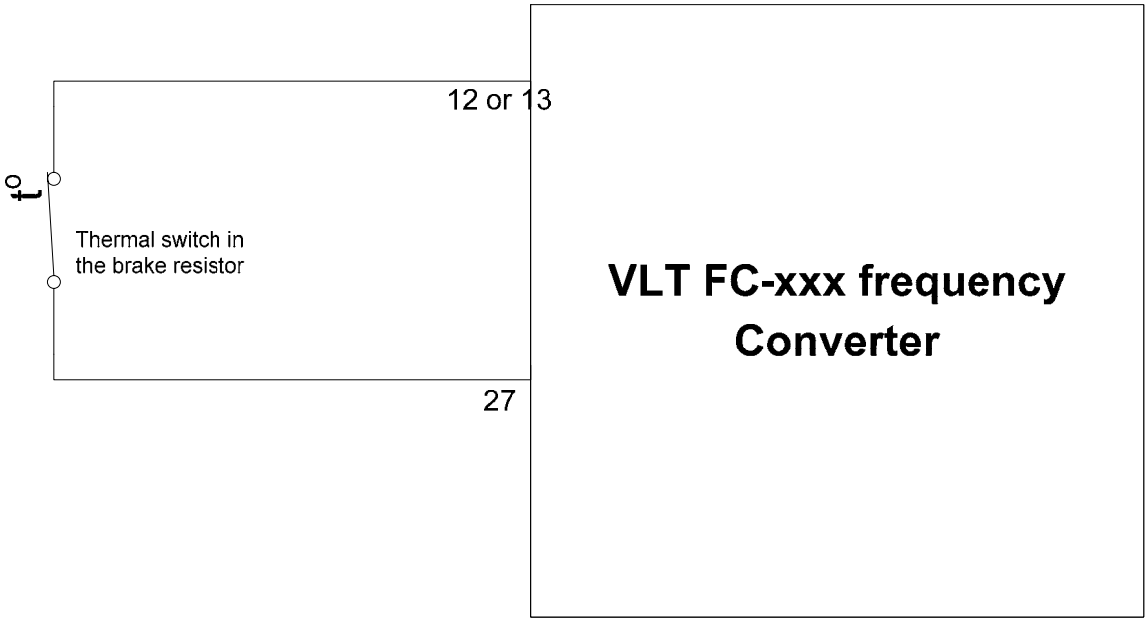
Electrical connection of the brake resistor thermoswitch