ENGINEERING
TOMORROW

Operating Guide

VACON® 3000 Enclosed Drive

drives.danfoss.com | VACON®

Contents

1 Introduction 9

1.1 Purpose of this Operating Guide 9

1.2 Additional Resources 9

1.3 Manual Version 9

2 Safety 10

2.1 Safety Symbols 10

2.2 Qualified Personnel 10

2.3 Danger and Warnings 10

2.4 Cautions and Notices 12

2.5 Main Circuit Breaker 14

2.5.1 Safety and Protection Requirements 14

2.5.2 Minimum Requirements for MCB and MCB Control 14

3 Product Overview 16

3.1 Intended Use 16

3.2 Product Description 16

3.2.1 AFE Drive 16

3.2.2 12-Pulse Drive 17

3.3 Type Code Description 17

3.4 Available Options 18

4 Receiving the Delivery 21

4.1 Checking the Delivery 21

4.2 Storage 21

4.3 Lifting and Moving the Enclosed Drive 21

5 Mechanical Installation 24

5.1 Operating Environment 24

5.2 Cabinet Installation 24

5.3 Dimensions of the Enclosed Drive 25

5.4 Liquid Cooling Requirements 26

5.4.1 Safety in Liquid-cooling 26

5.4.2 General Information on Liquid Cooling 26

5.4.3 Cooling Liquid 27

5.4.3.1 Quality Requirements for the Purified Water 27

5.4.3.2 Purified Water as Coolant 27

5.4.3.3 Antifreeze Mix as Coolant 27

5.4.3.4 Temperature of the Cooling Liquid 28
5.4.3.5 Condensation 28
5.4.4 Cooling System 30
5.4.4.1 Materials 30
5.4.4.2 Cooling System Overview 31
5.4.4.3 Cooling Connections to the Enclosed Drive 31
5.5 Cooling and Free Space Around the Enclosed Drive 32

6 Electrical Installation 34
6.1 Galvanic Isolation Between the MV and LV Sections 34
6.2 Mains and Motor Cable Selection 35
6.3 Mains and Motor Cable Inlet and Termination 35
6.4 Grounding 38
6.4.1 Standard Grounding Configurations 38
6.5 Additional Instructions for Cable Installation 39
6.6 Main Circuit Breaker Installation 40
6.7 Cabling of the Power Modules 40
6.7.1 Phase Module L20/L30 Terminals 40
6.7.2 DFE Power Module Terminals 40
6.7.2.1 DFE Control Terminals 41
6.7.3 Power Module Grounding 42
6.7.4 DC-Link Connections 43
6.7.5 Brake Chopper Installation 45
6.7.6 Terminal Screw Tightening Torque Specifications 45
6.7.7 LED Display on the Phase Module 45
6.7.8 LED Display on the DFE Power Module 47
6.8 Low-Voltage Power Supplies 48
6.8.1 Low-Voltage Power Supply Connections 48
6.8.2 Safety Notes for the Precharge Unit 49
6.8.3 Location of the Precharge Unit 49
6.9 Safety Functions 49
6.9.1 Safe Torque Off (STO) 50
6.9.2 Safe Stop 1 (SS1) 50
6.9.3 Safety Considerations 50
6.9.3.1 Diagnostic Test 50
6.9.4 STO Operating Principle 51
6.9.5 SS1 Operating Principle 51

7 Control Connections 52

7.1 Control Interface 52

7.2 The Control Compartment of the Enclosed Drive 52

7.3 Control Unit Components 53

7.4 Control Unit Cabling 54

7.4.1 Selection of the Control Cables 55

7.4.2 Control Unit Terminals 55

7.5 DIP Switches on the Control Unit 56

7.5.1 Selection of Terminal Functions with DIP Switches 56

7.5.2 Isolation of the Digital Inputs from Ground 57

7.6 Fieldbus Connection 58

7.6.1 Fieldbus Terminals 58

7.6.2 Using Fieldbus through an Ethernet Cable 59

7.6.3 Using Fieldbus through an RS485 Cable 60

7.7 Option Board Installation 62

7.8 Optical Fiber Connections 63

7.8.1 Selection of Optical Fiber Cables 66

7.8.2 Making Optical Fiber Cables 67

7.9 Encoder Interface 68

7.9.1 Encoder Terminals and Signals 69

7.9.2 Encoder Jumper Configurations 70

7.9.3 Encoder Connection 72

7.10 Battery for the Real-Time Clock (RTC) 73

7.11 Galvanic Isolation Barriers 73

7.12 System and Application Software 73

7.13 Technical Data on Control Connections 73

7.14 Auxiliary I/O Board 75

7.14.1 Connector Locations 75

7.14.2 Connector Specifications 76

7.14.3 LED Display on the Auxiliary I/O Board 80

8 Commissioning 82

8.1 Safety Checks before Starting the Commissioning 82

8.2 Operating the Grounding Switch 82

8.3 Commissioning the Drive 83

8.3.1 Basic Job Information 83

8.3.2 Before Power-up Checklist 84

8.3.3 Control and Auxiliary Power Commissioning Checklist 87

8.3.4 Medium-Voltage Power Commissioning Checklist 88
8.4 Commissioning Procedures 88
8.4.1 Filling the Liquid Cooling System 88
8.4.2 Grid Voltage Feedback Configuration 92
8.4.3 Installing Software on the Control Unit 94
8.4.4 Verifying the Phase Module Connections 97
8.4.5 Commissioning Test 98
8.4.5.1 Commissioning Test with HMI Touch Screen 99
8.4.5.2 Commissioning Test with VACON® Live 100
8.4.6 AFE Synchronization Test 101
8.4.7 Encoder Setup 105
8.5 Insulation Resistance Measurements 106
8.5.1 Measuring the Switchgear Insulation Resistance 106
8.5.2 Measuring the Cable and Motor Insulation 107
8.5.2.1 Insulation Checks of the Motor Cable 107
8.5.2.2 Insulation Checks of the Mains Cable 107
8.5.2.3 Insulation Checks of the Motor 107

9 Maintenance 108
9.1 Preventive Maintenance Recommendations 108
9.2 Maintenance of the Heat Exchanger 110

10 Fault Tracing 111
10.1 Fault Types 111
10.2 Faults and Alarms 111
10.2.1 Fault Code 1 - Overcurrent 111
10.2.2 Fault Code 2 - Overvoltage 112
10.2.3 Fault Code 3 - Earth Fault 113
10.2.4 Fault Code 5 - Charging Switch 114
10.2.5 Fault Code 7 - Saturation 114
10.2.6 Fault Code 8 - System Fault 114
10.2.7 Fault Code 9 - Undervoltage 122
10.2.8 Fault Code 10 - Input Phase 122
10.2.9 Fault Code 11 - Output Phase Supervision 124
10.2.10 Fault Code 12 - Brake Chopper Supervision 124
10.2.11 Fault Code 13 - AC Drive Undertemperature 125
10.2.12 Fault Code 14 - AC Drive Overtemperature 125
10.2.13 Fault Code 15 - Motor Stall 127
10.2.14 Fault Code 16 - Motor Overtemperature 127

10.2.15 Fault Code 17 - Motor Underload 127
10.2.16 Fault Code 19 - Power Overload 128
10.2.17 Fault Code 25 - Motor Control Fault 128
10.2.18 Fault Code 26 - Start-up Prevented 129
10.2.19 Fault Code 29 - ATEX Thermistor 129
10.2.20 Fault Code 30 - Safety 129
10.2.21 Fault Code 32 - Fan Cooling 132
10.2.22 Fault Code 33 - Fire Mode Enabled 132
10.2.23 Fault Code 37 - Device Changed (Same Type) 132
10.2.24 Fault Code 38 - Device Added (Same Type) 133
10.2.25 Fault Code 39 - Device Removed 134
10.2.26 Fault Code 40 - Device Unknown 134
10.2.27 Fault Code 41 - IGBT Temperature 135
10.2.28 Fault Code 43 - Encoder Fault 135
10.2.29 Fault Code 44 - Device Changed (Different Type) 137
10.2.30 Fault Code 45 - Device Added (Different Type) 138
10.2.31 Fault Code 46 - Real Time Clock 138
10.2.32 Fault Code 47 - Software Update 139
10.2.33 Fault Code 49 - Precharge 139
10.2.34 Fault Code 50 - AI Low Fault 143
10.2.35 Fault Code 51 - Device External Fault 143
10.2.36 Fault Code 52 - Keypad Communication Fault 144
10.2.37 Fault Code 53 - Fieldbus Communication Fault 144
10.2.38 Fault Code 54 - Slot Fault 144
10.2.39 Fault Code 57 - Identification 145
10.2.40 Fault Code 58 - Mechanical Brake 146
10.2.41 Fault Code 59 - Communication 146
10.2.42 Fault Code 61 - Speed Error Fault 146
10.2.43 Fault Code 63 - Quick Stop 146
10.2.44 Fault Code 65 - PC Communication Fault 147
10.2.45 Fault Code 66 - Thermistor Input Fault 147
10.2.46 Fault Code 67 - Module Test Stand 148
10.2.47 Fault Code 68 - Maintenance Counter 148
10.2.48 Fault Code 69 - Fieldbus Mapping Error 148
10.2.49 Fault Code 76 - Start Prevented 149
10.2.50 Fault Code 77 - >5 Connections 149
10.2.51 Fault Code 78 - Identification Ongoing 149
10.2.52 Fault Code 80 - Fieldbus Watchdog Fault 149

10.2.53 Fault Code 84 - Overspeed Error 149

10.2.54 Fault Code 111 - Temperature Input Fault 1 149

10.2.55 Fault Code 112 - Temperature Input Fault 2 150

10.2.56 Fault Code 114 - User Defined Fault 1 150

10.2.57 Fault Code 115 - User Defined Fault 2 151

10.2.58 Fault Code 200 - Precharge 151

10.2.59 Fault Code 201 - High Humidity/Temperature 152

10.2.60 Fault Code 202 - Encoder 152

10.2.61 Fault Code 203 - STO Fault 153

10.2.62 Fault Code 204 - Output Filter 153

10.2.63 Fault Code 205 - Coolant Temperature 153

10.2.64 Fault Code 300 - Unsupported 153

11 Specifications 154

11.1 Power Ratings 154

11.1.1 Power Ratings for Mains Voltage 3300 V 154

11.1.2 Power Ratings for Mains Voltage 4160 V 154

11.1.3 Overload Capability 155

11.2 Technical Data 155

11.2.1 Mains Supply 155

11.2.2 Motor Output 156

11.2.3 Control Properties 156

11.2.4 Drive Properties 157

11.2.5 Ambient Conditions 158

11.2.6 Cooling 159

11.2.7 Source Impedance Specifications 160

11.3 Main Circuit Diagrams 164

11.3.1 VACON® 3000 AFE Main Circuit Diagrams 164

11.3.2 VACON® 3000 12-Pulse Main Circuit Diagrams 166

11.4 Abbreviations 167

1 Introduction

1.1 Purpose of this Operating Guide

This Operating Guide provides information for safe installation and commissioning of the AC drive. It is intended for use by qualified personnel.

Read and follow the instructions to use the drive safely and professionally.

Pay particular attention to the safety instructions and general warnings. Always keep this Operating Guide with the drive.

1.2 Additional Resources

Other resources are available to understand advanced AC drive functions, programming, and options.

- The VACON® 3000 application guides provide greater detail on how to work with the applications and how to set the parameters of the AC drive.
- The operating and installation guides for VACON® options give detailed information about specific drive options.

Supplementary publications and manuals are available from Danfoss. See www.danfoss.com for listings.

1.3 Manual Version

This manual is regularly reviewed and updated. All suggestions for improvement are welcome.

The original language of this manual is English.

Table 1: VACON® 3000 Enclosed Drive Operating Guide Version

Version	Release date	Remarks
A	29.09.2021	First version

2 Safety

2.1 Safety Symbols

The following symbols are used in this manual:

⚠ D A N G E R ⚠

Indicates a hazardous situation which, if not avoided, will result in death or serious injury.

⚠ W A R N I N G ⚠

Indicates a hazardous situation which, if not avoided, could result in death or serious injury.

⚠ C A U T I O N ⚠

Indicates a hazardous situation which, if not avoided, could result in minor or moderate injury.

N O T I C E

Indicates information considered important, but not hazard-related (for example, messages relating to property damage).

2.2 Qualified Personnel

To allow trouble-free and safe operation of the unit, only qualified personnel with proven skills are allowed to transport, store, assemble, install, program, commission, maintain, and decommission this equipment.

Persons with proven skills:

- Are qualified electrical engineers, or persons who have received training from qualified electrical engineers and are suitably experienced to operate devices, systems, plant, and machinery in accordance with pertinent laws and regulations.
- Are familiar with the basic regulations concerning health and safety/accident prevention.
- Have read and understood the safety guidelines given in all manuals, especially the instructions given in the operating guide of the unit.
- Have good knowledge of the generic and specialist standards applicable to the specific application.
- Are familiar with the structure and operation of medium-voltage drives and the related risks. Special training for medium-voltage installations may be necessary.

2.3 Danger and Warnings

⚠ D A N G E R ⚠

SHOCK HAZARD FROM POWER UNIT COMPONENTS

The power unit components are live when the drive is connected to mains. Contact with this voltage can result in death or serious injury.

– Do not touch the components of the power unit when the drive is connected to mains.
Do not do any work on live equipment.
Before doing any work on internal drive components, follow proper lock out and tag out procedure.
Before connecting the drive to mains, make sure that all covers are installed on the drive and the enclosure doors are closed.

⚠ D A N G E R ⚠

SHOCK HAZARD FROM TERMINALS

The motor terminals U, V, W, the brake resistor terminals, and the DC-link terminals must be treated as live when the drive is connected to mains. Contact with this voltage can lead to death or serious injury.

- Do not touch the motor terminals U, V, W, the brake resistor terminals, or the DC terminals when the drive is connected to mains.
  Do not do any work on live equipment.
  Before doing any work on the drive, follow proper lock out and tag out procedure.
  Before connecting the drive to mains, make sure that all covers are installed on the drive and the enclosure doors are closed.

⚠ D A N G E R ⚠

SHOCK HAZARD FROM DC LINK OR EXTERNAL SOURCE

The terminal connections and the components of the drive can be live several minutes after the drive is disconnected from the mains and the motor has stopped. The load side of the drive can also generate voltage. A contact with this voltage can lead to death or serious injury.

- Disconnect the drive from the mains and make sure that the motor has stopped.
  Disconnect the motor.
  Lock out and tag out the power source to the drive.
  Make sure that no external source generates unintended voltage during work.
  To ground the drive input and DC link, close the grounding switch. If there is no grounding switch, make sure that the drive input and DC link are grounded for work. Also ground the motor terminals for work.
  Wait for the DC-link capacitors to discharge fully before opening the cabinet door or the cover of the AC drive. The discharge time is <7 minutes for AFE drives and <21 minutes for 12-pulse drives.
  Use a measuring device to make sure that there is no voltage.

⚠ W A R N I N G ⚠

SHOCK HAZARD FROM CONTROL TERMINALS

The control terminals can have a dangerous voltage also when the drive is disconnected from mains. A contact with this voltage can lead to injury.

- Make sure that there is no voltage in the control terminals before touching the control terminals.

⚠ W A R N I N G ⚠

ACCIDENTAL MOTOR START

When there is a power-up, a power break, or a fault reset, the motor starts immediately if the start signal is active, unless the pulse control for Start/Stop logic is selected. If the parameters, the applications or the software change, the I/O functions (including the start inputs) can change. If you activate the auto reset function, the motor starts automatically after an automatic fault reset. See the Application Guide. Failure to ensure that the motor, system, and any attached equipment are ready for start can result in personal injury or equipment damage.

- Disconnect the motor from the drive if an accidental start can be dangerous. Make sure that the equipment is safe to operate under any condition.

⚠ WARNING ⚠

ELECTRICAL SHOCK HAZARD - LEAKAGE CURRENT HAZARD >3.5 MA

Leakage currents exceed 3.5 mA. Failure to connect the drive properly to protective earth (PE) can result in death or serious injury.

- Ensure reinforced protective earthing conductor according to IEC 60364-5-54 cl. 543.7 or according to local safety regulations for high touch current equipment. The reinforced protective earthing of the drive can be done with:
- a PE conductor with a cross-section of at least 10 mm^2 (8 AWG) Cu or 16 mm^2 (6 AWG) Al.
- an extra PE conductor of the same cross-sectional area as the original PE conductor as specified by IEC 60364-5-54 with a minimum cross-sectional area of 2.5 mm^2 (14 AWG) (mechanical protected) or 4 mm^2 (12 AWG) (not mechanical protected).
- a PE conductor completely enclosed with an enclosure or otherwise protected throughout its length against mechanical damage.
- a PE conductor part of a multi-conductor power cable with a minimum PE conductor cross-section of 2.5 mm^2 (14 AWG) (permanently connected or pluggable by an industrial connector. The multi-conductor power cable shall be installed with an appropriate strain relief).
- NOTE: In IEC/EN 60364-5-54 cl. 543.7 and some application standards (for example IEC/EN 60204-1), the limit for requiring reinforced protective earthing conductor is 10 mA leakage current.

2.4 Cautions and Notices

⚠ CAUTION ⚠

DAMAGE TO THE AC DRIVE FROM INCORRECT SPARE PARTS

Using spare parts that are not from the manufacturer can damage the drive.

- Do not use spare parts that are not from the manufacturer.

⚠ CAUTION ⚠

DAMAGE TO THE AC DRIVE FROM CHANGES TO DRIVE COMPONENTS

Doing electrical or mechanical changes to the drive components can cause malfunctions and can damage the AC Drive.

- Do not make electrical or mechanical changes to the drive components.

⚠ CAUTION ⚠

DAMAGE TO THE AC DRIVE FROM INSUFFICIENT GROUNDING

Not using a grounding conductor can damage the drive.

- Always ground the AC drive with a grounding conductor that is connected to the grounding terminal that is identified with the PE symbol. If no dedicated transformer is installed, the AC drive is intended for high resistance grounding systems with a resistance grounded neutral point. For operation in an IT network without a dedicated transformer, consult Danfoss.

⚠ CAUTION ⚠

CUT HAZARD FROM SHARP EDGES

There can be sharp edges in the AC drive that can cause cuts.

- Wear protective gloves when mounting, cabling, or doing maintenance operations.

⚠ CAUTION ⚠

BURN HAZARD FROM HOT SURFACES

Touching surfaces, which are marked with the 'hot surface' sticker, can result in injury.

- Do not touch surfaces which are marked with the 'hot surface' sticker.

NOTICE

DAMAGE TO THE AC DRIVE FROM STATIC VOLTAGE

Some of the electronic components inside the AC drive are sensitive to ESD. Static voltage can damage the components.

- Use ESD protection when working with electronic components of the AC drive. Do not touch the components on the circuit boards without proper ESD protection.

NOTICE

DAMAGE TO THE AC DRIVE FROM MOVEMENT

Movement after installation can damage the drive.

- Do not move the AC drive during operation. Use a fixed installation to prevent damage to the drive.

NOTICE

DAMAGE TO THE AC DRIVE FROM INCORRECT EMC LEVEL

The EMC level requirements for the AC drive depend on the installation environment. An incorrect EMC level can damage the drive.

- Before connecting the AC drive to the mains, make sure that the EMC level of the AC drive is correct for the mains.

NOTICE

RADIO INTERFERENCE

In a residential environment, this product can cause radio interference.

- Take supplementary mitigation measures.

NOTICE

MAINS DISCONNECTION DEVICE

If the AC drive is used as a part of a machine, the machine manufacturer must supply a mains disconnection device (refer to EN 60204-1).

NOTICE

MALFUNCTION OF FAULT CURRENT PROTECTIVE SWITCHES

Because there are high capacitive currents in the AC drive, it is possible that the fault current protective switches do not operate correctly.

NOTICE

VOLTAGE WITHSTAND TESTS

If done improperly, doing voltage withstand tests can damage the drive.

- Megohmmeter testing is the only recommended test type for field installations.
  Only a qualified field service engineer is allowed to perform this test.
  Refer to the proper high potential/megohmmeter testing instructions in the service guide.

NOTICE

WARRANTY

If the power modules are opened, the warranty is not valid.

- Do not open the power modules.

N O T I C E

PERSONAL PROTECTIVE EQUIPMENT AND APPROVED TOOLS

When doing electrical work on the AC drive, always use personal protective equipment (PPE) and tools which are approved for work with medium-voltage devices.

2.5 Main Circuit Breaker

The main circuit breaker (MCB) is an important protection device for the drive. If there is a serious fault in the drive, the MCB immediately disconnects the main supply to the drive. To protect personnel and to prevent further damage to the equipment, the main supply must be disconnected immediately with an open or trip command from the drive.

If the drive is supplied through a dedicated transformer, install the MCB on the primary side of the supply transformer (see Illustration 1).

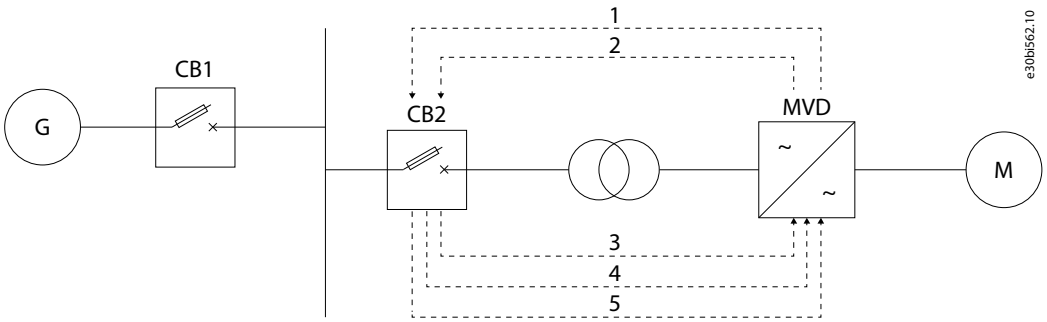

Illustration 1: Overview of the Drive System

1	Trip coil: RO from VACON® 3000 (reaction time: 10 ms delay)
2	Undervoltage release (UVR): IGBT switch from arc flash relay (reaction time: 2 ms delay)
3	Breaker open: RO from the breaker
4	Breaker closed: RO from the breaker
5	Breaker ready (optional): RO from the breaker

CB1	Circuit breaker 1
CB2	Circuit breaker 2
G	Grid or generator
M	Motor
MVD	VACON® 3000 medium-voltage drive

2.5.1 Safety and Protection Requirements

For safety and protection, the MCB must meet the minimum requirements of the specifications of Danfoss medium-voltage drives. The minimum requirements for the MCB are stated in this manual and in the respective MCB specifications, which are available for each medium-voltage drive from Danfoss. The system integrator must make sure that the minimum requirements are met.

The safety requirements for the drive are based on the following standards:

- EN ISO 13849-1: Safety of machinery, Safety-related parts of control systems, General principles for design, section 6.2.6 Category 3
- UL347A, Edition 1: Standard for Medium Voltage Power Conversion Equipment

2.5.2 Minimum Requirements for MCB and MCB Control

Requirements

To meet the stipulated safety requirements, Danfoss requires the following:

- MCB is equipped with 2 independent opening coils.
- MCB is equipped with an opening coil and an undervoltage coil for monitoring of the control voltage.
- Route the MCB open and trip commands directly from the drive to the MCB.
  - Do not route the trip command through any PLC or DCS (distributed control system) which is not certified to meet SIL 3-level requirements and to fulfill the given timing requirements.
  - Opening of the MCB by the drive must be possible at any time. Do not interrupt the open and trip commands, for example, by a local-remote switch in the MCB.

- Closing the MCB locally is not permitted. When the MCB is in the service position, the drive must have exclusive control of closing the MCB.
- The maximum opening time of the MCB must never exceed the product or project specific maximum time defined in the MCB specifications.
- Typical maximum protection and safety trip time for the drive: **60 ms**

Recommendations

To meet the stipulated safety requirements, Danfoss recommends the following:

- Provide an upstream protection coordination scheme which uses the "breaker failure" (ANSI 50BF) signal to trip the upstream breaker automatically, in case the MCB does not open.
- After a failure has occurred, the upstream breaker must open within the maximum protection and safety trip time.

3 Product Overview

3.1 Intended Use

VACON® 3000 is a liquid-cooled AC drive for stepless speed or torque control of medium-voltage induction motors. VACON® 3000 Enclosed Drive is a complete medium-voltage drive installed in a cabinet.

VACON® 3000 Enclosed Drive is available for industrial applications with motor voltages of 3300 V and 4160 V, and in a power range starting from 2 MW. Basic configurations have a power of 2 MW or 3 MW. These configurations can be paralleled for systems of 4 MW and above.

Two different drive configurations are available:

- Regenerative, with an active front-end (AFE)
- Non-regenerative, with a 12-pulse diode front-end (DFE)

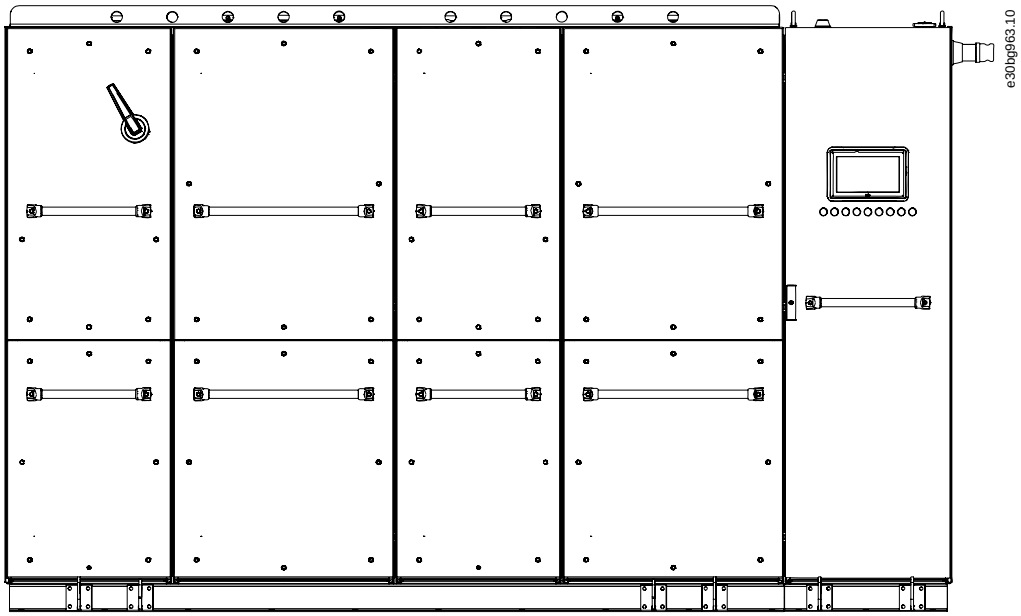

Illustration 2: Example of the VACON® 3000 Enclosed Drive

3.2 Product Description

3.2.1 AFE Drive

An example diagram of the regenerative VACON® 3000 Enclosed Drive is shown in Illustration 3. The main components of the drive are:

- The active front-end (AFE) unit includes 3 or 6 liquid-cooled 1-phase power conversion units (PCU). 3 of the phase modules are installed in parallel to make a 3-phase converter. The AFE converts the supplied AC voltage to DC voltage. It also enables the supply of power to the supply network when the motor is braking.
- The inverter unit (INU) includes 3 or 6 of the same liquid-cooled 1-phase modules, which are used in the AFE. The INU converts the DC voltage to the AC voltage and frequency supplied to the motor.
- The LC filter (FLC) limits harmonic current on the supply network.
- The pre-charge unit (PRC) charges the DC-link capacitors.
- The AFE and INU control units (CNU-AFE/CNU-INU) are connected to the power conversion units with optical fibers.
- The auxiliary I/O board (AXU-IOB) provides galvanic separation between I/Os in the MV section and the control unit in the LV section of the cabinet.

The basic VACON® 3000 AFE drive is intended for installations, where the system is supplied by a dedicated transformer and the source impedance is small. These installations are usually on land. The drive includes an LC filter instead of an LCL filter, because the supply side inductance is included in the dedicated transformer.

It is recommended to install a dedicated transformer for the drive. If the drive is not supplied by a dedicated transformer (that is, there are other loads than the drive on the same supply):

- Install the drive in a high resistance grounding system with a resistance grounded neutral point.
- Install an input common-mode filter (option +PICM).

If the source impedance is high, select the +PHSI option. See 11.2.7 Source Impedance Specifications.

For operation in an IT network without a dedicated transformer, contact Danfoss.

For the full main circuit diagrams, see 11.3.1 VACON® 3000 AFE Main Circuit Diagrams.

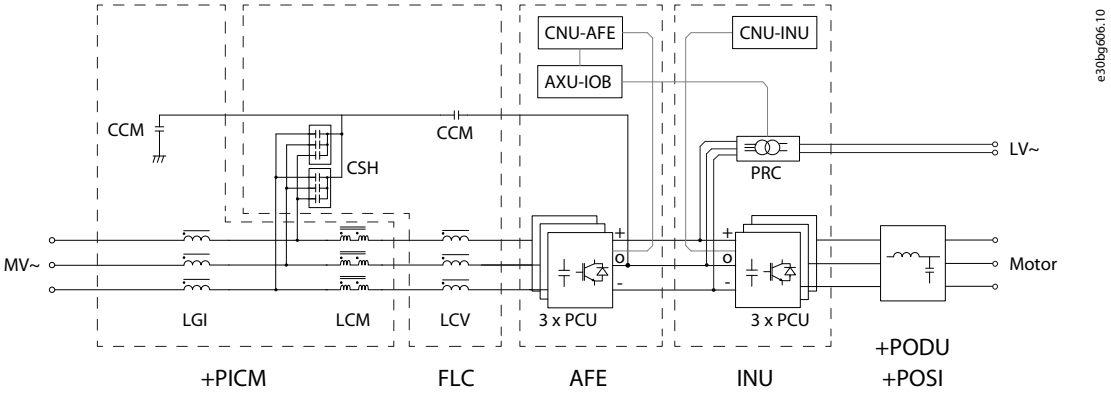

Illustration 3: Example Main Circuit Diagram of a VACON® 3000 AFE Drive

3.2.2 12-Pulse Drive

An example diagram of the 12-pulse non-regenerative VACON® 3000 Enclosed Drive is shown in Illustration 4. The main components of the drive are:

- The diode front-end unit (DFE) is a liquid-cooled 12-pulse power conversion unit (PCU), which changes the supplied AC voltage to DC voltage. The 12-pulse configuration is used to limit harmonics on the supply network.
- The inverter unit (INU) includes 3 or 6 liquid-cooled 1-phase power conversion units (PCU). 3 of the phase modules are installed in parallel to make a 3-phase converter. The INU converts the DC voltage to the AC voltage and frequency supplied to the motor.
- The pre-charge unit (PRC) charges the DC-link capacitors.
- The INU control unit (CNU-INU) is connected to the inverter units with optical fibers.
- The auxiliary I/O board (AXU-IOB) provides galvanic separation between I/Os in the MV section and the control unit in the LV section of the cabinet.

The 12-pulse DFE must be supplied by a dedicated transformer with two secondary windings.

For the full main circuit diagrams, see 11.3.2 VACON® 3000 12-Pulse Main Circuit Diagrams.

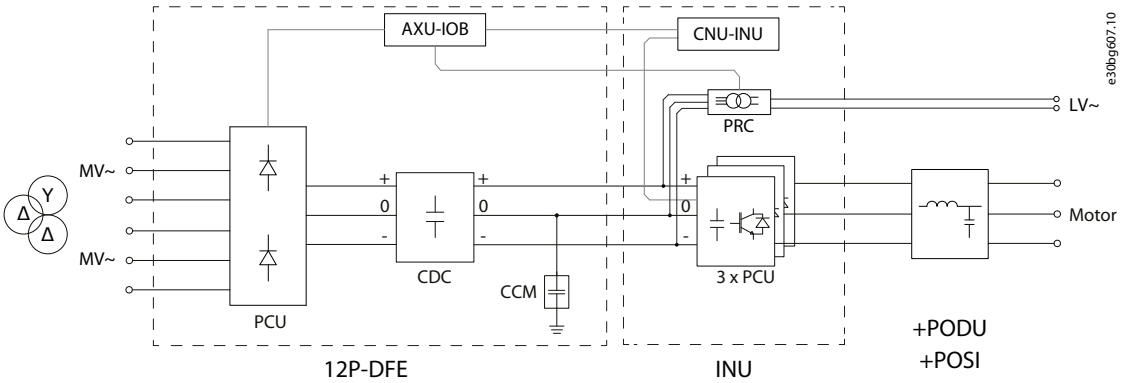

Illustration 4: Example Main Circuit Diagram of a VACON® 3000 12-Pulse Drive

3.3 Type Code Description

The type code for VACON® 3000 has five basic parts (1–5) and option codes (6).

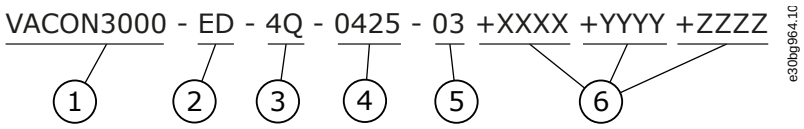

Illustration 5: VACON® 3000 Type Code Structure

1. Product series

VACON® 3000. This part of the code is always the same.

2. Product class

The VACON® 3000 product.

- **ED**: Enclosed Drive

3. Drive type

There are two different drive types available. All kits include an inverter unit (INU) as default. The front-end type is specified in the type code.

- **4Q**: A regenerative drive with an active front end (AFE) and an LC input filter, supplied through a dedicated transformer. If the drive is not supplied by a dedicated transformer, install a common-mode filter (available with option code +PICM).
- **12**: A non-regenerative drive with a 12-pulse diode front end (DFE) rectifier and external DC capacitors. A dedicated transformer with 2 secondary windings is necessary.

4. Nominal output current

See the available output currents in Table 2.

Table 2: Available Output Current Ratings

Input voltage [V]	3300	4160
Output current [A]	0425	0340
	0640	0510
	0820	0650
	1230	0980

5. Nominal input voltage

Nominal supply voltage: 03 = 3300 V or 04 = 4160 V.

6. Option codes

Optional components.

See the available codes in 3.4 Available Options.

3.4 Available Options

Table 3: Available Options for VACON® 3000 Enclosed Drive

Option Code	Option Description
+PICM (1)	Input common-mode filter The option is only available for AFE drives. Always include the input common-mode filter in VACON® 3000 AFE installations, which are not supplied by a dedicated transformer.
+PODU (1)	dU/dt output filter
+POSI (1)	Sine-wave output filter
+POCM (1)	Output common-mode filter Contact Danfoss to check the common-mode capacitor option selection.

Option Code	Option Description
+DBCU [1]	Brake chopper unit for dynamic braking The option does not include a brake resistor. The option is for 12-pulse drives. If a brake chopper is required for an AFE drive, contact Danfoss.
+PHSI	High source impedance Option for installation locations with high source impedances (~10–15% SI). For example, marine applications usually have a high source impedance. The option affects the size of the input filters. The default installation location has small source impedance (SSI). This option is only available for AFE drives. Examine each application one by one. To see if this option is necessary, find out the source impedance and see 11.2.7 Source Impedance Specifications. If necessary, consult Danfoss.
+SC__ +SD__ +SE__	C, D, and E slot option boards Default: No option boards in slots C, D, and E. See the available option boards in Table 4.
+QSTO	Safe torque off functionality. Only available for AFE drives.
+QFV1 +QFV2	Control and fan supply voltage 115 V (default for 4160 V) 230 V (default for 3300 V)
+PGDR +PGDN	Grounding of the heat sink and connection of the grounding resistor in power modules R: DC neutral-to-ground resistor connected (default) N: DC neutral-to-ground resistor not connected
+PLIN +PLDI	Liquid cooling options IN: Industrial water and grounded heat sink DI: Deionized water and floating heat sink
+PUFE	Short-circuit current rating: 40 kA, for 100 ms. Available only for AFE drives.
+PGC0	Common-mode capacitor to ground removed
+PLCT	Coolant input from the top
+PHET +PH00	Heat exchanger option ET: Titanium liquid-to-liquid heat exchanger included 00: Liquid-to-liquid heat exchanger not included
+QP24 +QP40 +QP48	Precharge input voltage 240 V 400 V (default for 3300 V) 480 V (default for 4160 V)
+GAUL	cUL certificate
+GACE	EU declaration, CE approval
+GADN	Marine approval DN: Det Norske Veritas

Option Code	Option Description
+GALR	LR: Lloyd's Register

[1] The nominal current and voltage selected in the type code of the VACON® 3000 affect this option. The correct size and number of parts is supplied automatically. If a different size or number of parts is needed, an order for separate parts is possible.

Table 4: Available Option Boards for Slots C, D, and E

Slot C	Slot D	Slot E	Option Board[1]
+SCB1	+SDB1	+SEB1	I/O board OPTB1: 6 x Digital input/digital output, programmable
+SCB2	+SDB2	+SEB2	I/O board OPTB2: 1 x relay output (NO/NC), 1 x relay output (NO), Thermistor
+SCB4	+SDB4	+SEB4	I/O board OPTB4: 1 x analog input, 2 x analog output (isolated)
+SCB5	+SDB5	+SEB5	I/O board OPTB5: 3 x relay output
+SCB9	+SDB9	+SEB9	I/O board OPTB9: 1 x relay output, 5 x digital input (42–240 V AC)
+SCBF	+SDBF	+SEBF	I/O board OPTBF: 1 x analog output, 1 x digital output, 1 x relay output
+SCBH	+SDBH	+SEBH	I/O board OPTBH: 3 x Temperature measurement (support for PT100, PT1000, NI1000, KTY84-130, KTY84-150, KTY84-131 sensors)
	+SDD3	+SED3	Adapter board OPTD3: RS232 adapter
	+SDE3	+SEE3	Fieldbus board OPTE3: PROFIBUS DP-V1 (Screw connector)
	+SDE5	+SEE5	Fieldbus board OPTE5: PROFIBUS DP-V1 (D9 connector)
	+SDE6	+SEE6	Fieldbus board OPTE6: CANopen
	+SDE7	+SEE7	Fieldbus board OPTE7: DeviceNet
	+SDE9	+SEE9	Fieldbus board OPTE9: 2-port Ethernet
	+SDEA	+SEEA	Fieldbus board OPTEA: Advanced 2-port Ethernet
	+SDEC	+SEEC	Fieldbus board OPTEC: EtherCAT

[1] For a 12-pulse drive, the option includes one board. For an AFE drive, the option includes two boards, one for the AFE control unit and one for the INU control unit. If the drive also has the brake chopper option (+DBCU), the option includes one more board for the brake chopper control unit.

4 Receiving the Delivery

4.1 Checking the Delivery

1. After removing the packaging, examine the drive for transport damages.
   - If the drive was damaged during the shipping, speak to the cargo insurance company or the carrier.
2. To make sure that the delivery is correct, compare the type code for the order to the type code on the package label. The type code specifies the drive type, nominal output current, nominal input voltage, and option codes. See 3.3 Type Code Description.
   - If the delivery does not agree with the order, speak to the vendor immediately.

4.2 Storage

N O T I C E

LIQUID IN THE HEAT SINK

If the cooling liquid is not removed from the heat sink before storage or shipping, the liquid can freeze and damage the drive.

– Always remove the cooling liquid from the heat sink before storage or shipping.

If the AC drive is kept in storage, keep it in controlled conditions.

- Storage temperature: -40…+70°C (-40... +158°F). If the storage temperature is below 0°C (+32°F), make sure that there is no cooling liquid in the heat sink.
- Relative humidity: < 96%, no condensation

Keep the equipment sealed in its packaging until installation.

4.3 Lifting and Moving the Enclosed Drive

⚠ W A R N I N G ⚠

LIFTING HEAVY EQUIPMENT

Follow local safety regulations for lifting heavy weights. Failure to follow recommendations and local safety regulations can result in death or serious injury.

– Ensure that the lifting equipment is in proper working condition.

The cabinets must be moved vertically. Always refer to the shipping marks on the package for more information. Do not remove the package material before installing the AC drive.

To lift the cabinets, use a lifting device that can lift the weight of the cabinets. There are lifting holes on the top of the cabinets. Use these holes to lift the cabinets and to move them to the installation location. The minimum angle between the cabinets and the chain is 60°.

To divide the weight of the cabinets equally, and to prevent damage to the equipment, always use 4 lifting holes. Align the lifting locations with the horizontal center of gravity.

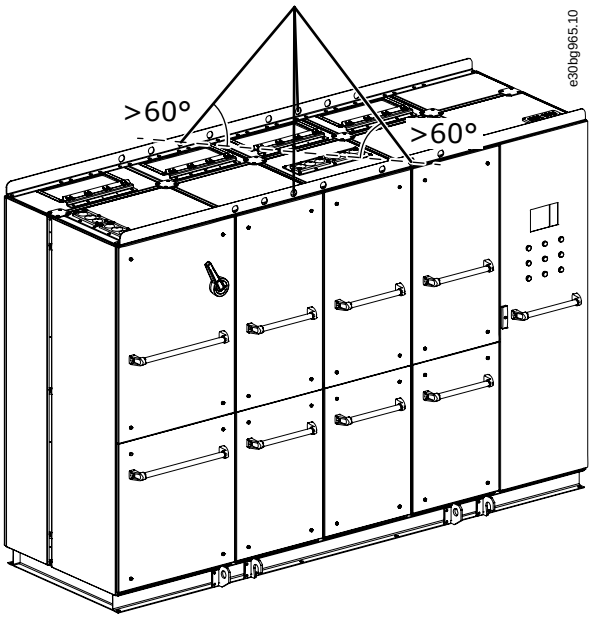

Illustration 6: Lifting the Cabinets

You can use rollers, for example, to move the cabinets.
Move the cabinets carefully. Switchgear parts can easily fall because their center of gravity is high up at the back of the cabinets.

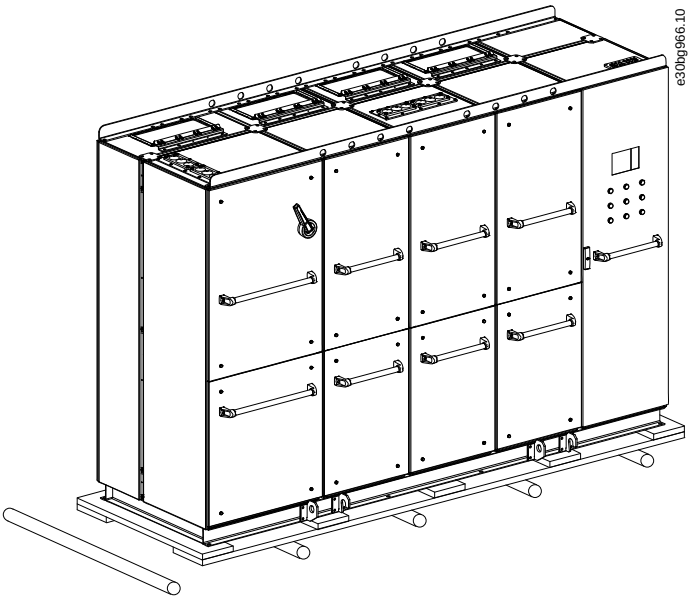

Illustration 7: Moving the Cabinets

When the cabinet is in the installation location, it can be necessary to make small adjustments to the position of the cabinet. Use a crowbar to move the cabinet from the special hooks on the cabinet base.
Remove the moving hooks from the base of the cabinet before installation.

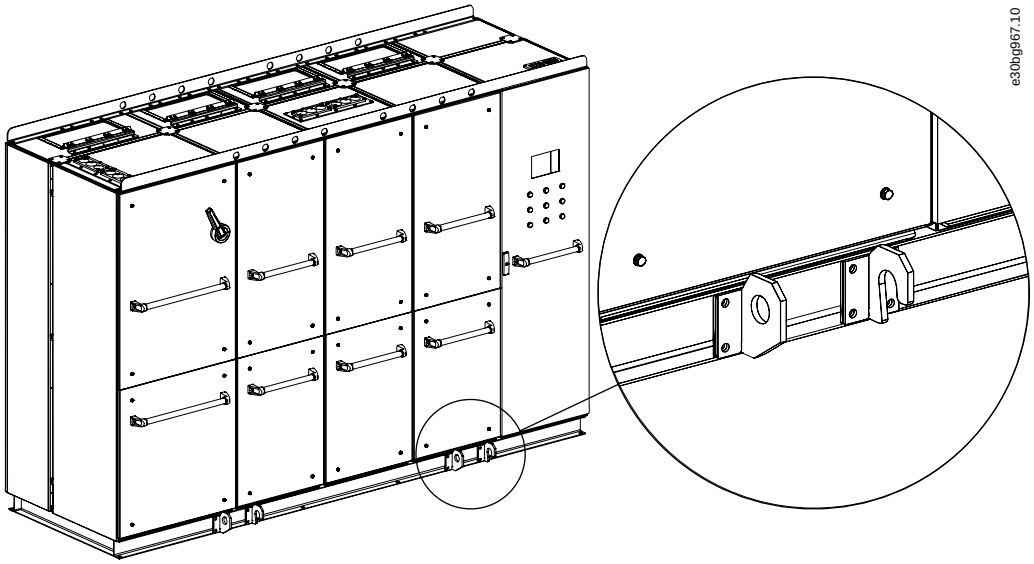

Illustration 8: Hooks on the Cabinet Base for Adjusting the Position of the Cabinet

5 Mechanical Installation

5.1 Operating Environment

NOTICE

CONDENSATION

Moisture can condense on the electronic components and cause short circuits.

- Avoid installation in areas subject to frost.
  Install space heaters to warm the air inside the cabinets.
  Before powering the drive, run the cooling pumps to warm up the components, until the drive is warmer than the ambient air.

NOTICE

EXTREME AMBIENT CONDITIONS

Hot or cold temperatures compromise unit performance and longevity.

In environments with airborne liquids, particles, or corrosive gases, ensure that the IP/Type rating of the equipment matches the installation environment. For specifications regarding ambient conditions, see 11.2.5 Ambient Conditions.

5.2 Cabinet Installation

Installation guidelines:

- Locate the drive as near to the motor as possible.
- Ensure unit stability by mounting the enclosure on a solid surface.
- Make sure that the level of the floor is in permitted limits. The maximum deviation from the basic level can be no more than 5 mm (0.197 in) along a 3 m (9.84 ft) distance. The maximum permitted height difference between the cabinet front and rear edges is 2 mm (0.079 in).
- Ensure that the strength of the mounting location supports the unit weight.
- It is not recommended to install the cabinet directly against a wall.
- Attach the cabinet to the floor. There are holes in the base of the cabinet which can be used for the installation.
- Ensure that there is enough space around the unit for proper cooling.
- Ensure that there is enough room to open the cabinet doors and for working on the equipment.
- Remove the moving hooks from the base of the cabinet before installation.

5.3 Dimensions of the Enclosed Drive

Illustration 9 and Table 5 show the dimensions of the basic VACON® 3000 Enclosed Drive. Some options can affect the total width or height of the cabinet. Always refer to the delivery-specific information for the accurate dimensions.

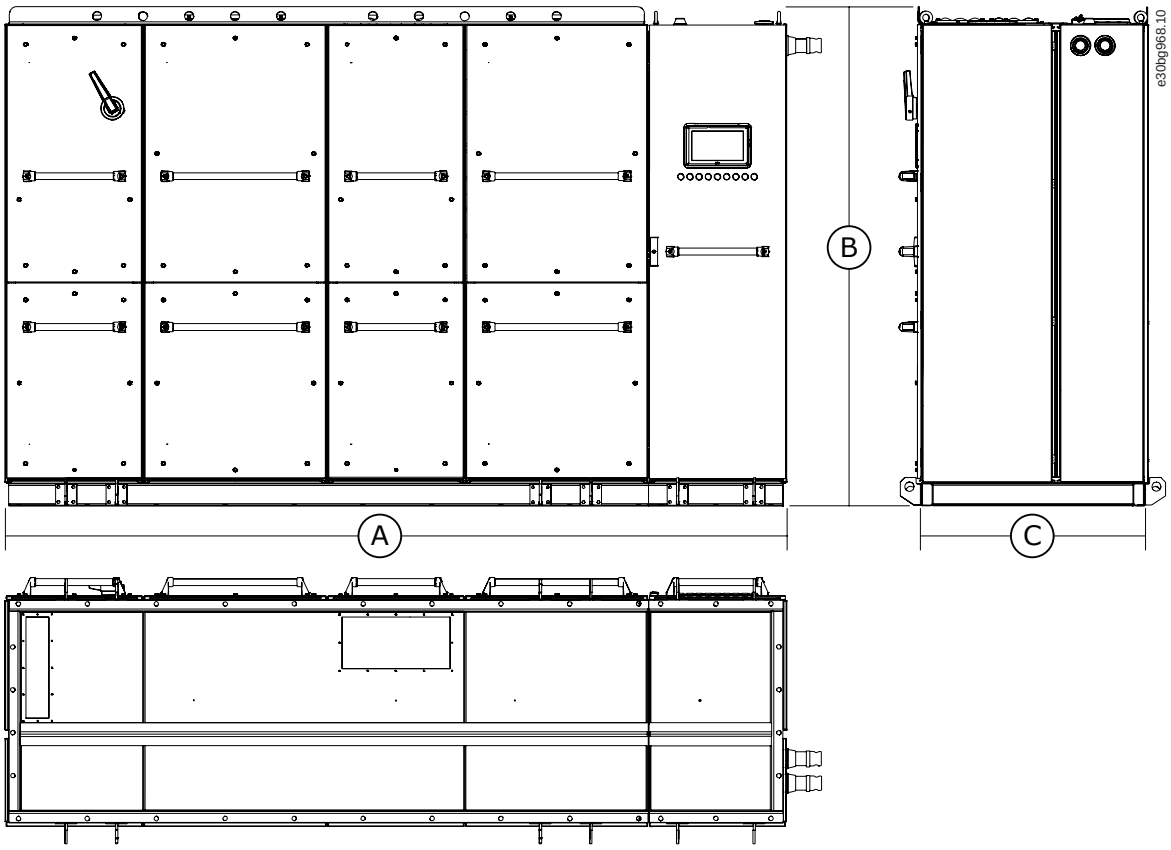

Illustration 9: Dimensions of the VACON® 3000 Enclosed Drive

A–C	See the dimensions in Table 5.

Table 5: Dimensions of the VACON® 3000 Enclosed Drive

Type code	Dimension A	Dimension B	Dimension C
VACON3000ED-4Q-0425-03	2400 mm (7 ft 10.5 in)	2130 mm (6 ft 11.9 in)	1000 mm (3 ft 3.4 in)
VACON3000ED-4Q-0640-03	2600 mm (8 ft 6.4 in)	2130 mm (6 ft 11.9 in)	1000 mm (3 ft 3.4 in)
VACON3000ED-4Q-0820-03	3800 mm (12 ft 5.6 in)	2130 mm (6 ft 11.9 in)	1000 mm (3 ft 3.4 in)
VACON3000ED-4Q-1230-03	4400 mm (14 ft 5.2 in)	2130 mm (6 ft 11.9 in)	1000 mm (3 ft 3.4 in)
VACON3000ED-4Q-0340-04	2400 mm (7 ft 10.5 in)	2130 mm (6 ft 11.9 in)	1000 mm (3 ft 3.4 in)
VACON3000ED-4Q-0510-04	2600 mm (8 ft 6.4 in)	2130 mm (6 ft 11.9 in)	1000 mm (3 ft 3.4 in)
VACON3000ED-4Q-0650-04	3800 mm (12 ft 5.6 in)	2130 mm (6 ft 11.9 in)	1000 mm (3 ft 3.4 in)
VACON3000ED-4Q-0980-04	4400 mm (14 ft 5.2 in)	2130 mm (6 ft 11.9 in)	1000 mm (3 ft 3.4 in)
VACON3000ED-12-0425-03	2400 mm (7 ft 10.5 in)	2130 mm (6 ft 11.9 in)	1000 mm (3 ft 3.4 in)
VACON3000ED-12-0640-03	2600 mm (8 ft 6.4 in)	2130 mm (6 ft 11.9 in)	1000 mm (3 ft 3.4 in)
VACON3000ED-12-0820-03	3400 mm (11 ft 1.9 in)	2130 mm (6 ft 11.9 in)	1000 mm (3 ft 3.4 in)
VACON3000ED-12-1230-03	3800 mm (12 ft 5.6 in)	2130 mm (6 ft 11.9 in)	1000 mm (3 ft 3.4 in)

Type code	Dimension A	Dimension B	Dimension C
VACON3000ED-12-0340-04	2400 mm (7 ft 10.5 in)	2130 mm (6 ft 11.9 in)	1000 mm (3 ft 3.4 in)
VACON3000ED-12-0510-04	2600 mm (8 ft 6.4 in)	2130 mm (6 ft 11.9 in)	1000 mm (3 ft 3.4 in)
VACON3000ED-12-0650-04	3400 mm (11 ft 1.9 in)	2130 mm (6 ft 11.9 in)	1000 mm (3 ft 3.4 in)
VACON3000ED-12-0980-04	3800 mm (12 ft 5.6 in)	2130 mm (6 ft 11.9 in)	1000 mm (3 ft 3.4 in)

5.4 Liquid Cooling Requirements

5.4.1 Safety in Liquid-cooling

⚠ WARNING ⚠

POISONOUS COOLANTS

Glycols and inhibitors are poisonous. If touched or consumed, they can cause injury.

- Prevent the coolant from getting into the eyes. Do not drink the coolant.

⚠ CAUTION ⚠

HOT COOLANT

Hot coolant can cause burns.

- Avoid contact with the hot coolant.

⚠ CAUTION ⚠

PRESSURIZED COOLING SYSTEM

Sudden release of pressure from the cooling system can cause injury.

- Be careful when operating the cooling system.

NOTICE

INSUFFICIENT COOLING CAPACITY

Insufficient cooling can cause the product to become too hot and thus become damaged.

- To make sure that the cooling capacity of the cooling system stays sufficient, make sure that the cooling system is vented and that the coolant circulates properly.

5.4.2 General Information on Liquid Cooling

VACON® 3000 drives are liquid-cooled. The liquid circulation of the drive is connected to a heat-exchanger that cools down the liquid circulating in the cooling elements of the drive. The power modules have aluminum heat sinks, which give good and safe temperature control. Because the cooling elements are made of aluminum, the cooling liquids allowed to be used are inhibited pure water, inhibited demineralized water, or an inhibited mixture of water and glycol.

The inductors of the input and output filters use air-to-liquid heat exchanger units for forced air cooling. The heat exchangers decrease the heat losses to the air and thus decreases the number of fans necessary for cooling the cabinet.

There are two types of cooling systems: open systems and closed systems.

An open system has no pressure but the hydrostatic and pumping pressure. It allows free contact between the cooling liquid and air. Air is continuously dissolved into the cooling liquid.

In a closed system, the piping is air-tight and there is a preset pressure inside the pipes. The pipes must be made of metal, or a specific plastic or rubber that includes an oxygen barrier that limits the diffusion of oxygen. Minimizing of oxygen content in the cooling liquid decreases the risk of corrosion of the metal parts. Closed systems usually have an expansion vessel that allows for a safe change of volume of the cooling liquid due to temperature changes.

Always use a closed system with Danfoss liquid-cooled drives.

5.4.3 Cooling Liquid

5.4.3.1 Quality Requirements for the Purified Water

N O T I C E

DAMAGE TO SYSTEM FROM THE USE OF HYDROCARBONS

Hydrocarbons damage the rubber seals of the cooling system.

- Do not use hydrocarbons (for example mineral oil) as coolant. Do not mix hydrocarbons to coolant.

Table 6: Requirements for the Purified Water

Property	Required value
pH	6...8
Chlorides	≤ 25 ppm
Sulphate ions	≤ 25 ppm
Maximum particle size	≤ 50 µm
Total dissolved solids	≤ 200 ppm
Total hardness ($CaCO_3$)	3…4.6 dH° (53…80 ppm)
Hydrogen carbonate	≤ 50 ppm
Electrical conductivity	≤ 500 µS/cm

5.4.3.2 Purified Water as Coolant

Purified water can be used as coolant if there is no risk of freezing. Freezing water permanently damages the cooling system. Purified water is demineralized, deionized, or distilled water.

Always use an inhibitor Cortec VpCI-649 with 1.0% of volume with purified water.

⚠ C A U T I O N ⚠

CORROSION HAZARD WITH DRINKING WATER

Some components are made of aluminum, which has limited corrosion resistance against high chloride concentrations. Drinking water can have a chloride concentration of 250 ppm, which increases the aluminum corrosion rate. High chloride concentration exposes aluminum especially to pitting corrosion which can damage the system relatively quickly.

- Use purified (demineralized, deionized, or distilled) water with corrosion inhibitors.

5.4.3.3 Antifreeze Mix as Coolant

The following antifreeze products are a good general solution for liquid cooling since they provide freeze protection and corrosion protection.

The allowed antifreeze coolants are the following ethylene glycols and propylene glycols.

Ethylene glycols

- DOWCAL 100
- Clariant Antifrogen N

Propylene glycols

- DOWCAL 200
- Clariant Antifrogen L

These glycols already include corrosion inhibitors. Do not add any other inhibitor. Do not mix different glycol qualities because there can be harmful chemical interactions.

The glycol concentration of the coolant must be 25–55% by volume, according to the specified ambient temperature. Higher concentration reduces cooling capacity. Lower concentration results in biological growth and inadequate amount of corrosion inhibitors. Antifreeze must be mixed with purified water according to 5.4.3.1 Quality Requirements for the Purified Water.

5.4.3.4 Temperature of the Cooling Liquid

To gain full performance of the product, the temperature of the cooling liquid entering the drive components must be a maximum of 43°C (109°F) and above the dew point. While circulating inside the cooling element, the liquid transfers the heat produced by the power semiconductors and other components. The temperature rise of the cooling liquid during the circulation is typically less than 4°C (7.2°F). Typically, more than 95% of the power losses are dissipated in the cooling liquid. It is recommended to equip the cooling circulation with temperature supervision.

The secondary circuit maximum temperature must always be lower than the primary circuit temperature. The temperature difference must be at least 5°C (9°F) with equal flow. The temperature difference is necessary for the correct operation of the heat exchanger.

There are 3 external causes that affect the nominal temperature of the primary circuit:

- The maximum ambient temperature at the drive installation location.
- The maximum relative humidity at the drive installation location.
- The maximum secondary circuit liquid temperature.

All these causes must be examined when calculating the primary circuit temperature. The primary circuit temperature can be different for each installation.

5.4.3.5 Condensation

Condensation must be avoided. Always keep the temperature of the cooling liquid a minimum 2°C (3.6°F) above the dew point. Use the graph in Illustration 10 to see if the conditions (combination of room temperature, humidity, and cooling liquid temperature) are safe for the drive to operate.

The conditions are safe when the point is below the related (cooling liquid temperature) curve. If they are not, decrease the ambient temperature or the relative humidity. Also the cooling liquid temperature can be increased. Note, that if the cooling liquid temperature is increased above the figures in loadability charts, it decreases the nominal output current of the drive. The curves in Illustration 10 are valid at sea level altitude (1013 mbar/14.69 psi).

If the temperature of the liquid in the secondary circuit is lower than the ambient temperature and the relative humidity is high, condensation can occur on the secondary circuit pipes and the plate heat exchanger in the HX unit. The condensation is not dangerous, but it is not recommended. If there is condensation in the HX unit, it can cause the leak sensor in the cabinet to give a leak alarm. If a leak alarm occurs again and again, install insulation in the secondary circuit pipes and the plate heat exchanger. The insulation stops the condensation and thus prevents the incorrect leak alarms.

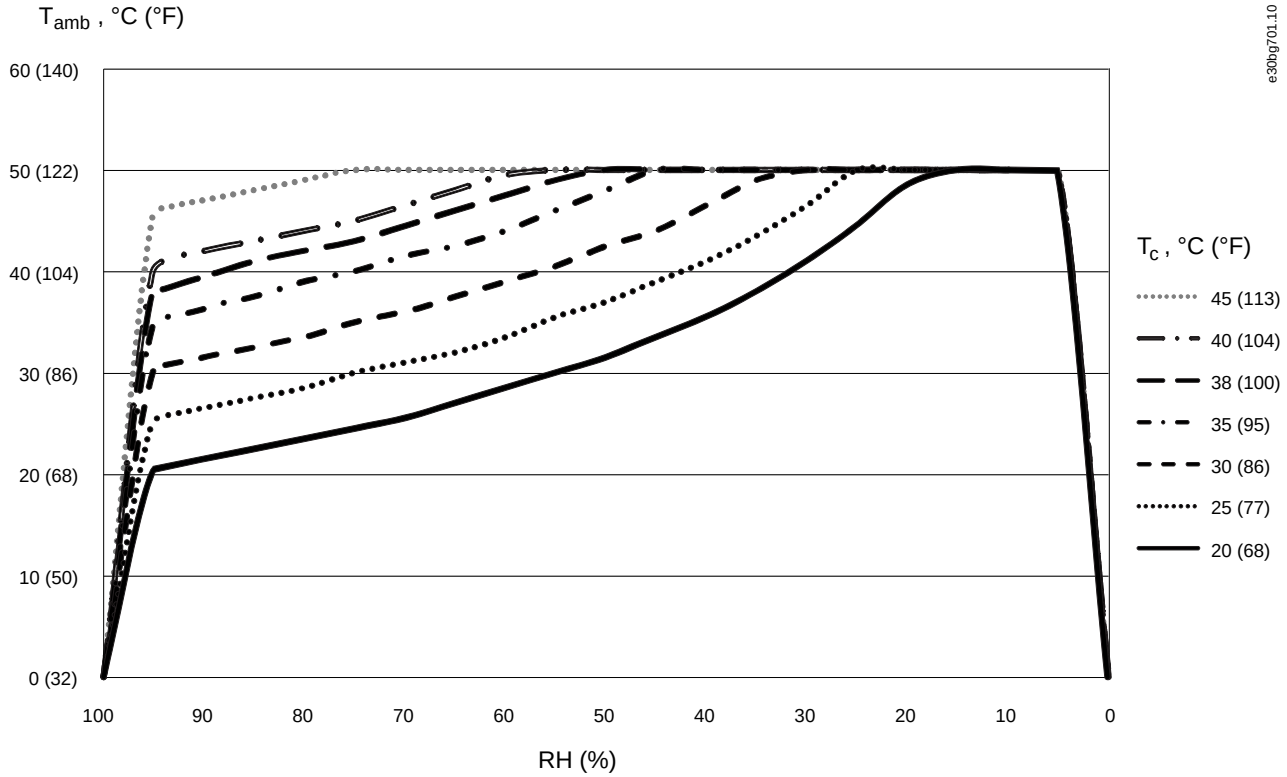

Illustration 10: Safe Operating Conditions in Relation to Condensation

RH	Relative humidity	T_c	Cooling liquid temperature
T_{amb}	Ambient temperature		

Example

Safe Operating Conditions

If the ambient temperature is +30°C (+86°F), the relative humidity is 40% and the cooling liquid temperature is +20°C (+68°F, the lowest curve in Illustration 10), then the drive operation conditions are safe.

If the ambient temperature increases to +35°C (+95°F) and the relative humidity to 60%, then the operation conditions of the drive are not safe. To get safe operation conditions, the ambient temperature must be decreased to +28°C (+82°F) or below. If it is not possible to lower the ambient temperature, then the cooling liquid temperature can be increased to +25°C (+77°F) or above.

Example

Dew Point and Primary Circuit Temperature

If the ambient temperature and the maximum relative humidity at the drive installation location is known, the dew point chart (see Illustration 11) can be used to find the correct temperature for the primary circuit.

- Ambient temperature = 35°C (95°F)
- Maximum relative humidity = 60%

According to the diagram in Illustration 11, the dew point for the given values is 26°C (78.8°F). Always keep the temperature of the cooling liquid a minimum 2°C (3.6°F) above the dew point. Thus the primary circuit minimum temperature is set to 28°C (82.4°F).

The secondary circuit maximum temperature must always be 5°C (9°F) lower than the primary circuit temperature. Thus, in this example, the secondary circuit temperature must be below 23°C (73.4°F) during operation.

Notice, that these conditions are valid for the starting of the drive. After the start, the temperature inside the cabinet starts to increase and the humidity decreases.

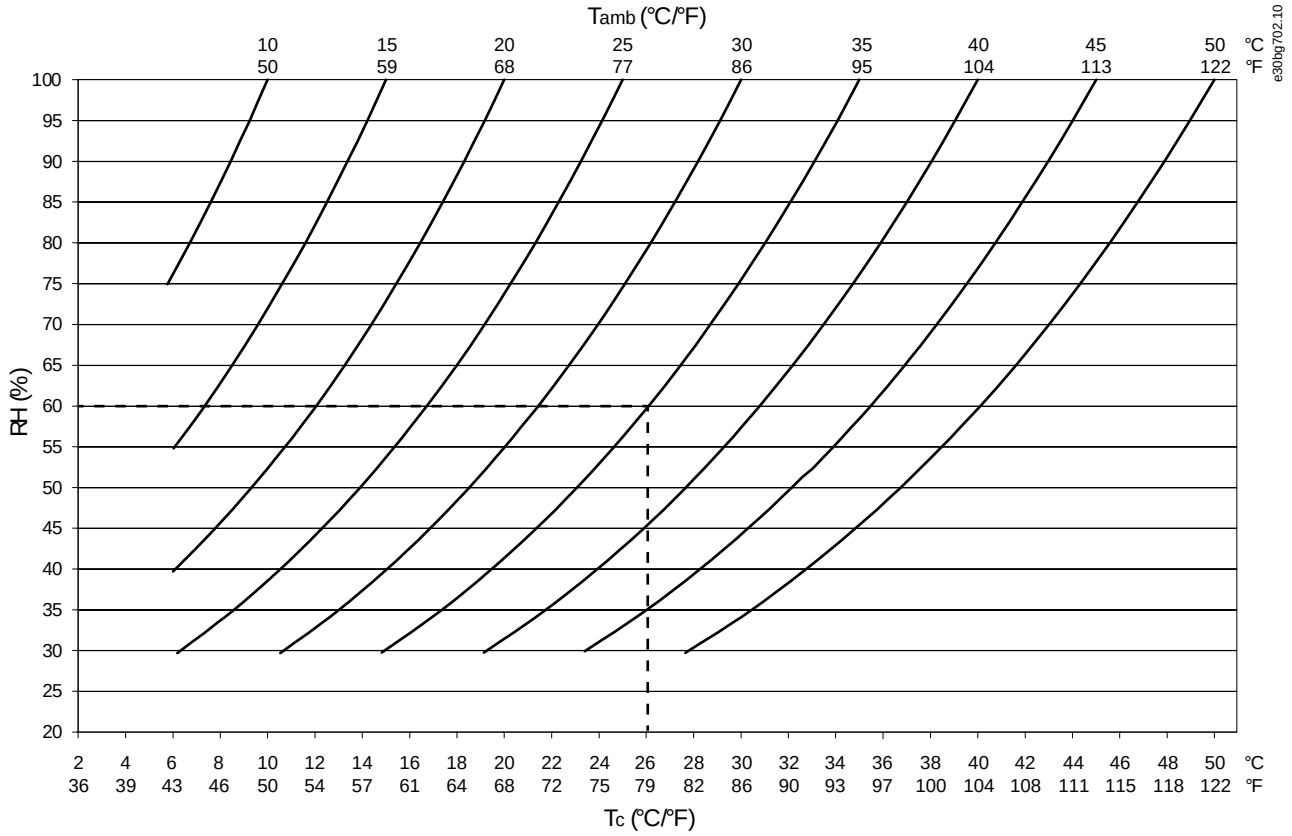

Illustration 11: Dew Point Diagram for Ambient Temperatures between +10°C...+50°C (+50°F...+122°F) at 1013 mbar (14.69 psi)

RH	Relative humidity	T_c	Primary circuit temperature
T_{amb}	Ambient temperature		

5.4.4 Cooling System

5.4.4.1 Materials

⚠ C A U T I O N ⚠

COPPER OR COPPER ALLOY PARTS DAMAGE THE SYSTEM

Using copper or copper alloy pipes or parts in contact with the cooling liquid damages the system.

- Do not use pipes made of copper or alloys that include copper. If metallic pipes are used in the cooling system, use aluminum or stainless steel pipes.

Allowed materials in the cooling system

These materials are allowed in the cooling system if they are compatible with the cooling liquid:

- Aluminum (EN-AW6060, EN-AW6063, or EN-AW6082)
- Stainless steel (AISI 304/316)
- Plastic*
- Elastomers (EPDM, NBR, FDM)*

* If plastic or elastomers are used, check material compatibility within the temperature range of the cooling liquid. See the specifications in 11.2.6 Cooling.

Do not use PVC, copper, brass, or other materials not compatible with the heat sink material or cooling liquid.

Recommended material for pipes

- PA11
- PA12
- PEX with oxygen barrier
- PEX-AL-PEX

The electrical resistance of the plastic and rubber pipes must be $>10^9$ Ω.

5.4.4.2 Cooling System Overview

The cooling system has a bypass valve in the primary line and valves at each power module inlet. They make it possible to open and clean the cooling system. Open the bypass valve and close the valves to the AC drive when cleaning the system. While commissioning the system, close the bypass valve and open the valves to the AC drive.

The cooling system has temperature, pressure, and leak supervision. They can be connected to the External fault digital input function. If the cooling liquid flow or pressure is too low, the temperature too high or of there is a leak, the supervision stops the drive.

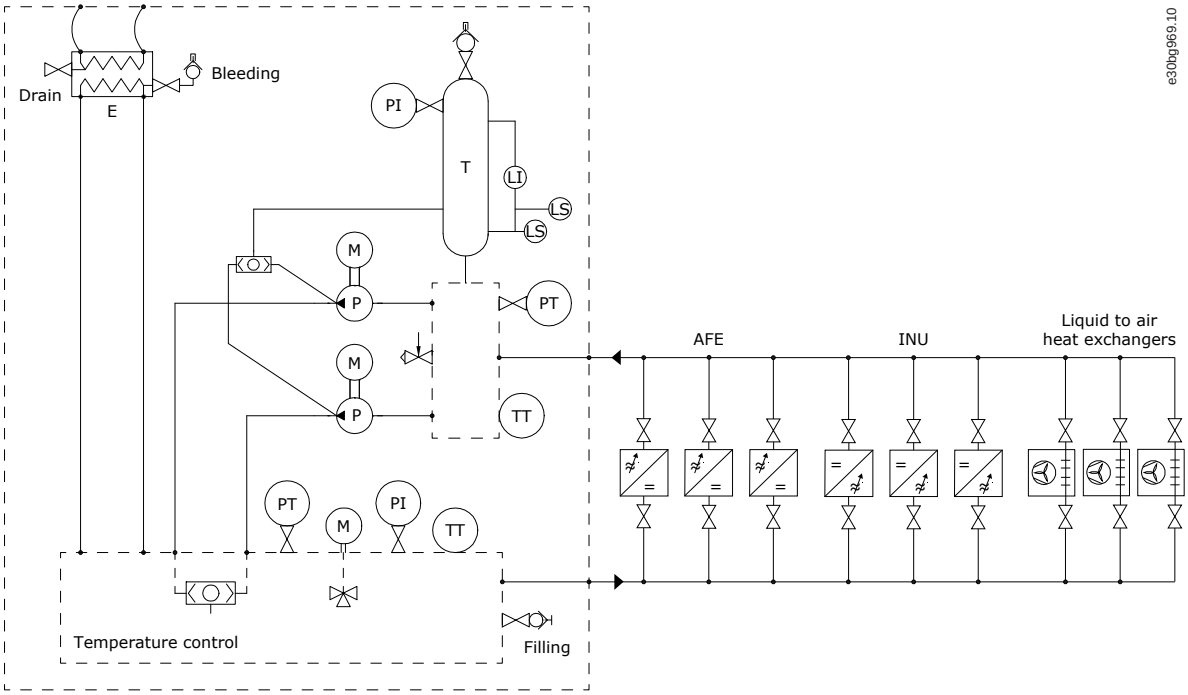

Illustration 12: The Cooling System of the VACON® 3000 Enclosed Drive

E	Heat exchanger	PI	Pressure indication
LI	Level indication	PT	Pressure transmitter
LS	Level switch	T	Tank
M	Motor	TT	Temperature transmitter
P	Pump		

5.4.4.3 Cooling Connections to the Enclosed Drive

Connect the cooling pipes to the heat exchanger at the top on the right side of the cabinet. See the locations of the input and output pipe connections in Illustration 13.

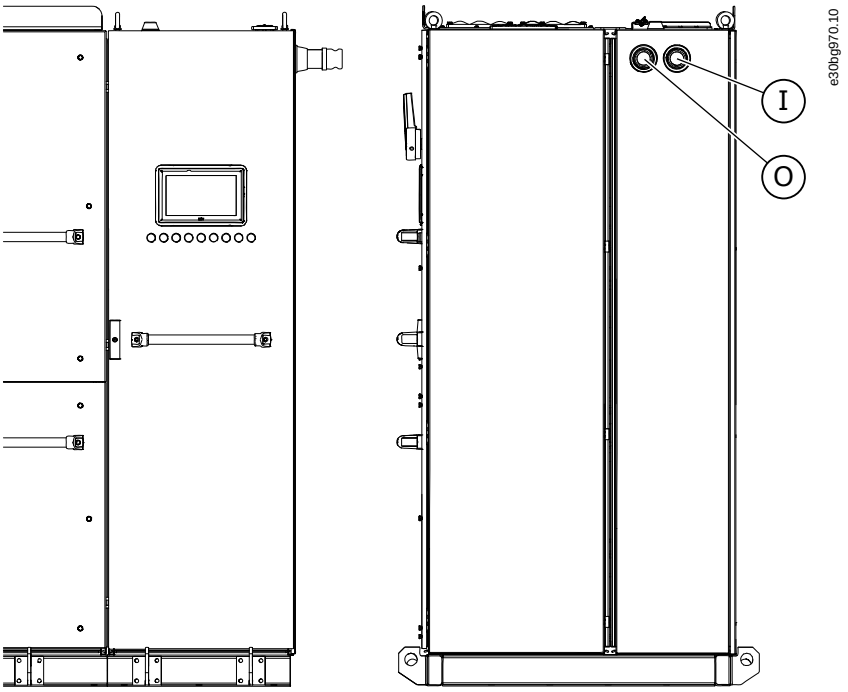

Illustration 13: Locations of the Cooling Connections

I	Cooling liquid input
O	Cooling liquid output

5.5 Cooling and Free Space Around the Enclosed Drive

The VACON® 3000 Enclosed Drive is a liquid-cooled AC drive, but in a liquid-cooled drive system, there are always some heat losses to the air. The heat losses come from

- busbars,
- filters,
- inductors,
- other auxiliary components.

The AC drive uses liquid-to-air heat exchangers to cool the hot air from the inductors and other components. Fans in the cabinet walls move the air between the cabinet sections. The structure of the cabinet is such, that the air can move freely through the cabinet.

There must be a minimum of 20 cm (7.87 in) of space above the cabinet without structures that can stop the airflow. Make sure that the hot air goes out of the cabinet and does not come back into the cabinet. Some free space in front of the drive is also necessary for maintenance.

The power loss of the AC drive can change significantly, when the load, the output frequency or the switching frequency changes. It is useful to know the power loss, when planning the cooling equipment in an electrical room.

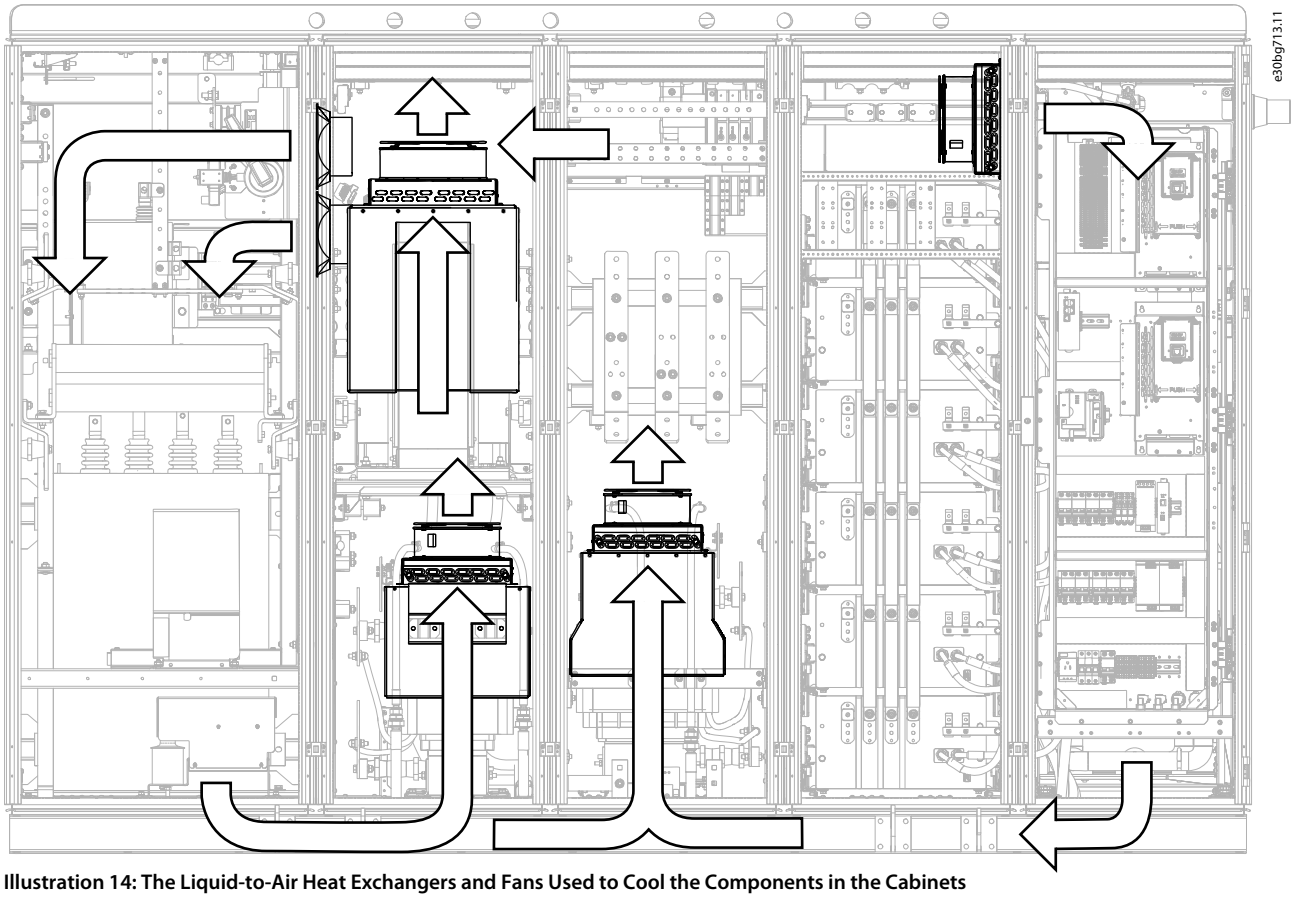

Illustration 14: The Liquid-to-Air Heat Exchangers and Fans Used to Cool the Components in the Cabinets

6 Electrical Installation

6.1 Galvanic Isolation Between the MV and LV Sections

There is galvanic isolation between the low-voltage (LV) and medium-voltage (MV) sections of the cabinet. The insulation between the sections gives the devices in the LV section protection from the MV section voltages. Illustration 15 shows which components are installed in the MV and LV sections.

All connections between the LV and MV sections are done with optical fiber cables. The only LV connections between the MV and LV sections are:

- The LV supply for the pre-charge unit (PRC)
- The LV supply for the isolation transformer (AIT)
- The supply voltage feedback from the potential transformer (PTR) to the AFE control unit

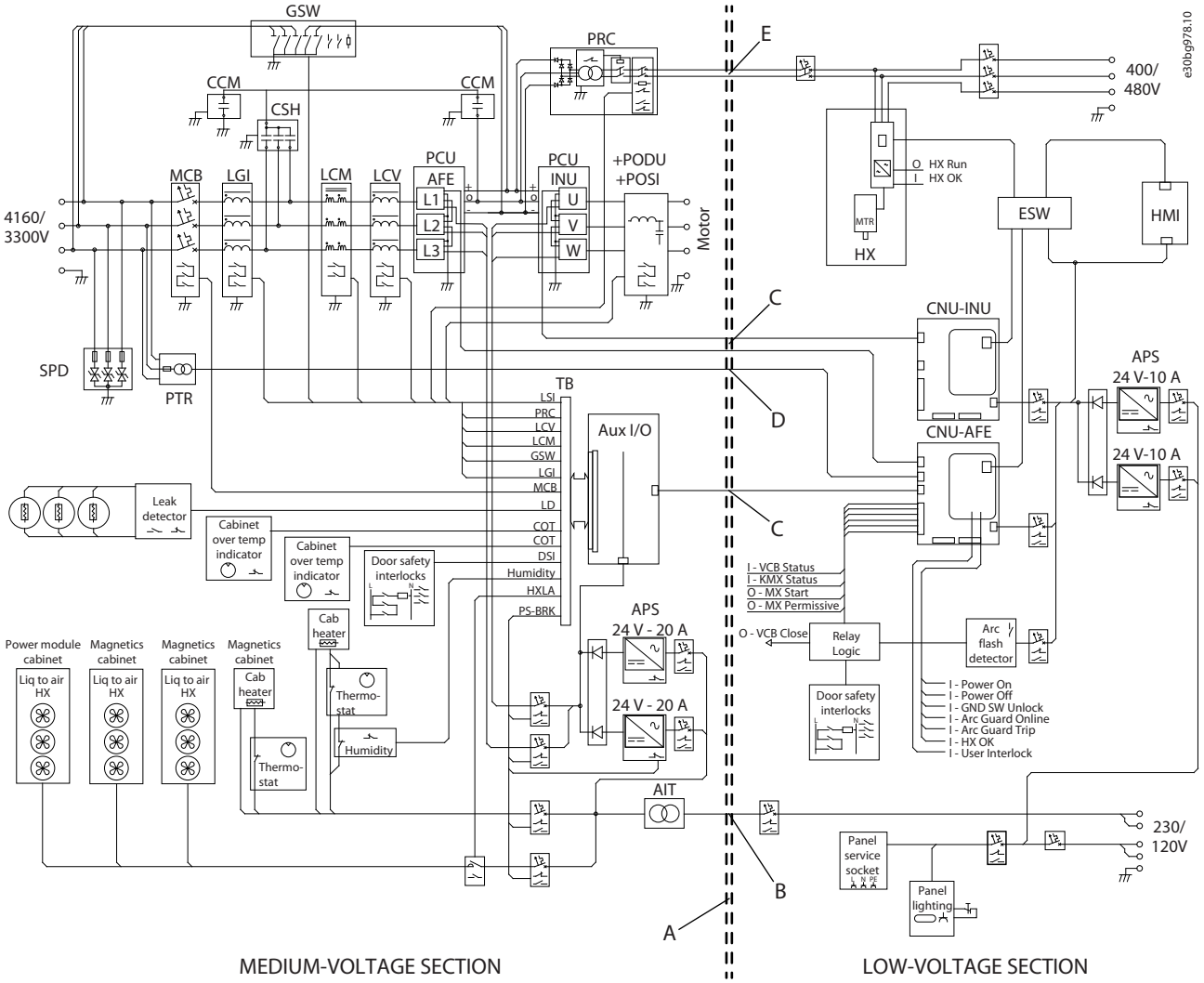

Illustration 15: Connections between the MV and LV Sections of the Cabinet

A	Galvanic isolation between the MV and LV sections	D	Supply voltage feedback from the potential transformer (PTR) to the AFE control unit
B	LV supply for the isolation transformer (AIT)	E	LV supply for the pre-charge unit (PRC)
C	Optical fiber connections		

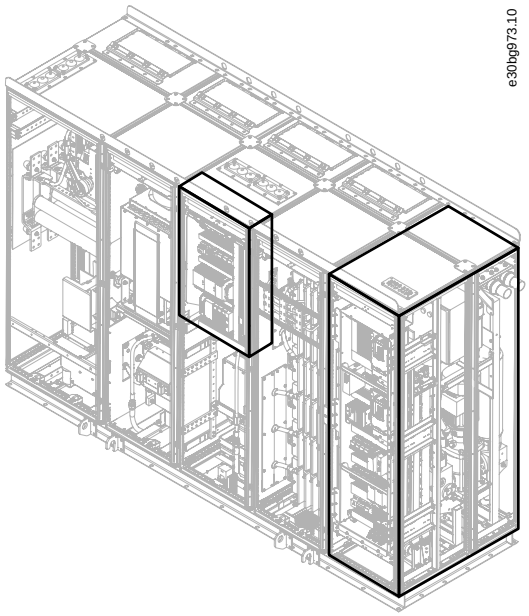

Illustration 16: Locations of the Low-Voltage Sections in the VACON® 3000 Enclosed Drive

6.2 Mains and Motor Cable Selection

⚠ C A U T I O N ⚠

UNEQUAL LOAD

If the cable installation is not symmetrical, unequal load can occur in AC drives with parallel inputs or outputs. The unequal load can decrease loadability or damage the drive.

- In drives with parallel inputs or outputs, make sure that the cable size, cable length, cable type, and routing is the same for all parallel cables.

Use cables with a nominal voltage U_0/U of 3.6/6 kV and maximum voltage 7.2 kV. The size and type of the cable depends on the application of the drive. The cable size is also affected by:

- The current at continuous load,
- the permitted short-circuit current,
- the installation conditions.

To decrease EMI, use shielded 3-phase cables for the motor connection. If single-core cables are used in the input or output, they must be shielded.

When selecting the cable, refer to the input voltage and the load current of the drive. Obey all applicable standards and local safety regulations.

Example

Mains Cables for the VACON® 3000 4160 V 510 A AFE Drive

The recommendation for the VACON® 3000 4160 V 510 A AFE drive, is to use two 240 mm^2 (500 kcmil) M2N type cables (available from Liban Cables/Nexans) for each phase. The cables are 3.6/6 kV copper cables with one core, XLPE insulation, a PVC cover, shielded, and unarmored.

6.3 Mains and Motor Cable Inlet and Termination

There are cable entries at the top and bottom of the cabinet sections for the mains and motor cables. If an output filter option is installed, cabling from the bottom is not possible.

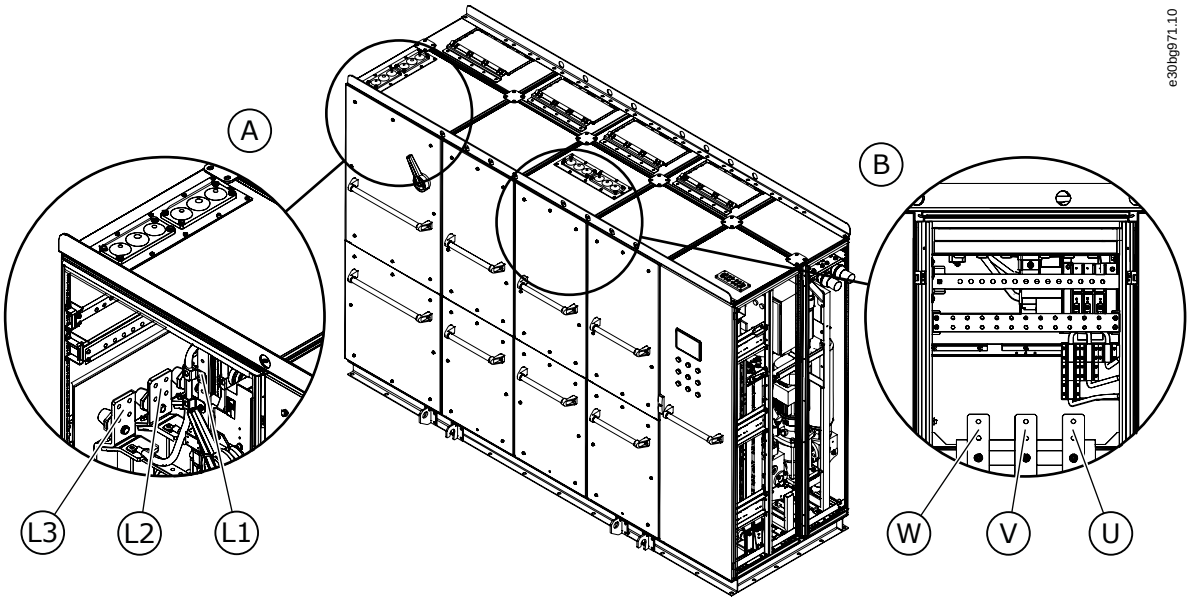

Illustration 17: The Mains and Motor Terminal Locations

A	The mains terminals (L1, L2, L3)
B	The motor terminals (U, V, W)

Connect the mains cables to terminals L1, L2, and L3 in the mains input section. Connect the motor cables to the inverter section terminals U, V, and W. Make openings for the cables in the grommets on the bottom or top of the cabinet and push through the cables. Use cable clamps to attach the cables. Always connect the PE conductors of the mains and motor cables to the PE busbar.

In units with parallel motor outputs, do not connect the motor cables together in the AC drive end. Always connect the parallel motor cables together in the motor end only. The minimum motor cable length is 5 m (16.4 ft).

Use medium-voltage cable lugs to connect the cables to the busbar terminals. Use heat shrink or cold shrink cable termination kits on the cables, for example, the kits HIT1.1204L or CIT1.1204L available from Ensto.

The output cables to the motor must be 360° EMC grounded, for example, by installing EMC grounding clamps at the cable inlet. To make a 360° connection with the grounding clamps and the cable shield, strip the cables. The EMC grounding clamps must be the correct size to give a 360° contact with the cable shield.

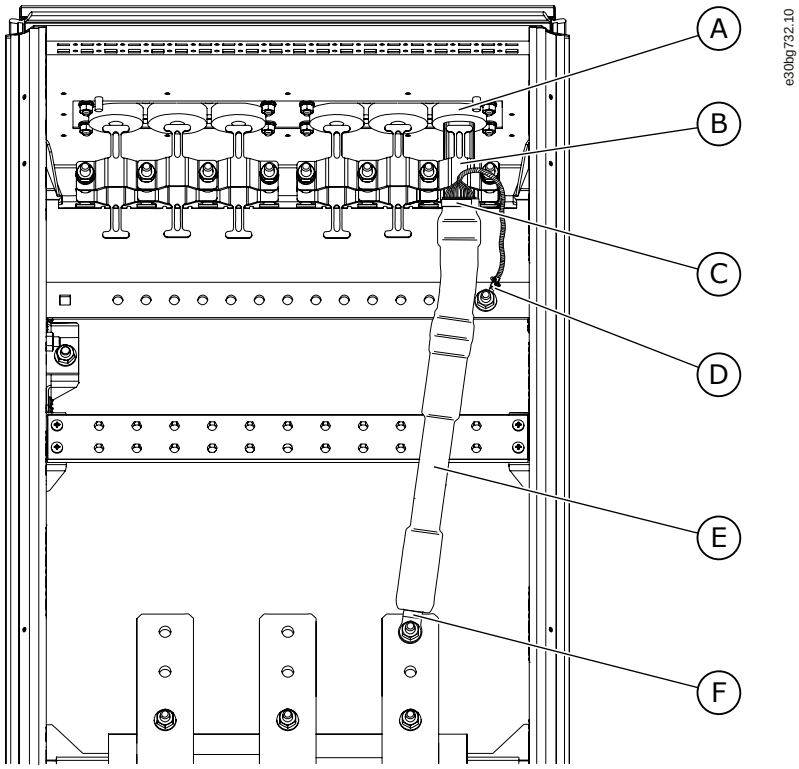

Illustration 18: Example of a 1-phase Motor Cable Inlet to the Cabinet

A	Cable grommet	D	PE busbar
B	Cable clamp	E	Cable termination
C	360° EMC grounding	F	Cable lug

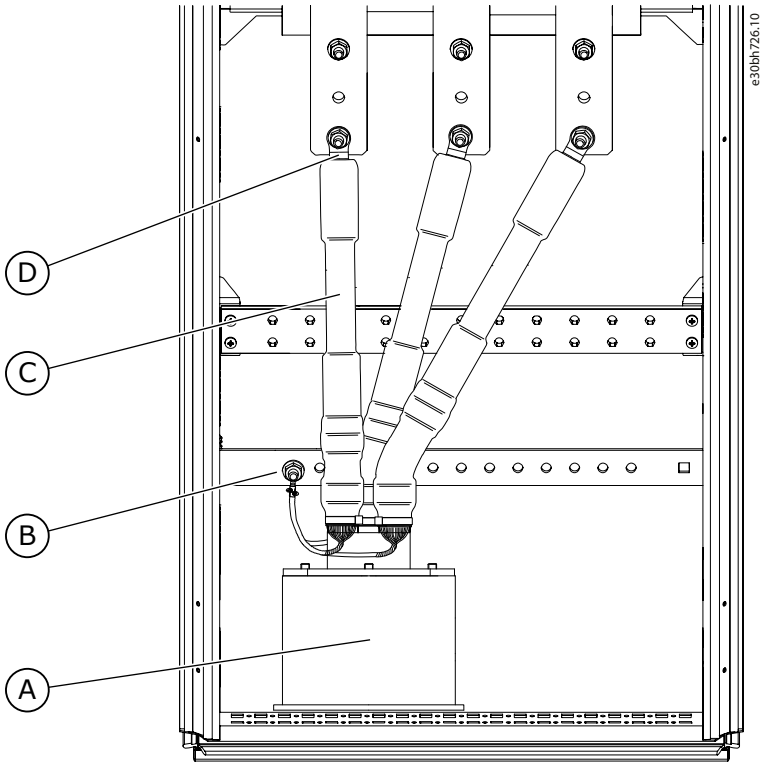

Illustration 19: Example of a 3-phase Motor Cable Inlet to the Cabinet

A	Cable entry seal with 360° EMC grounding	C	Cable termination
B	PE busbar	D	Cable lug

6.4 Grounding

Ground the AC drive in accordance with applicable standards and directives.

In the specified ground fault conditions, the current density in the grounding conductor, if of copper, must not be more than:

- 200 A/mm^2 for a short circuit of 1 s, and
- 125 A/mm^2 for a short circuit of 3 s.

But, the cross-sectional area of the grounding conductor must not be less than 30 mm^2 (AWG2). Refer to IEC62271-200.

There is a protective earthing (PE) busbar at the bottom front of the cabinets. Connect the PE rail to an external ground at the installation location as is approved in the applicable regulations. Obey the local regulations on the minimum size of the protective earthing conductor.

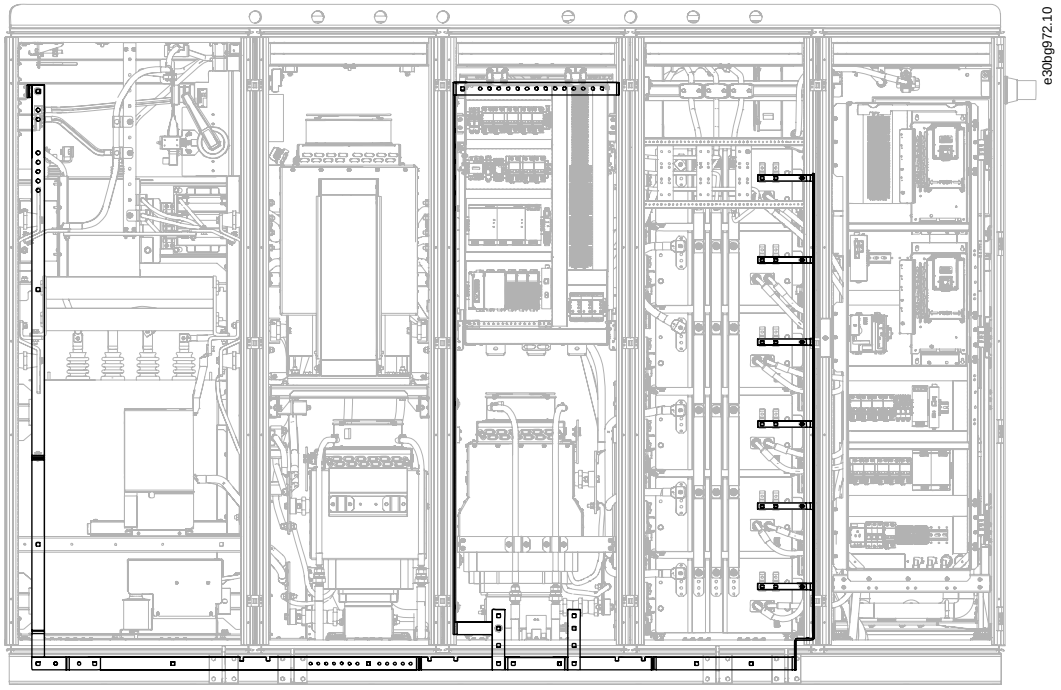

Illustration 20: The Grounding Busbar

The power module grounding terminals, the DC link neutral point, the grounding switch, and the transient voltage suppressors are connected to the PE rail. Also the frames of the inductors and capacitors are grounded.

Always connect the PE conductors of the mains and motor cables to the PE busbar. The output cables to the motor must be 360° EMC grounded. To make a 360° connection with the grounding clamps and the cable shield, strip the cables. Ground the motor cable shield at the drive and motor ends of the cable.

6.4.1 Standard Grounding Configurations

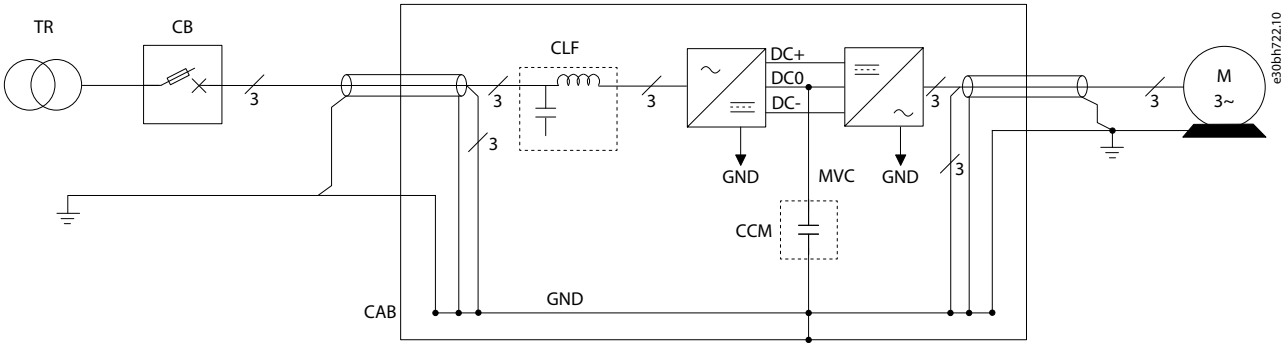

Illustration 21: Grounding of Transformer-Isolated Drives

CAB	Drive cabinet frame	GND	Grounding busbar
CB	MV circuit breaker **or** fused contactor	M	MV motor
CCM	Grounding capacitor	MVC	MV cable
CLF	CL filter	TR	MV transformer (secondary side ungrounded)

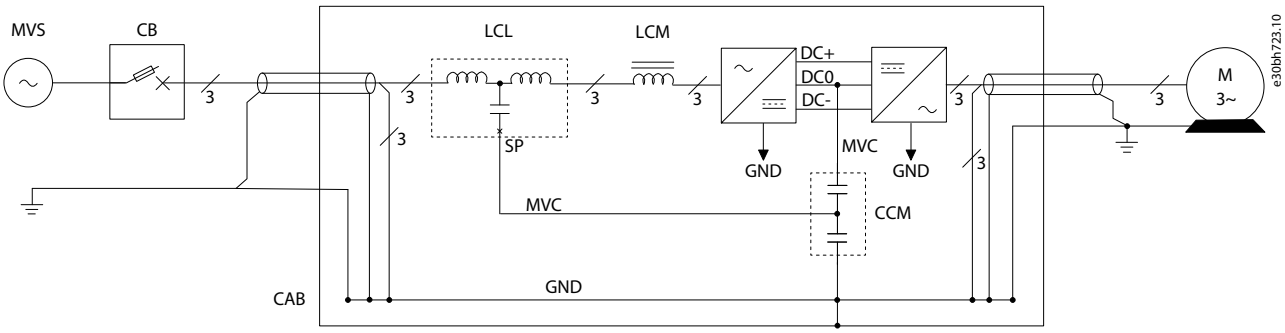

Illustration 22: Grounding of Grid-Connected Drives

CAB	Drive cabinet frame	LCM	Common-mode inductor
CB	MV circuit breaker **or** fused contactor	M	MV motor
CCM	Common-mode capacitor network (used in grid-connected systems only)	MVC	MV cable
GND	Grounding busbar	MVS	MV source (ungrounded or impedance grounded only)
LCL	LCL filter	SP	Star point of shunt capacitor

6.5 Additional Instructions for Cable Installation

- Before starting the installation, make sure that none of the components of the AC drive is live. Read carefully the warnings in the Safety section.
- Make sure that the motor cables are sufficiently far from other cables.
- The motor cables must go across other cables at an angle of 90°.
- If it is possible, do not put the motor cables in long parallel lines with other cables.
- Only use symmetrically EMC shielded motor cables.
- Make sure that there is sufficient clearance (approximately 25 mm/1 in) between the cables in the cabinet and between the cables and conductor materials.
- If cable insulation checks are necessary, see 8.5.2 Measuring the Cable and Motor Insulation.

6.6 Main Circuit Breaker Installation

Install a main circuit breaker for the short-circuit protection of the AC drive. Use, for example, a fast vacuum circuit breaker. When selecting the size of the mains circuit breaker, refer to the available short circuit power, continuous current, and supply voltage.

The VACON® 3000 AFE drive has a maximum short-circuit current of 31.5 kA. The operation time of the circuit breaker must not be longer than 4 cycles (50 Hz: 80 ms, 60 Hz: 67 ms).

The function of the circuit breaker is to give short-circuit protection. For ground fault protection, install a protection relay and resistors.

See also 2.5 Main Circuit Breaker.

N O T I C E

CONNECTION TO ARC FLASH PROTECTION

Connect the circuit breaker to the arc flash detection system in the AC drive cabinet.

6.7 Cabling of the Power Modules

6.7.1 Phase Module L20/L30 Terminals

To make access and installation easy, all terminals are located in the front of the phase modules. Phase, DC, neutral, and ground terminals have sufficient space between them and creepage walls on each side. To make the terminals compatible with different cable lugs, the terminals can be changed by removing screws from the front.

See the functions of the AFE/INU phase module terminals in Illustration 23. If the phase module operates as an AFE or INU, some of the terminals have different functions.

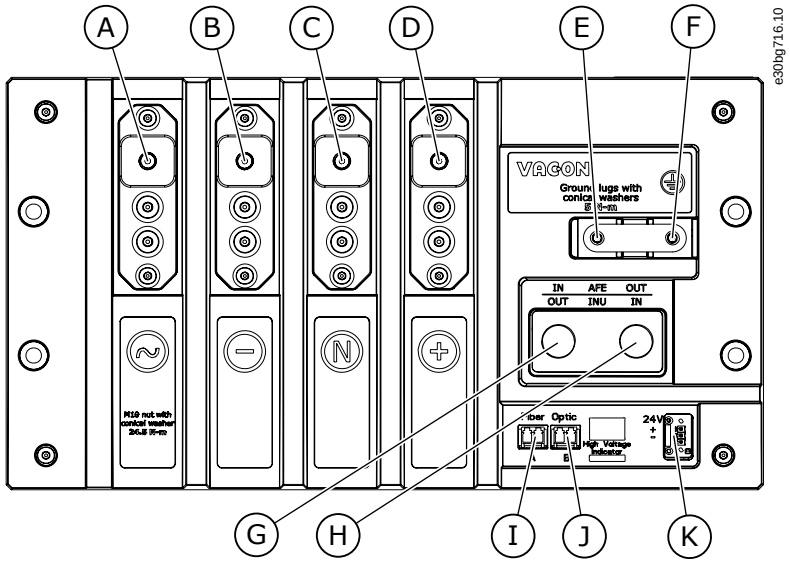

Illustration 23: AFE/INU Phase Module Terminals

A	~, phase input (AFE) / motor output (INU), size M10	G	Cooling liquid terminal in (AFE) / out (INU)
B	- , DC minus, size M10	H	Cooling liquid terminal in (INU) / out (AFE)
C	0, DC link neutral point, size M10	I	Optical fiber A
D	+, DC plus, size M10	J	Optical fiber B
E	Heat sink terminal, size M6	K	24 V supply for control
F	Ground terminal, size M6		

6.7.2 DFE Power Module Terminals

In the DFE power module, all terminals are at the front of the module, except the AC input terminals, which are at the back of the module. DC, neutral, and ground terminals have sufficient space between them and creepage walls on each side. To make the DC

terminals compatible with different cable lugs, the terminals can be changed by removing screws from the front. The AC terminals have knife type busbar connections for 10 mm (0.39 in) thick busbars.

The functions and locations of the DFE power module terminals are shown in Illustration 24.

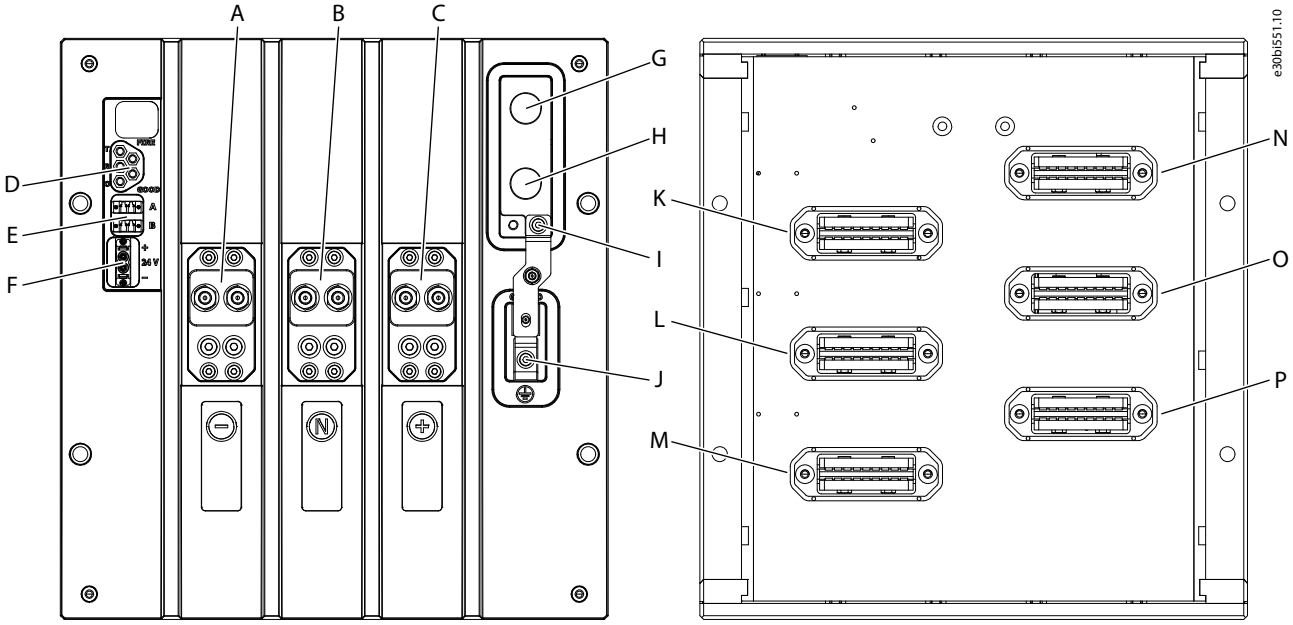

Illustration 24: Terminals in the Front (left) and Back (right) of the DFE Power Module

A	- , DC minus, size M10	I	Heat sink terminal, size M6
B	N, DC neutral, size M10	J	Ground terminal, size M6
C	+, DC plus, size M10	K	1L1, phase input
D	Optical fibers	L	1L2, phase input
E	Optical fibers A and B	M	1L3, phase input
F	24 V supply	N	2L1, phase input
G	Cooling liquid terminal in	O	2L2, phase input
H	Cooling liquid terminal out	P	2L3, phase input

6.7.2.1 DFE Control Terminals

The DFE power module has specific terminals for controlling the crowbar circuit in the module. Optical fiber terminals A and B are for Powerbus connection to the auxiliary I/O board.

The optical crowbar circuit control connectors:

- T: Crowbar TX
- R: Crowbar RX
- O: Crowbar fire out
- FIRE: External crowbar fire in
- GOOD: Main circuit breaker enable out

N O T I C E

To avoid unintentional crowbar firing, protect unused optical connectors with matching covers.

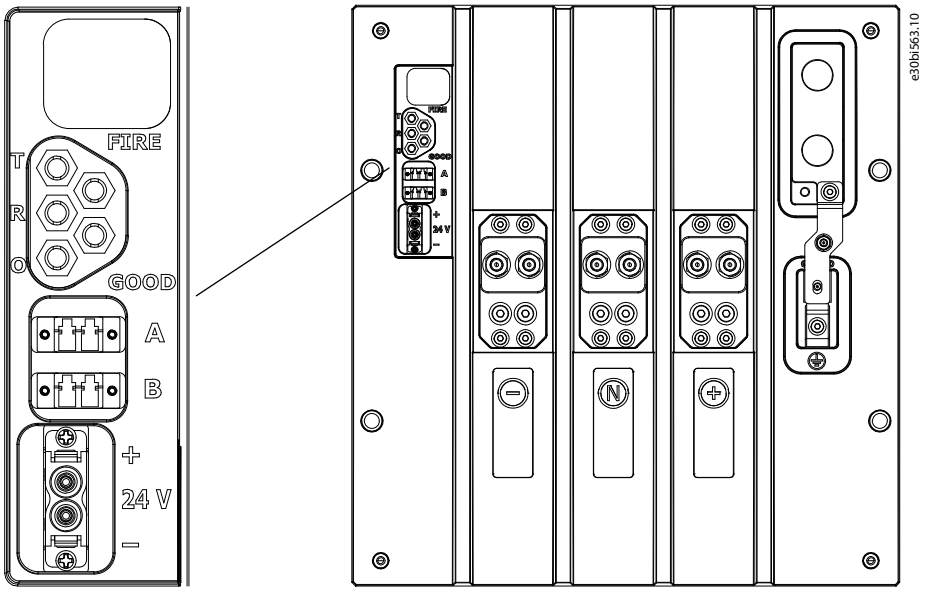

Illustration 25: Control Terminals of the DFE Power module

6.7.3 Power Module Grounding

⚠ C A U T I O N ⚠

GROUNDING THE HEAT SINK

- In the power modules, do not remove the grounding jumper between the heat sink terminal and the ground terminal.

Ground all the power modules. Also the heat sinks of all power modules must be grounded. Make sure that the grounding jumper is connected between the heat sink terminal and the ground terminal (see Illustration 26).

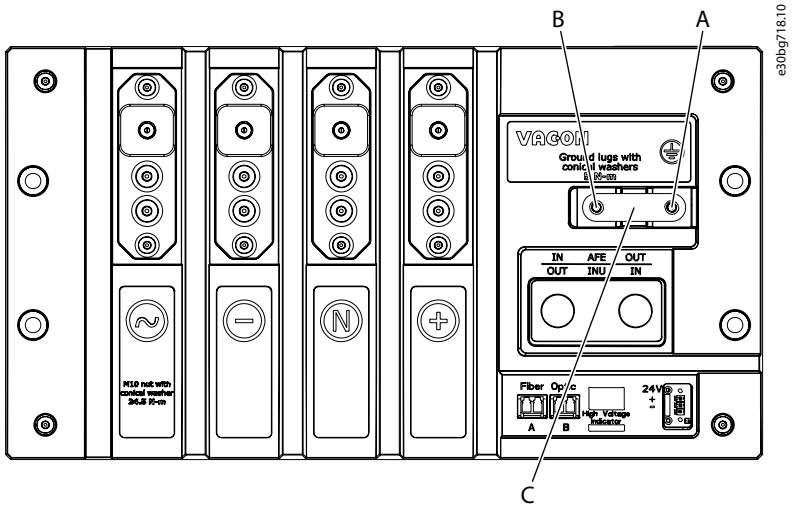

Illustration 26: AFE/INU Phase Module Grounding Terminals and Jumper

A	Grounding terminal	C	Heat sink grounding jumper
B	Heat sink terminal		

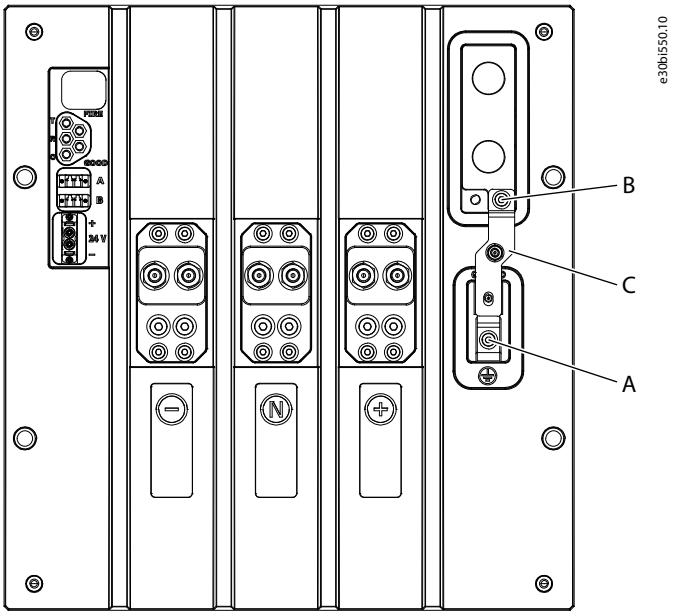

Illustration 27: DFE Power Module Grounding Terminals and Jumper

A	Grounding terminal	C	Heat sink grounding jumper
B	Heat sink terminal		

Use a busbar to connect all the grounding terminals of the phase modules and power modules to the same grounding busbar. See the example in Illustration 28.

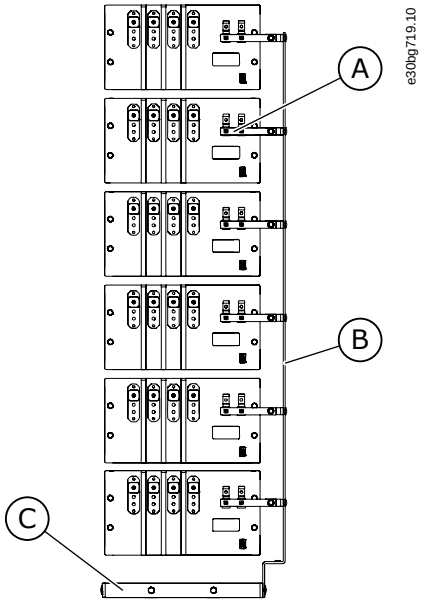

Illustration 28: Phase Module Grounding Connection Busbar Example

A	Grounding terminals	C	Grounding busbar
B	Grounding connection busbar		

6.7.4 DC-Link Connections

The VACON® 3000 power modules and DC capacitors for DFE have three DC terminals: plus (+), minus (-) and neutral (N).

Busbars or cables can be used to make the DC-link connections.

DC-link connections in AFE drives

- Connect the output DC terminals of the AFE phase modules to the DC-input terminals of the INU phase modules.
- Connect the DC-plus terminals of the phase modules together and the DC-minus terminals of the phase modules together.
- Connect the DC-link neutral points of the phase modules and ground them through the common-mode capacitor (CCM).
- See circuit diagram A in Illustration 29.

DC-link connections in 12-pulse drives

- Connect the output DC terminals of the DFE power module to the plus (+), minus (-), and neutral (N) terminals of the DC capacitor for DFE (CDC).
- Connect the DC terminals of the INU phase modules to the plus (+), minus (-), and neutral (N) terminals of the CDC.
- Ground the DC-link neutral point through the common-mode capacitor (CCM).
- See circuit diagram B in Illustration 29.

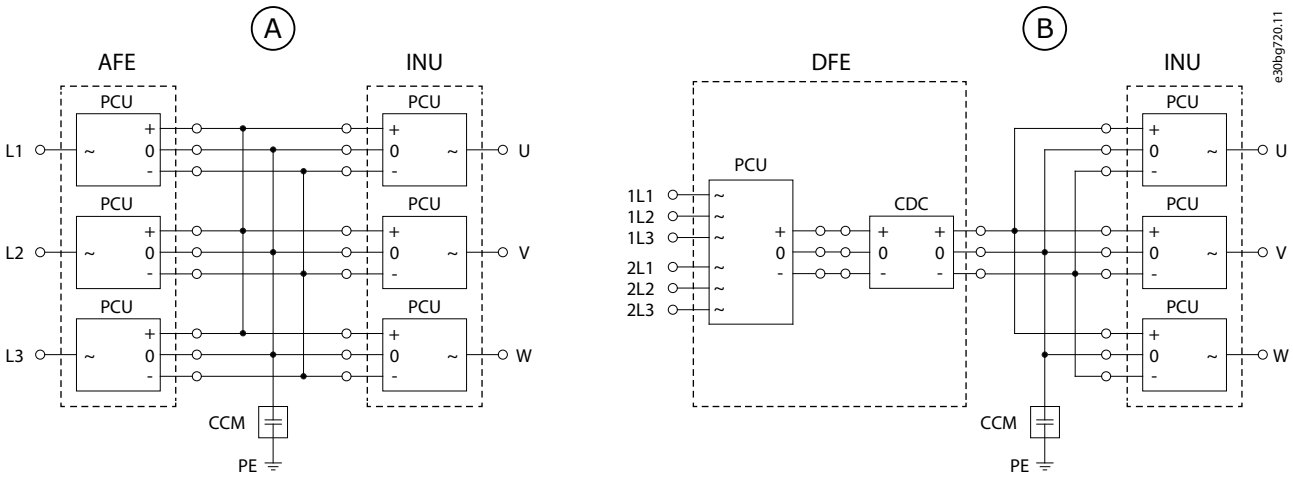

Illustration 29: DC-Link Connections in VACON® 3000 Drives

A	AFE drive
B	12-pulse drive

DC-link connections in VACON® 3000 drives with parallel power circuits

- Connect the plus, minus, and neutral terminals of the parallel DC links.
- See the circuit diagrams in Illustration 30.

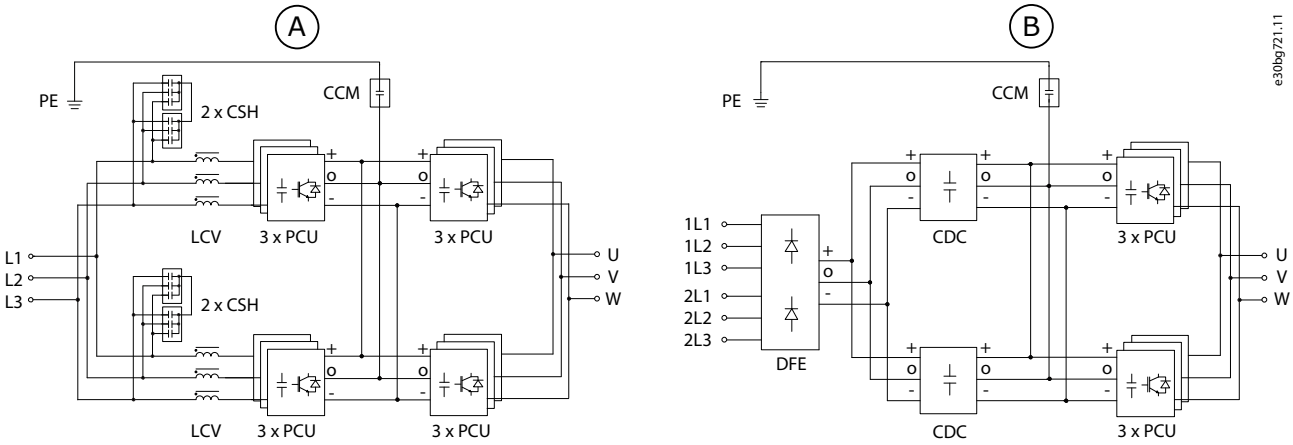

Illustration 30: DC-Link Connection Examples for VACON® 3000 Drives with Parallel Power Circuits

A	AFE drive
B	12-pulse drive

6.7.5 Brake Chopper Installation

The brake chopper module is an L20 or L30 phase module. Thus, the electrical and control interface is the same as in AFE and INU phase modules. See 6.7.1 Phase Module L20/L30 Terminals.

- Ground the brake chopper module in the same way as the other power modules. See 6.7.3 Power Module Grounding.
- Make the DC-link connections in the same way as for the INU phase modules. See 6.7.4 DC-Link Connections.

Brake resistor connections

- Connect the brake resistor between the output terminal (~) of the brake chopper unit (+DBCU) and the DC-link neutral point.

The brake resistor is not included in the brake chopper option (+DBCU) delivery. The resistor can be ordered with a separate order code.

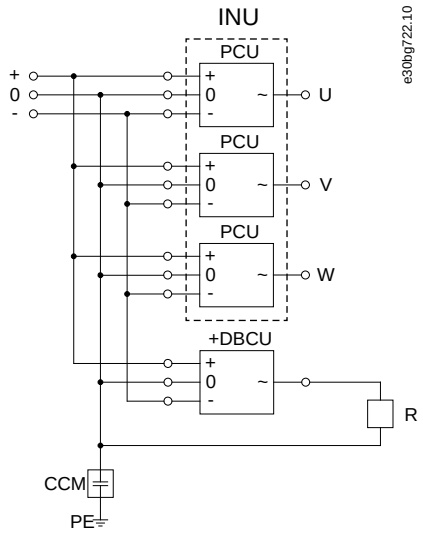

Illustration 31: DC-Link and Brake Resistor Connections of the Brake Chopper Unit

R	Brake resistor

6.7.6 Terminal Screw Tightening Torque Specifications

Table 7: Power Module Terminal Screw Tightening Torque Specifications

Terminal	Size	Tightening Torque
Power terminals	M10	24.5 Nm (217 lb-in)
Ground terminals	M6	5 Nm (44 lb-in)

6.7.7 LED Display on the Phase Module

⚠ D A N G E R ⚠

VOLTAGE INDICATION

The voltage indicators on the phase module are not safety approved. Even if the voltage indicators are off, there can be a dangerous voltage in the module. A contact with this voltage can lead to death or serious injury.

– Even if the voltage indicators are off, before touching the module:
Short circuit the DC-link terminals and connect them to ground.
Do measurements and make sure that there is no voltage.

In the front of the phase module, there is a four letter LED display and four LED indicators: BBP, BBN, LED1 and LED2. BBP and BBN show if there is voltage in the DC link plus and minus busbars. The functions of LED1 and LED2 are not set.

The LED indicators BBP and BBN use the power from the DC link to operate. That is, if the 24 V supply to the phase modules stops, the LEDs show if the DC link is charged. The LEDs are on when the capacitor DC-link half voltages are >500 V. They start to blink as the voltage drops to <500 V. If the voltages drop to <25 V, the LEDs turn off.

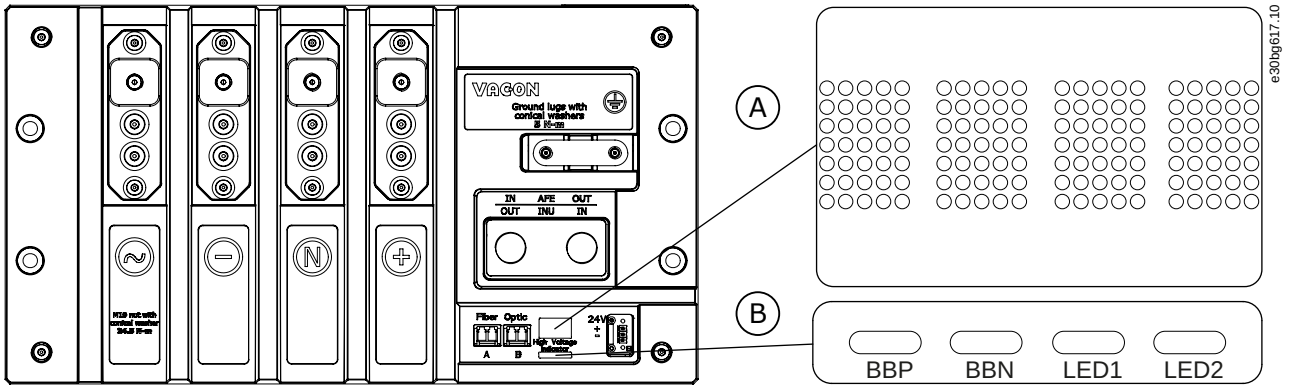

Illustration 32: LEDs in the front of the phase module

A	Four character LED display
B	LED indicators

LED Display Operation

The phase module start up sequence starts when the connection between the phase module and control unit is disconnected. Usually the start up occurs when 24 V DC is supplied to the module. Also, the start up sequence occurs during a software update.

LED display modes during phase module start up:

- 1. Reset mode: The display is empty.
- 2. Phase module software setup: The phase module sets up local software.
- 3. Phase module communication setup: After the software setup, the phase module enables communication to the control unit. When the phase module receives the first message from the control unit, the PCU moves to the next mode.
- 4. Control unit setup: Set up between the control unit and the phase module. If the setup is a success, the phase module moves to the next mode.
- 5. Network setup: The last step in the setup. When the phase module receives approval from the control unit, the phase module moves to the operation mode.
- 6. Operation: In the operation mode, the LED display view changes at an interval of 3 s. The display changes between the belt information indicator (6A) and the module information indicator (6B).

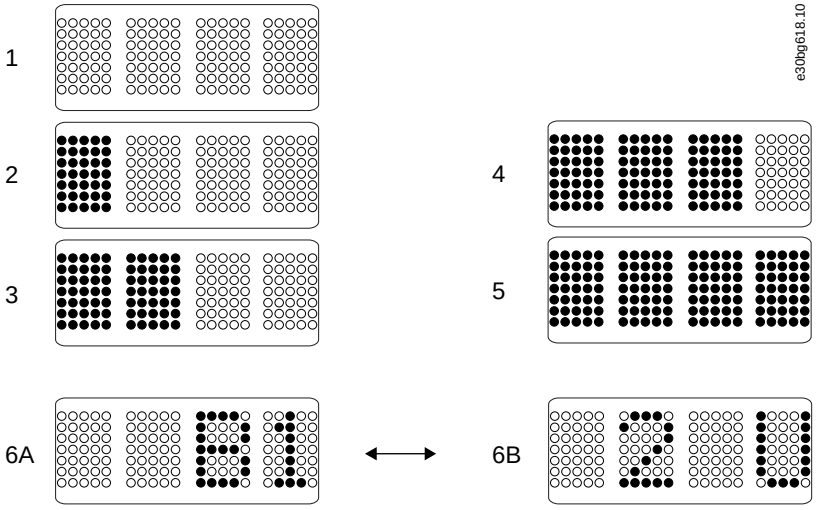

Illustration 33: LED Display Modes During Start Up

Belt information: The belt information indicator tells the number of the AFE or INU unit (or belt of three modules) in which the PCU is installed (see 7.8 Optical Fiber Connections).

The belt information indicator is of type: [ ] [ ] [B] [belt number 1–4].

- The first two digits are empty.
- The last two digits show the belt number (B1–B4).

Module information: The module information indicator tells the identification number of the PCU, the unit type (AFE/INU), and the phase of the module.

The module information indicator is of type: [PowerID N_] [PowerID _N] [L = AFE, 'blank' = INU] [1, 2, 3 for AFE; U, V, W for INU].

- The first two digits show the ID of the phase module.
- The last two digits show the phase.
  - AFE: L1, L2, or L3.
  - INU: _U, _V, or _W.
  - BCU: RA, RB, or RC.

The PowerID is a 2-digit identification number for each phase module. The ID can be mapped directly to the HMI fault source indication.

Belt and module information examples (see 6A/6B in Illustration 33):

- [ ] [ ] [B] [1] <-> [ ] [2] [ ] [U] = phase module ID 2, U phase INU in belt 1
- [ ] [ ] [B] [1] <-> [ ] [4] [ ] [W] = phase module ID 4, W phase INU in belt 1
- [ ] [ ] [B] [3] <-> [1] [0] [ ] [W] = phase module ID 10, W phase INU in belt 3
- [ ] [ ] [B] [1] <-> [ ] [2] [L] [1] = phase module ID 2, L1 phase AFE in belt 1
- [ ] [ ] [B] [1] <-> [ ] [4] [L] [3] = phase module ID 4, L3 phase AFE in belt 1

6.7.8 LED Display on the DFE Power Module

There is a four character LED display on the front of the DFE power module. The display functions in the same principle as the display on the phase modules, but the shown belt and module information is different. See 6.7.7 LED Display on the Phase Module.

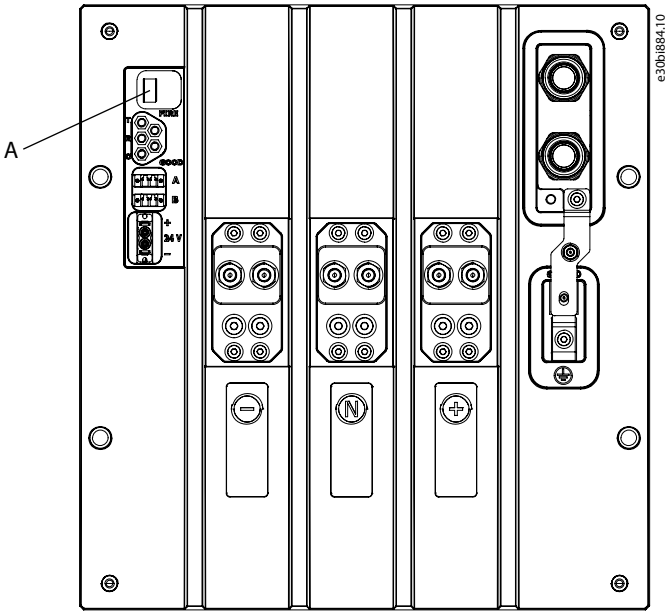

Illustration 34: LEDs on the Front of the DFE Power Module

A	Four character LED display

Belt information: The belt information indicator tells the number of the channel on the control unit to which the power module is connected, in this case C5 (see 7.8 Optical Fiber Connections).

The belt information indicator is of type: [ ] [ ] [C] [5].

- The first two digits are empty.
- The last two digits show the number of the channel.

Module information: The module information indicator tells the identification number of the power module. The number of the first installed DFE power module is 22, the second is 23, and so on.

The module information indicator is of type: [PowerID N_] [PowerID _N] [ ] [ ].

- The first two digits show the ID of the power module.
- The last two digits are empty.

6.8 Low-Voltage Power Supplies

6.8.1 Low-Voltage Power Supply Connections

Low-voltage power supplies are necessary for the auxiliary components of the VACON® 3000 Enclosed Drive.

- 3-phase 400/480 V, 50/60 Hz supply for the pre-charge unit and the heat exchanger unit. In drives with parallel power circuits, a separate pre-charge unit is necessary for each parallel circuit. The low-voltage supply to the pre-charge units must be able to supply a power of 10 kVA for each pre-charge unit.
- 1-phase 120 V, 50/60 Hz supply for the control units and auxiliary components in the LV section of the cabinet.
- 1-phase 120 V, 50/60 Hz supply for the auxiliary components in the MV section of the cabinet.

Make sure that the input AC voltage level selection for the pre-charge unit is correct.

Ground the cable shields of the LV supply cables.

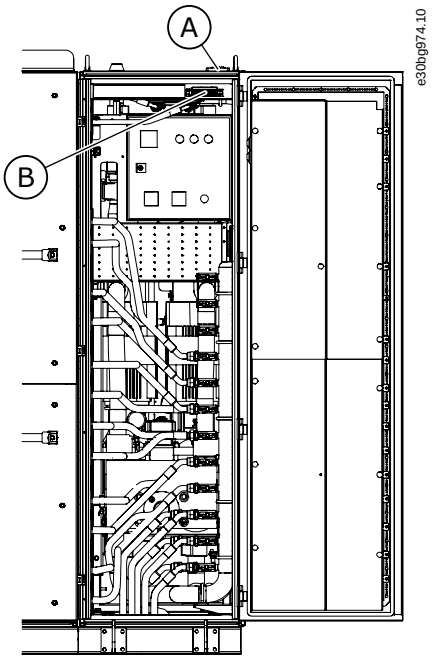

Illustration 35: The Location of the Low-Voltage Cable Entry and the Power Supply Connectors

A	Cable entry for low-voltage power supply cables.
B	Low-voltage power supply connectors.

6.8.2 Safety Notes for the Precharge Unit

⚠ D A N G E R ⚠

SHOCK HAZARD FROM THE PRECHARGE UNIT

The precharge unit can supply dangerous high voltages from its low-voltage source (215 V to 480 V AC). A contact with this voltage can lead to death or serious injury.

- Do not try to energize the precharge unit before the system installation is completed!
  Do not bypass the control unit and energize the precharge unit!
  Make sure that correct lock out and tag out procedures are applied to the low-voltage input of the precharge unit.

⚠ C A U T I O N ⚠

RISK OF OVERHEATING

Successive precharge operations can overheat the transformer of the precharge unit.

- To allow the transformer enough time to cool down, ensure a minimum of 30 minutes between successive precharge operations.

The correct selection of the voltage selection board prevents the application of incorrect voltage to the transformer input.

If there is a fault condition, the 2-pole circuit breaker on top of the precharge unit opens. The breaker opens only in fault conditions in which inspection or maintenance is necessary.

The control unit monitors the DC-link voltage during the precharge sequence and if it senses an unusual condition, stops the sequence. Because of the monitoring, do not bypass these protection steps during the commissioning or troubleshooting of the drive.

Precharge timeout:

- The control unit automatically limits the frequency of start ups to a safe value.

6.8.3 Location of the Precharge Unit

The precharge unit or units are typically installed at the top of the output section of the enclosed drive. The location can differ depending on the drive type and configuration.

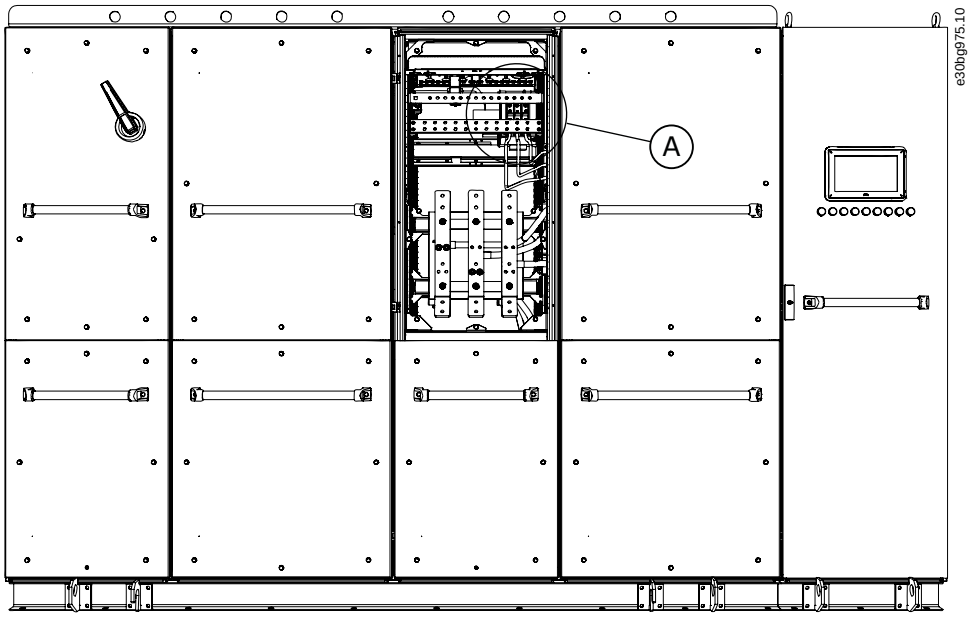

Illustration 36: The Location of the Precharge Unit

A	Precharge unit

6.9 Safety Functions

The information in this section is valid only if the drive is equipped with the STO option (+QSTO).

6.9.1 Safe Torque Off (STO)

Safe Torque Off (STO) is a hardware-based safety function to prevent the drive from generating torque on the motor shaft. The STO safety function has been designed for use in accordance with the following standards:

- EN 61800-5-2 STO SIL3
- ENISO 13849-1 PL “e” Category 4
- EN 62061 SILCL3
- IEC 61508 SIL3
- The function also corresponds to an uncontrolled stop in accordance with stop category 0, EN 60204-1.

The STO function is not the same as the prevention of unexpected start-up function. For fulfilling those requirements, more external components are required according to appropriate standards and application requirements. Required external components can be for example:

- Appropriate lockable switch
- A safety relay providing a reset function

6.9.2 Safe Stop 1 (SS1)

The SS1 safety function is realized in compliance with type C of the drives safety standard EN 61800-5-2 (Type C: "The PDS(SR) initiates the motor deceleration and initiates the STO function after an application specific time delay").

The SS1 safety function has been designed for use in accordance with the following standards:

- EN 61800-5-2 Safe Stop 1 (SS1) SIL3
- EN ISO 13849-1 PL"e" Category 4
- EN 62061: SILCL3
- IEC 61508 SIL3
- The function also corresponds to a controlled stop in accordance with the stop category 1, EN 60204-1.

6.9.3 Safety Considerations

Designing of safety-related systems requires special knowledge and skills. Only qualified personnel are permitted to install and set up the STO functionality.

The use of STO or other safety functions does not in itself ensure safety. An overall risk evaluation is required to make sure that the commissioned system is safe. The safety devices must be correctly incorporated into the entire system. The entire system must be designed in compliance with all relevant standards within the field of industry.

Standards such as EN 12100 (Part 1/Part 2) and ISO 14121-1 provide methods for designing safe machinery and for carrying out a risk assessment.

The information in this manual provides guidance on the use of the STO safety function together with the VACON® 3000 Enclosed Drive. This information is in compliance with accepted practice and regulations at the time of writing. However, the end product/system designer is responsible for ensuring that the system is safe and in compliance with relevant regulations.

The STO function does not electrically isolate the drive output from the mains supply. If electrical work is to be carried out on the drive, the motor or the motor cabling, the drive has to be isolated from the mains supply. Use, for example, an external medium-voltage disconnecting switch (optionally as part of the main circuit breaker, see 6.6 Main Circuit Breaker Installation). In addition, the grounding switch must be closed or an alternative grounding according to applicable standards must be provided (see 8.2 Operating the Grounding Switch).

6.9.3.1 Diagnostic Test

Performing a diagnostic test is mandatory. The achievable SIL performance level/category for STO/SS1 depends on the testing interval.

Table 8: SIL Performance Level/Category Based on Diagnostic Test Interval

Test/ diagnostic interval[1]	EN 61800-5-2	ENISO 13849-1	EN 62061
1 day	SIL3	PL “e” Category 4	SILCL3
3 months	SIL3	PL “e” Category 3	SILCL3
1 year	SIL2	PL “d” Category 3	SILCL2

[1] Time between tests.

To perform the test, follow this procedure.

- Start with a powered-on system. Connection to the MV grid is not required.
- Press S1 (STO/SS1 button).
- Wait until the STO diagnostic lamp is continuously on.
- Reset S1.
- If available, push reset button S2.
- The STO diagnostic lamp should go off, and the drive should be operational again after less than 1 minute.

Note: A diagnostic test is also automatically executed as part of any regular STO/SS1 cycle.

6.9.4 STO Operating Principle

The STO safety function allows the drive output to be disabled so that the drive cannot generate torque in the motor shaft.

The STO safety function is achieved by stopping the drive operation. The drive operation is stopped by removing the 24 V supply to the inverter units. When the 24 V supply is removed, the drive stops operation and does not generate torque in the motor shaft.

6.9.5 SS1 Operating Principle

After receiving a safe stop command, the motor starts decelerating and the SS1 safety function initiates the STO function after a user-set time delay.

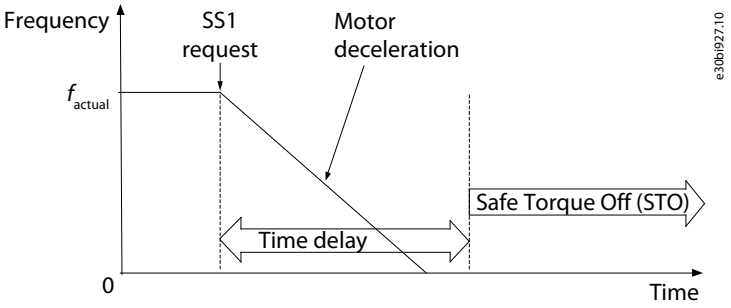

Illustration 37: The Principle of Safe Stop 1 (EN 61800-5-2, SS1 Type C)

The system designer/user is responsible for understanding and setting the time delay of the safety relay, as it is process/machine dependent.

- The time delay of the relay must be set to a greater value than the deceleration time of the drive. If there is a single failure or malfunctioning of the drive system, the drive may not ramp down as requested, but is always put to a safe STO state after the configured time delay of the relay. The motor deceleration time is process/machine dependent.
- The stop function of the drive must be correctly set for the process/machine. Activating the SS1 safety function must execute the configured stop in the drive, using the undelayed relay output signal "SS1 NOT ACTIVATED". In the application software, it is recommended to use the "Quick Stop" functionality for this purpose.

7 Control Connections

7.1 Control Interface

When the drive is connected to the mains, it must be possible to monitor the drive, reset faults, and set parameters to the drive without opening the cabinet. These actions can all be done with the door-mounted PLC touch screen.

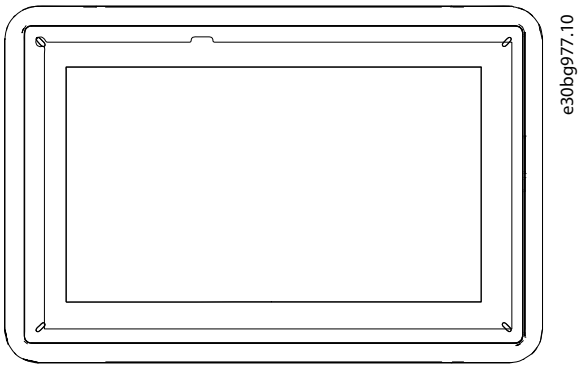

Illustration 38: PLC Touch Screen on the Cabinet Door

7.2 The Control Compartment of the Enclosed Drive

VACON® 3000 Enclosed Drive has a control compartment, a separate section which includes the control units and other auxiliary components. The components of the control compartment shown in Illustration 39 can differ depending on the drive type and configuration. For example, the AFE drive has two control units and the 12-pulse drive has one. Drives with the brake chopper option (+DBCU) also have a control unit for the brake chopper.

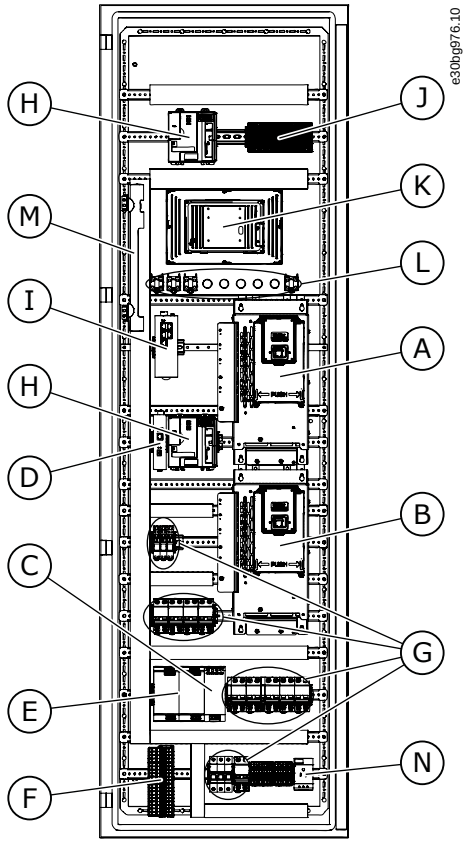

Illustration 39: Components in the Control Compartment

A	AFE control unit	H	PLC
B	INU control unit	I	Industrial Ethernet switch
C	Diode module for the 24 V power supplies	J	Terminals for the PLC
D	Fiber optic converter	K	PLC touch screen
E	24 V power supplies for the control units	L	Signal indicator lights and push buttons
F	Terminals for control connections and auxiliary devices	M	Cabinet light
G	MCBs and relays for the auxiliary devices	N	230 V socket

7.3 Control Unit Components

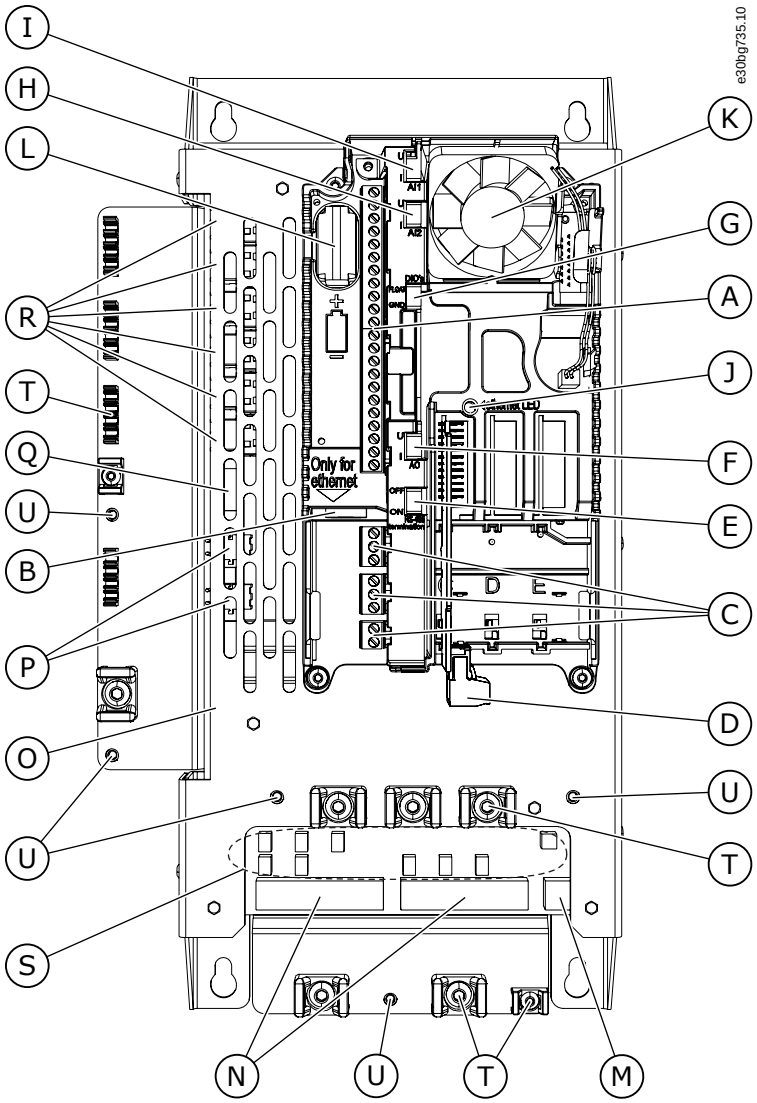

Illustration 40: The Components of the Control Unit

A	The control terminals for the default I/O connections
B	The Ethernet connection
C	The relay terminals for 3 relay outputs or 2 relay outputs and a thermistor
D	The option boards
E	DIP switch for the RS485 bus termination
F	DIP switch for the signal selection of analog output
G	DIP switch for the isolation of the digital inputs from ground
H	DIP switch for the signal selection of analog input 2
I	DIP switch for the signal selection of analog input 1
J	The status indicator of the Ethernet connection
K	Cooling fan
L	The battery for the real-time clock
M	Control unit power supply terminal
N	Encoder terminals (only used in INU control units)
O	Digital inputs and outputs for pre-charge
P	Optical fiber inputs for external breaker enable
Q	Supply voltage feedback
R	Optical fiber interface to phase modules
S	Encoder configuration jumpers
T	Cable clamps
U	Ground points

On delivery of the AC drive, the control unit contains the default control interface (control panel with graphical display). If special options were selected in the order, the option boards are included loose in the delivery. On the next pages, there is information on the terminals and general wiring examples.

The control unit can be started with a 24 V DC ±5%, 3 A power source with external overload protection. This voltage is sufficient to keep the control unit on and for setting the parameters. The measurements of the main circuit (for example, the DC-link voltage, and the unit temperature) are not available when the drive is not connected to the mains.

The status indicator on the control unit shows the status of the drive. The status indicator is on the control panel, below the keypad, and it can show five different statuses.

Table 9: Control Unit LED Status Definitions

Color/status of the LED	Status of the drive
Blinking slowly	Ready
Green	Run
Red	Fault
Orange	Alarm
Blinking fast	Downloading software

7.4 Control Unit Cabling

Install the control cables in the low-voltage section of the cabinet. Keep the cables away from high voltages and possible electrical arcs. Make the control connections between the control units and power units with optical fiber cables.

There are cable entries at the top and bottom of the cabinet.

A VACON® 3000 12-pulse drive has one control unit, the INU control unit. Install all the I/O and relay cables to the INU control unit.

A VACON® 3000 AFE drive has two control units, the AFE control unit and the INU control unit. The I/O and relay cable installation is application-specific and both the AFE and INU control units can be used.

7.4.1 Selection of the Control Cables

N O T I C E

CABLE SELECTION

Obey regional low-voltage standards in the cable selection.

The control cables must be a minimum of 0.5 mm^2 (AWG20) multi-core shielded cables. The terminal wires must be a maximum of 2.5 mm^2 (AWG13) for the relay board terminals and other terminals.

Table 10: The Tightening Torques of the Control Cables

Terminal	Terminal screw size	Tightening torque (Nm)	Tightening torque (lb-in)
All the terminals of the I/O board and the relay board	M3	0.5	4.5

7.4.2 Control Unit Terminals

Here is the basic description of the terminals of the default I/O and relay board. The standard I/O board has 22 fixed control terminals and 8 relay board terminals.

Some terminals are assigned for signals that have optional functions that can be used with the DIP switches. For more information, see 7.5 DIP Switches on the Control Unit.

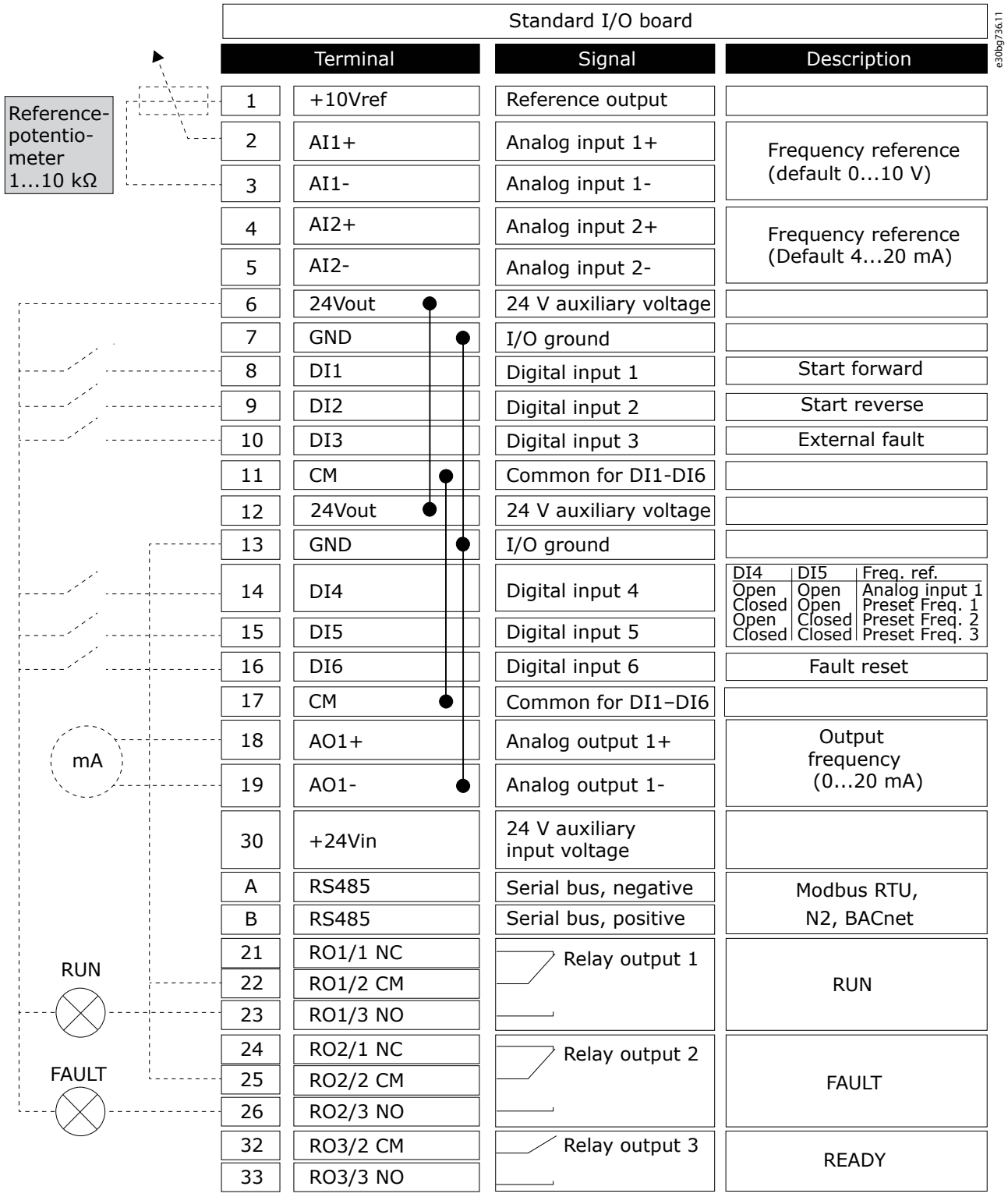

Illustration 41: The Signals of the Control Terminals on the Default I/O Board and the Default Control Connections for the VACON® 3000 INU Application

7.5 DIP Switches on the Control Unit

7.5.1 Selection of Terminal Functions with DIP Switches

Two selections for specified terminals can be done with the DIP switches. The switches have two positions: up and down. See the location of the DIP switches and the possible selections in Illustration 42.

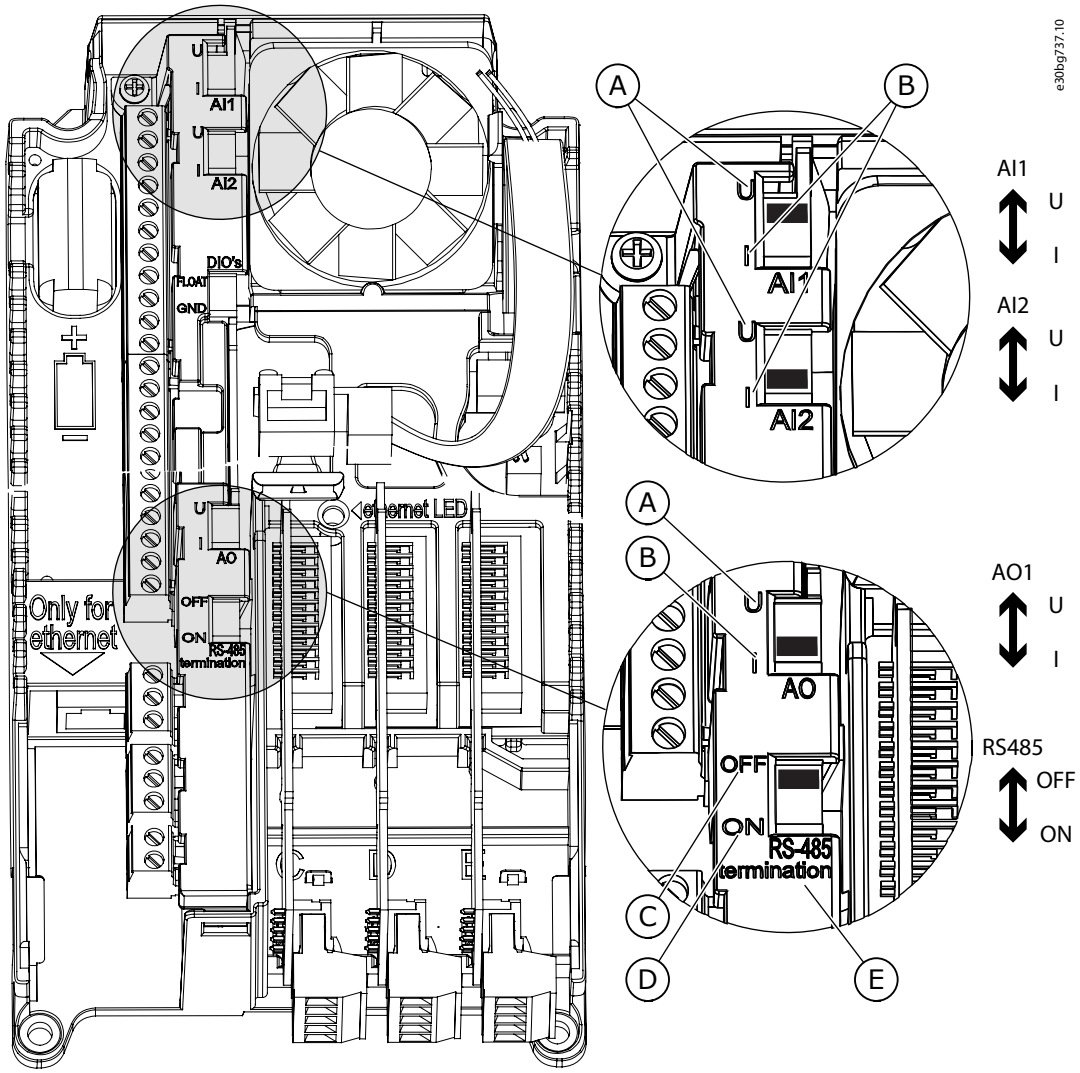

Illustration 42: The Selections of the DIP Switches

A	The voltage signal (U), 0–10 V input	D	ON
B	The current signal (I), 0–20 mA input	E	The RS485 bus termination
C	OFF		

Table 11: The Default Positions of the DIP Switches

The DIP switch	The default position
AI1	U
AI2	I
AO1	I
RS485 bus termination	OFF

7.5.2 Isolation of the Digital Inputs from Ground

It is possible to isolate from ground the digital inputs (terminals 8–10 and 14–16) on the standard I/O board. To do this, change the position of a DIP switch on the control board.

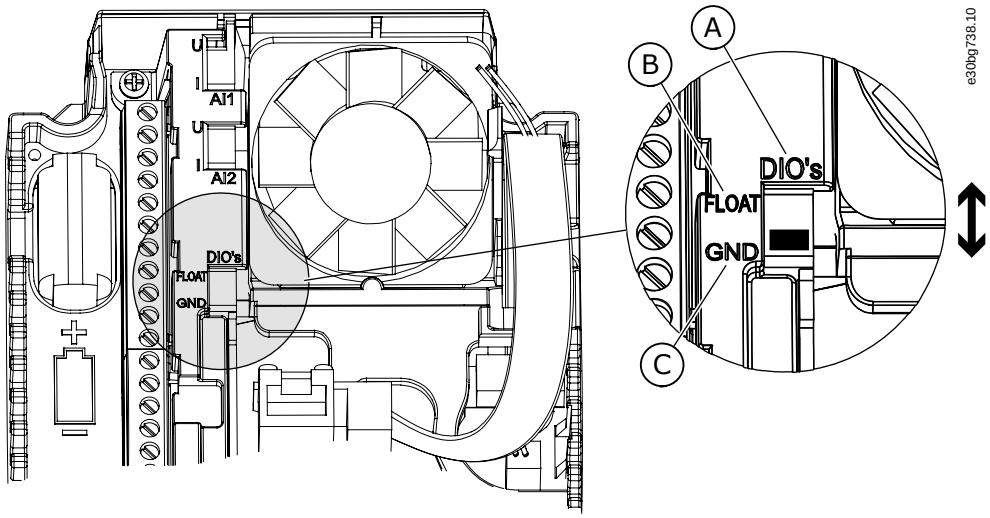

Illustration 43: Change the Position of This Switch to Isolate the Digital Inputs from Ground

A	The digital inputs	C	Connected to ground (default)
B	Floating		

7.6 Fieldbus Connection

7.6.1 Fieldbus Terminals

The drive can be connected to fieldbus with an RS485 or an Ethernet cable.

- If an RS485 cable is used, connect it to terminals A and B of the default I/O board.
- If an Ethernet cable is used, connect it to the Ethernet terminal.

In a VACON® 3000 AFE drive, connect the fieldbus to both the AFE and INU control units.

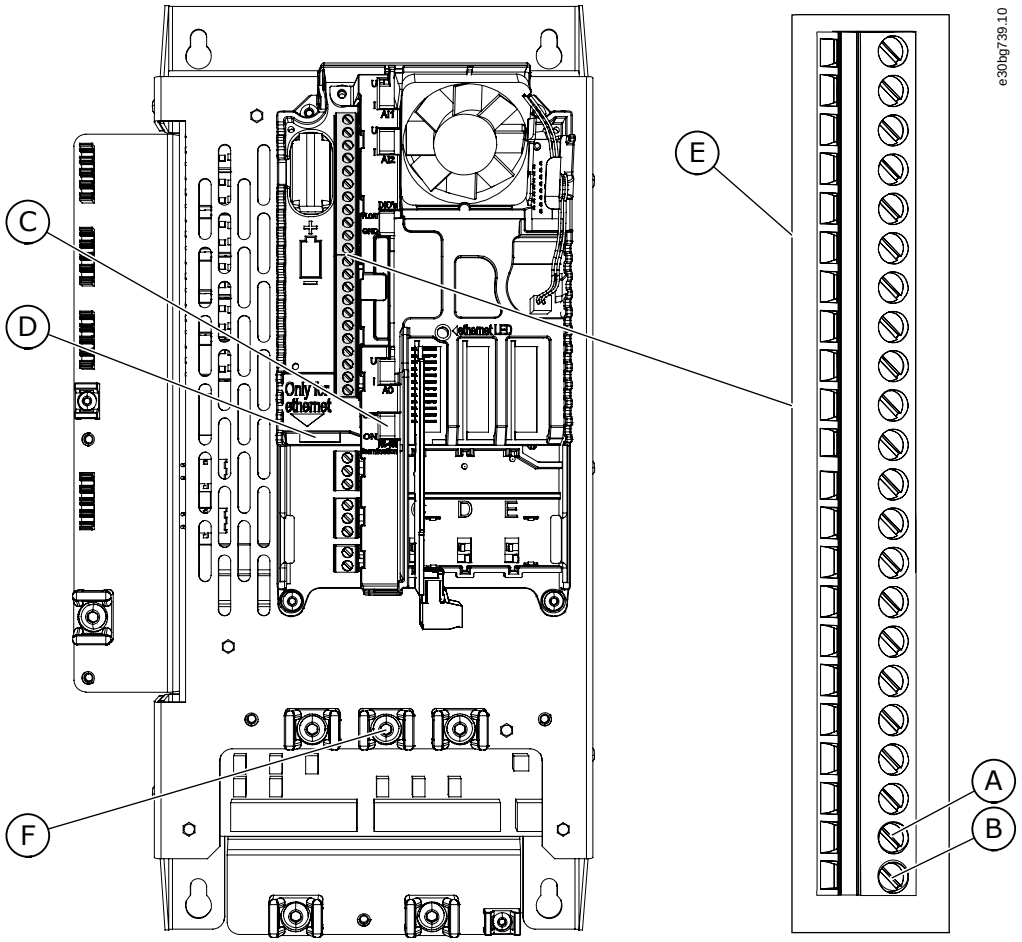

Illustration 44: The Ethernet and RS485 Connections

A	RS485 terminal A = Data -	D	The Ethernet terminal
B	RS485 terminal B = Data +	E	The control terminals
C	RS485 DIP switch	F	Cable clamps

7.6.2 Using Fieldbus through an Ethernet Cable

Table 12: Ethernet Cable Data

Item	Description
Plug type	Shielded RJ45 plug, maximum length 40 mm (1.57 in)
Cable type	CAT5e STP
Cable length	Maximum 100 m (328 ft)

Ethernet Cabling

1. Connect the Ethernet cable to its terminal.

   See more in the installation guide of the used fieldbus.

7.6.3 Using Fieldbus through an RS485 Cable

Table 13: RS485 Cable Data

Item	Description
Plug type	2.5 mm^2 (AWG13)
Cable type	STP (shielded twisted pair), Belden 9841 or similar
Cable length	So that it agrees with the fieldbus. See the fieldbus manual.

RS485 Cabling

1. Remove approximately 15 mm (0.59 in) of the gray shield of the RS485 cable. Do this for the two fieldbus cables.
   a. Strip the cables for approximately 5 mm (0.20 in) to put them in the terminals. Do not keep more than 10 mm (0.39 in) of the cable outside the terminals.

   b. Strip the cable at such a distance from the terminal that it can be attached to the frame with the grounding clamp for the control cable. Strip the cable at a maximum length of 15 mm (0.59 in). Do not remove the aluminum shield of the cable.

2. Connect the cable to the default I/O board of the drive, in terminals A and B.

- A = negative
- B = positive

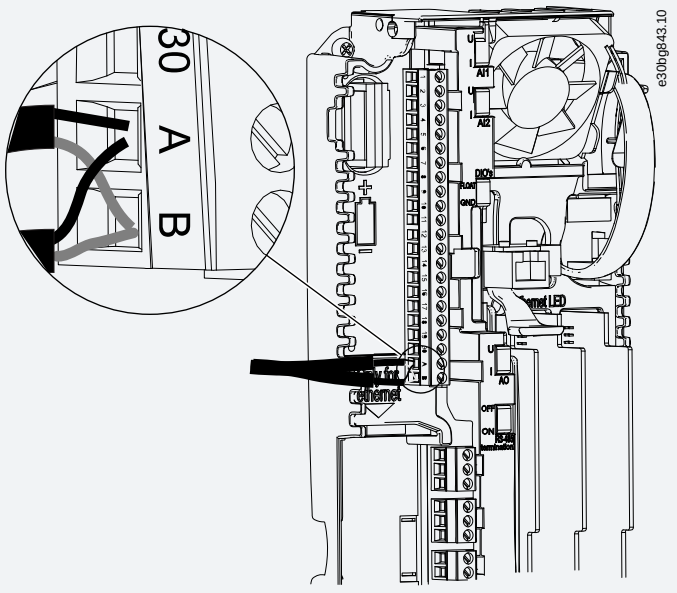

3. Attach the shield of the cable to the frame of the drive with a grounding clamp for the control cable to make a grounding connection.

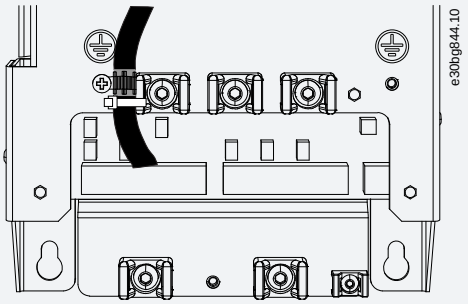

Illustration 45: Grounding the Cable with a Grounding Clamp

4. If the drive is the last device on the fieldbus line, set the bus termination. Set the bus termination for the first and the last device of the fieldbus line. It is recommended that the first device on the fieldbus is the master device.
   a. Find the DIP switches on the left side of the control unit of the drive.

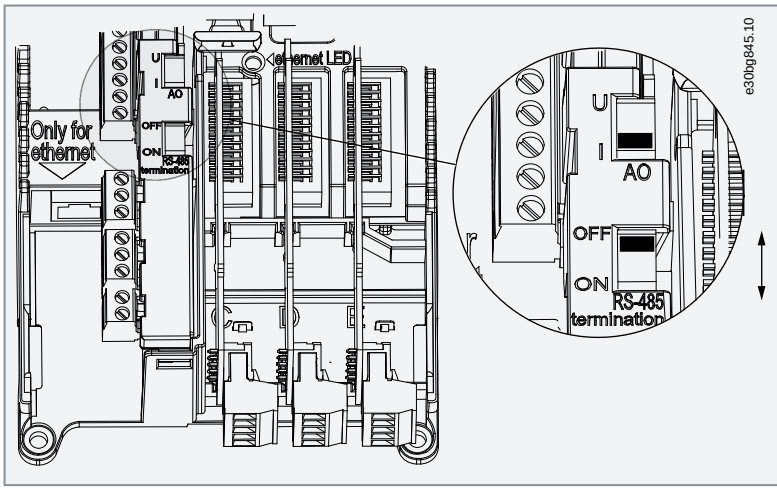

   b. Set the DIP switch of the RS485 bus termination to the ON position.

The termination resistors are placed at both ends of the fieldbus line to decrease signal reflections on the line.
Biasing is built in the bus termination resistor. The termination resistance is 220 Ω.

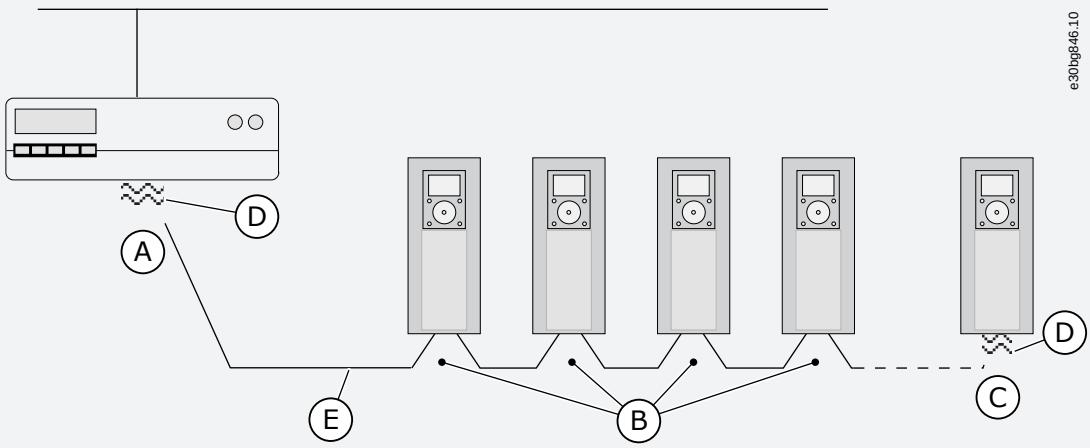

Illustration 46: Setting the Bus Termination for a Fieldbus Line

A	The termination is activated	D	The bus termination. The resistance is 220 Ω.
B	The termination is deactivated	E	The fieldbus
C	The termination is activated with a DIP switch		

NOTICE

LOSS OF TERMINATION RESISTANCE

If the last device on the fieldbus line is powered down, the termination resistance is lost. The loss of termination resistance causes signal reflections on the line, which can disrupt the fieldbus communication.

- Do not power down the last device on the fieldbus line while the fieldbus is active.

7.7 Option Board Installation

⚠ WARNING ⚠

SHOCK HAZARD FROM CONTROL TERMINALS

The control terminals can have a dangerous voltage also when the drive is disconnected from mains. A contact with this voltage can lead to injury.

- Make sure that there is no voltage in the control terminals before touching the control terminals.

NOTICE

INCOMPATIBLE OPTION BOARDS

It is not possible to install option boards that are not compatible with the drive.

If the installed board is an OPTB or an OPTC option board, make sure that the label on it says "dv" (dual voltage). This marking shows that the option board is compatible with the drive.

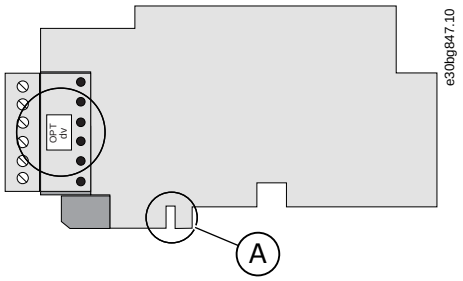

Illustration 47: Label on the Option Board

A	The slot coding

Installation Procedure

1. To get access to the option slots, open the cover of the control unit.

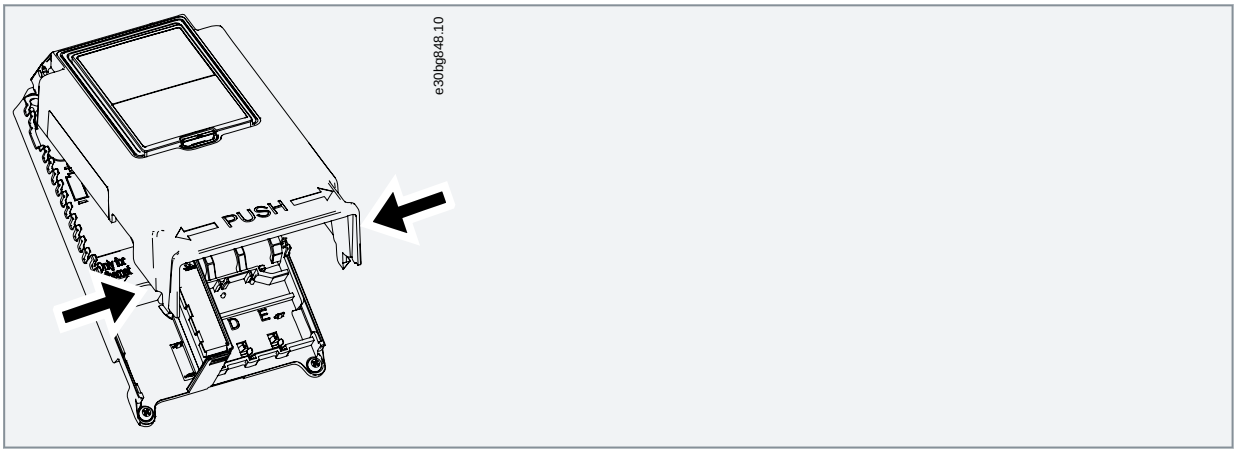

2. Install the option board into the correct slot: C, D, or E.

The option board has a slot coding, because of which it is not possible to install the option board in an incorrect slot.

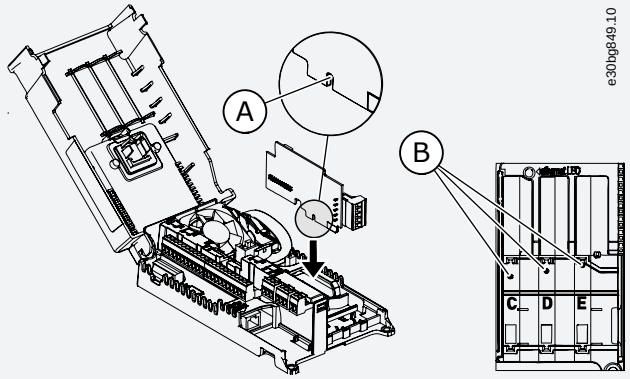

Illustration 48: Installing the Option Boards

A	The slot coding
B	The option slots

3. Close the cover of the control unit.

7.8 Optical Fiber Connections

The VACON® 3000 drive has a high-speed Powerbus optical fiber interface for internal connections. The control unit has six optical fiber connections: four for phase modules, one for the connection between the control units and one for an auxiliary board. The two terminals used for the control of the INU or AFE phase modules are shown in Illustration 49.

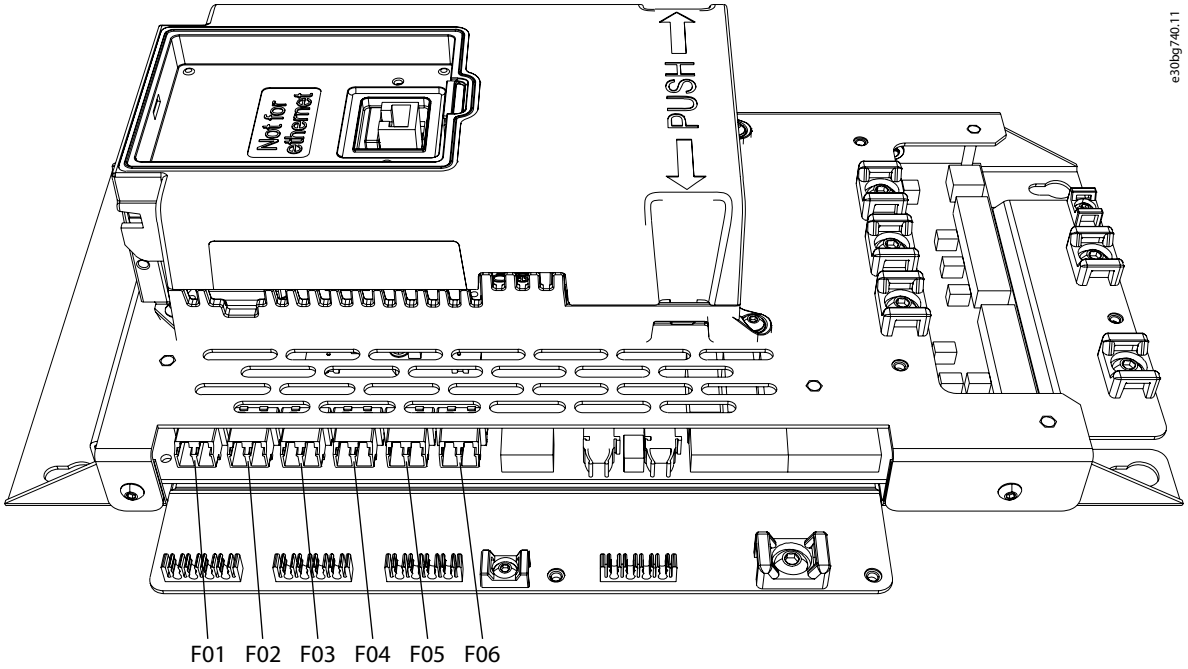

Illustration 49: Optical Fiber Terminals

F01	Terminal for phase module connections (belt 1)	F04	Terminal not used
F02	Terminal for phase module connections (belt 2)	F05	Terminal for auxiliary I/O board connection
F03	Terminal not used	F06	Terminal not used

Connect the phase modules of each AFE or INU in series (see Illustration 50).

- Connect the optical fiber from connector A of the phase module L1/U to connector F01 on the control unit.
- Connect the optical fiber from connector A of the phase module L2/V to connector B on phase module L1/U.
- Connect the optical fiber from connector A of the phase module L3/W to connector B on phase module L2/V.

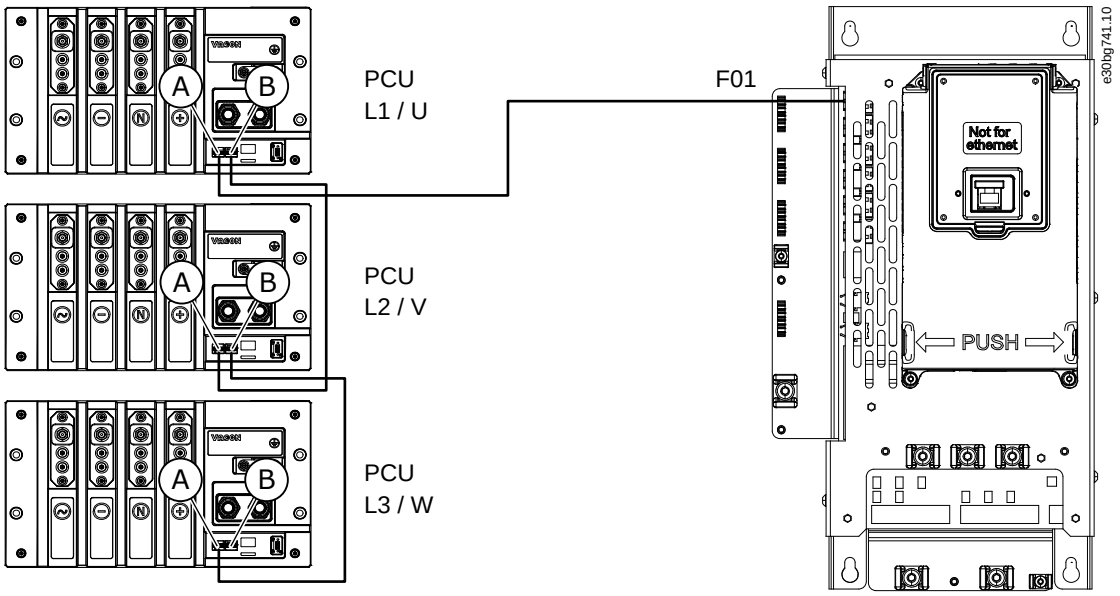

Illustration 50: Optical Fiber Connections between Control Unit and Phase Modules

Two parallel AFE or INU units can be connected to one control unit. The first AFE or INU unit (Belt 1, series connection of three phase modules) is connected to control unit connector F01 and the second (B2) to connector F02.

If a brake chopper is installed (option +DBCU), there is a separate control unit for the brake choppers. Connect the brake chopper modules in series as shown in Illustration 51. A maximum of three modules can be connected in series. Brake choppers can also be connected to the control unit one by one (BCU1 to connector FO1, and BCU2 to FO2).

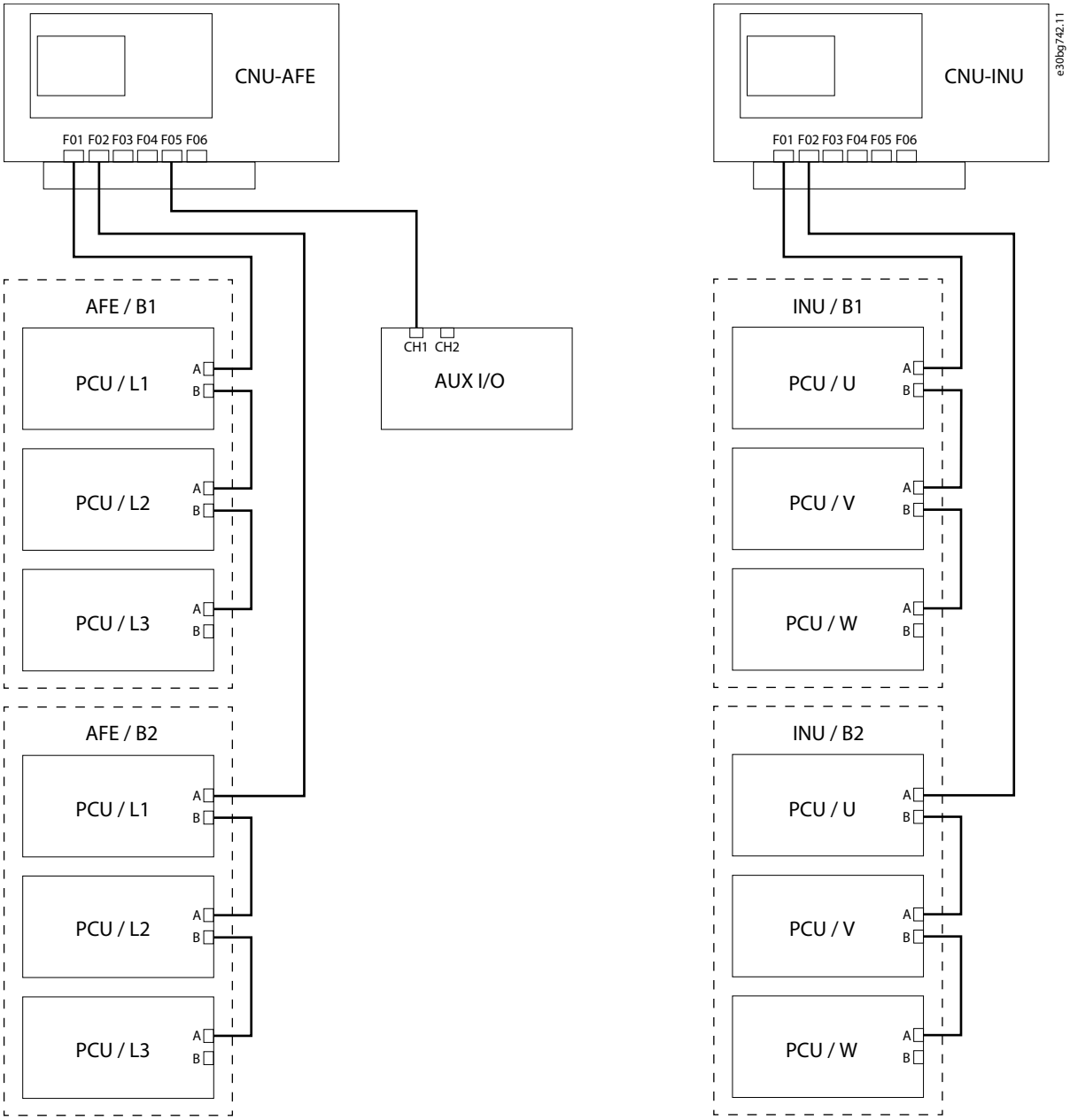

Illustration 51: Parallel Optical Fiber Connections in an AFE Drive

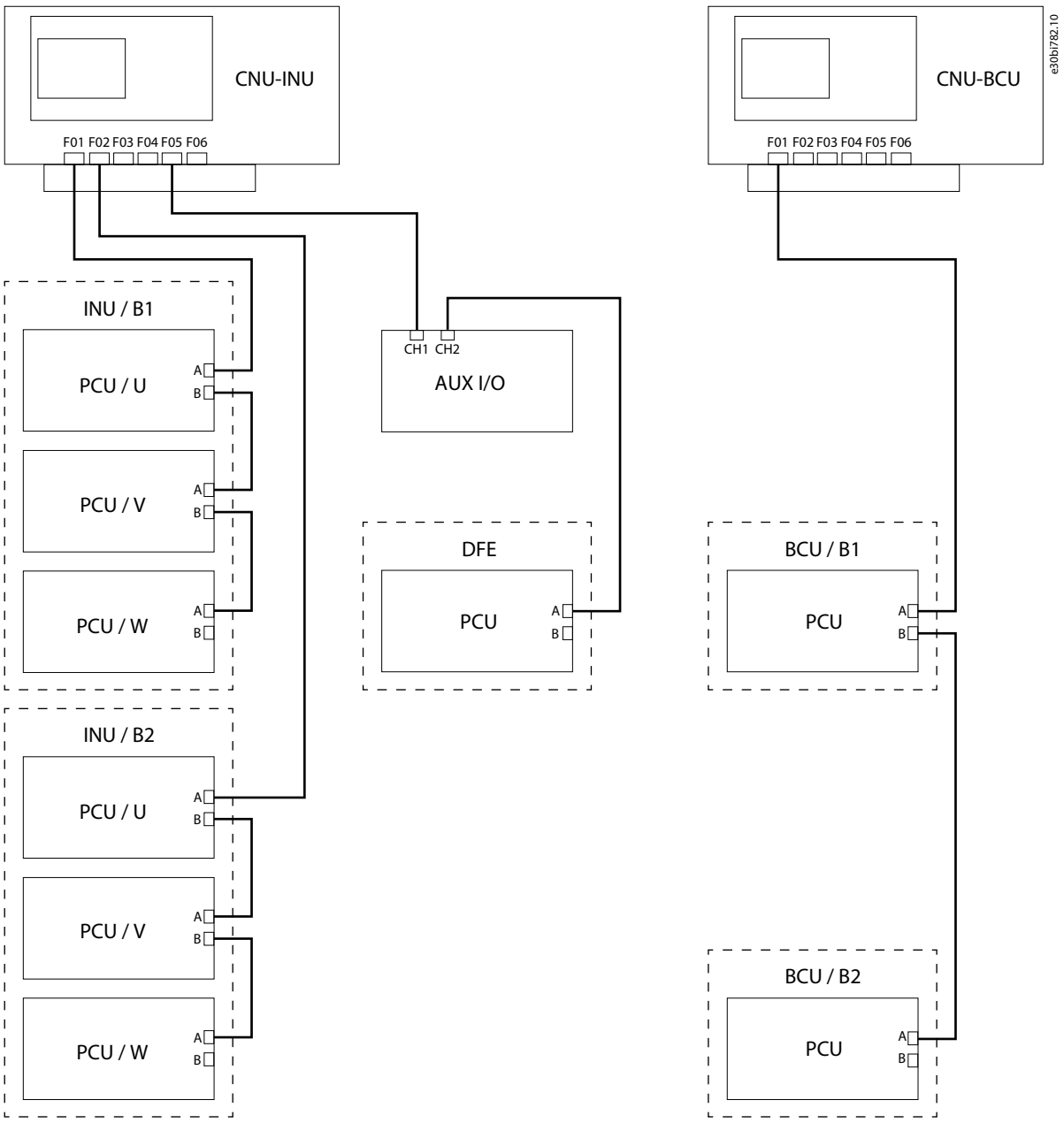

Illustration 52: Parallel Optical Fiber Connections in a 12-pulse Drive with BCU Option

7.8.1 Selection of Optical Fiber Cables

SI-POF duplex cables are recommended for all optical fiber connections. The connector type must be LC duplex. The specifications in Table 14 are for cables manufactured by Firecomms. The cable assemblies (POF and connectors) are available from Firecomms resellers with type code FD-XXX-LDB, where XXX is the length of the cable, XXC in centimeters, and XXM in meters.

Table 14: Optical Fiber Cable Specifications

Item	Specification
Operation temperature	-40...+85°C (-40...+185°F)
Minimum bend radius	25 mm (1 in)
Cable size (outer dimensions)	2.2 x 4.4 mm (0.087 x 0.173 in)
Fiber size	d = 1 mm (0.04 in)
Cover material	Flame resistant PE or PVC

Item	Specification
UL flame resistance	VW-1
Cable standard	Compatible with IEC 60793-2-40 class A4a
Plastic optical fiber type	Duplex optical fiber, 1 mm (0.04 in) high-purity core. The core and cladding are surrounded by a 2.2 mm (0.082 in) polyethylene (PE) jacket. Firecomms type code: FC-500-0DB
Connector type	Firecomms type code: FP-00C-LD0
Connector standard	Compatible with IEC 61754-20 edition 2

Recommended tools (from FiberFin):

- LC Duplex crimp tool, 2.60 mm hex, PEW 8 (FiberFin type code: FF-CRMP-LC-WL)
- Ultra Low Loss finishing tool, LC Connector (FiberFin type code: FF-LC-RZR1)
- Installer kit, including finishing tool and crimping tool (FiberFin type code: FF-STDLCINST-K)

7.8.2 Making Optical Fiber Cables

The fiber optic cables most likely to need replacement are the ones connected to the phase modules. During the installation or replacement of modules, it is possible to damage the fiber optic cables accidentally. This procedure describes how to make new cables.

These tools and equipment are required:

- Specialized tool kit for fiber optics
  - Wire stripper
  - Wire cutter
  - Crimper tool
- Fiber optic wire
- Connectors

For details, see 7.8.1 Selection of Optical Fiber Cables.

Procedure

1. Cut the required length of fiber optic wire. Use a wire cutter to make sure that the cuts are clean.
2. Use the stripper tool to strip the wires approximately 25 mm (1 in) at both ends.

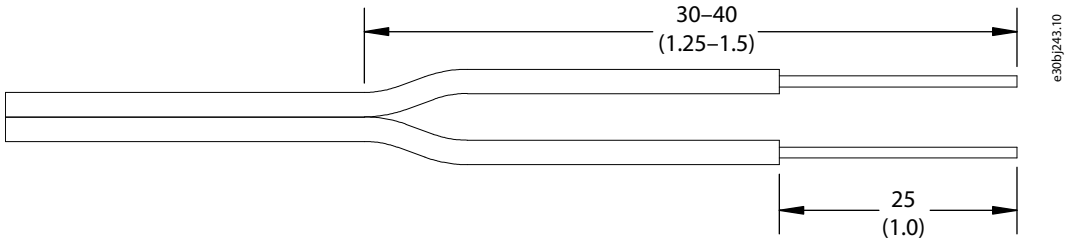

Illustration 53: Stripping and Splitting the Cable

3. Split the wires apart 30–40 mm (1.25–1.5 in) from both ends.

   See Illustration 53.

4. Place a connector into the crimper tool.

5. Push the fibers into the connector. Make sure that the fibers are fully pushed in. The fibers must come out of the end of the connector approximately 1.6 mm (0.63 in).

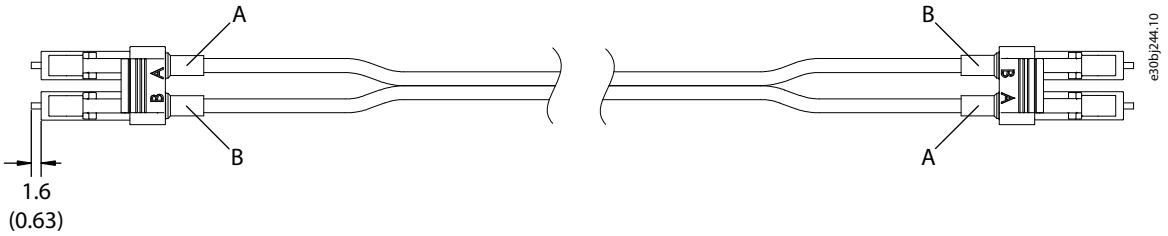

Illustration 54: Installing the Connectors on the Cable

6. When the wires and connector are fully in position, firmly close the crimper grip.
7. Install the connector on the other end of the cable. Notice the labels A and B on the connectors. When making the connection for the other end of the wire, B goes to the A slot and A to B.

See Illustration 54.

8. Check the cable by shining an LED on one end of the cable and verifying that the other end is lit. For example, shine on wire A on one end, and verify that B is lit on the other end.

7.9 Encoder Interface

The VACON® 3000 control unit includes a 2-encoder interface. The encoder interface is only used in the INU control unit, not in AFE or BCU control units.

The encoder interface is designed for HTL (High-voltage Transistor Logic) type encoders (voltage output type Push-pull HTL, open collector output type HTL) which provide input signal levels dependent on the supply voltage of the encoder.

The encoder properties include:

- Cross-connected optically isolated feedback for good noise limits
- 150 kHz maximum frequency
- Different encoder line driver voltage levels (24 V, 15 V, 5 V)
- Different encoder supply voltage levels (+24 V, +15 V) with current limits
- Differential encoder duplicator option from one of the encoder interfaces
- Master/follower selection
- Two qualifier inputs (1Q, 2Q) for position detection or pulse tachometer applications

If absolute encoder functionality is required, contact Danfoss.

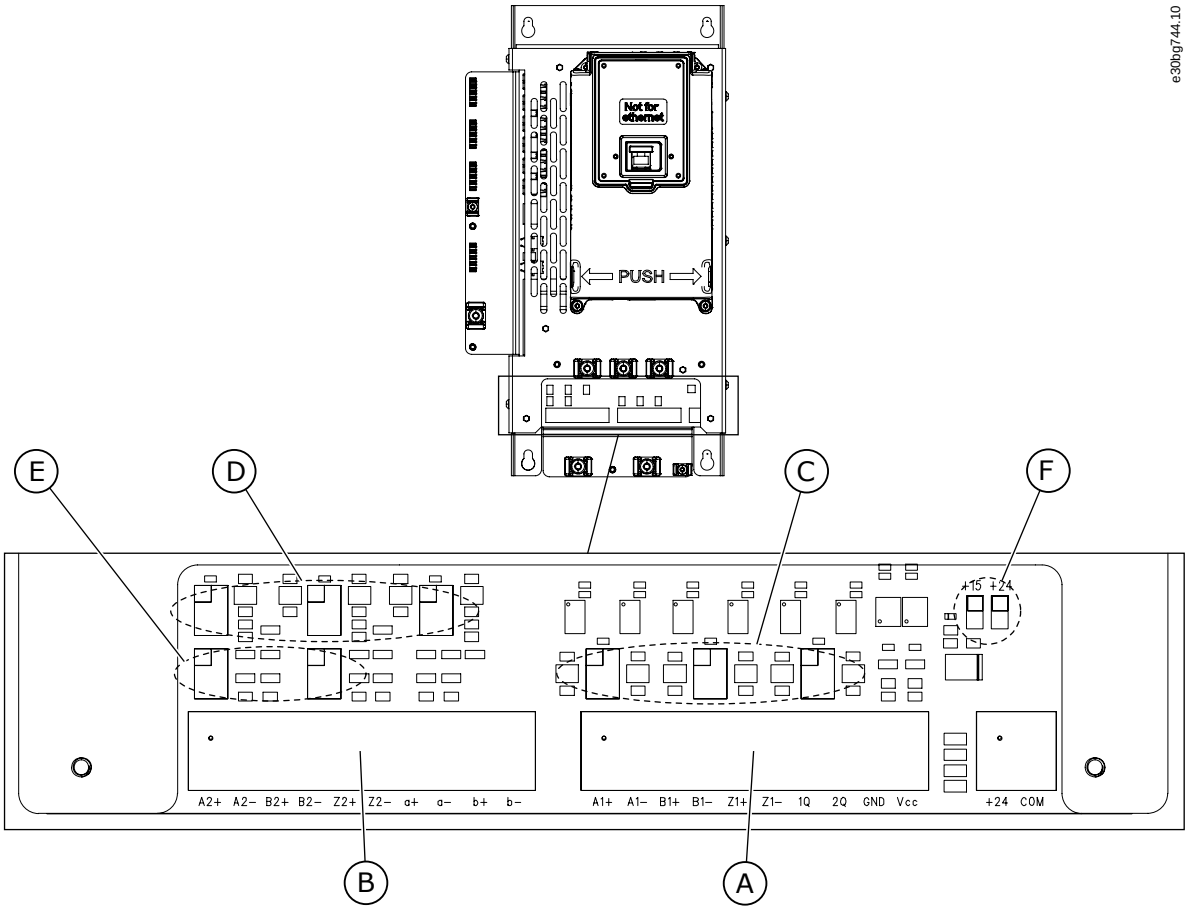

Illustration 55: Encoder Interface of the Control Unit

A	Encoder terminal, channel A	D	Encoder output voltage selection jumpers, channel B
B	Encoder terminal, channel B	E	Master/follower selection jumpers
C	Encoder output voltage selection jumpers, channel A	F	Encoder input voltage selection jumpers

7.9.1 Encoder Terminals and Signals

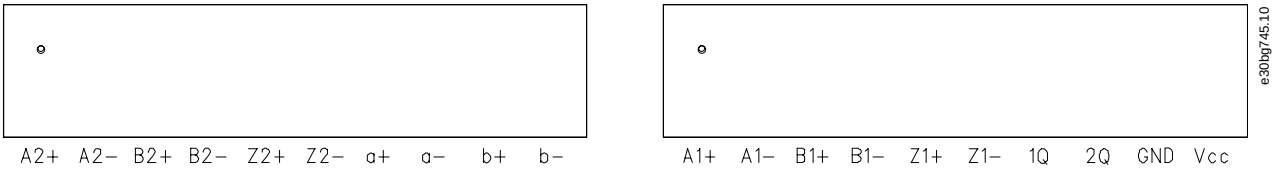

Illustration 56: Encoder Terminals

Encoder channel A is usable only for motor control.

Table 15: Channel A Terminals and Signals

Terminal	Signal	Signal Description
1	A1+	Channel A pulse input A1+ (differential); voltage range +5 V…+24 V
2	A1-	Channel A pulse input A1- (differential); voltage range +5 V…+24 V
3	B1+	Channel A pulse input B1+ (differential); voltage range +5 V…+24 V; 90° delay from A1+

Terminal	Signal	Signal Description
4	B1-	Channel A pulse input B1- (differential); voltage range +5 V…+24 V; 90° delay from A1-
5	Z1+	Channel A pulse input Z1+ (differential); voltage range +5 V…+24 V; One pulse/revolution
6	Z1-	Channel A pulse input Z1- (differential); voltage range +5 V…+24 V; One pulse/revolution
7	1Q	Qualifier/position input; Single-ended signal (to ground)
8	2Q	Qualifier/position input; Single-ended signal (to ground)
9	GND	Ground for control and inputs 1Q and 2Q
10	Vcc	Encoder supply voltage (selection with jumpers X11 and X15)

Table 16: Channel B Terminals and Signals

Terminal	Signal	Signal Description
1	A2+	Channel B pulse input A2+ (differential); voltage range +5 V…+24 V
2	A2-	Channel B pulse input A2- (differential); voltage range +5 V…+24 V
3	B2+	Channel B pulse input B2+ (differential); voltage range +5 V…+24 V; 90° delay from A2+
4	B2-	Channel B pulse input B2- (differential); voltage range +5 V…+24 V; 90° delay from A2-
5	Z2+	Channel B pulse input Z2+ (differential); voltage range +5 V…+24 V; One pulse/revolution
6	Z2-	Channel B pulse input Z2- (differential); voltage range +5 V…+24 V; One pulse/revolution
7	a+	Pulse output a+ (differential); Made internally from channel 1 or channel 2 (selection with jumper X21); Output voltage +24 V
8	a-	Pulse output a- (differential); Made internally from channel 1 or channel 2 (selection with jumper X21); Output voltage +24 V
9	b+	Pulse output b+ (differential); Made internally from channel 1 or channel 2 (selection with jumper X22); Output voltage +24 V
10	b-	Pulse output b- (differential); Made internally from channel 1 or channel 2 (selection with jumper X22); Output voltage +24 V

7.9.2 Encoder Jumper Configurations

See the locations of the jumpers in Illustration 57 and the jumper pin sequence in Illustration 58.

The available encoder jumper configurations:

- Encoder input voltage selection, jumpers X11 and X15, see Table 17.
- Master/follower selection, jumpers X21 and X22, see Table 18.
- Encoder output voltage selection for channel A, jumpers X23-X25, see Table 19.
- Encoder output voltage selection for channel B, jumpers X26-X28, see Table 20.

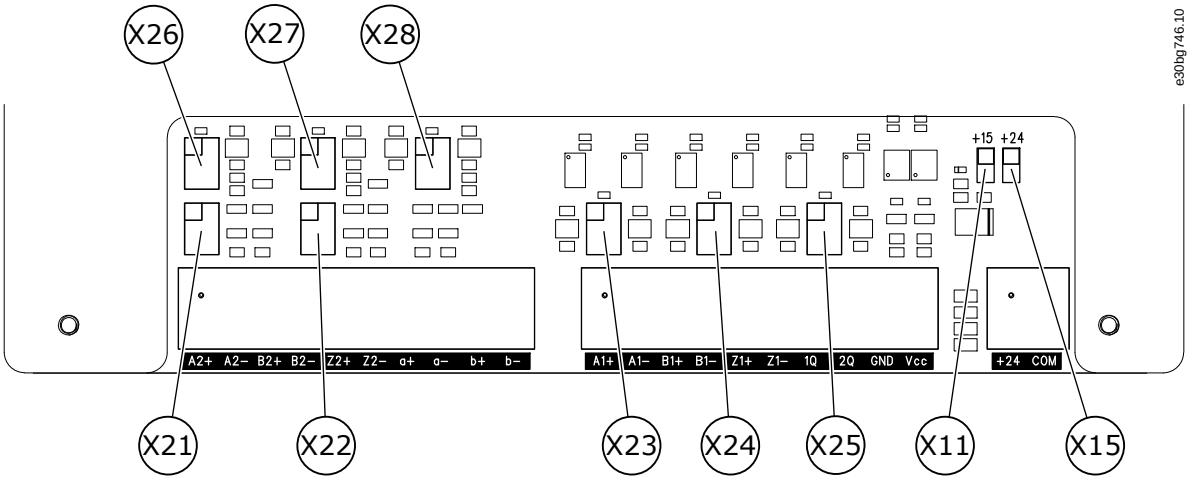

Illustration 57: Encoder Jumper Locations

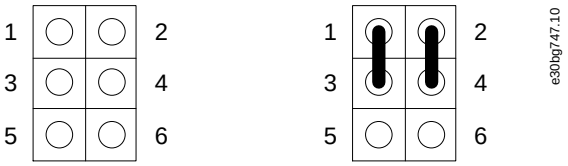

Illustration 58: Jumper Pin Sequence and Connection Example (Pins 1-3 and 2-4 Connected)

Table 17: Encoder Input Voltage Selection, Jumpers X11 and X15

Jumper Selection	Pins to connect, Jumper X11	Pins to connect, Jumper X15
+15 V (default)	1-2	open
+24 V	open	1-2

Table 18: Master/Follower Selection, Jumpers X21 and X22

Jumper Selection	Pins to connect
Master (default)	3-5 and 4-6
Follower	1-3 and 2-4

Table 19: Encoder Output Voltage Selection, Channel A

Jumper Selection	Pins to connect, Jumper X23 (input A1)	Pins to connect, Jumper X24 (input B1)	Pins to connect, Jumper X25 (input Z1)
+24 V	open	open	open
+15 V (default)	1-3 and 2-4	1-3 and 2-4	1-3 and 2-4
+5 V	3-5 and 4-6	3-5 and 4-6	3-5 and 4-6

Table 20: Encoder Output Voltage Selection, Channel B

Jumper Selection	Pins to connect, Jumper X26 (input A2)	Pins to connect, Jumper X27 (input B2)	Pins to connect, Jumper X28 (input Z2)
+24 V	open	open	open
+15 V (default)	1-3 and 2-4	1-3 and 2-4	1-3 and 2-4
+5 V	3-5 and 4-6	3-5 and 4-6	3-5 and 4-6

7.9.3 Encoder Connection

Ground the encoder cable shields only at the AC drive end to avoid circulating current in the shield. Isolate the shield at the encoder end.

If possible, use double shielded cable for encoder connection.

A high pulse frequency combined with a high cable capacitance places a considerable load on the encoder. Therefore, apply as low a voltage as possible for the encoder supply. Use +15 V encoder voltage input, if allowed in the voltage range specification of the encoder.

If external voltage supply is used, connect the ground of the external supply to terminal 9 in channel A of the encoder interface and to the encoder ground.

Differential Connection

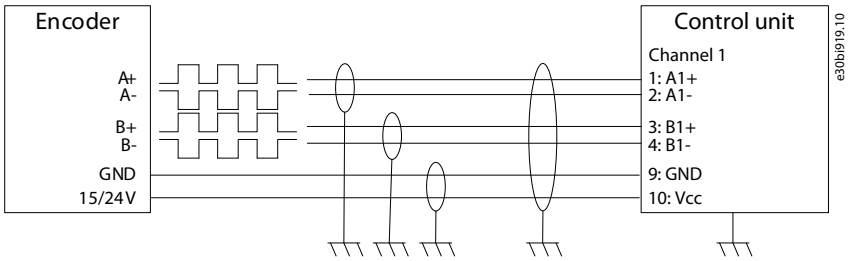

Illustration 59: HTL Type Encoder Connection with Differential Inputs

Single-ended Connection

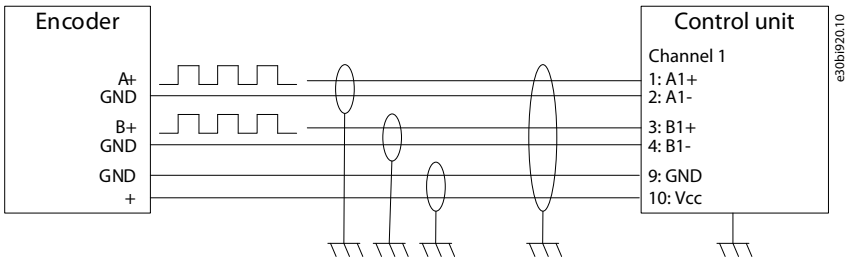

Illustration 60: HTL Type Encoder Connection (Open Source) with Single-ended Inputs

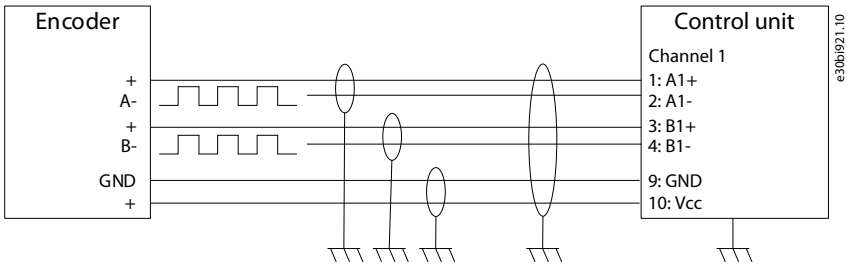

Illustration 61: HTL Type Encoder Connection (Open Collector) with Single-ended Inputs

Chain Connection

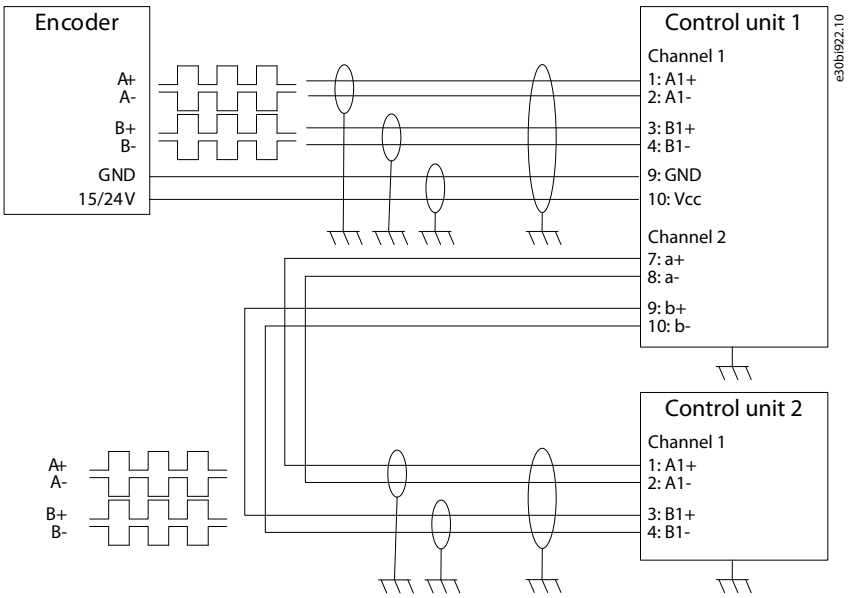

Illustration 62: Chain Connection with Duplicated Differential Inputs

7.10 Battery for the Real-Time Clock (RTC)

To use the real-time clock (RTC), a battery must be installed in the left side of the control unit. See 7.2 The Control Compartment of the Enclosed Drive. Use a ½ AA battery with 3.6 V and a capacity of 1000–1200 mAh. Use, for example, a Vitzrocell SB-AA02 battery.

The battery lasts approximately 10 years. See more about the functions of the RTC in the application guides.

7.11 Galvanic Isolation Barriers

The control connections are isolated from the mains. The ground terminals are permanently connected to the I/O ground.

The digital inputs on the standard I/O board can be galvanically isolated from the I/O ground. To isolate the digital inputs, use the DIP switch that has the positions FLOAT and GND. See 7.5.2 Isolation of the Digital Inputs from Ground.

7.12 System and Application Software

The VACON® 3000 control unit comes with AFE or INU system and application software. There is also separate application software for the brake chopper control unit.

The application software is specific to the VACON® 3000 and comes installed on the drive. For more information, see the VACON® 3000 Application guides.

7.13 Technical Data on Control Connections

Table 21: The Standard I/O Board

Terminal	Signal	Technical Information
1	Reference output	+10 V, 0%...+3%, maximum current: 10 mA
2	Analog input, voltage, or current	Analog input channel 1 0...+10 V (Ri = 200 kΩ) 4–20 mA (Ri =250 Ω) Resolution 0.1%, accuracy ±1% Selection V/mA with DIP switches (see chapter Selection of terminal functions with DIP switches in the Operating Guide).
3	Analog input common (current)	Differential input if not connected to ground Allows ±20 V common-mode voltage to GND

Terminal	Signal	Technical Information
4	Analog input, voltage, or current	Analog input channel 2 Default: 4–20 mA (Ri =250 Ω) 0...+10 V (Ri = 200 kΩ) Resolution 0.1%, accuracy ±1% Selection V/mA with DIP switches (see chapter Selection of terminal functions with DIP switches in the Operating Guide).
5	Analog input common (current)	Differential input if not connected to ground Allows ±20 V common-mode voltage to GND
6	24 V auxiliary voltage	+24 V, ±10%, maximum voltage ripple < 100 mV rms Maximum 250 mA Short-circuit protected
7	I/O ground	Ground for reference and controls (connected internally to frame ground through 1 MΩ)
8	Digital input 1	Positive or negative logic Ri = min. 5 kΩ 0–5 V = 0 15–30 V = 1
9	Digital input 2	
10	Digital input 3	
11	Common A for DIN1-DIN6	Digital inputs can be disconnected from ground. See chapter Isolation of digital inputs from ground in the Operating Guide.
12	24 V auxiliary voltage	+24 V, ±10%, maximum voltage ripple < 100 mV rms Maximum 250 mA Short-circuit protected
13	I/O ground	Ground for reference and controls (connected internally to frame ground through 1 MΩ)
14	Digital input 4	Positive or negative logic Ri = min. 5 kΩ 0–5 V = 0 15–30 V = 1
15	Digital input 5	
16	Digital input 6	
17	Common A for DIN1-DIN6	Digital inputs can be disconnected from ground. See chapter Isolation of digital inputs from ground in the Operating Guide.
18	Analog signal (+output)	Analog output channel 1, selection 0 -20 mA, load <500 Ω Default: 0–20 mA 0–10 V Resolution 0.1%, accuracy ±2% Selection V/mA with DIP switches (see chapter Selection of terminal functions with DIP switches in the Operating Guide) Short-circuit protected
19	Analog output common	
30	24 V auxiliary input voltage	Can be used as external power back-up for the control unit
A	RS485	Differential receiver/transmitter Set bus termination with DIP switches (see chapter Selection of terminal functions with DIP switches in the Operating Guide). Termination resistance = 220 Ω
B	RS485	

Table 22: The Standard Relay Board (+SBF3)

Terminal	Signal	Technical information
21 22 23	Relay output 1[(1)]	Change-over switch (SPDT) relay. 5.5 mm isolation between channels. Switching capacity • 24 V DC / 8 A • 250 V AC / 8 A • 125 V DC / 0.4 A Minimum switching load • 5 V / 10 mA
24 25 26	Relay output 2[(1)]	Change-over switch (SPDT) relay. 5.5 mm isolation between channels. Switching capacity • 24 V DC / 8 A • 250 V AC / 8 A • 125 V DC / 0.4 A Minimum switching load • 5 V / 10 mA
32 33	Relay output 3[(1)]	Normally-open (NO or SPST) switch relay. 5.5 mm isolation between channels. Switching capacity • 24 V DC / 8 A • 250 V AC / 8 A • 125 V DC / 0.4 A Minimum switching load • 5 V / 10 mA

[1] If 230 V AC is used as control voltage from the output relays, the control circuitry must be powered with a separate isolation transformer to limit the short-circuit current and the overvoltage spikes. This is to prevent welding on the relay switches. Refer to standard EN 60204-1, section 7.2.9.

7.14 Auxiliary I/O Board

7.14.1 Connector Locations

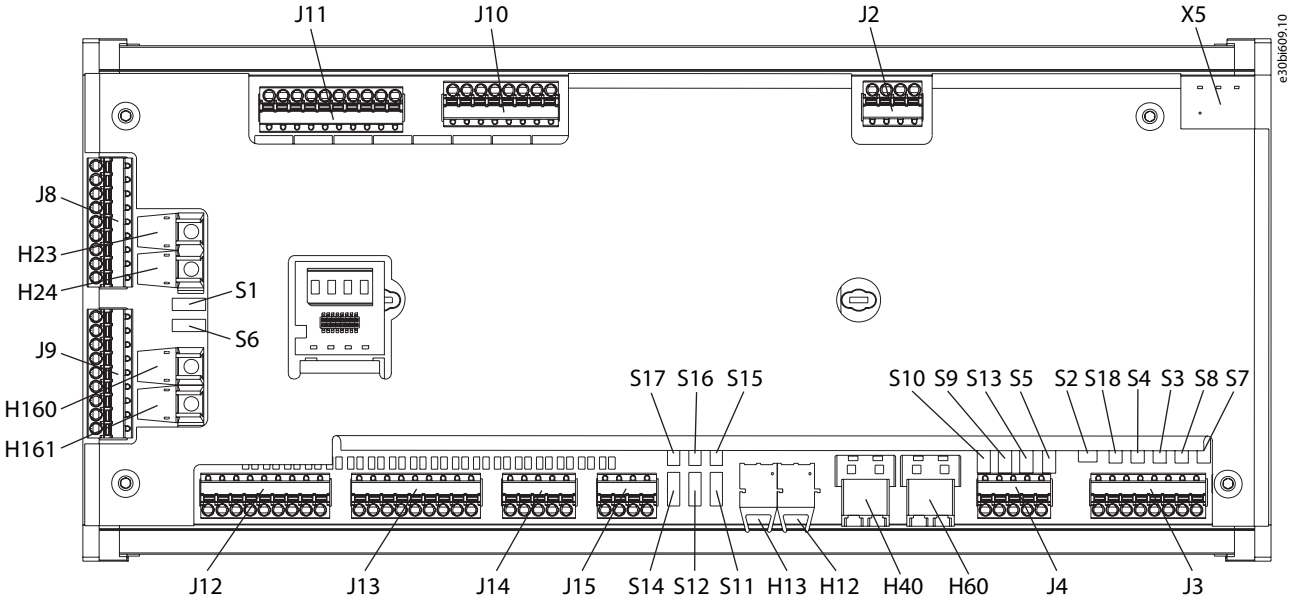

Illustration 63: The Connectors and Switches on the Auxiliary I/O Board

H12	Breaker enable fiber optic input 2
H13	Breaker enable fiber optic input 1
H23	External breaker enable fiber optic TX2
H24	External breaker enable fiber optic RX2
H40	Communication channel 1 (PBHS)
H60	Communication channel 2 (PBHS)
H160	External breaker enable fiber optic TX1
H161	External breaker enable fiber optic RX1
J2	Grid voltage measurement, 3 channels
J3	Grid current measurement, 3 channels
J4	Analog voltage (0–10 V)/analog current (4–20 mA) measurement, 4 channels
J8	Digital inputs (24 V, 0.5 A), 8 channels
J9	Digital inputs (24 V, 0.5 A), 8 channels
J10	Relay outputs, 4 channels
J11	Relay outputs, 5 channels
J12	Digital inputs (24 V, 0.5 A), 8 channels
J13	Digital inputs (24 V, 0.5 A), 8 channels
J14	Breaker enable digital inputs, 4 channels
J15	24 V pull-up for sensors
S1–S18	Control switches
X5	24 V input

7.14.2 Connector Specifications

Table 23: Connectors H12/H13, Breaker Enable Optical Fiber Signals

Connector	Signal Name	Input Disable Switch	Description
H12	Breaker enable 2	S12	When light is present, the breaker is enabled. Switch in position (1-2) disables the input.
H13	Breaker enable 1	S11	When light is present, the breaker is enabled. Switch in position (1-2) disables the input.

Table 24: Connectors H23/H24 and H160/H161, External Breaker Enable Optical Fiber Inputs/Outputs

Connector	Signal Name	Input Disable Switch	Description
H23	Ext Brk TX 2	–	Transmit breaker enable signal to other boards.
H24	Ext Brk RX 2	S1	Receive breaker enable signal from other boards. Switch position (1-2) disables external signal.
H160	Ext Brk TX 1	–	Transmit breaker enable signal to other boards.
H161	Ext Brk RX 1	S6	Receive breaker enable signal from other boards. Switch position (1-2) disables external signal.

Table 25: Connector J2, Grid Voltage (120/127 V) Measurement (Copper Wire) Analog Signals

Connector	Signal Name	Description
J2-1	Phase A	120/127 V phase A grid voltage input (LN peak -170 V)
J2-2	Phase B	120/127 V phase B grid voltage input (LN peak -170 V)
J2-3	Phase C	120/127 V phase C grid voltage input (LN peak -170 V)
J2-4	Reference	Neutral/return/artificial neutral

Table 26: Connector J3, Grid Current Measurement (Copper Wire) Analog Signals

Connector	Signal Name	Switch Control	Description
J3-1	CT Supply	–	+16 V, positive supply output for hall effect sensor
J3-2	CT Supply	–	-16 V, negative supply output for hall effect sensor
J3-3	Analog Input 5 +	S2	S2 switch position (1-2) grounds Input 1P
J3-4	Analog Input 5 -	S18	S18 switch position (1-2) connects burden resistor
J3-5	Analog Input 6 +	S4	S4 switch position (1-2) grounds Input 2P
J3-6	Analog Input 6 -	S3	S3 switch position (1-2) connects burden resistor
J3-7	Analog Input 7 +	S8	S8 switch position (1-2) grounds Input 3P
J3-8	Analog Input 7 -	S7	S7 switch position (1-2) connects burden resistor

Table 27: Connector J4, General Purpose Voltage/Current Measurement (Copper Wire) Analog Signals

Connector	Signal Name	Switch Control	Description
J4-1	Analog Input 1	S10	Voltage/current input 1 (single ended). Switch toggles between current and voltage.
J4-2	Analog Input 2	S9	Voltage/current input 2 (single ended). Switch toggles between current and voltage.
J4-3	Analog Input 3	S13	Voltage/current input 3 (single ended). Switch toggles between current and voltage.
J4-4	Analog Input 4	S5	Voltage/current input 4 (single ended). Switch toggles between current and voltage.
J4-5	Common	–	Return for analog voltage signals.

Table 28: Connector J8, 24 V/0.5 A Digital Input (Copper Wire) Signals

Connector	Signal Name	Description
J8-1	Digital input 1	24 V, 0.5 A optically isolated digital input (signal bank A)
J8-2	Digital input 2	24 V, 0.5 A optically isolated digital input (signal bank A)
J8-3	Digital input 3	24 V, 0.5 A optically isolated digital input (signal bank A)
J8-4	Digital input 4	24 V, 0.5 A optically isolated digital input (signal bank A)
J8-5	Digital input 5	24 V, 0.5 A optically isolated digital input (signal bank A)
J8-6	Digital input 6	24 V, 0.5 A optically isolated digital input (signal bank A)
J8-7	Digital input 7	24 V, 0.5 A optically isolated digital input (signal bank A)
J8-8	Digital input 8	24 V, 0.5 A optically isolated digital input (signal bank A)
J8-9	Common A	Signal return for bank A

Table 29: Connector J9, 24 V/0.5 A Digital Input (Copper Wire) Signals

Connector	Signal Name	Description
J9-1	Digital input 9	24 V, 0.5 A optically isolated digital input (signal bank B)
J9-2	Digital input 10	24 V, 0.5 A optically isolated digital input (signal bank B)
J9-3	Digital input 11	24 V, 0.5 A optically isolated digital input (signal bank B)
J9-4	Digital input 12	24 V, 0.5 A optically isolated digital input (signal bank B)
J9-5	Digital input 13	24 V, 0.5 A optically isolated digital input (signal bank B)
J9-6	Digital input 14	24 V, 0.5 A optically isolated digital input (signal bank B)
J9-7	Digital input 15	24 V, 0.5 A optically isolated digital input (signal bank B)
J9-8	Digital input 16	24 V, 0.5 A optically isolated digital input (signal bank B)
J9-9	Common B	Signal return for bank B

Table 30: Connector J10, Relay Outputs

Connector	Signal Name	Description
J10-1	Relay output 1 CM	Relay is disabled when breaker enable network is not satisfied.
J10-2	Relay output 1 NO	Relay is disabled when breaker enable network is not satisfied.
J10-3	Relay output 2 CM	Relay is disabled when breaker enable network is not satisfied.
J10-4	Relay output 2 NO	Relay is disabled when breaker enable network is not satisfied.
J10-5	Relay output 3 CM	Relay is disabled when breaker enable network is not satisfied.
J10-6	Relay output 3 NO	Relay is disabled when breaker enable network is not satisfied.
J10-7	Relay output 4 CM	Relay is disabled when breaker enable network is not satisfied.
J10-8	Relay output 4 NO	Relay is disabled when breaker enable network is not satisfied.

Table 31: Connector J11, Relay Outputs

Connector	Signal Name	Description
J11-1	Relay output 5 CM	Relay is disabled when breaker enable network is not satisfied.
J11-2	Relay output 5 NO	Relay is disabled when breaker enable network is not satisfied.
J11-3	Relay output 6 CM	Relay is disabled when breaker enable network is not satisfied.
J11-4	Relay output 6 NO	Relay is disabled when breaker enable network is not satisfied.
J11-5	Relay output 7 CM	Relay is disabled when breaker enable network is not satisfied.
J11-6	Relay output 7 NO	Relay is disabled when breaker enable network is not satisfied.
J11-7	Relay output 8 CM	Relay is disabled when breaker enable network is not satisfied.
J11-8	Relay output 8 NO	Relay is disabled when breaker enable network is not satisfied.
J11-9	Relay output 9 CM	Relay is disabled when breaker enable network is not satisfied.
J11-10	Relay output 9 NO	Relay is disabled when breaker enable network is not satisfied.

Table 32: Connector J12, 24 V/0.5 A Digital Input (Copper Wire) Signals

Connector	Signal Name	Description
J12-1	Digital input 17	24 V, 0.5 A optically isolated digital input (signal bank C)
J12-2	Digital input 18	24 V, 0.5 A optically isolated digital input (signal bank C)
J12-3	Digital input 19	24 V, 0.5 A optically isolated digital input (signal bank C)
J12-4	Digital input 20	24 V, 0.5 A optically isolated digital input (signal bank C)
J12-5	Digital input 21	24 V, 0.5 A optically isolated digital input (signal bank C)
J12-6	Digital input 22	24 V, 0.5 A optically isolated digital input (signal bank C)
J12-7	Digital input 23	24 V, 0.5 A optically isolated digital input (signal bank C)
J12-8	Digital input 24	24 V, 0.5 A optically isolated digital input (signal bank C)
J12-9	Common C	Signal return for bank C

Table 33: Connector J13, 24 V/0.5 A Digital Input (Copper Wire) Signals

Connector	Signal Name	Description
J13-1	Digital input 25	24 V, 0.5 A optically isolated digital input (signal bank D)
J13-2	Digital input 26	24 V, 0.5 A optically isolated digital input (signal bank D)
J13-3	Digital input 27	24 V, 0.5 A optically isolated digital input (signal bank D)
J13-4	Digital input 28	24 V, 0.5 A optically isolated digital input (signal bank D)
J13-5	Digital input 29	24 V, 0.5 A optically isolated digital input (signal bank D)
J13-6	Digital input 30	24 V, 0.5 A optically isolated digital input (signal bank D)

Connector	Signal Name	Description
J13-7	Digital input 31	24 V, 0.5 A optically isolated digital input (signal bank D)
J13-8	Digital input 32	24 V, 0.5 A optically isolated digital input (signal bank D)
J13-9	Common D	Signal return for bank D

Table 34: Connector J14, Breaker Enable, Copper Wire Signals (FK-MCP 1.5/5-ST-3.81)

Connector	Signal Name	Input Disable Switch	Description
J14-1	Breaker enable 3	S14	When the signal is high, the breaker is enabled. Switch position (1-2) disables the input.
J14-2	Breaker enable 4	S15	When the signal is high, the breaker is enabled. Switch position (1-2) disables the input.
J14-3	Breaker disable 1	S16	When the signal is high, the breaker is disabled. Switch position (1-2) disables the input.
J14-4	Breaker disable 2	S17	When the signal is high, the breaker is disabled. Switch position (1-2) disables the input.
J14-5	Return	–	Return for breaker enable signals

Table 35: Connector J15, 24 V Pull-up

Connector	Signal Name	Description
J15-1	24V	Current limited 24 V pull-up voltage (2 mA)
J15-2	24V	Current limited 24 V pull-up voltage (2 mA)
J15-3	GND	Return for current limited 24 V
J15-4	GND	Return for current limited 24 V

Table 36: Connector X5, Power Supply

Connector	Signal Name	Description
X5-1	24V	24 V positive supply voltage
X5-2	GND	Ground (return for 24 V supply voltage)
X5-3	PE	Protective earth

7.14.3 LED Display on the Auxiliary I/O Board

There is a four character LED display on the auxiliary I/O board. The display functions in the same principle as the display on the phase modules, but the shown belt and module information is different. See 6.7.7 LED Display on the Phase Module.

Belt information: The belt information indicator tells the number of the channel on the control unit to which the auxiliary I/O board is connected, in this case C5 (see 7.8 Optical Fiber Connections).

The belt information indicator is of type: [ ] [ ] [C] [5].

- The first two digits are empty.
- The last two digits show the number of the channel.

Module information: The module information indicator tells the identification number of the auxiliary I/O board. The number of the first installed board is 14, the second is 15, and so on.

The module information indicator is of type: [PowerID N_] [PowerID _N] [ ] [ ].

- The first two digits show the ID of the auxiliary I/O board.
- The last two digits are empty.

8 Commissioning

8.1 Safety Checks before Starting the Commissioning

Before starting the commissioning, read these warnings.

⚠ DANGER ⚠

SHOCK HAZARD FROM POWER UNIT COMPONENTS

The power unit components are live when the drive is connected to mains. A contact with this voltage can lead to death or serious injury.

- Do not touch the components of the power unit when the drive is connected to mains. Before connecting the drive to mains, make sure that the covers of the drive are closed.

⚠ DANGER ⚠

SHOCK HAZARD FROM TERMINALS

The motor terminals U, V, W, the brake resistor terminals, or the DC terminals are live when the drive is connected to mains, also when the motor does not operate. A contact with this voltage can lead to death or serious injury.

- Do not touch the motor terminals U, V, W, the brake resistor terminals, or the DC terminals when the drive is connected to mains. Before connecting the drive to mains, make sure that the covers of the drive are closed.

⚠ DANGER ⚠

SHOCK HAZARD FROM DC LINK OR EXTERNAL SOURCE

The terminal connections and the components of the drive can be live several minutes after the drive is disconnected from the mains and the motor has stopped. The load side of the drive can also generate voltage. A contact with this voltage can lead to death or serious injury.

- Disconnect the drive from the mains and make sure that the motor has stopped.
  Disconnect the motor.
  Lock out and tag out the power source to the drive.
  Make sure that no external source generates unintended voltage during work.
  To ground the drive input and DC link, close the grounding switch. If there is no grounding switch, make sure that the drive input and DC link are grounded for work. Also ground the motor terminals for work.
  Wait for the DC-link capacitors to discharge fully before opening the cabinet door or the cover of the AC drive. The discharge time is <7 minutes for AFE drives and <21 minutes for 12-pulse drives.
  Use a measuring device to make sure that there is no voltage.

8.2 Operating the Grounding Switch

⚠ DANGER ⚠

SHOCK HAZARD FROM THE DC LINK

A contact with the DC-link voltage can lead to death or serious injury.

- After the AC drive is disconnected from the mains, wait for the DC link to discharge.
  Use a measuring device to make sure that there is no voltage.

1. Turn off the AFE and INU and disconnect the AC drive from the mains (DC link begins to discharge).
2. Lock out/tag out the MV power source.
3. Wait for the DC link to discharge below 50 V DC.

   The discharge time is:
   - <7 minutes for AFE drives.
   - <21 minutes for 12-pulse drives.

   If more DC capacitance than normal is installed, the discharge time can be longer.

4. Measure and make sure that the DC link is discharged before unlocking the grounding switch.
5. Unlock the grounding switch.

   There is a safety solenoid on the grounding switch. The solenoid makes sure that the switch does not close while the DC link is energized or if the mains power is on.
6. Close the grounding switch.
7. Open the power module cabinet.
8. Make sure that the DC-link voltage indication lights on the front of the phase modules are not on.

   See 6.7.7 LED Display on the Phase Module.
9. Make sure that all the blades of the grounding switch are correctly closed.

8.3 Commissioning the Drive

Before starting the commissioning, read the warnings and safety instructions in this manual.

- Fill in the basic information about the job and the motor nameplate data.
- Go through each item in the commissioning checklists.
  - Before power-up.
  - Control and auxiliary power commissioning.
  - Medium-voltage power commissioning.
- Write down any findings or measured values in the comment fields.
- Once each task is completed, mark the completion date and the name of the responsible employee.

8.3.1 Basic Job Information

Table 37: Basic Job Information

Customer		Country	
Project number		Location	
Start date (mm/dd/yy)		Customer ID	
End date (mm/dd/yy)		Drive serial number	
Company personnel		Drive type code	
End customer		Application	

Table 38: Motor Nameplate Data

Motor Nominal Voltage (V AC)	
Motor Nominal Frequency (Hz)	
Motor Nominal Speed (RPM)	
Motor Nominal Current (A AC)	
Motor Power Factor (0–1)	
Motor Nominal Power (kW)	
Transformer Specifications (MVA, Secondary V RMS, %Z)	

8.3.2 Before Power-up Checklist

Table 39: Checklist of Commissioning Tasks to Do Before Power-up

Item	Comments	Date completed (mm/dd/yy)	Employee
Confirm that the ambient conditions are within the specification. See 11.2.6 Cooling.			
Perform system lockout/tagout and grounding of the drive according to specific customer installation procedure.			
Make sure that the mains and motor cables are selected according to the requirements. See 6.2 Mains and Motor Cable Selection.			
Make sure that the MV input/supply cables are connected according to the system schematic and are properly torqued.			
Make sure that the output/motor cables are connected according to the system schematic and are properly torqued.			
Confirm that a wire check of the MV input and output cables has been completed.			
Confirm the proper grounding of the MV cable shields, motor, transformer, and drive cabinet. See 6.4 Grounding.			
Per local electrical codes, verify that the MV drive cabinet is grounded to the earth ground of the facility.			
Confirm that the drive cabinet ground busbars are connected in all sections. See 6.4 Grounding.			
Check the resistances of the grounding connections. Measure both polarities. Resistances to check: • Control system grounding • System safety grounding • Cabinet support • External housing of the cooling fans • Door locks/handles The resistances should be approximately ≤0.5 Ω.			
Confirm that the MV input and output cables have been insulation tested according to local regulations.			
Confirm that there are no power factor correction capacitors connected to the motor cable.			
Check that the optical fiber cables are in good condition and the routing is done in a way, that does not damage the cables. For example, make sure that the maximum bending radius of the cables (25 mm/1 in) is not exceeded.			

Item	Comments	Date completed (mm/dd/yy)	Employee
AFE drive systems Make sure that the phase modules (INU/AFE) are installed correctly: • Cabling/busbars are properly torqued. • Fiber optic wires are connected in correct order. • 24 V DC plug is connected.			
12-pulse drive systems Make sure that the phase modules (INU) and DFE module are installed correctly: • Cabling/busbars properly are torqued. • Fiber optic wires are connected in correct order. • 24 V DC plug is connected.			
12-pulse drive systems Make sure that the DC-link capacitors for DFE are installed correctly: • Cabling/busbars are properly torqued. • Overpressure switch is connected to control.			
Confirm that there is a minimum of 76 mm (3.0 in) from an exposed MV terminal to ground.			
Confirm that there is a minimum of 34 mm (1.35 in) from an exposed MV terminal to opposite polarity.			
Check that the main circuit wiring has correct clearance to ground and no insulated MV cabling (SIWO-KUL) is in contact with opposite phases or the drive enclosure.			
Verify that the INU/AFE phase modules and DFE power module are connected to the correct corresponding input/output busbar terminals (U -> U, L1 -> L1, and so on). See 6.7 Cabling of the Power Modules.			
Check that all cooling hoses are connected from the manifold to the phase modules, DFE module, and inductor heat exchangers. See 5.4.4.2 Cooling System Overview.			
Make sure that the MV drive cooling system has been filled and pressurized with no leaks. See the specifications in 11.2.6 Cooling. See the instructions in 8.4.1 Filling the Liquid Cooling System.			
If applicable, make sure that all cooling valves are opened.			
Make sure that the single-phase control power cables (120/240 V) are connected according to the system schematic in a separate conduit from the MV cabling.			

Item	Comments	Date completed (mm/dd/yy)	Employee
Make sure that the auxiliary (400–480 V AC) power cables are connected according to the system schematic in a separate conduit from the MV cabling.			
Torque all control and auxiliary input power cables after they are connected. See 7.4 Control Unit Cabling and 6.8.1 Low-Voltage Power Supply Connections.			
Confirm that the pre-charge voltage selection board that is installed matches the supplied auxiliary voltage level. See 6.8.3 Location of the Precharge Unit.			
Connect the required customer communication cables and I/O including main breaker control to the MV drive. See the customer drive schematic and 2.5 Main Circuit Breaker.			
AFE drive systems Verify the proper setup of grid voltage feedback. See 8.4.2 Grid Voltage Feedback Configuration.			
AFE drive systems Verify that the PT and TVS fuses are in working condition.			
Confirm that the customer cooling connection is made to the drive cabinet heat exchanger. See 5.4.4.3 Cooling Connections to the Enclosed Drive.			
Make sure that the temperature of the liquid in the secondary circuit is at least 5°C below the temperature level in the primary cooling circuit of the MV drive. The absolute maximum for the secondary circuit liquid temperature is 38°C. See 5.4.3.4 Temperature of the Cooling Liquid.			
Make sure that the flow rate of the customer cooling is greater than or equal to the required flow of the MV Drive. See 11.2.6 Cooling.			
Confirm that the unit is clean and free from any foreign objects (such as nuts, washers, bolts, tools, metal shavings).			
Confirm that there is no condensation inside the drive. See 5.4.3.5 Condensation.			

8.3.3 Control and Auxiliary Power Commissioning Checklist

Table 40: Checklist of Control and Auxiliary Power Commissioning Tasks

Item	Comments	Date completed (mm/dd/yy)	Employee
Remove the control and auxiliary power lockout/tagout so that these LV supplies can be energized.			
Apply 120/240 V single-phase control power. Verify that the voltages are within specification. Record the measurement.	Control voltage: _____ V AC		
Apply 400–480 V AC three-phase power. Verify that the voltages are within specification. Record the measurement.	Auxiliary voltage: _____ V AC		
Verify that the INU/AFE (if applicable), and HX control units are powered on and communicating.			
If required, install software to the AFE/INU/BCU control units. See 8.4.3 Installing Software on the Control Unit. Record the software revision details.	System software revision: _____ Application: _____		
Verify that all the power module LED displays show the correct phase and belt information. See 8.4.4 Verifying the Phase Module Connections. Correct the fiber optic cable sequence if necessary.			
Operate the cooling system manually. • If needed, purge air from the system. • Check for leaks. • Check the liquid temperature. • Check the flow rate. See the cooling specification details in 11.2.6 Cooling.	Flow rate: _____ l/min Static pressure: _____ bar (psi)		
Test the customer I/O signals. Verify that the external customer interlocks operate as intended.			
Make sure that the digital input ground is connected to the digital system ground when floating, or to the control terminal ground. See 7.5.2 Isolation of the Digital Inputs from Ground.			
Perform the commissioning test. See 8.4.5 Commissioning Test.			

8.3.4 Medium-Voltage Power Commissioning Checklist

Table 41: Checklist of Medium-Voltage Power Commissioning Tasks

Item	Comments	Date completed (mm/dd/yy)	Employee
Remove the main power lockout/tagout, so that the main power can be applied.			
AFE drive systems Perform the AFE synchronization test and tuning. See 8.4.6 AFE Synchronization Test.			
12-pulse drive systems Issue the start command to the drive, therefore energizing the DC link through the 12-pulse input.			
Verify the charging of the DC link to the rated level in an acceptable time (below the value programmed for the DC-link timeout: ≤60 s)	Pre-charge time: _____ s Discharge time: _____ s		
Confirm that the INU control unit is giving the "Online and ready" signal.			
Check that the motor parameters have been set in the INU control unit.			
Perform the Motor ID Run (P3.1.2.8.1) with or without rotation. For details, see the VACON® 3000 Application Guide.			
If applicable, make sure that the encoder is connected and configured properly. See 8.4.7 Encoder Setup.			
To verify correct rotation, operate the motor (with the load uncoupled).			
Operate the motor (with the load uncoupled) and incrementally increase the output up to the maximum rated frequency.			
Operate the motor under load. Verify the operation up to full load.			
Tune the control parameters as necessary to achieve the required operational specifications of the application.			

8.4 Commissioning Procedures

8.4.1 Filling the Liquid Cooling System

Before operating a drive, the cooling system must be filled, pressurized, and purged of air. For this procedure, it is assumed that the system is empty of cooling liquid and must be filled. Under normal situations, the system has already been tested before shipping out and typically has some fluid.

Note:

- Accessibility to certain components of the cooling system can be an issue depending on the layout of the drive and/or the heat exchanger unit.
- This guide is not intended to be used as a reference for commissioning cooling systems which are not installed in a VACON® 3000 enclosed drive.
- Operation and maintenance instructions for Adwatec heat exchangers are available for download at Danfoss product materials – Adwatec.

1. To access the inlet and outlet cooling manifolds, locate the cabinet in which the cooling system is installed.

   The location of the manifolds varies depending on the internal layout of the cabinet. Sometimes there might not be access to install quick disconnects to the manifolds. In these cases, it is necessary to connect straight to one of the hoses on the power module instead of the manifold.

   In the example illustration, the inlet and outlet manifolds are easily accessible. The inlet hoses on the manifold are marked with blue tape and the outlet hoses with red tape.

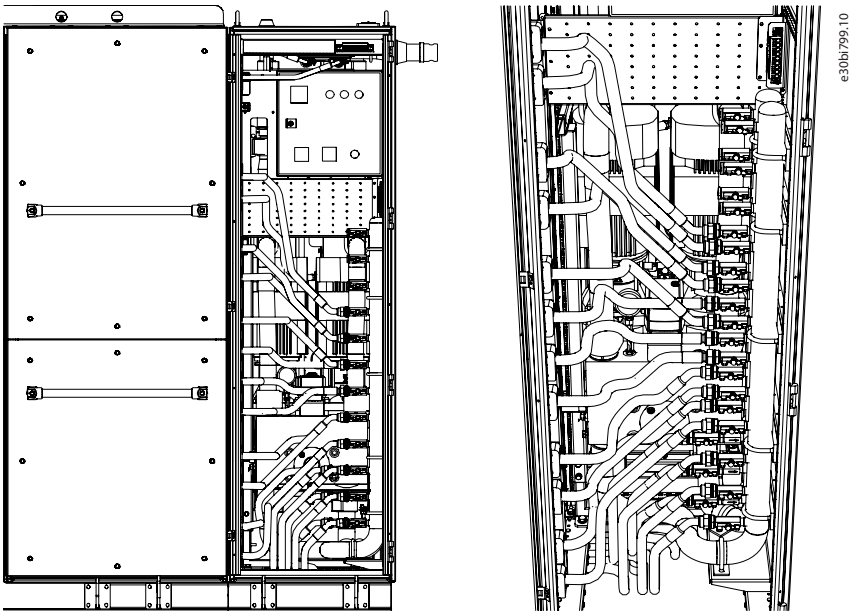

Illustration 64: Cooling Liquid Inlet and Outlet Manifolds

2. Connect the cooling fluid pump assembly to the inlet and outlet manifolds with quick connects (if available). Open the valves.
3. Before filling the system with glycol, verify that all cooling hoses throughout the system are firmly connected and/or torqued. Make certain that any hoses with valves connected to a module have their valves in the open position.
4. Make sure that the automatic air purger on the main heat exchanger is uncapped and its valve is open.

   The air purger is on the main heat exchanger, behind the HX control cabinet. Its location varies depending on the cabinet and heat exchanger design.

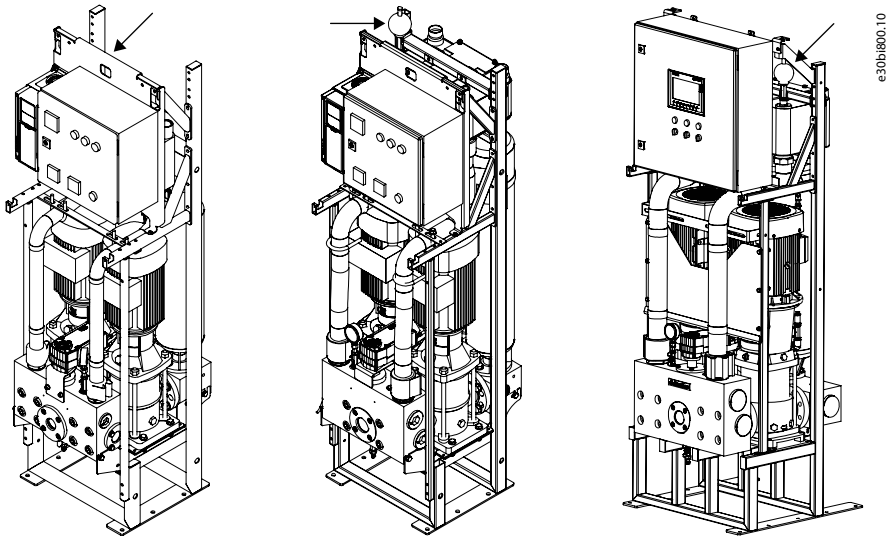

Illustration 65: Air Purger Location

5. Begin running the standalone pump and fill the system. Water should be flowing into the inlet while a combination of water and air pockets/bubbles are flowing out from the outlet. If any leak is detected, immediately shut off the pump.

   The power of the pump and size of the cooling system dictates the flow rate and how quickly the air can be purged from the system. Use an appropriately sized pump. A pump of at least 0.5 hp or greater is ideal.

6. When air bubbles/pockets flowing out of the outlet hose are no longer visible, stop the pump.
7. Close the inlet and outlet valves.
8. Slowly open the air bleeders on the pumps. Air bubbles out. When the bubbling starts becoming only fluid seeping out, close off the bolts to seal the pumps.

   The air bleeders are in the front of the pump, just below the motor. There is one on each of the motor pumps.

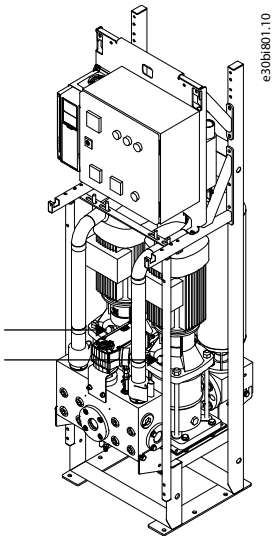

Illustration 66: Air Bleeders on the Pumps

9. Open the inlet and outlet valves and start to run the standalone pump from the glycol tank again.
   a. Run the pump for at least 5 minutes before shutting off.
   b. Close the inlet and outlet valves.
   c. Repeat step 8. There should be fewer air bubbles this time around.
   d. Move to step 10.
10. Pressurize the system.
   a. Open the inlet valve.
   b. Activate the standalone glycol pump.

c. Wait for the pressure to build up to approximately 1.2 bar.
d. Close the inlet valve and turn off the pump.

11. Run the heat exchanger.
    a. Verify that the HX is in ready state (blinking green light).
    b. There are two knobs on the HX control panel. Set the right knob to *P1+P2* and the left knob to *Service*.
    c. The drive of the HX starts to run one of the pumps.
    d. Run the pump for about 5 minutes and stop by turning the left knob back to *0* position.

The HX cooling system requires 480 V AC to run.

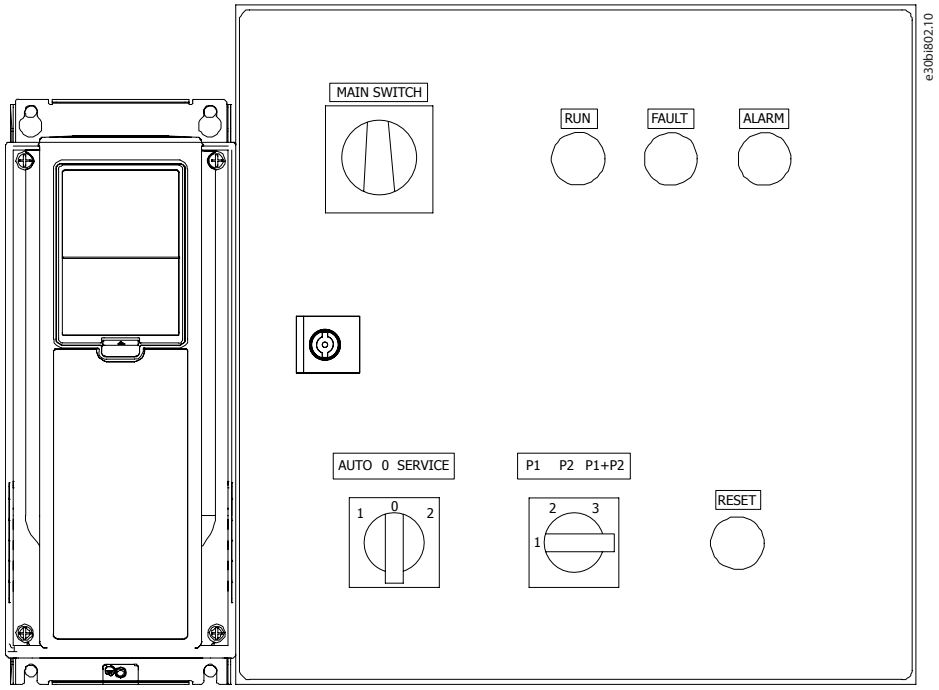

Illustration 67: Heat Exchanger Control Panel

12. Wait ~2 minutes after stopping. Briefly open and close the outlet valve. More air bubbles should come out. Repeat this several times until the pressure is no longer enough to force out any more air pockets.

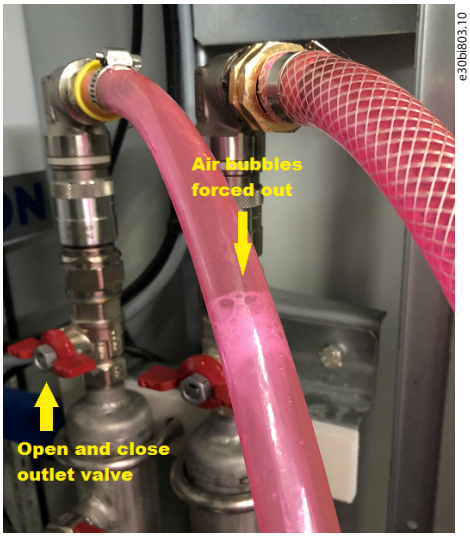

Illustration 68: Removing the Air

13. Run the standalone pump again.
    a. Open the inlet valve.
    b. Start to operate the standalone pump and open the outlet valve.

c. Repeat steps 10–12.

d. After the 2nd cycle, the number of air pockets that are purged should be reduced.

e. Repeat the cycle until there are only few small air bubbles remaining. It is not possible to eliminate all the air bubbles.

14. When the air has been purged, pressurize the system to 1.2 bar with the standalone pump again.

15. Check the fluid level gauge.

There is a tank labeled “Air Filling” to the rear of the cooling system cabinet. The fluid level gauge is connected to this tank. On this gauge, is a marker labeled “nominal level”.

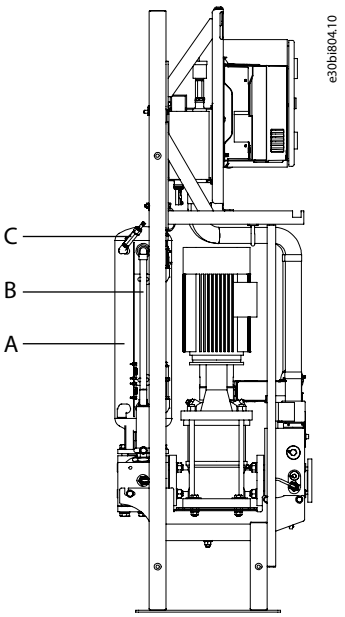

Illustration 69: Location of the Fluid Level Gauge

A	Air filling tank	C	Nozzle
B	Fluid level gauge		

- If the fluid level is above the nominal line: To release excess fluid back into the glycol tank, open the outlet valve. The pressure drops from the 1.2 bar. If the fluid level is still above the “nominal” line after the pressure drops to 0, add air to the “air filling” tank until the fluid level drops to the “nominal” marker.
- If the fluid level is below the nominal line: Bleed air out of the tank by pressing the pin on the nozzle. The fluid level on the gauge climbs while the pressure decreases from 1.2 bar. Operate the standalone pump and repressurize. The goal is to be at or slightly above the nominal marker while having 1.2 bar of pressure.

8.4.2 Grid Voltage Feedback Configuration

Grid voltage feedback is a critical component of AFE drives. It must be correctly connected and configured for an AFE drive to be able to properly synchronize with the MV input supply voltage of the drive.

Grid voltage feedback is also necessary to perform the commissioning test. For the commissioning test to be done safely, it must be able to detect whether there is mains power applied to the drive (that it is not powered).

1. Locate the grid voltage feedback connector on the AFE control unit. It is located next to the FO1–FO6 fiber optic slots.

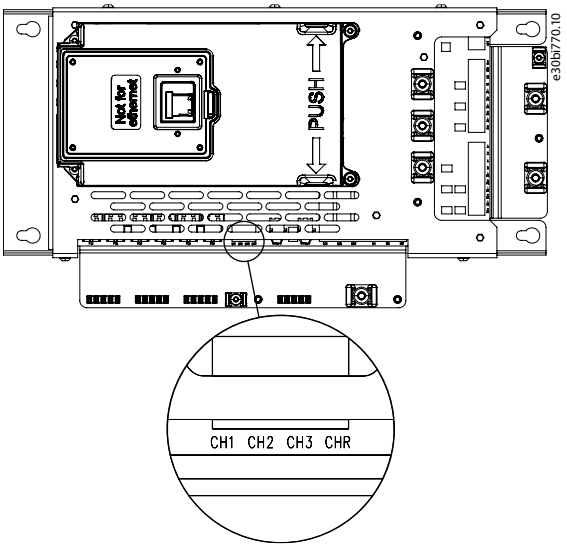

Illustration 70: Grid Voltage Feedback Connector on the AFE Control Unit

2. Identify the type of potential transformer that is connected from the MV supply to the drive. The feedback configuration is either Wye or Delta.
3. Connect the grid voltage feedback to the AFE control unit based on the PT type.
   - **If the PT is WYE configured:**

     Connect phase A to CH1.

     Connect phase B to CH2.

     Connect phase C to CH3.

     Connect the reference to CHR.

     Go to the 2.1.1 Line Configuration menu and do these parameter settings:

     Grid Voltage FBK Ch A: AN phase voltage

     Grid Voltage FBK Ch B: BN phase voltage

     Grid Voltage FBK Ch C: CN phase voltage
   - **If the PT is Delta configured:**

     Connect phase A to CH1.

     Connect phase B to CHR.

     Connect phase C to CH3.

     Leave CH2 empty.

     Go to the 3.1.1 *Line Configuration* menu and do these parameter settings:

     Grid Voltage FBK Ch A: AB line voltage

     Grid Voltage FBK Ch B: Ground/reference

     Grid Voltage FBK Ch C: CB line voltage
4. Set the other parameters in the 3.1.1 *Line Configuration* menu.
   - **a.** Nominal Grid Voltage/Frequency: Set to the rated input voltage/frequency of the drive.
   - **b.** Grid Voltage FBK Mode: Set to "Source Voltage".
   - **c.** Grid Voltage FBK Scale: Set based on the expected voltage on the PT secondary. For example, a 35:1 PT ratio at 4160 V equals ≈ 118.8 V secondary voltage.
   - **d.** Filter Topology: Set to "LCL".
   - **e.** Regen Filter Select: Select based on the type of phase modules used in the drive.

     For example, L20.4, where L20 is the phase module size (L20 or L30) and 4 stands for the input voltage (3=3300 V and 4=4160 V).

f. Special Filter Index: Set to 21000.

8.4.3 Installing Software on the Control Unit

To install the software, each control unit must be connected to separately. After finishing one software installation, disconnect the cable and move it to the next control unit. Make sure that the correct control unit (AFE/INU/BCU) is connected to the PC.

Items required for the software installation:

- RS485 to USB cable.
- PC or laptop.
- The VACON® Live PC tool.

Download VACON® Live from .

1. Verify that the control unit is powered (the screen on the control panel is on).
2. Verify that the indicator light on the control unit is green (there are no faults).
   - If the indicator light is green, skip to step #3.
   - If the indicator light is red, check the number of the fault. If the fault code is 59 (communication fault), one or more of the power modules is likely disconnected.

     Before opening the cover of the power module section to check the connections, verify that medium voltage is locked out.

     Check the modules and verify that the fiber optic cables and the 24 V DC supply are properly connected.

     Verify that all the indicator lights are lit on each of the modules.

     When the communication fault is cleared, continue to the next step.

     If there are still issues with the fault, refer to *INU and AFE phasing* procedure for troubleshooting.
3. To access the RS485 port, remove the control panel from the control unit.
4. Connect the RS485 end of the cable to the port on the control unit and the USB end to a PC.
5. Open the VACON® Live PC tool. When prompted for startup mode, select *Online*.
6. After VACON® Live completes searching for connected drives, select the drive, and click *Connect to Selected*.

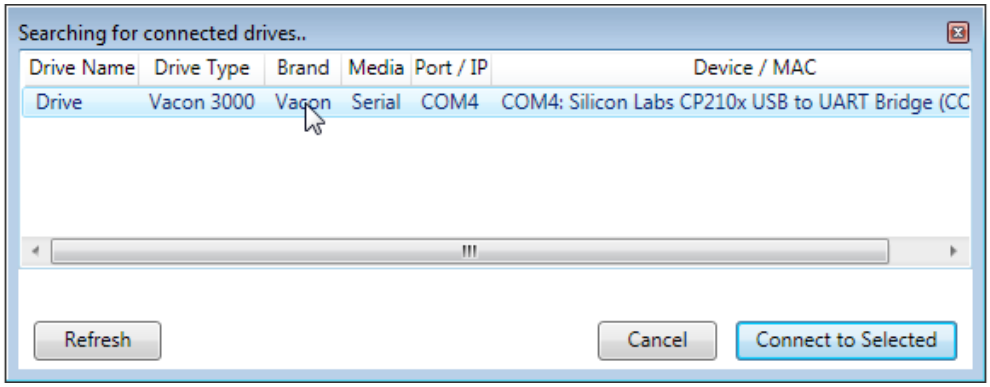

Illustration 71: Connecting to the Drive with VACON® Live

7. After VACON® Live opens, save the current parameter settings.
   a. Open the *File* menu and select *Save file as*….
   b. Select an appropriate file name (for example, customer name_drive identity_date).
   c. Save the file into a folder/location that coincides with the contents of the file.
8. Obtain an up-to-date software build directly from the Danfoss server or request one from the Danfoss software team.

   The software build is a file with a ".vcx" extension.
9. Click this file, and VACON® Loader opens automatically. If VACON® Live is still open, you are prompted to close it.
10. Click *Next* to begin.
11. The same procedure as in VACON® Live for connecting to the drive occurs (step 6). After searching for connected drives is completed, select the drive, and click *Connect to Selected*.

12. Select the appropriate modules to be installed. The modules selected vary depending on the control unit and the drive type.

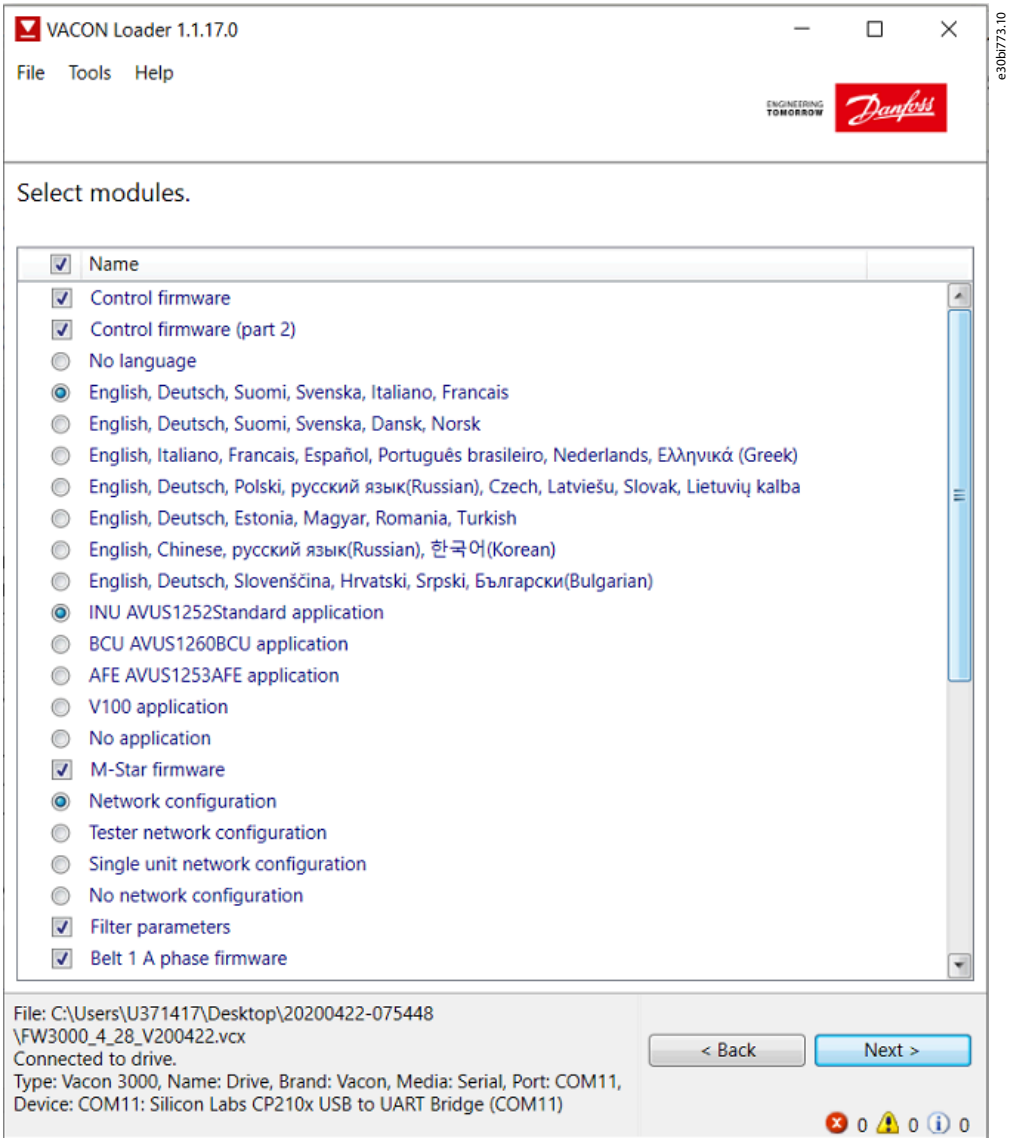

Illustration 72: Selecting the Modules to Install in VACON® Loader

- **Modules to install for AFE control unit in AFE drive**

  Control firmware

  Control firmware (part2)

  Select appropriate language

  AFE AVUS1253AFE application

  M-star firmware

  Network configuration

  Filter parameters

  Belt 1 A phase firmware

  Belt 1 B phase firmware

  Belt 1 C phase firmware

  If the AFE drive has a parallel module configuration, also select the following modules:

  Belt 2 A phase firmware

  Belt 2 B phase firmware

Belt 2 C phase firmware

If the AFE drive has an Auxiliary I/O board, select the following modules:

Channel 4 Index 1 AUX firmware

No position 2 firmware

No position 3 firmware

If the AFE drive has no Auxiliary I/O board, select the following modules:

No position 1 firmware

No position 2 firmware

No position 3 firmware

- **Modules to install for INU control unit in AFE drive**

  Control firmware

  Control firmware (part2)

  Select appropriate language

  INU AVUS1252INU application

  M-star firmware

  Network configuration

  Filter parameters

  Belt 1 A phase firmware

  Belt 1 B phase firmware

  Belt 1 C phase firmware

  If the drive has a parallel module configuration, select the following modules:

  Belt 2 A phase firmware

  Belt 2 B phase firmware

  Belt 2 C phase firmware

  For the INU control unit of an AFE drive, there are no Auxiliary I/O board settings since the Auxiliary I/O board is already connected to the AFE control unit. Select the modules:

  No position 1 firmware

  No position 2 firmware

  No position 3 firmware

- **Modules to install for INU control unit in 12-pulse drive**

  Control firmware

  Control firmware (part2)

  Select appropriate language

  INU AVUS1252INU application

  M-star firmware

  Network configuration

  Filter parameters

  Belt 1 A phase firmware

  Belt 1 B phase firmware

  Belt 1 C phase firmware

  If the drive has a parallel module configuration, select the following modules:

  Belt 2 A phase firmware

  Belt 2 B phase firmware

  Belt 2 C phase firmware

  If the 12-pulse drive has an Auxiliary I/O board, select the following modules:

Channel 4 Index 1 AUX firmware

No position 2 firmware

No position 3 firmware

Also select the following modules:

Channel 4 Index 1 CBL firmware

No position 2 firmware

No position 3 firmware

- **Modules to install for CBU control unit in 12-pulse drive (optional)**

  Control firmware

  Control firmware (part2)

  Select appropriate language

  BCU AVUS1260BCU application

  Single unit network configuration

  Belt 1 A phase firmware

13. When the appropriate modules are selected, click *Next* to begin the installation.

    The loading time takes upwards of 30 minutes to complete depending on how many modules are loaded.

14. After the loading is completed, click *Yes* to close VACON® Loader.
15. If the loading fails to reach 100% completion and stops, try again starting from step 8. Before attempting to reinstall:
    a. Check that the core board is fully seated on the auxiliary I/O board.
    b. Check that the fiber cable from the auxiliary I/O board to the appropriate control unit is connected in the correct ports at both ends.
16. After the software loading is completed, perform a parameter compare between the new parameter set and the parameter settings saved in step 7.

    See the instructions for comparing the parameters in the VACON® 3000 Application Guides.

8.4.4 Verifying the Phase Module Connections

Before running the drive for the first time, verify the phasing of the INU and/or AFE modules. The verification is done both physically (cabling, busbars) and electrically (identified with 24 V DC control power and fiber optic communication cables).

1. Obtain a copy of the mechanical drawings of the drive and identify the locations of the phase modules.
2. Perform a continuity check of the phase module terminal connections.
   a. For INU modules, check the continuity of the connections from the output on the phase module to its corresponding output busbar terminal.
   b. For AFE modules, check the continuity of the connections from the output to the L1, L2, L3 busbars where the main input supply voltage cables are mounted.
   c. For dual-belt drives, do the same for the other belt.
3. Verify, that the fiber optic cables are connected properly between the control units and phase modules.

   The fiber from the FO1 slot on the control unit connects to the fiber connector A on either the INU U-phase module or the AFE L1-phase module. The control unit automatically designates the phase module connected to FO1 as a U-phase module (if INU control unit) or L1-phase module (if AFE control unit).
   See 7.8 Optical Fiber Connections.
4. For the remaining module-to-module connections, connect the optical fiber from connector B of the U-phase module to connector A of the next module (which is then designated as V-phase). Then connect the optical fiber from connector B of the V-phase module to connector A of the next module (W-phase). Leave connector B of the last module (W-phase) empty.

   The AFE connections are the same, except the designations for the modules are L1, L2, and L3.
5. If the connections are correct and control power is applied, then the phase modules show the correct belt and phase information on the 4-character LED displays.

   In the operation mode, the LED display view changes at an interval of 3 s. The display changes between the belt information indicator and the module information indicator. See 6.7.7 LED Display on the Phase Module.

- INU, belt 1
  - Module 1: __B1 and _2_U
  - Module 2: __B1 and _3_V
  - Module 3: __B1 and _4_W
  - INU, belt 2 (if applicable)
  - Module 4: __B2 and _5_U
  - Module 5: __B2 and _6_V
  - Module 6: __B2 and _7_W
- AFE, belt 1
  - Module 1: __B1 and _2L1
  - Module 2: __B1 and _3L2
  - Module 3: __B1 and _4L3
  - AFE, belt 2 (if applicable)
  - Module 4: __B2 and _5L1
  - Module 5: __B2 and _6L2
  - Module 6: __B2 and _7L3

6. Confirm that the identification on the LED displays matches the correct input or output terminal that the phase module is connected to.

8.4.5 Commissioning Test

The commissioning test verifies that the drive can be successfully operated without applying medium voltage to the main power terminals (L1, L2, L3). The purpose of the test is to verify operation of the system interlocks and that the pre-charge circuit can close the contactor that supplies medium voltage to the drive.

- This test does not power up the drive.
- This test does not run if:
  - Medium voltage is detected on the input to the mains contactor.
  - The pre-charge unit has 480 V AC supply power and is connected to the circuit.
- If either of these two conditions is present, the control unit generates a fault.

The following procedures must be completed before performing the commissioning test:

- INU/AFE module installation.
- INU/AFE phasing (see 8.4.4 Verifying the Phase Module Connections).
- Software download (see 8.4.3 Installing Software on the Control Unit).
- Cooling fluid addition (see 8.4.1 Filling the Liquid Cooling System).
- Insulation test of the MV input and output cables.
- Grid voltage feedback configuration (see 8.4.2 Grid Voltage Feedback Configuration).

Remove power from the input to the main supply power contactor or main circuit breaker (MCB).

The drive controls switchgear external to the drive to supply utility voltage to the drive. There is no main circuit breaker internal to the drive that opens/closes the voltage on the supply terminals (L1, L2, L3). The lockout/tagout procedure must be properly performed.

1. To prevent accidental charging of the DC link, open the circuit breaker that supplies 480 V AC to the pre-charge unit.

   The circuit breaker is in the control compartment. See the wiring diagrams delivered with the drive.

2. Verify that there was no mistake in the control power wiring and that there is no shock hazard.
   a. On the INU phase modules, disconnect the 24 V DC connector.

      See 6.7.1 Phase Module L20/L30 Terminals.

   b. Use a DMM in V AC mode and measure from the +24 V and 0 V terminals to GND.

3. Verify that the "breaker enable" DIP switches are in the correct position.

The DIP switches (S1) are on the INU/AFE control unit between fiber optic connectors FR1 and FR2. These two fiber optic inputs are used for the "breaker enable" function. If the DIP switches are in the correct position, a green LED next to the switches is on.

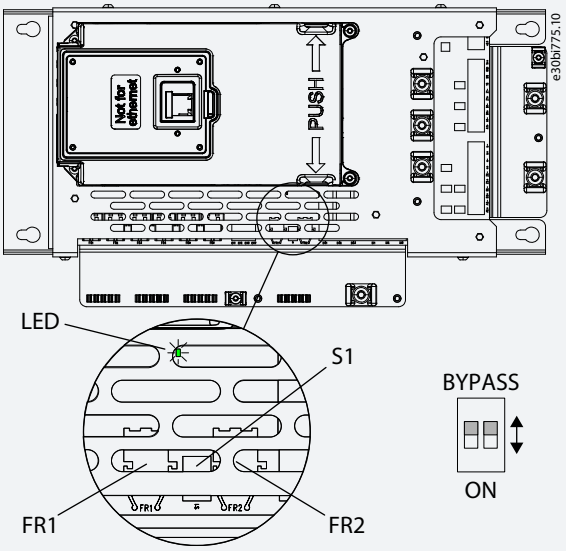

Illustration 73: "Breaker Enable" Connectors, DIP Switches, and LED

- If the "breaker enable" function is not used, the fiber optic connectors are plugged. Check that both DIP switches are in the "bypass" position.
- If one or both of the "breaker enable" inputs are used, then the corresponding DIP switches must be in the "on" position.

4. In VACON® Live, make sure that “PCC Gating Enabled” is checkmarked in the **Precharge Status Word**. If the breaker enable is not properly set, then the commissioning test fails due to failure to receive MX close feedback.

Location of **PreCharge Status Word** in the menu:

- INU application: V2.12.4
- AFE application: V2.10.4

5. Set the **Commissioning test mode** parameter to Enable.

Parameter location in the menu:

- AFE drives: P3.3.5.3
- 12-pulse drives (INU application): P3.17.5.3

6. The commissioning test can then be performed with the HMI touch screen or with the VACON® Live PC tool.
   - Commissioning test with the HMI touch screen, see 8.4.5.1 Commissioning Test with HMI Touch Screen.
   - Commissioning test with the VACON® Live PC tool, see 8.4.5.2 Commissioning Test with VACON® Live.

8.4.5.1 Commissioning Test with HMI Touch Screen

1. Select the *Start Cond* tab on the HMI, and check that all the interlocks are made. The power-up sequence starts only if all boxes are highlighted in green.

If a condition is not met, the box is solid black and it must be addresses before the test can be performed.

2. Give the system a *Power On* command.

The location of the *Power On* command in the menu varies depending on the type of drive (12-pulse or AFE).

3. Check that the cooling system starts. The drive of the heat exchanger runs and the HX circulates the cooling liquid.
4. Check the *PLC Status*. It should show **Charging**, but the **DC-link voltage** should not charge (should be 0 V DC).

5. Check that the main contactor closes after the DC pre-charge timeout has elapsed.

   The location of the **DC Precharge Timeout** parameter:
   - AFE application: P3.3.4.9
   - INU application (12-pulse): P3.17.4.9

6. After the mains contact has been closed, give the system a *Power Off* command.
7. Set the **Commissioning Test Mode** parameter to Disabled.

8.4.5.2 Commissioning Test with VACON® Live

1. In VACON® Live, go to the *Precharge* monitoring menu. To see if the drive is ready to attempt a commissioning test, check the monitoring values **Precharge State** and **PowerOn State**.

   AFE application:
   - *Precharge* monitoring menu: M2.10
   - **Precharge State** monitoring value: V2.10.1
   - **PowerOn State** monitoring value: V2.10.5.1

   INU application (12-pulse):
   - *Precharge* monitoring menu: M2.12
   - **Precharge State** monitoring value: V2.12.1
   - **PowerOn State** monitoring value: V2.12.5.1

   If either of the two values is not in "ready" state, then an interlock is active and must be resolved before the commissioning test can be attempted. Determine what is missing (which unchecked box must be checked), and check the hardware and/or I/O settings of the device which is failing to give the required feedback.

2. Right-click the **PowerOn State** parameter, select *To Monitoring*, and then *New Monitor*. This value is then used to determine whether the commissioning test is completed successfully.

   If **Precharge State** and **PowerOn State** are both "ready", then **PowerOn State** has a value of "3" when viewed with the monitoring function.

3. Give the system a "power on" command.
   a. Go to the **Internal Control** menu.
   b. Change the value of parameter **Power Off** to "DigIN Slot0.2".
   c. Change the value of parameter **Power On** to "DigIN Slot0.2".

   AFE application:
   - *Internal Control* menu: M3.3.2.2
   - **Power Off** parameter: P3.3.2.2.2
   - **Power On** parameter: P3.3.2.2.1

   INU application (12-pulse):
   - *Internal Control* menu: M3.17.2.2
   - **Power Off** parameter: P3.17.2.2.2
   - **Power On** parameter: P3.17.2.2.1

4. Check that the cooling system starts.
   a. Check that the drive of the heat exchanger runs and the HX circulates the cooling liquid.
   b. Check that the **PowerOn State** changes to "4" when the HX starts.
5. Keep monitoring **PowerOn State**. After a while, the system starts to pre-charge the DC link. In reality, there is no voltage being generated in the DC link. The value set in parameter **DC Precharge Timeout** starts to count down. **PowerOn State** shows a value of "5" during the countdown.

   The location of the **DC Precharge Timeout** parameter:

- AFE application: P3.3.4.9
- INU application (12-pulse): P3.17.4.9

6. Keep monitoring **PowerOn State**. After the time programmed into **DC Precharge Timeout** elapses, the mains contactor closes, and **PowerOn State** changes states to 6, 7, and 8 in succession.

- State 6 indicates completion of precharge and closing of the mains contactor.
- State 7 indicates opening of the precharge contactor.
- State 8 indicates that the drive is now ready to be issued a start command to operate the motor and that the commissioning test was successful.

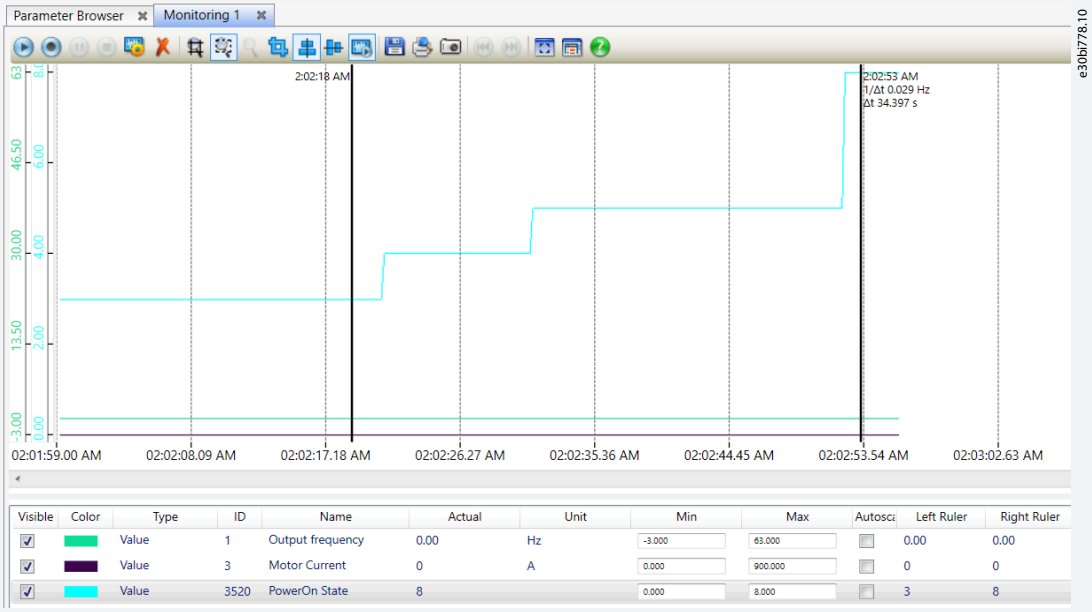

Illustration 74: Monitoring the PowerOn State Parameter

7. After the mains contact has been closed, give the system a "power off" command by changing **Power On** and **Power Off** in the *Internal Control* menu back to "DigIN Slot0.1".
8. Set the **Commissioning Test Mode** parameter to Disabled.

8.4.6 AFE Synchronization Test

⚠ D A N G E R ⚠

SHOCK HAZARD DURING TEST

It is necessary to keep the cabinet doors open for this test. Measuring instruments are attached on cabling or busbars which have live medium voltage during the test. Contact with this voltage can lead to death or serious injury.

– Perform proper lock-out and tag-out procedure before the test setup. Stay away from the drive while the test is being performed.

The purpose of this test is to verify that the AFE can properly synchronize to the voltage and phase of the main voltage supply. This test does not apply to 12-pulse (DFE) drives.

Important notes about this test:

- The mains contactor does not close during this test.
- The control unit pre-charges the DC link during this test.
- The performing of this test can conflict with safety regulations. Special allowances to perform this procedure must be discussed before the beginning of commissioning.

Perform the commissioning test before this test. See 8.4.5 Commissioning Test.

An oscilloscope is required to record the voltage waveforms on each side of the mains contactor.

1. The main contactor is not housed inside the drive cabinet. Instrumentation must be done in the switchgear cabinet of the end user, which can conflict with the electrical safety regulations of the facility, and access may not be permitted.
   - If it is possible to make the instrumentation in the switchgear cabinet, connect the oscilloscope on each side of the mains contactor.

     MV supply voltage L1-L2: Connect red probe to L1 and black probe to L2 on the input side of the contactor.

     MV supply voltage L2-L3: Connect red probe to L2 and black probe to L3 on the input side of the contactor.

     AFE voltage L1-L2: Connect red probe to L1 and black probe to L2 on the output side of the contactor.

     AFE voltage L2-L3: Connect red probe to L2 and black probe to L3 on the output side of the contactor.

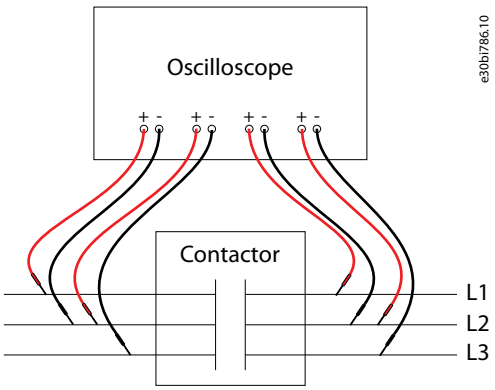

Illustration 75: Oscilloscope Connections for the Voltage Measurements

   - If access to the switchgear cabinet is not permitted, the 120 V AC signal from the grid voltage feedback must be compared with the voltage captured on L1/L2/L3. Thus, all scope testing points are local to the drive.

     Instrument the scope to L1/L2, L2/L3, and the corresponding phases coming from the stepped down LV side of the PT. The stepped down voltages connect to the grid voltage feedback connector on the AFE control unit.

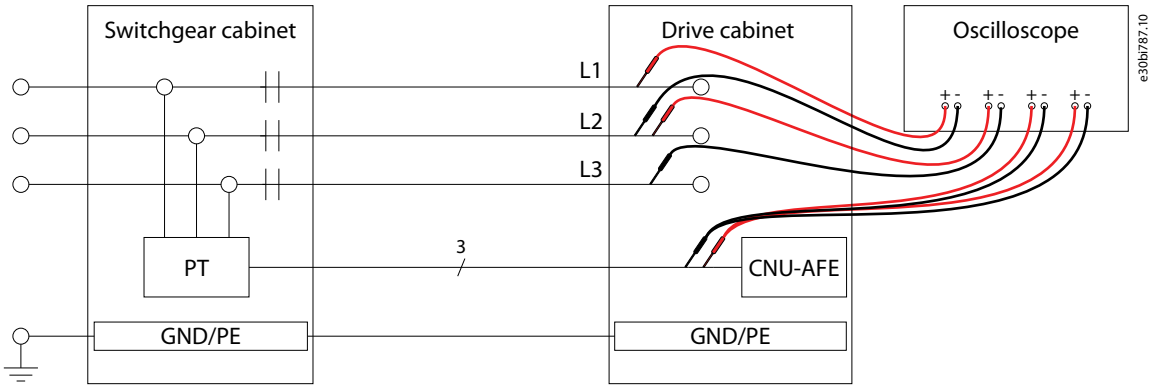

Illustration 76: Alternative Oscilloscope Connections for the Voltage Measurements

2. Configure the oscilloscope.
   - **a.** Set 5 kV per division (Y-axis) on the channels measuring L1/L2 and L2/L3 voltages (output side of MV feeder cabinet).
   - **b.** Set 200 V per division on the channels measuring the MV supply voltage through PT secondaries (corresponding to input side of contactor in MV feeder cabinet).
   - **c.** Set the time base to 10 ms per division (X-axis).
   - **d.** Set the trigger to the rising edge on either channel of the output (AFE side). 1500 V is enough.
3. Open the grounding switch.
4. To prevent the drive from closing the main contactor that links the AFE output to the MV supply, set the parameter P3.3.5.4 **Synchronization Test Mode** on the AFE control unit to "Enable".
5. Apply power to the auxiliary voltage input of the drive. Verify that the necessary circuit breaker to activate the pre-charge unit is closed. If applicable, do the same for the cooling system (HX).

Auxiliary voltage required for the pre-charge:

- 3300 V drives: 380–440 V ±10%
- 4160 V drives: 460–480 V ±10%

In the example diagram, the circuit breakers FC11 and FC12 must be closed.

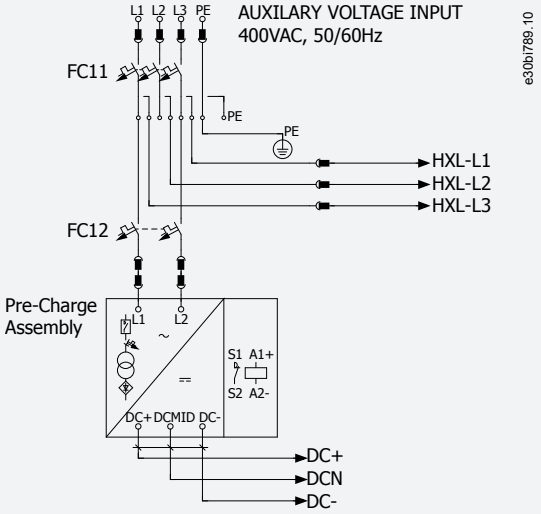

Illustration 77: Circuit Breakers for the Auxiliary Supply

6. Apply MV supply power to the input of the contactor.
7. Verify that this voltage is visible in VACON® Live. Go to the M2.3 **AFE Monitor** menu and parameter M2.3.2 **Line PLL**.

The line voltage and line frequency must correspond to the rated input of the drive. If it does not, the grid voltage feedback is not properly set up and the power on command does not become available.

The MV supply voltages are the yellow and pink waveforms in the screen capture. The AFE outputs are flat, since the drive is not operating. When operating properly, the AFE waveforms almost perfectly superimpose on top of the mains waveforms.

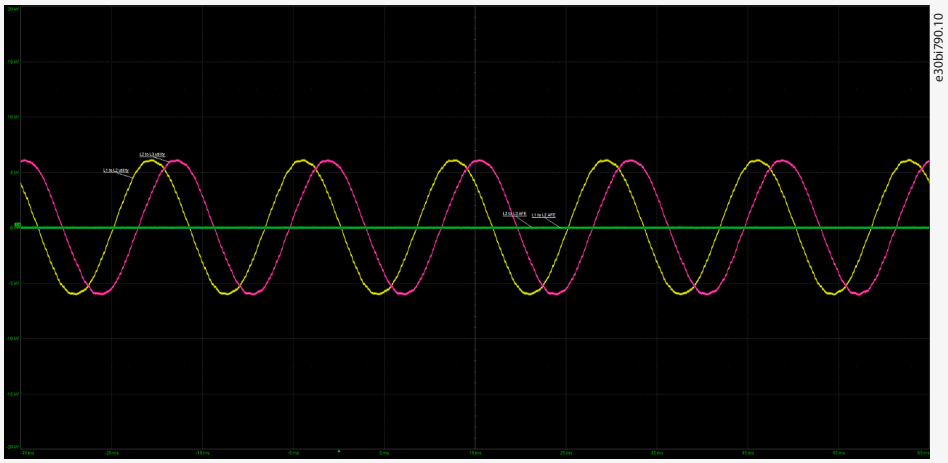

Illustration 78: MV Supply Voltage Waveforms

8. Start any other auxiliary systems needed for operation.
9. Make sure that there are no interlocks preventing the drive from being able to start.

The drive does not actually start in synchronization test mode.

10. Give the system a "Power Up" command.

After the "Power Up" command is received:

If all the interlocks are made, the power-up sequence starts.

The cooling system starts.

The pre-charge circuit charges the DC-link.

The AFE activates to generate voltage on the downstream side of the mains contactor.

After approximately a second of operating the AFE, the system trips on "pre-charge supervision" because the pre-charge sequence was interrupted (no contactor feedback).

11. Compare the mains voltage to the AFE generated voltage. The AFE generated voltage must complete the synchronization by its 4th cycle from start up.

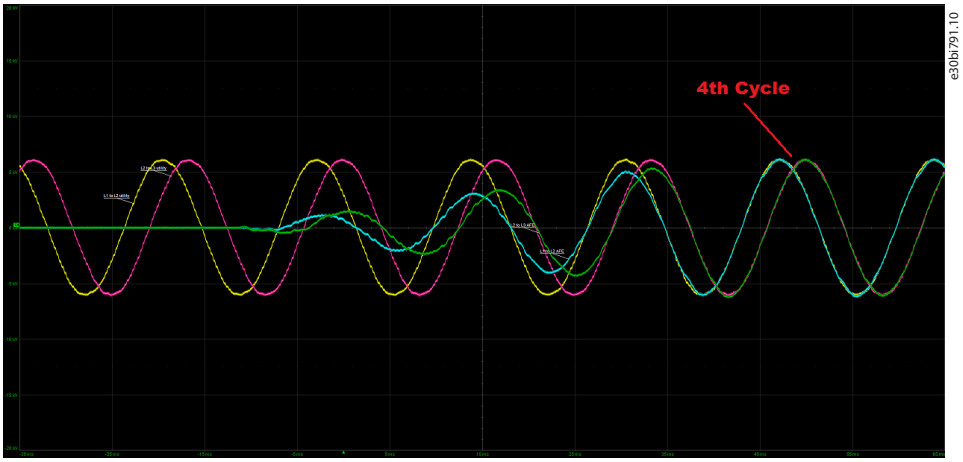

Illustration 79: Synchronization Test Screen Capture

12. Use the zoom function of the scope and look at the 0 V crossing. Measure the approximate time delay using the cursor function.

The waveforms must match with a delay of less than 100 µs. In the example, the delay is ~52 µs on the L2-L3 phase and even less on L1-L2 phase. This result is good and no further tuning is required.

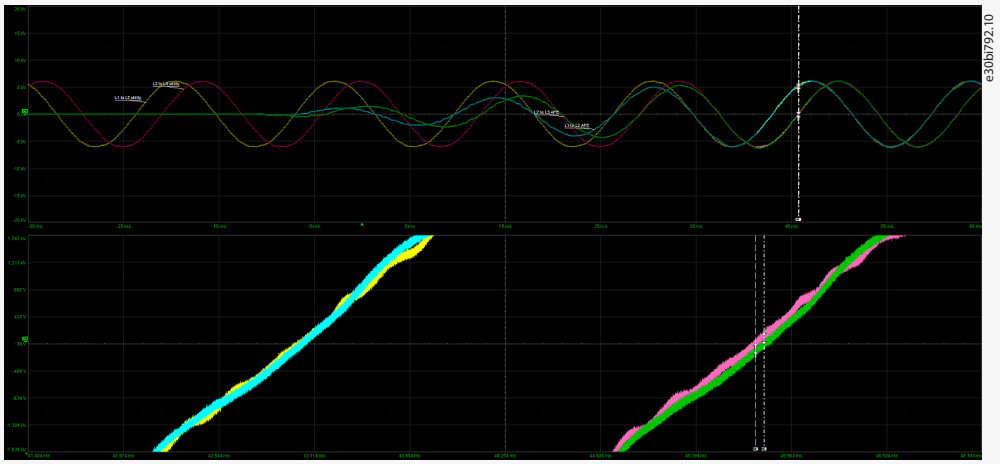

Illustration 80: Acceptable Time Delay

If the delay is more than 100 µs, adjust the **Ref Frame Adapt Angle** parameter P3.2.5.5 on the AFE control unit. Perform the test again until an acceptable result is reached. The typical adjustment range is between -5 and +5.

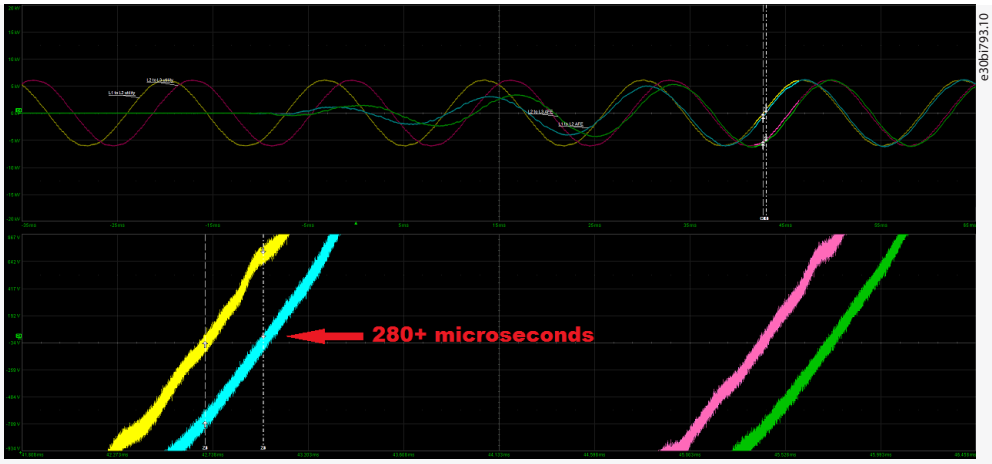

Illustration 81: Unacceptable Time Delay

13. After successfully matching the waveforms, set parameter P3.3.5.4 **Synchronization Test Mode** on the AFE control unit to "Disable".
14. The AFE now requires tuning to optimize the power factor of the drive. The same parameter that was adjusted in the synchronization test is used for this procedure.
    a. Confirm that the drive is ready to be fully energized.
    b. Close the mains contactor.
    c. Energize the drive, but the drive does not need to output voltage to the motor.
15. In VACON® Live, monitor the V2.3.3.3 **Grid Active Current** while adjusting the **Ref Frame Adapt Angle** parameter P3.2.5.5.
16. While adjusting the **Ref Frame Adapt Angle**, take note of which direction the current goes. Adjust the angle so that the **Grid Active Current** is close to zero.

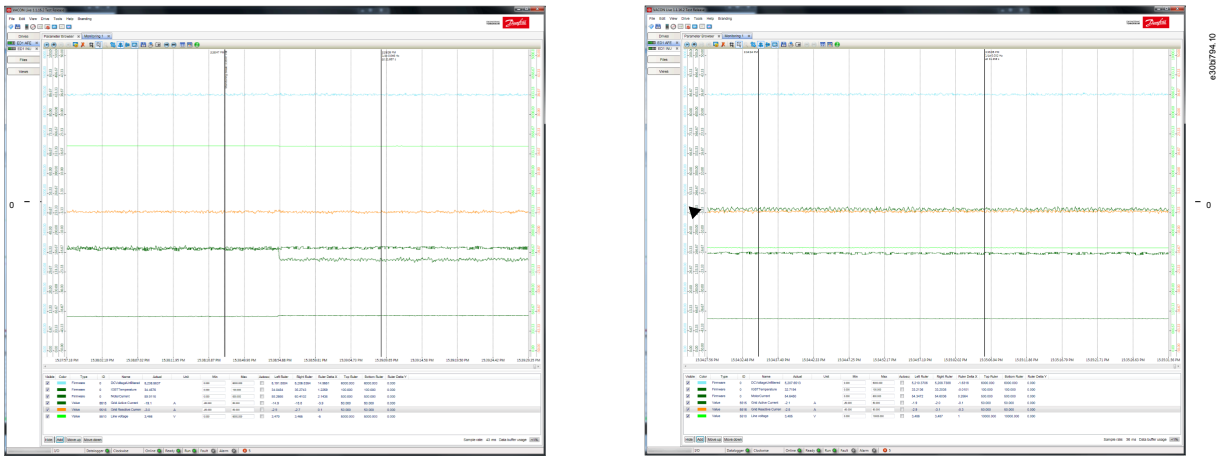

Illustration 82: Monitoring Grid Active Current while adjusting Ref Frame Adapt Angle

17. To measure the synchronization delay again, reperform the synchronization test.

If the delay is over 100 µs, it is acceptable as long as the drive does not trip at energization. For operation purposes, the tuning to minimize **Grid Active Current** takes higher priority because it affects power factor.

8.4.7 Encoder Setup

Closed loop Vector Control requires an encoder installed on the motor. The encoder wiring is connected to channel A on the INU control unit. The objective of this procedure is to verify that the encoder wiring is connected to the proper terminals and to set the encoder parameters in the INU control unit.

1. Locate the encoder terminal blocks on the INU control unit. The encoder wiring is connected to channel A (unless a 2nd control unit is set up as a follower).

See 7.9 Encoder Interface.

2. Obtain the pinout diagram for the encoder connector.
3. Connect the encoder wiring to the corresponding position on the control unit terminal block.

   See 7.9.1 Encoder Terminals and Signals.
4. Set the encoder jumpers on the control unit according to the specifications.

   See 7.9.2 Encoder Jumper Configurations.
5. Use the VACON® Live PC tool to connect to the INU control unit.
6. Open menu M3.15 **Encoders** and set the encoder parameters.
   a. Set parameter P3.15.4.9 **Encoder Resolution**.
   b. Set parameter P3.15.4.10 **Motor Pole Pairs**.
   c. Set parameter P3.15.4.13 **Filter Time Constant**.
   d. The rest of the parameters can most likely remain at default settings.
7. Test the encoder in open loop configuration.
   a. Open the menu M3.1.2 **Motor Control** and set the parameter P3.1.2.1 **Control Mode** to "OL Speed Ctrl".
   b. Open the menu M3.1.5 **Flux Vector Control** and set the parameter P3.1.5.1 **Sensorless Ctrl** to "Disabled".
8. Use the VACON® Live monitoring to verify that the encoder feedback (V2.10.3.6 **Encoder Elec. Freq.**) matches the output frequency of the drive (V2.3.1 **Output Frequency**) while the drive is in operation. Confirm the matching values up to 100% speed through monitoring.
9. When the encoder operation is confirmed, stop operation of the drive.
10. Set the drive to closed-loop operation.
    a. Open the menu M3.1.5 **Flux Vector Control** and set the parameter P3.1.5.1 **Sensorless Ctrl** to "Enabled".
    b. Set the **Sensorless Ctrl Options** with parameter P3.1.5.3.

       Make sure that these options are selected:
       - "Ena Flux Controller"
       - "Use Curr Ref. in Model"
       - "Ena Ramp AntiWindup"
       - "Ena CL Control"
       - "CL Flying Start"

8.5 Insulation Resistance Measurements

8.5.1 Measuring the Switchgear Insulation Resistance

The measurement of the switchgear insulation resistance is a standard procedure.

Measure the insulation resistance and refer to the test voltages in Table 42. Use Megger test equipment or an equivalent instrument for the measurement. Make sure that the test device can supply a 1 mA current at the measurement voltages.

Before the measurement:

- Disconnect the N/PE (PEN) connection (TN-C-S systems only).
- Open the grounding switch (GSW).
- If the circuit contains AC drives, only do the measurement from L1-L2-L3-(N) to frame.
- Measure the insulation resistance between all connected phases (also N) and the frame.

During measurement, make sure that the switches are in the off position and that there are fuses installed. Make sure that the switchgear is in normal operation condition but with all operated equipment (for example, motors) disconnected.

Table 42: Insulation Resistance Measurement Voltages and the Minimum Permitted Insulation

Circuit U_n	Test voltage	Insulation resistance[1]
≤ 500 V	500 V DC	≥ 0.5 MΩ
> 500 V	1000 V DC	≥ 1.0 MΩ

[1] The number of devices connected can lower the values. If the results are much lower than the values in the table, speak to the manufacturer.

8.5.2 Measuring the Cable and Motor Insulation

Do these checks if necessary.

NOTE! AC drive is already measured at the factory.

- The insulation checks of the motor cable, see 8.5.2.1 Insulation Checks of the Motor Cable
- The insulation checks of the mains cable, see 8.5.2.2 Insulation Checks of the Mains Cable
- The insulation checks of the motor, see 8.5.2.3 Insulation Checks of the Motor

8.5.2.1 Insulation Checks of the Motor Cable

Use these instructions to check the insulation of the motor cable.

Procedure

1. Disconnect the motor cable from the terminals U, V, and W and from the motor.
2. Measure the insulation resistance of the motor cable between phase conductors 1 and 2, between phase conductors 1 and 3, and between phase conductors 2 and 3.
3. Measure the insulation resistance between each phase conductor and the grounding conductor.
4. The insulation resistance must be >1 MΩ at the ambient temperature of 20 °C (68 °F).

8.5.2.2 Insulation Checks of the Mains Cable

Use these instructions to check the insulation of the mains cable.

Procedure

1. Disconnect the mains cable from the terminals L1, L2, and L3 and from mains.
2. Measure the insulation resistance of the mains cable between phase conductors 1 and 2, between phase conductors 1 and 3, and between phase conductors 2 and 3.
3. Measure the insulation resistance between each phase conductor and the grounding conductor.
4. The insulation resistance must be >1 MΩ at the ambient temperature of 20 °C (68 °F).

8.5.2.3 Insulation Checks of the Motor

Use these instructions to check the insulation of the motor.

NOTICE

Obey the instructions of the motor manufacturer.

Procedure

1. Disconnect the motor cable from the motor.
2. Open the bridging connections in the motor connection box.
3. Measure the insulation resistance of each motor winding. The voltage must be the same or higher than the motor nominal voltage, but at least 1000 V.
4. The insulation resistance must be >1 MΩ at the ambient temperature of 20 °C (68 °F).
5. Connect the motor cables to the motor.
6. Do the final insulation check on the drive side. Put all phases together and measure to the ground.
7. Connect the motor cables to the drive.

9 Maintenance

9.1 Preventive Maintenance Recommendations

Generally, all technical equipment, including Danfoss AC Drives, need a minimum level of preventive maintenance. Regular maintenance is recommended to ensure trouble-free operation and long life of the drive. It is also recommended, as a good service practice, to record a maintenance log with counter values, date, and time describing the maintenance and service actions.

Danfoss recommends the following inspections and service intervals for liquid-cooled drive/system.

NOTE: The service schedule for part replacements can vary depending on operation conditions. Under specific conditions, the combination of stressful operating and environment conditions work together to significantly reduce the lifetime of the components. These conditions can include, for example, extreme temperature, dust, high humidity, hours of use, corrosive environment, and loading.

For operation in stressful conditions, Danfoss offers the DrivePro® Preventive Maintenance service. DrivePro® services extend the lifetime and increase the performance of the product with scheduled maintenance including customized part replacements. DrivePro® services are tailored to your application and operating conditions.

Table 43: Maintenance Schedule for Liquid-cooled Drives

Component	Inspection interval[1]	Service schedule[2]	Preventive maintenance actions
Installation			
Visual drive inspection	1 year	–	Check for the unusual, for example, for signs of overheating, aging, corrosion, and for dusty and damaged components.
Auxiliary equipment	1 year	According to manufacturer recommendations	Inspect equipment, switchgear, relays, disconnects, or fuses/circuit breakers. Examine the operation and condition for possible causes of operational faults or defects. The continuity check on fuses is performed by trained service personnel.
EMC consideration	1 year	–	Inspect the installation wiring regarding the electromagnetic capability and the separation distance between control wiring and power cables.
Cable routing	1 year	According to manufacturer recommendations	Check for parallel routing of motor cables, mains wiring, and signal wiring. Parallel routing must be avoided. Avoid routing cables through free air without support. Check for aging and wearing of the cable insulation.
Control wiring	1 year	–	Check for tightness, damaged or crimped wires or ribbon wires. The connections should be terminated correctly with solid crimped ends. The use of shielded cables and grounded EMC plate, or a twisted pair is recommended.
Proper clearances	1 year	–	Check that the required external clearances for proper airflow for cooling are followed according to the frame designation and drive type of the drive. For clearances, refer to the local design regulations.
Seals condition	1 year	–	Check that the seals of the enclosure, the covers, and the cabinet doors are in good condition.
Corrosive environments	1 year	–	Aggressive gases, such as sulphide, chloride, and salt mist can damage the electrical and mechanical components. Air filters do not remove airborne corrosive chemicals. Act based on findings.
Drive			
Programming	1 year	–	Check that the AC drive parameter settings are correct according to the motor, drive application, and I/O configuration. Only trained service personnel may perform this action.
Control panel	1 year	–	Check that the display pixels are intact. Check the event log for warnings, alarms, and faults. Repetitive events are a sign of potential issues. Contact your local service center.

Component	Inspection interval[1]	Service schedule[2]	Preventive maintenance actions
Drive cooling capacity	1 year	–	Check for blockages or constrictions in the air passages of the cooling channel. The channels must be free of dust and condensation.
Cleaning and filters	1 year	–	The interior of the enclosure must be cleaned annually, and more frequently if necessary. The level of dust in the filter, inside the enclosure, or in the internal fans between cabinets is an indicator for when the next cleaning or filter replacement is required.
Fans	1 year	5 years	Inspect the condition and operational status of all cooling fans. With the power off, the fan axis should feel tight, and spinning the fan with a finger, the rotation should be smooth and almost silent. When in RUN mode, fan vibration, excessive or strange noise is a sign of the bearings wearing, and the fan must be replaced.
Grounding	1 year	–	The drive system requires a dedicated ground wire connecting the drive, the output filter, and the motor to the building ground. Check that the ground connections are tight and free of paint or oxidation. Daisy-chain connections are not allowed. Braided straps are recommended if applicable.
PCB	1 year	10–12 years	Visually inspect the PCBs for signs of damage or degrading due to aging, corrosive environments, or environments with high temperatures. Only trained service personnel may perform the inspection and service action.
Power cables and wiring	1 year	According to manufacturer recommendations	Check for loose connections, aging, insulation condition, and proper torque to the drive connections. Check for proper rating of fuses and continuity check. Observe if there are any signs of operation in a demanding environment. For example, discoloration of the fuse housing can be a sign of condensation or high temperatures.
Vibration	1 year	–	Check for abnormal vibration or noise coming from the drive to ensure that the environment is stable for electronic components.
Insulator gaskets	1 year	10–15 years	Inspect the insulators for signs of degradation due to high temperature and aging. Replacement is based on findings. Only trained service personnel may perform this action.
Batteries	1 year	7–10 years	Replace the batteries according to manufacturer recommendations. Replace the RTC battery in the control unit every 7–10 years.
Spare Parts			
Spare parts	1 year	2 years	Stock spares in their original boxes in a dry and clean environment. Avoid hot storage areas.
Exchange units	1 year	2 years	Visually inspect for signs of damage, water, high humidity, corrosion, and dust within the visual field of view without disassembly. The exchange units with mounted electrolytic capacitors require reforming as stated in the service schedule. The reforming is performed by trained service personnel.
Coolant			
Log	Commissioning/ start-up, or at time of replacing liquid coolant	–	Record the water quality specification values to create a baseline for future reference before and after adding inhibitor and glycol. Also record the system pressure, coolant flow rate, temperature range, and create a baseline for future reference.
Glycols	1 year	Based on findings	Measure and record the level of glycol in the cooling system. The minimum concentration level is always 75/25% demineralized water/glycol.

Component	Inspection interval[1]	Service schedule[2]	Preventive maintenance actions
Corrosive inhibitors	1 year	Based on findings	Measure and record the level of Danfoss recommended corrosive inhibitor (Cortec-VpCI-649) in the liquid coolant (see specification). The level of inhibitor must be measured every year. If inhibitor is below the 1% recommended level, practice caution before adding more inhibitor to not exceed the level of electrical conductivity.
Pre-mixed glycol and inhibitor coolant	1 year	Based on findings	The pre-mixed coolants contain specific percentages of glycol and inhibitor for antifreeze and corrosion protection. The advantage of using a pre-mixed coolant is that the chemical composition is within Danfoss specifications, and there is no need for analyzing the coolant.
Demineralized water	1 year	Based on findings	Only use demineralized or deionized water in the coolant solution. Record and compare the chemical composition values when replacing or adding coolant.
Liquid Cooling System			
Pipes, hoses, and connections	1 year	1 year	Check for external signs of moisture, corrosion, and coolant leaks. Check the tightness of the cooling pipe connections. Check the heat sinks and host pipes in the cooling system.
Leak detector	1 year	10 years	Test the functioning of the leak detector.
Power unit heat sinks	1 year	6 years	Under normal conditions, the heat sinks must be cleaned or acid-washed every 6 years with Danfoss recommended cleaning products. Refill the coolant system and log the new coolant specification values.
Auxiliary equipment	1 year	According to manufacturer recommendations	Check that the sensors, gauges, and indicators are functioning correctly. Act based on findings.
System cooling capacity	1 year	Based on findings	Test the cooling capacity and the thermal transfer of the system. Record the coolant system flow, pressure, and input and output temperature, and compare to the previous measurements. Act based on findings.

[1] Defined as the time after the commissioning/start-up or the time from the previous inspection.

[2] Defined as the time after the commissioning/start-up or the time from the previous service schedule actions.

9.2 Maintenance of the Heat Exchanger

Maintenance instructions for Adwatec heat exchangers are available for download at Danfoss product materials – Adwatec.

10 Fault Tracing

10.1 Fault Types

When the control diagnostics of the AC drive find an unusual condition in the operation of the drive, the drive shows a notification about it. The notification can be seen on the display of the control panel. The display shows the code, the name, and a short description of the fault or alarm.

The source info tells the source of the fault, what caused it, where it occurred, and other data.

There are 3 different types of notification.

- An **info** does not affect the operation of the drive. The info must be reset.
- An **alarm** informs of unusual operation on the drive. It does not stop the drive. The alarm must be reset.
- A **fault** stops the drive. The drive must be reset and find a solution to the problem.

It is possible to program different responses for some faults in the application.

Reset the fault with the [BACK/RESET] button on the keypad, or through the I/O terminal, fieldbus, or PC tool. The faults stay in the Fault history where they can be examined. See the different fault codes in 10.2 Faults and Alarms.

Before contacting the distributor or the factory because of unusual operation, prepare some data. Write down all the texts on the display, the fault code, the fault ID, the source info, the *Active Faults* list, and the *Fault History*.

10.2 Faults and Alarms

10.2.1 Fault Code 1 - Overcurrent

10.2.1.1 Fault Code 1, ID 1 - Overcurrent (Hardware Fault)

Cause

There is too high a current ($> 4 \times I_H$) in the motor cable.

- a sudden heavy load increase
- a short circuit in the motor cables
- the motor is not the correct type
- the parameter settings are not properly made

Troubleshooting

- Check the loading.
- Check the motor.
- Check the cables and connections.
- Make an identification run.
- Set the acceleration time longer (P3.4.1.2 and P3.4.2.2).

10.2.1.2 Fault Code 1, ID 2 - Overcurrent (Software Fault)

Cause

If the current limit controller draws the output frequency down to zero and the current is still over the current limit, this fault is generated after 1 s.

Troubleshooting

- Check the loading.
- Check the motor.
- Check the cables and connections.
- Make an identification run.
- Set the acceleration time longer (P3.4.1.2 and P3.4.2.2).

10.2.1.3 Fault Code 1, ID 4 - Phase Overcurrent

Cause

The phase current is too high.

Troubleshooting

- Check the loading.
- Check the motor.
- Check the cables and connections.
- Make an identification run.
- Set the acceleration time longer (P3.4.1.2 and P3.4.2.2).

10.2.2 Fault Code 2 - Overvoltage

10.2.2.1 Fault Code 2, ID 10 - Overvoltage (Hardware Fault)

Cause

The DC link voltage is higher than the limits.

- too short a deceleration time
- high overvoltage spikes in the supply

Troubleshooting

- Set the deceleration time longer (P3.4.1.3 and P3.4.2.3).
- Use a brake chopper. It is available as an option.
- Activate the overvoltage controller.
- Check the input voltage.

10.2.2.2 Fault Code 2, ID 11 - Overvoltage (Software Fault)

Cause

The DC link voltage is higher than the limits.

- too short a deceleration time
- high overvoltage spikes in the supply

Troubleshooting

- Set the deceleration time longer (P3.4.1.3 and P3.4.2.3).
- Use a brake chopper. It is available as an option.
- Activate the overvoltage controller.
- Check the input voltage.

10.2.2.3 Fault Code 2, ID 13 - DC+ Overvoltage

Cause

The positive DC-link voltage is higher than the limits.

- too short a deceleration time
- high overvoltage spikes in the supply

Troubleshooting

- Set the deceleration time longer (P3.4.1.3 and P3.4.2.3).
- Use a brake chopper. It is available as an option.
- Activate the overvoltage controller.
- Check the input voltage.

10.2.2.4 Fault Code 2, ID 14 - DC- Overvoltage

Cause

The negative DC-link voltage is higher than the limits.

- too short a deceleration time
- high overvoltage spikes in the supply

Troubleshooting

- Set the deceleration time longer (P3.4.1.3 and P3.4.2.3).
- Use a brake chopper. It is available as an option.
- Activate the overvoltage controller.
- Check the input voltage.

10.2.2.5 Fault Code 2, ID 16 - DC-Link Overvoltage

Cause

The DC-link voltage is too high for the motor.

Troubleshooting

- Set the deceleration time longer (P3.4.1.3 and P3.4.2.3).
- Use a brake chopper. It is available as an option.
- Activate the overvoltage controller.
- Check the input voltage.

10.2.3 Fault Code 3 - Earth Fault

10.2.3.1 Fault Code 3, ID 20 - Earth Fault (Hardware Fault)

Cause

The ground current sensor has detected a too high current flowing to the ground or the current measurement has detected that the sum of output phase currents is not zero (0 A).

- an insulation malfunction in the cables or the motor
- a filter (dU/dt, sine) malfunction

Troubleshooting

- Check the motor cables and the motor.
- Check the filters.

10.2.3.2 Fault Code 3, ID 21 - Earth fault (Software Fault)

Cause

The ground current sensor has detected a too high current flowing to the ground or the current measurement has detected that the sum of output phase currents is not zero (0 A).

- an insulation malfunction in the cables or the motor
- a filter (dU/dt, sine) malfunction

Troubleshooting

- Check the motor cables and the motor.
- Check the filters.

10.2.3.3 Fault Code 3, ID 22 - Ground Fault

Cause

The DC link neutral to ground voltage is higher than the fault level.

Troubleshooting

- Check the motor cables and the motor.
- Check the filters.

10.2.4 Fault Code 5 - Charging Switch

10.2.4.1 Fault Code 5, ID 40 - Charging Switch

Cause

The charging switch is closed and the feedback information is OPEN.

The fault is hardware triggered. The feedback signal is compared to the control signal.

- operation malfunction
- defective component

Troubleshooting

- Reset the fault and restart the drive.
- Check the feedback signal and the cable connection between the control unit and the power unit.
- If the fault occurs again, ask for instructions from your nearest distributor.

10.2.5 Fault Code 7 - Saturation

10.2.5.1 Fault Code 7, ID 60 - Saturation

Cause

The fault is hardware triggered. The fault is detected by measuring the collector to emitter voltage on the IGBT module. Excessive voltage when the IGBT is on indicates excess current flow.

- Defective IGBT.
- An IGBT does not execute its operation.
- De-saturation short circuit in the IGBT.
- A short circuit or an overload in the brake resistor.
- Noise issues can cause saturation faults.
- Extreme temperatures can cause saturation faults

Troubleshooting

- Check the source information for the fault. It indicates which module to check.
- This fault cannot be reset from the control panel.
- Switch off the power.
- After switching off the power from the drive, including the control supply, switch on the control supply and try to reset the fault.
  - If the fault cannot be reset, there is probably an issue on a circuit board inside the phase module. The entire phase module must be replaced.
- If the fault is on an INU module, check the motor cables and the motor for short circuits with a Megger tester.
- **Do not connect the main power to the phase modules until all the tests are done to the modules!**
- Ask for instructions from the factory.

10.2.6 Fault Code 8 - System Fault

10.2.6.1 Fault Code 8, ID 600 - System Fault

Cause

- Communication between the control unit and power unit has failed when the drive is in RUN state.
- Component failure.
- Faulty operation.

Troubleshooting

- Reset the fault and restart the drive.
- Check the fiber optic connections between the control unit and phase modules.
- Download the latest software from the Danfoss Drives website. Update the drive with it.
- If the fault occurs again, ask for instructions from your nearest distributor.

10.2.6.2 Fault Code 8, ID 601 - System Fault

Cause

- There is no communication between the control board and the power.
- Failure in communication between the control unit and power unit when the control updated the initial values to the power unit.
- Component failure.
- Faulty operation.

Troubleshooting

- Reset the fault and restart the drive.
- Check the fiber optic connections between the control unit and phase modules.
- Download the latest software from the Danfoss Drives website. Update the drive with it.
- If the fault occurs again, ask for instructions from your nearest distributor.

10.2.6.3 Fault Code 8, ID 602 - System Fault

Cause

- The watchdog has reset the CPU.
- Defective component.
- Operation malfunction.

Troubleshooting

- Reset the fault and restart the drive.
- Download the latest software from the Danfoss Drives website. Update the drive with it.
- If the fault occurs again, ask for instructions from your nearest distributor.

10.2.6.4 Fault Code 8, ID 603 - System Fault

Cause

The fault is hardware triggered.

- Defective component.
- Operation malfunction.
- The voltage of auxiliary power in the power unit is too low.

Troubleshooting

- Reset the fault and restart the drive.
- Download the latest software from the Danfoss Drives website. Update the drive with it.
- If the fault occurs again, ask for instructions from your nearest distributor.

10.2.6.5 Fault Code 8, ID 604 - System Fault

Cause

The fault is hardware triggered.

- Phase fault.
- Defective component.
- Operation malfunction.
- Output phase voltage does not agree to the reference.
- Feedback fault.

Troubleshooting

- Reset the fault and restart the drive.
- Download the latest software from the Danfoss Drives website. Update the drive with it.
- If the fault occurs again, ask for instructions from your nearest distributor.

10.2.6.6 Fault Code 8, ID 605 - System Fault

Cause

Unknown fault in the power unit.

- Defective component.
- Operation malfunction.

Troubleshooting

- Reset the fault and restart the drive.
- Download the latest software from the Danfoss Drives website. Update the drive with it.
- If the fault occurs again, ask for instructions from your nearest distributor.

10.2.6.7 Fault Code 8, ID 606 - System Fault

Cause

- The software of the control unit is not compatible with the software of the power unit.

Troubleshooting

- Reset the fault and restart the drive.
- Download the latest software from the Danfoss Drives website. Update the drive with it.
- If the fault occurs again, ask for instructions from your nearest distributor.

10.2.6.8 Fault Code 8, ID 607 - System Fault

Cause

- The software version cannot be read. There is no software in the power unit.
- Defective component.
- Operation malfunction.

Troubleshooting

- Reset the fault and restart the drive.
- Download the latest software from the Danfoss Drives website. Update the drive with it.
- If the fault occurs again, ask for instructions from your nearest distributor.

10.2.6.9 Fault Code 8, ID 608 - System Fault

Cause

- A CPU overload. Software or application causes the overload.
- Too heavy application.
- Faulty operation.

Troubleshooting

- Reset the fault and restart the drive.
- Download the latest software from the Danfoss Drives website. Update the drive with it.
- If the fault occurs again, ask for instructions from your nearest distributor.

10.2.6.10 Fault Code 8, ID 609 - System Fault

Cause

- Access to the memory has failed.
- SPI EEPROM failure. Cannot be restored.
- Defective component.
- Operation malfunction.

Troubleshooting

- Reset the fault and make a power down of the drive twice.
- Download the latest software from the Danfoss Drives website. Update the drive with it.

10.2.6.11 Fault Code 8, ID 610 - System Fault

Cause

- Device Properties is not readable.
- Unreadable memory on the control board.
- Defective component.
- Operation malfunction.

Troubleshooting

- Reset the fault and restart.
- Download the latest software from the Danfoss Drives website. Update the drive with it.
- If the fault occurs again, ask for instructions from your nearest distributor.

10.2.6.12 Fault Code 8, ID 614 - System Fault

Cause

- Configuration error.
- Software error.
- Defective component (a defective control board).
- Operation malfunction.

Troubleshooting

- Reset the fault and restart.
- Download the latest software from the Danfoss Drives website. Update the drive with it.
- If the fault occurs again, ask for instructions from your nearest distributor.

10.2.6.13 Fault Code 8, ID 615 - System Fault

Cause

- Powerbus high-speed process data failure.
- Error in the communication between two power units.

Troubleshooting

- Reset the fault and restart.
- Download the latest software from the Danfoss Drives website. Update the drive with it.
- If the fault occurs again, ask instructions from your nearest distributor.

10.2.6.14 Fault Code 8, ID 616 - System Fault

Cause

- Powerbus high-speed socket communication failure.
- Error in the communication between two power units.

Troubleshooting

- Reset the fault and restart.
- Download the latest software from the Danfoss Drives website. Update the drive with it.
- If the fault occurs again, ask instructions from your nearest distributor.

10.2.6.15 Fault Code 8, ID 618 - System Fault

Cause

- Powerbus high-speed link error.
- Error in the communication between two power units.

Troubleshooting

- Reset the fault and restart.
- Download the latest software from the Danfoss Drives website. Update the drive with it.
- If the fault occurs again, ask instructions from your nearest distributor.

10.2.6.16 Fault Code 8, ID 620 - System Fault

Cause

- Gate driver board error A.

Troubleshooting

- Reset the fault and restart.
- Download the latest software from the Danfoss Drives website. Update the drive with it.
- If the fault occurs again, ask instructions from your nearest distributor.

10.2.6.17 Fault Code 8, ID 621 - System Fault

Cause

- Gate driver board error B.

Troubleshooting

- Reset the fault and restart.
- Download the latest software from the Danfoss Drives website. Update the drive with it.
- If the fault occurs again, ask instructions from your nearest distributor.

10.2.6.18 Fault Code 8, ID 622 - System Fault

Cause

- The connection between the gate driver board and the measurement board is broken.

Troubleshooting

- Reset the fault and restart.
- Download the latest software from the Danfoss Drives website. Update the drive with it.
- If the fault occurs again, ask instructions from your nearest distributor.

10.2.6.19 Fault Code 8, ID 623 - System Fault

Cause

- The negative voltage of the 24 V supply is below the limit.

Troubleshooting

- Reset the fault and restart.
- Download the latest software from the Danfoss Drives website. Update the drive with it.
- If the fault occurs again, ask instructions from your nearest distributor.

10.2.6.20 Fault Code 8, ID 624 - System Fault

Cause

- The positive voltage of the 24 V supply is below the limit.

Troubleshooting

- Check the 24 V power supply.

10.2.6.21 Fault Code 8, ID 625 - System Fault

Cause

- The positive voltage of the 24 V supply is below the limit in a follower unit.

Troubleshooting

- Check the 24 V power supply.

10.2.6.22 Fault Code 8, ID 647 - System Fault

Cause

- Cannot start the software/application, or software/application error.
- Defective component.
- Operation malfunction.

Troubleshooting

- Reset the fault and restart.
- Download the latest software from the Danfoss Drives website. Update the drive with it.
- If the fault occurs again, ask for instructions from your nearest distributor.

10.2.6.23 Fault Code 8, ID 648 - System Fault

Cause

- Invalid function block used in the application.
- Operation malfunction.
- The system software is not compatible with the application.

Troubleshooting

- Reset the fault and restart.
- Download the latest software from the Danfoss Drives website. Update the drive with it.
- If the fault occurs again, ask for instructions from your nearest distributor.

10.2.6.24 Fault Code 8, ID 649 - System Fault

Check the Source 1, Source 2, and Source 3 information of the fault.

Source 1 = Control; Source 2 = 12; Source 3 = 0

Cause

- A resource overload.
- Component failure.
- Faulty operation.
- Internal resources of the software have run out.

Troubleshooting

- Reset the fault and restart.
- Download the latest software from the Danfoss Drives website. Update the drive with it.
- If the fault occurs again, ask instructions from your nearest distributor.

Source 1 = Control; Source 2 = 12; Source 3 = 1000

Cause

- Parameter initial value loading error.
- Parameter problem.

Troubleshooting

- Load factory default settings.
- Update the latest software.

Source 1 = Control; Source 2 = 12; Source 3 = 2000

Cause

- Parameter initial value loading error.
- Parameter restoring error.

Troubleshooting

- Load factory default settings.
- Reset the fault and restart.
- Download the latest software from the Danfoss Drives website. Update the drive with it.
- If the fault occurs again, ask instructions from your nearest distributor.

Source 1 = Control; Source 2 = 12; Source 3 = 3001–3007, 10000–15000

Cause

- Parameter saving error.
- Parameter restoring error.

Troubleshooting

- Load factory default settings.
- Reset the fault and restart.
- Download the latest software from the Danfoss Drives website. Update the drive with it.
- If the fault occurs again, ask instructions from your nearest distributor.

Source 1 = Control; Source 2 = Number (module); Source 3 = Number (depends on module)

Cause

- A resource overload.
- Internal resources of the software have run out.

Troubleshooting

- Reset the fault and restart.
- Download the latest software from the Danfoss Drives website. Update the drive with it.
- If the fault occurs again, ask instructions from your nearest distributor.

Source 1 = Control; Source 2 = Motor control; Source 3 =

Cause

- A resource overload.
- More than 10% of the motor control cycles consume more time than budgeted during a 10 s supervision period.
- Internal software resources have run out.

Troubleshooting

- Reset the fault and restart.
- Download the latest software from the Danfoss Drives website. Update the drive with it.
- If the fault occurs again, ask instructions from your nearest distributor.

10.2.6.25 Fault Code 8, ID 667 - System Fault

Cause

- Ethernet configuration problem.
- Problem on the physical interface transceiver.
- Ethernet PHY is not recognized or it is in the wrong state.

Troubleshooting

- Reset the fault and restart the AC drive.
- Download the newest software from the Danfoss Drives website. Update the drive with it.
- If the fault occurs again, ask for instructions from your nearest distributor.

10.2.6.26 Fault Code 8, ID 670 - System Fault

Cause

- The current of the 24 V auxiliary output is higher than the maximum limit (>250 mA).

Troubleshooting

- Check the loading of the auxiliary output.
- Reset the fault and restart the AC drive.
- Download the newest software from the Danfoss Drives website. Update the drive with it.
- If the fault occurs again, ask for instructions from your nearest distributor.

10.2.6.27 Fault Code 8, ID 681 - System Fault

Cause

- The maximum amount of datatables has been reserved.

Troubleshooting

- Reset faults and alarms that are waiting to be reset. Active faults cannot be reset.
- Return to previous working software version.
- If the fault occurs again, ask instructions from your nearest service center or distributor.

10.2.6.28 Fault Code 8, ID 827 - System Fault

Cause

- Invalid/incorrect license key provided (via keypad or VCX).
- The license key check fails, either by hash not matching with the drive, or a crc-check failure.
- The license key is incorrect or not for this drive.

Troubleshooting

- Reset the fault and restart the AC drive.
- Make sure that the license key is correct and enter the license key to the AC drive again.
- Download the newest software from the Danfoss Drives website. Update the drive with it.
- If the fault occurs again, ask for instructions from your nearest distributor.

10.2.6.29 Fault Code 8, ID 828 - System Fault

Cause

- The entered license key was accepted and stored to the drive.

Troubleshooting

- No actions required. Notification only.

10.2.6.30 Fault Code 8, ID 829 - System Fault

Cause

- A license vcx-file has been loaded to the drive.
- New licenses have been taken into use since the previous start-up.

Troubleshooting

- No actions required. Notification only.

10.2.6.31 Fault Code 8, ID 830 - System Fault

Cause

- Licenses have been removed from the drive.

Troubleshooting

- No actions required. Notification only.

10.2.7 Fault Code 9 - Undervoltage

10.2.7.1 Fault Code 9, ID 80 - Undervoltage (Fault)

Cause

The DC link voltage is lower than the limits.

- too low a supply voltage
- defective component
- a defective input fuse
- the external charge switch is not closed

NOTE! This fault becomes active only if the drive is in Run state.

Troubleshooting

- If there is a temporary supply voltage break, reset the fault and restart the drive.
- Do a check of the supply voltage. If the supply voltage is sufficient, there is an internal fault.
- Examine the electrical network for fault.
- Ask for instructions from your nearest distributor.

10.2.8 Fault Code 10 - Input Phase

10.2.8.1 Fault Code 10, ID 91 - Input Phase

Cause

- supply voltage malfunction
- a defective fuse or malfunction in the supply cables

The load must be a minimum of 10–20% for the supervision to work.

Troubleshooting

- Check the supply voltage.
- Check the fuses.
- Check the supply cable.
- Check the rectifying bridge.

10.2.8.2 Fault Code 10, ID 92 - Input Phase

Cause

- Software-based input phase supervision.
- Bridge 0 input phase is detected missing based on phase voltage measurements.

Troubleshooting

- Check the supply voltage.
- Check the fuses.
- Check the supply cable.

10.2.8.3 Fault Code 10, ID 93 - Input Phase

Cause

- Software based input phase supervision
- Bridge 1 input phase is detected missing based on phase voltage measurements.

Troubleshooting

- Check the supply voltage.
- Check the fuses.
- Check the supply cable.

10.2.8.4 Fault Code 10, ID 94 - Input Phase

Cause

- Software-based input phase supervision.
- An input phase is detected missing based on phase voltage measurements.

Troubleshooting

- Check the supply voltage.
- Check the fuses.
- Check the supply cable.
- Check the rectifying bridge.

10.2.8.5 Fault Code 10, ID 95 - Input Phase

Cause

- Software based input phase supervision.
- Bridge 2 input phase is detected missing based on phase voltage measurements.

Troubleshooting

- Check the supply voltage.
- Check the fuses.
- Check the supply cable.

10.2.8.6 Fault Code 10, ID 96 - Input Phase

Cause

- Software based input phase supervision
- Bridge 3 input phase is detected missing based on phase voltage measurements.

Troubleshooting

- Check the supply voltage.
- Check the fuses.
- Check the supply cable.

10.2.8.7 Fault Code 10, ID 192 - Input Phase (Alarm)

Cause

- Software based input phase supervision
- Bridge 0 input phase is detected missing based on phase voltage measurements.

Troubleshooting

- Check the supply voltage.
- Check the fuses.
- Check the supply cable.

10.2.8.8 Fault Code 10, ID 193 - Input Phase (Alarm)

Cause

- Software based input phase supervision
- Bridge 1 input phase is detected missing based on phase voltage measurements.

Troubleshooting

- Check the supply voltage.
- Check the fuses.
- Check the supply cable.

10.2.8.9 Fault Code 10, ID 195 - Input Phase (Alarm)

Cause

- Software based input phase supervision
- Bridge 2 input phase is detected missing based on phase voltage measurements.

Troubleshooting

- Check the supply voltage.
- Check the fuses.
- Check the supply cable.

10.2.8.10 Fault Code 10, ID 196 - Input Phase (Alarm)

Cause

- Software based input phase supervision
- Bridge 3 input phase is detected missing based on phase voltage measurements.

Troubleshooting

- Check the supply voltage.
- Check the fuses.
- Check the supply cable.

10.2.9 Fault Code 11 - Output Phase Supervision

10.2.9.1 Fault Code 11, ID 100 - Output Phase Supervision

Cause

The current measurement tells that there is no current in 1 motor phase.

- A motor or motor cables malfunction.
- Filter (dU/dt, sine wave) malfunction.

Troubleshooting

- Check the motor cable and the motor.
- Check the dU/dt or sine wave filter.

10.2.9.2 Fault Code 11, ID 101 - Output Phase Supervision

Cause

- Output phase current di/dt is above the threshold level.

Troubleshooting

- Check the motor cable and the motor.

10.2.10 Fault Code 12 - Brake Chopper Supervision

10.2.10.1 Fault Code 12, ID 110 - Brake Chopper Supervision (Hardware Fault)

Cause

- The fault is hardware triggered.
- There is no brake resistor.
- The brake resistor is broken.
- A defective brake chopper.

Troubleshooting

- Check the brake resistor and the cabling. If they are in good condition, there is a fault in the resistor or the brake chopper. Ask instructions from your nearest distributor.

10.2.10.2 Fault Code 12, ID 111 - Brake Chopper Saturation Alarm

Cause

- The fault is hardware triggered.
- There is no brake resistor.
- The brake resistor is broken.
- A defective brake chopper.

Troubleshooting

- Check the brake resistor and the cabling. If they are in good condition, there is a fault in the resistor or the brake chopper. Ask instructions from your nearest distributor.

10.2.11 Fault Code 13 - AC Drive Undertemperature

10.2.11.1 Fault Code 13, ID 120 - AC Drive Undertemperature (Fault)

Cause

- Too low a temperature in the heat sink of the power unit or in the power board.

Troubleshooting

- The ambient temperature is too low for the drive. Move the drive in a warmer position.

10.2.11.2 Fault Code 13, ID 121 - AC Drive Undertemperature (Alarm)

Cause

- Too low a temperature in the heat sink of the power unit or in the power board.

Troubleshooting

- The ambient temperature is too low for the drive. Move the drive in a warmer position.

10.2.12 Fault Code 14 - AC Drive Overtemperature

10.2.12.1 Fault Code 14, ID 130 - AC Drive Overtemperature (Fault, Heat Sink)

Cause

- Too high a temperature in the heat sink of the power unit or in the power board.

Troubleshooting

- Check the actual amount and flow of cooling air.
- Examine the heat sink for dust.
- Check the ambient temperature.
- Make sure that the switching frequency is not too high in relation to the ambient temperature and the motor load.
- Check the cooling fan.

10.2.12.2 Fault Code 14, ID 131 - AC Drive Overtemperature (Alarm, Heat Sink)

Cause

- Too high a temperature in the heat sink of the power unit or in the power board.

Troubleshooting

- Check the actual amount and flow of cooling air.
- Examine the heat sink for dust.
- Check the ambient temperature.
- Make sure that the switching frequency is not too high in relation to the ambient temperature and the motor load.
- Check the cooling fan.

10.2.12.3 Fault Code 14, ID 132 - AC Drive Overtemperature (Fault, Board)

Cause

- Too high a temperature in the heat sink of the power unit or in the power board.

Troubleshooting

- Check the actual amount and flow of cooling air.
- Examine the heat sink for dust.
- Check the ambient temperature.
- Make sure that the switching frequency is not too high in relation to the ambient temperature and the motor load.
- Check the cooling fan.

10.2.12.4 Fault Code 14, ID 133 - AC Drive Overtemperature (Alarm, Board)

Cause

- Too high a temperature in the heat sink of the power unit or in the power board.

Troubleshooting

- Check the actual amount and flow of cooling air.
- Examine the heat sink for dust.
- Check the ambient temperature.
- Make sure that the switching frequency is not too high in relation to the ambient temperature and the motor load.
- Check the cooling fan.

10.2.12.5 Fault Code 14, ID 134 - AC Drive Overtemperature (Fault)

Cause

- Power unit auxiliary temperature is too high.

Troubleshooting

- Check the actual amount and flow of cooling air.
- Examine the heat sink for dust.
- Check the ambient temperature.
- Make sure that the switching frequency is not too high in relation to the ambient temperature and the motor load.
- Check the cooling fan.

10.2.12.6 Fault Code 14, ID 136 - Overvoltage Protection Circuit Temperature (Alarm)

Cause

- An internal circuit overtemperature caused by a ground fault in the output.
- Too high an output capacitance or a ground fault in the floating network.

Troubleshooting

- Check the cables and the motor.

10.2.12.7 Fault Code 14, ID 137 - Overvoltage Protection Circuit Temperature (Fault)

Cause

- Too high an output capacitance or a ground fault in the floating network.

Troubleshooting

- Check the cables and the motor.

10.2.12.8 Fault Code 14, ID 138 - AC Drive Overtemperature (Fault)

Cause

- Output filter temperature is too high.

Troubleshooting

- Check the motor cables and the motor.
- Check the correct amount and flow of cooling air.
- Check the ambient temperature.

10.2.12.9 Fault Code 14, ID 139 - AC Drive Overtemperature (Fault)

Cause

- Brake chopper temperature is too high.

Troubleshooting

- Check the correct amount and flow of cooling air.
- Check the heat sink of the brake chopper for dust.
- Check the ambient temperature.

10.2.13 Fault Code 15 - Motor Stall

10.2.13.1 Fault Code 15, ID 140 - Motor Stall

Cause

- The motor stalled.
- Motor stall protection has tripped. The motor is stuck for some reason.

Troubleshooting

- Check the motor and the load.
- Check the parameters.

10.2.14 Fault Code 16 - Motor Overtemperature

10.2.14.1 Fault Code 16, ID 150 - Motor Overtemperature

Cause

- Motor over heating has been detected by the AC drive motor temperature model.
- There is too heavy a load on the motor.

Troubleshooting

- Decrease the motor load. If there is no motor overload, check the motor thermal protection parameters (parameter group 3.8 Protections).
- Check the motor.

10.2.15 Fault Code 17 - Motor Underload

10.2.15.1 Fault Code 17, ID 160 - Motor Underload

Cause

- There is not a sufficient load on the motor.

Troubleshooting

- Check the load.
- Check the parameters.
- Check the dU/dt and sine wave filters.

10.2.16 Fault Code 19 - Power Overload

10.2.16.1 Fault Code 19, ID 180 - Power Overload (Short-time Supervision)

Cause

- The motor overload protection has tripped.
- The power of the drive is too high.

Troubleshooting

- Decrease the load.
- Examine the dimensions of drive. Examine if it is too small for the load.

10.2.16.2 Fault Code 19, ID 181 - Power Overload (Long-time Supervision)

Cause

- The motor overload protection has tripped.
- The power of the drive is too high.

Troubleshooting

- Decrease the load.
- Examine the dimensions of drive. Examine if it is too small for the load.

10.2.17 Fault Code 25 - Motor Control Fault

10.2.17.1 Fault Code 25, ID 240 - Motor Control Fault

Cause

This fault is available only if you use a customer-specific application. A malfunction in the start angle identification.

- The rotor moves during identification.
- The new angle does not agree with the old value.

Troubleshooting

- Reset the fault and restart the drive.
- Increase the identification current.
- See the fault history source for more information.

10.2.17.2 Fault Code 25, ID 241 - Motor Control Fault

Cause

This fault is available only if you use a customer-specific application. A malfunction in the start angle identification.

- The rotor moves during identification.
- The new angle does not agree with the old value.

Troubleshooting

- Reset the fault and restart the drive.
- Increase the identification current.
- See the fault history source for more information.

10.2.18 Fault Code 26 - Start-up Prevented

10.2.18.1 Fault Code 26, ID 250 - Start-up Prevented

Cause

- It is not possible to do a start-up of the drive. When the Run request is ON, a new software (a firmware or an application), a parameter setting, or other file that affects the operation of the drive, is loaded to drive.

Troubleshooting

- Proceed with caution! Acknowledge the prevention of unexpected start-up by removing the Run request.
- Reset the fault and stop the drive.
- Load the software and start the drive.

10.2.19 Fault Code 29 - ATEX Thermistor

10.2.19.1 Fault Code 29, ID 280 - ATEX Thermistor

Cause

- The ATEX thermistor tells that there is an overtemperature.

Troubleshooting

- Reset the fault. Check the thermistor and its connections.

10.2.20 Fault Code 30 - Safety

10.2.20.1 Fault Code 30, ID 290 - Safe Off

Cause

- The safe Off signal A does not let you set the drive to the READY state.

Troubleshooting

- Reset the fault and restart the drive.
- Check the signals from the control board to the power unit and the D connector.

10.2.20.2 Fault Code 30, ID 291 - Safe Off

Cause

- The safe Off signal B does not let you set the drive to the READY state.

Troubleshooting

- Reset the fault and restart the drive.
- Check the signals from the control board to the power unit and the D connector.

10.2.20.3 Fault Code 30, ID 500 - Safety Configuration

Cause

- The safety configuration switch was installed.

Troubleshooting

- Remove the safety configuration switch from the control board.

10.2.20.4 Fault Code 30, ID 501 - Safety Configuration

Cause

- There are too many STO option boards. It is possible to have only 1.

Troubleshooting

- Keep 1 of the STO option boards. Remove the others. See the safety manual.

10.2.20.5 Fault Code 30, ID 502 - Safety Configuration

Cause

- The STO option board was installed in an incorrect slot.

Troubleshooting

- Put the STO option board into the correct slot. See the OPTBJ STO Safety manual.

10.2.20.6 Fault Code 30, ID 503 - Safety configuration

Cause

- There is no safety configuration switch on the control board.

Troubleshooting

- Install the safety configuration switch on the control board. See the safety manual.

10.2.20.7 Fault Code 30, ID 504 - Safety configuration

Cause

- The safety configuration switch was installed incorrectly on the control board.

Troubleshooting

- Install the safety configuration switch into the correct position on the control board. See the safety manual.

10.2.20.8 Fault Code 30, ID 505 - Safety configuration

Cause

- The safety configuration switch was installed incorrectly on the STO option board.

Troubleshooting

- Check the installation of the safety configuration switch on the STO option board. See the safety manual.

10.2.20.9 Fault Code 30, ID 506 - Safety configuration

Cause

- There is no communication with the STO option board.
- Communication has failed between the control board and STO option board.

Troubleshooting

- Check the installation of the STO option board. See the safety manual.

10.2.20.10 Fault Code 30, ID 507 - Safety configuration

Cause

- The STO option board is not compatible with the hardware.

Troubleshooting

- Reset the drive and restart it. If the fault occurs again, ask for instructions from your nearest distributor.

10.2.20.11 Fault Code 30, ID 520 - Safety diagnostics

Cause

- The STO inputs have a different status.

Troubleshooting

- Check the external safety switch. Check the input connection and cable of the safety switch.
- Reset the drive and restart.
- If the fault occurs again, ask for instructions from your nearest distributor.

10.2.20.12 Fault Code 30, ID 521 - Safety diagnostics

Cause

- A malfunction in the ATEX thermistor diagnostic. There is no connection in the ATEX thermistor input.

Troubleshooting

- Reset the drive and restart.
- If the fault occurs again, change the option board.

10.2.20.13 Fault Code 30, ID 522 - Safety diagnostics

Cause

- A short circuit in the connection of the ATEX thermistor input.

Troubleshooting

- Check the ATEX thermistor input connection.
- Check the external ATEX connection.
- Check the external ATEX thermistor.

10.2.20.14 Fault Code 30, ID 523 - Safety diagnostics

Cause

- A problem occurred in the internal safety circuit.

Troubleshooting

- Check the test pulses from the safety lines.
- Reset the drive and restart.
- If the fault occurs again, ask for instructions from your nearest distributor.

10.2.20.15 Fault Code 30, ID 524 - Safety diagnostics

Cause

- An overvoltage in the safety option board.

Troubleshooting

- Reset the drive and restart.
- If the fault occurs again, ask for instructions from your nearest distributor.

10.2.20.16 Fault Code 30, ID 525 - Safety Diagnostics

Cause

- An undervoltage in the safety option board.

Troubleshooting

- Reset the drive and restart.
- If the fault occurs again, ask for instructions from your nearest distributor.

10.2.20.17 Fault Code 30, ID 526 - Safety Diagnostics

Cause

- An internal malfunction in the safety option board CPU or in the memory handling.

Troubleshooting

- Reset the drive and restart.
- If the fault occurs again, ask for instructions from your nearest distributor.

10.2.20.18 Fault Code 30, ID 527 - Safety Diagnostics

Cause

- An internal malfunction in the safety function.
- More than one STO board installed.
- Communication to the STO board does not work.
- Old hardware does not support the STO board.

Troubleshooting

- Check that the STO board is installed correctly.
- Reset the drive and restart.
- If the fault occurs again, ask for instructions from your nearest distributor.

10.2.20.19 Fault Code 30, ID 530 - Safe Torque Off

Cause

- An emergency stop was connected or some other STO operation was activated.

Troubleshooting

- When the STO function is activated, the drive is in safe state.

10.2.21 Fault Code 32 - Fan Cooling

10.2.21.1 Fault Code 32, ID 311 - Fan Cooling

Cause

- The fan speed does not agree to the speed reference accurately, but the drive operates correctly.

Troubleshooting

- Reset the fault and restart the drive.
- Clean or replace the fan.

10.2.21.2 Fault Code 32, ID 312 - Fan Cooling

Cause

- The fan life time (that is, 50 000 h) is complete.

Troubleshooting

- Replace the fan and reset the life time counter of the fan.

10.2.22 Fault Code 33 - Fire Mode Enabled

10.2.22.1 Fault Code 33, ID 320 - Fire Mode Enabled

Cause

- The fire mode of the drive is enabled. The protections of the drive are disabled or autoreset.

Troubleshooting

- Check the parameter settings and the signals.
- This alarm is reset automatically when fire mode is disabled.

10.2.23 Fault Code 37 - Device Changed (Same Type)

10.2.23.1 Fault Code 37, ID 361 - Device Changed (Same Type)

Cause

- The power unit was replaced by a new one that has the same size. The device is ready to be used. The parameters are available in the drive.

Troubleshooting

- Reset the fault. The drive reboots after you reset the fault.

10.2.23.2 Fault Code 37, ID 362 - Device Changed (Same Type)

Cause

- The option board in slot B was replaced by a new one that you have used before in the same slot. The device is ready to be used.

Troubleshooting

- Reset the fault. The drive starts to use the old parameter settings.

10.2.23.3 Fault Code 37, ID 363 - Device Changed (Same Type)

Cause

- The option board in slot C was replaced by a new one that you have used before in the same slot. The device is ready to be used.

Troubleshooting

- Reset the fault. The drive starts to use the old parameter settings.

10.2.23.4 Fault Code 37, ID 364 - Device Changed (Same Type)

Cause

- The option board in slot D was replaced by a new one that you have used before in the same slot. The device is ready to be used.

Troubleshooting

- Reset the fault. The drive starts to use the old parameter settings.

10.2.23.5 Fault Code 37, ID 365 - Device Changed (Same Type)

Cause

- The option board in slot E was replaced by a new one that you have used before in the same slot. The device is ready to be used.

Troubleshooting

- Reset the fault. The drive starts to use the old parameter settings.

10.2.24 Fault Code 38 - Device Added (Same Type)

10.2.24.1 Fault Code 38, ID 372 - Device Added (Same Type)

Cause

- An option board was put into slot B. You have used the option board before in the same slot.

Troubleshooting

- The device is ready for use. The drive starts to use the old parameter settings.

10.2.24.2 Fault Code 38, ID 373 - Device Added (Same Type)

Cause

- An option board was put into slot C. You have used the option board before in the same slot.

Troubleshooting

- The device is ready for use. The drive starts to use the old parameter settings.

10.2.24.3 Fault Code 38, ID 374 - Device Added (Same Type)

Cause

- An option board was put into slot D. You have used the option board before in the same slot.

Troubleshooting

- The device is ready for use. The drive starts to use the old parameter settings.

10.2.24.4 Fault Code 38, ID 375 - Device Added (Same Type)

Cause

- An option board was put into slot E. You have used the option board before in the same slot.

Troubleshooting

- The device is ready for use. The drive starts to use the old parameter settings.

10.2.25 Fault Code 39 - Device Removed

10.2.25.1 Fault Code 39, ID 382 - Device Removed

Cause

- An option board was removed from slot A or B.

Troubleshooting

- The device is not available. Reset the fault.

10.2.25.2 Fault Code 39, ID 383 - Device Removed

Cause

- An option board was removed from slot C.

Troubleshooting

- The device is not available. Reset the fault.

10.2.25.3 Fault Code 39, ID 384 - Device Removed

Cause

- An option board was removed from slot D.

Troubleshooting

- The device is not available. Reset the fault.

10.2.25.4 Fault Code 39, ID 385 - Device Removed

Cause

- An option board was removed from slot E.

Troubleshooting

- The device is not available. Reset the fault.

10.2.26 Fault Code 40 - Device Unknown

10.2.26.1 Fault Code 40, ID 390 - Device Unknown

Cause

- An unknown device was connected (the power unit/option board).
- The device can be unknown because of, for example, missing configuration values.

Troubleshooting

- The device is not available. If the fault occurs again, ask for instructions from your nearest distributor.

10.2.27 Fault Code 41 - IGBT Temperature

10.2.27.1 Fault Code 41, ID 400 - IGBT Temperature

Cause

The calculated IGBT temperature is too high.

- too high a motor load
- too high an ambient temperature
- hardware malfunction

Troubleshooting

- Check the parameter settings.
- Examine the actual amount and flow of cooling air.
- Check the ambient temperature.
- Examine the heatsink for dust.
- Make sure that the switching frequency is not too high in relation to the ambient temperature and the motor load.
- Check the cooling fan.
- Make an identification run.

10.2.28 Fault Code 43 - Encoder Fault

10.2.28.1 Fault Code 43, ID 420 - Encoder Fault

Cause

- Problem detected in the encoder signals.
- Encoder 1 channel A is missing.

Troubleshooting

- Check the encoder connections.
- Check the encoder and the encoder cable.
- Check the encoder board.
- Check the encoder frequency in open-loop mode.

10.2.28.2 Fault Code 43, ID 421 - Encoder Fault

Cause

- Problem detected in the encoder signals.
- Encoder 1 channel B is missing.

Troubleshooting

- Check the encoder connections.
- Check the encoder and the encoder cable.
- Check the encoder board.
- Check the encoder frequency in open-loop mode.

10.2.28.3 Fault Code 43, ID 422 - Encoder Fault

Cause

- Problem detected in the encoder signals.
- Encoder 1 channels A and B are both missing.

Troubleshooting

- Check the encoder connections.
- Check the encoder and the encoder cable.
- Check the encoder board.
- Check the encoder frequency in open-loop mode.

10.2.28.4 Fault Code 43, ID 423 - Encoder Fault

Cause

The encoder is reversed.

Troubleshooting

- Check the encoder connections.
- Check the encoder and the encoder cable.
- Check the encoder board.
- Check the encoder frequency in open-loop mode.

10.2.28.5 Fault Code 43, ID 424 - Encoder Fault

Cause

The encoder board is missing.

Troubleshooting

- Check the encoder connections.
- Check the encoder and the encoder cable.
- Check the encoder board.
- Check the encoder frequency in open-loop mode.

10.2.28.6 Fault Code 43, ID 425 - Encoder Fault

Cause

Encoder speed deviation supervision.

Troubleshooting

- Check the encoder connections.
- Check the encoder and the encoder cable.
- Check the encoder board.
- Check the encoder frequency in open-loop mode.
- Check the basic motor parameters.

10.2.28.7 Fault Code 43, ID 426 - Encoder Fault

Cause

- Encoder pulse count supervision.
- The estimated encoder pulse count/revolution is different from the value set by the parameter.

Troubleshooting

- Check the encoder pulse count/revolution value.
- Check the encoder coupling (gear ratio, friction wheel).
- Check the basic motor parameters.

10.2.28.8 Fault Code 43, ID 427 - Encoder Fault

Cause

- The maximum acceleration rate is exceeded.
- The motor acceleration calculated from the encoder speed is higher than the actual maximum of the application.

Troubleshooting

- Check the encoder channel connections.
- Check the encoder board.
- Check the encoder and the encoder cable.
- Check the mechanical mounting of the encoder.
- Check the encoder frequency in open-loop mode.

10.2.29 Fault Code 44 - Device Changed (Different Type)

10.2.29.1 Fault Code 44, ID 431 - Device Changed (Different Type)

Cause

- There is a new power unit of a different type. Parameters are not available in the settings.

Troubleshooting

- Reset the fault. The drive reboots after you reset the fault.
- Set the power unit parameters again.

10.2.29.2 Fault Code 44, ID 432 - Device Changed (Different Type)

Cause

- The option board in slot B was replaced by a new one that you have not used before in the same slot. No parameter settings are saved.

Troubleshooting

- Reset the fault. Set the option board parameters again.

10.2.29.3 Fault Code 44, ID 433 - Device Changed (Different Type)

Cause

- The option board in slot C was replaced by a new one that you have not used before in the same slot. No parameter settings are saved.

Troubleshooting

- Reset the fault. Set the option board parameters again.

10.2.29.4 Fault Code 44, ID 434 - Device Changed (Different Type)

Cause

- The option board in slot D was replaced by a new one that you have not used before in the same slot. No parameter settings are saved.

Troubleshooting

- Reset the fault. Set the option board parameters again.

10.2.29.5 Fault Code 44, ID 435 - Device Changed (Different Type)

Cause

- The option board in slot E was replaced by a new one that you have not used before in the same slot. No parameter settings are saved.

Troubleshooting

- Reset the fault. Set the option board parameters again.

10.2.29.6 Fault Code 44, ID 436 - Device Changed (Different Type)

Cause

- The power configuration has changed. The power unit resets and initializes to a different configuration.

Troubleshooting

- Wait until the power unit is reset.

10.2.30 Fault Code 45 - Device Added (Different Type)

10.2.30.1 Fault Code 45, ID 441 - Device Added (Different Type)

Cause

- The control unit has connected to a power unit for the first time.
- There is a new power unit of a different type. Parameters are not available in the settings.

Troubleshooting

- Reset the fault. The drive reboots after you reset the fault.
- Set the power unit parameters again.

10.2.30.2 Fault Code 45, ID 442 - Device Added (Different Type)

Cause

- A new option board, that you have not used before in the same slot, was put in slot B. No parameter settings are saved.

Troubleshooting

- Set the option board parameters again.

10.2.30.3 Fault Code 45, ID 443 - Device Added (Different Type)

Cause

- A new option board, that you have not used before in the same slot, was put in slot C. No parameter settings are saved.

Troubleshooting

- Set the option board parameters again.

10.2.30.4 Fault Code 45, ID 444 - Device Added (Different Type)

Cause

- A new option board, that you have not used before in the same slot, was put in slot D. No parameter settings are saved.

Troubleshooting

- Set the option board parameters again.

10.2.30.5 Fault Code 45, ID 445 - Device Added (Different Type)

Cause

- A new option board, that you have not used before in the same slot, was put in slot E. No parameter settings are saved.

Troubleshooting

- Set the option board parameters again.

10.2.31 Fault Code 46 - Real Time Clock

10.2.31.1 Fault Code 46, ID 662 - Real Time Clock

Cause

- The voltage of the RTC battery is low.

Troubleshooting

- Replace the battery.

10.2.32 Fault Code 47 - Software Update

10.2.32.1 Fault Code 47, ID 661 - Software Update

Cause

- A software update is in progress.
- The software is updating from the control unit to the power unit.

Troubleshooting

- No steps are necessary.

10.2.32.2 Fault Code 47, ID 663 - Software Updated

Cause

- The software of the drive was updated, the full software package or an application.

Troubleshooting

- No steps are necessary.

10.2.33 Fault Code 49 - Precharge

10.2.33.1 Fault Code 49, ID 901 - Pre-charge

Cause

- Main contactor pilot relay open timeout.

Troubleshooting

- Check the main contactor pilot relay wires.

10.2.33.2 Fault Code 49, ID 902 - Pre-charge

Cause

- Main contactor open timeout.

Troubleshooting

- Check the main contactor auxiliary contact wires.

10.2.33.3 Fault Code 49, ID 903 - Pre-charge

Cause

- Pre-charge transformer contactor open timeout.

Troubleshooting

- Check the pre-charge contactor auxiliary contact wires.

10.2.33.4 Fault Code 49, ID 904 - Pre-charge

Cause

- DC link discharge timeout.
- DC link discharge time exceeded the expected discharge time.

Troubleshooting

- Check the mains contactor state and pre-charge wires.

10.2.33.5 Fault Code 49, ID 905 - Pre-charge

Cause

- Front-end fault clear timeout.

Troubleshooting

- If the INU controls the pre-charge, make sure that the AFE does not have a fault. If there is a fault, the pre-charge cannot continue.

10.2.33.6 Fault Code 49, ID 906 - Pre-charge

Cause

- DC-link overvoltage. The pre-charge control sensed an overvoltage.

Troubleshooting

- Check the AFE control signal wires and that the fieldbus connection is active.

10.2.33.7 Fault Code 49, ID 907 - Pre-charge

Cause

- Front-end PLL phase lock lost. The PLL lost the synchronization during the operation.

Troubleshooting

- Make sure that there is no input phase or voltage missing during operation.

10.2.33.8 Fault Code 49, ID 908 - Pre-charge

Cause

- The front end had a fault after it reached the ready state. This fault applies only when the INU controls the pre-charge.

Troubleshooting

- –

10.2.33.9 Fault Code 49, ID 909 - Pre-charge

Cause

- The main contactor closes before the pre-charge control command.

Troubleshooting

- Check the main contactor actuation circuit wires and the feedback wires.

10.2.33.10 Fault Code 49, ID 910 - Pre-charge

Cause

- The main contactor pilot relay closes before the pre-charge control command.

Troubleshooting

- Check the main contactor pilot relay wires.

10.2.33.11 Fault Code 49, ID 911 - Pre-charge

Cause

- The pre-charge sequence was stopped before it was completed.
- The circuit breaker on the pre-charge circuit opened due to:
  - Overheating of the pre-charge unit transformer.
  - A short circuit in the DC link.

Troubleshooting

- If the sequence was not stopped manually, check the pre-charge circuit and protections (pre-charge transformer overcurrent or overtemperature).

10.2.33.12 Fault Code 49, ID 912 - Pre-charge

Cause

- The DC-link charge rate is above the maximum value.
- The DC-link voltage time rate of change exceeded the expected maximum for the given power stage configuration.

Troubleshooting

- Check the pre-charge transformer primary voltage.
- Check the cabling of the phase modules.
- Make sure that the drive configuration has not changed.

10.2.33.13 Fault Code 49, ID 913 - Pre-charge

Cause

- The DC link charge rate is below the minimum value during the pre-charge.
- The DC-link voltage time rate of change is below the expected minimum for the given drive configuration.

Troubleshooting

- Check the pre-charge transformer primary voltage.
- If the system has parallel power circuits, and therefore two pre-charge units, make sure that both pre-charge circuits have input power.
- Make sure that the drive configuration has not changed.

10.2.33.14 Fault Code 49, ID 914 - Pre-charge

Cause

- Pre-charge timeout during DC-link charging. The DC-link voltage rise time to the target voltage was too long.

Troubleshooting

- Check the pre-charge transformer primary voltage and the tap configuration.
- If the system has parallel power circuits, and therefore two pre-charge units, make sure that both pre-charge circuits have input power.

10.2.33.15 Fault Code 49, ID 915 - Pre-charge

Cause

- The DC-link voltage is too low to complete the synchronization.

Troubleshooting

- Make sure that the synchronization threshold voltage is sufficient.
- Make sure that the LC filter capacitance is not too large.

10.2.33.16 Fault Code 49, ID 916 - Pre-charge

Cause

- AFE cannot synchronize with the grid voltage in the approved time limit.

Troubleshooting

- Make sure that the grid voltage is stable or that the imbalance is not too high.

10.2.33.17 Fault Code 49, ID 917 - Pre-charge

Cause

- Main contactor pilot relay close timeout.
- The main contactor pilot relay did not close within the expected time.

Troubleshooting

- Check the relay wiring.

10.2.33.18 Fault Code 49, ID 918 - Pre-charge

Cause

- The AFE lost synchronization with the grid while it waited for the mains contactor to close.

Troubleshooting

- –

10.2.33.19 Fault Code 49, ID 919 - Pre-charge

Cause

- Main contactor close timeout.
- The main contactor did not close within the expected time.

Troubleshooting

- Check the main contactor wiring and main contactor pilot wiring.

10.2.33.20 Fault Code 49, ID 920 - Pre-charge

Cause

- The main contactor opened during the DC stabilization phase.

Troubleshooting

- Check the main contactor wiring and main contactor pilot wiring.

10.2.33.21 Fault Code 49, ID 921 - Pre-charge

Cause

- The front end could not make the DC-link voltage stable in the necessary time.
- The AFE was unable to commit to DC voltage control mode within the allotted time.

Troubleshooting

- Make sure that the grid voltage feedback configuration is correct (line or phase voltage measurement).
- Make sure that the feedback agrees with the AFE phase order.
- Make sure that the phase shift of the potential transformer is accounted for in the PLL adaptation angle parameter.

10.2.33.22 Fault Code 49, ID 922 - Pre-charge

Cause

- The AFE was stopped while the INU was in operation.

Troubleshooting

- Always stop the INU before shutting down the AFE.

10.2.33.23 Fault Code 49, ID 923 - Pre-charge

Cause

- The front end could not keep up the DC-link voltage stabilization.
- AFE or DFE voltage regulation could not be maintained.

Troubleshooting

- Check the DC voltage control parameters and the synchronous current controller parameters.

10.2.33.24 Fault Code 49, ID 924 - Pre-charge

Cause

- Parameter settings changed after the pre-charge sequence was activated.

Troubleshooting

- Do not change the pre-charge configuration after starting the pre-charge sequence.

10.2.33.25 Fault Code 49, ID 925 - Pre-charge

Cause

- The parameter settings are not valid.

Troubleshooting

- Do not select the test modes "disable mains contactor" and "dry run" at the same time.

10.2.33.26 Fault Code 49, ID 926 - Pre-charge

Cause

- Test mode activated while grid voltage is connected.

Troubleshooting

- Do not select the "dry run" test mode while grid voltage is connected.

10.2.33.27 Fault Code 49, ID 927 - Pre-charge

Cause

- The INU had a fault during the pre-charge sequence.

Troubleshooting

- Check the INU status.

10.2.33.28 Fault Code 49, ID 928 - Pre-charge

Cause

- The pre-charge transformer contactor closed unexpectedly after the pre-charge sequence was completed.

Troubleshooting

- Check the pre-charge contactor wiring.

10.2.33.29 Fault Code 49, ID 930 - Pre-charge

Cause

- Breaker enable was lost while the precharge output was active.

Troubleshooting

- –

10.2.34 Fault Code 50 - AI Low Fault

10.2.34.1 Fault Code 50, ID 1050 - AI Low Fault

Cause

- The used analog input signal has gone below 50% of the minimum signal range.
- A control cable is broken or loose.
- A signal source has failed.

Troubleshooting

- Check the control cable connection.
- Check the analog input circuit and signals.
- Replace the defective parts.
- Make sure that parameter AI1 Signal Range is set correctly.

10.2.35 Fault Code 51 - Device External Fault

10.2.35.1 Fault Code 51, ID 1051 - Device External Fault

Cause

- Digital input fault.
- The digital input signal that is set with parameter **Ext Fault Close** (ID 405) or **Ext Fault Open** (ID 406) was activated.

Troubleshooting

- This is a user-defined fault.
- Check the digital inputs and schematics.
- Remove the fault situation on external device.

10.2.36 Fault Code 52 - Keypad Communication Fault

10.2.36.1 Fault Code 52, ID 1052 - Keypad Communication Fault

Cause

- The connection between the control panel and the drive is defective.

Troubleshooting

- Check the control panel connection and the control panel cable if you have it.

10.2.36.2 Fault Code 52, ID 1352 - Keypad Communication Fault

Cause

- The connection between the control panel and the drive is defective.

Troubleshooting

- Check the control panel connection and the control panel cable if you have it.

10.2.37 Fault Code 53 - Fieldbus Communication Fault

10.2.37.1 Fault Code 53, ID 1053 - Fieldbus Communication Fault

Cause

- The data connection between the fieldbus master and the fieldbus board is defective.

Troubleshooting

- Check the installation and fieldbus master.

10.2.37.2 Fault Code 53, ID 1054 - Redundant Switchover

Cause

- The data connection between controlling fieldbus and the drive has timed out. Redundant control has changed the controlling fieldbus connection.

Troubleshooting

- Check the installation and the communication cables.

10.2.37.3 Fault Code 53, ID 1055 - Redundant Timeout

Cause

- The data connection between controlling fieldbus protocols and the drive has timed out.

Troubleshooting

- Check the installation and the communication cables.

10.2.38 Fault Code 54 - Slot Fault

10.2.38.1 Fault Code 54, ID 1354 - Slot A fault

Cause

- A defective option board or slot.

Troubleshooting

- Check the board and the slot.
- Ask for instructions from your nearest distributor.

10.2.38.2 Fault Code 54, ID 1454 - Slot B fault

Cause

- A defective option board or slot.

Troubleshooting

- Check the board and the slot.
- Ask for instructions from your nearest distributor.

10.2.38.3 Fault Code 54, ID 1554 - Slot C fault

Cause

- A defective option board or slot.

Troubleshooting

- Check the board and the slot.
- Ask for instructions from your nearest distributor.

10.2.38.4 Fault Code 54, ID 1654 - Slot D fault

Cause

- A defective option board or slot.

Troubleshooting

- Check the board and the slot.
- Ask for instructions from your nearest distributor.

10.2.38.5 Fault Code 54, ID 1754 - Slot E fault

Cause

- A defective option board or slot.

Troubleshooting

- Check the board and the slot.
- Ask for instructions from your nearest distributor.

10.2.39 Fault Code 57 - Identification

10.2.39.1 Fault Code 57, ID 1057 - Identification

Cause

- There was a failure in the identification run.

Troubleshooting

- Make sure that the motor is connected to the drive.
- Make sure that there is no load on the motor shaft.
- Make sure that the start command is not removed before the identification run is complete.

10.2.39.2 Fault Code 57, ID 1157 - Identification

Cause

- During the identification run, drive was not able to reach required frequency reference.

Troubleshooting

- Make sure that minimum and maximum frequency references are set correctly. Too low maximum frequency can prevent drive from reaching required frequency.

10.2.39.3 Fault Code 57, ID 1257 - Identification

Cause

- During the identification run, drive was not able to reach required frequency reference.

Troubleshooting

- Make sure that acceleration time is set correctly. Too long acceleration time can prevent drive from reaching required frequency in 40 seconds.

10.2.39.4 Fault Code 57, ID 1357 - Identification

Cause

- During the identification run, drive was not able to reach required frequency reference.

Troubleshooting

- Make sure that current, torque, and power limits of the drive are set correctly. Too low limit settings can prevent drive from reaching required frequency.

10.2.40 Fault Code 58 - Mechanical Brake

10.2.40.1 Fault Code 58, ID 1058 - Mechanical Brake

Cause

- The actual status of the mechanical brake is different from the control signal for longer than the value of *Brake Fault Delay* (ID 352).

Troubleshooting

- Check the status and connections of the mechanical brake.
- See parameter *Mech. Brake Feedback* (ID1210) and Mechanical brake parameter group.

10.2.41 Fault Code 59 - Communication

10.2.41.1 Fault Code 59, ID 590 - Communication

Cause

- The Source2 unit cannot connect to the Source3 unit.

Troubleshooting

- Check the power unit connections.

10.2.42 Fault Code 61 - Speed Error Fault

10.2.42.1 Fault Code 61, ID 1061 - Speed Error Fault

Cause

- The difference between encoder frequency and output frequency exceeds the fault limit.

Troubleshooting

- Check the encoder and encoder connections.

10.2.43 Fault Code 63 - Quick Stop

10.2.43.1 Fault Code 63, ID 1063 - Quick Stop Fault

Cause

- The quick stop function is activated by digital input signal or from fieldbus.

Troubleshooting

- Find the cause for the quick stop activation. After you find it, correct it. Reset the fault and restart the drive.
- See parameter *Quick Stop Activation* (ID 1213) and the quick stop parameters.

10.2.43.2 Fault Code 63, ID 1363 - Quick Stop Alarm

Cause

- The quick stop function is activated by digital input signal or from fieldbus.

Troubleshooting

- Find the cause for the quick stop activation. After you find it, correct it. Reset the fault and restart the drive.
- See parameter *Quick Stop Activation* (ID 1213) and the quick stop parameters.

10.2.44 Fault Code 65 - PC Communication Fault

10.2.44.1 Fault Code 65, ID 1065 - PC Communication Fault

Cause

- The data connection between the PC and the drive is defective.

Troubleshooting

- Check the installation, cable, and terminals between the PC and the drive.

10.2.45 Fault Code 66 - Thermistor Input Fault

10.2.45.1 Fault Code 66, ID 1366 - Thermistor Input 1 Fault

Cause

- The motor temperature increased.

Troubleshooting

- Check the motor cooling and the load.
- Check the thermistor connection.
- If the thermistor input is not used, you have to short-circuit it.
- Ask for instructions from your nearest distributor.

10.2.45.2 Fault Code 66, ID 1466 - Thermistor Input 2 Fault

Cause

- The motor temperature increased.

Troubleshooting

- Check the motor cooling and the load.
- Check the thermistor connection.
- If the thermistor input is not used, you have to short-circuit it.
- Ask for instructions from your nearest distributor.

10.2.45.3 Fault Code 66, ID 1566 - Thermistor Input 3 Fault

Cause

- The motor temperature increased.

Troubleshooting

- Check the motor cooling and the load.
- Check the thermistor connection.
- If the thermistor input is not used, you have to short-circuit it.
- Ask for instructions from your nearest distributor.

10.2.46 Fault Code 67 - Module Test Stand

10.2.46.1 Fault Code 67, ID 672 - Module Test Stand

Cause

- Fault ID and code reservation for internal production module test stand. Specific fault information is passed in Source2 and is readable via MtsErrorWord_fi.
- Not for external/customer use!

Troubleshooting

-

10.2.47 Fault Code 68 - Maintenance Counter

10.2.47.1 Fault Code 68, ID 1301 - Maintenance Counter 1 Alarm

Cause

- The value of the maintenance counter is higher than the alarm limit.

Troubleshooting

- Do the necessary maintenance.
- Reset the counter. See parameter *Maintenance Counter 1 Reset* (ID 490).

10.2.47.2 Fault Code 68, ID 1302 - Maintenance Counter 1 Fault

Cause

- The value of the maintenance counter is higher than the fault limit.

Troubleshooting

- Do the necessary maintenance.
- Reset the counter. See parameter *Maintenance Counter 1 Reset* (ID 490).

10.2.48 Fault Code 69 - Fieldbus Mapping Error

10.2.48.1 Fault Code 69, ID 1310 - Fieldbus Mapping Error

Cause

- The ID number that is used to map the values to Fieldbus Process Data Out is not valid.

Troubleshooting

- Check the parameters in the Fieldbus Data menu.

10.2.48.2 Fault Code 69, ID 1311 - Fieldbus Mapping Error

Cause

- It is not possible to convert 1 or more values for Fieldbus Process Data Out.
- The type of the value is undefined.

Troubleshooting

- Check the parameters in the Fieldbus Data menu.

10.2.48.3 Fault Code 69, ID 1312 - Fieldbus Mapping Error

Cause

- There is an overflow when the values for Fieldbus Process Data Out (16-bit) are mapped and converted.

Troubleshooting

- Check the parameters in the Fieldbus Data menu.

10.2.49 Fault Code 76 - Start Prevented

10.2.49.1 Fault Code 76, ID 1076 - Start Prevented

Cause

- The start command is blocked to prevent the accidental rotation of the motor during the first power-up.

Troubleshooting

- Reset the drive to start the correct operation. The parameter settings tell if it is necessary to restart the drive.

10.2.50 Fault Code 77 - >5 Connections

10.2.50.1 Fault Code 77, ID 1077 - > 5 Connections

Cause

- There are more than 5 active fieldbus or PC tool connections. You can use only 5 connections at the same time.

Troubleshooting

- Leave 5 active connections. Remove the other connections.

10.2.51 Fault Code 78 - Identification Ongoing

10.2.51.1 Fault Code 78, ID 1078 - Identification Ongoing

Cause

- The drive is running the identification for the motor.

Troubleshooting

- You can stop the identification run at any time by removing the start command. When the identification run is completed, a new start command is needed to start the drive.

10.2.52 Fault Code 80 - Fieldbus Watchdog Fault

10.2.52.1 Fault Code 80, ID 1080 - FB Watchdog Fault

Cause

- There is no communication between the fieldbus master and the fieldbus follower.

Troubleshooting

- Check the installation and the fieldbus master.

10.2.53 Fault Code 84 - Overspeed Error

10.2.53.1 Fault Code 84, ID 1084 - Overspeed Error

Cause

- The motor speed is over the speed limit.

Troubleshooting

- –

10.2.54 Fault Code 111 - Temperature Input Fault 1

10.2.54.1 Fault Code 111, ID 1315 - Temperature Fault 1

Cause

- 1 or more of the temperature input signals (set in parameter ID 739) is higher than the alarm limit (parameter ID 741).

Troubleshooting

- Find the cause of the temperature rise.
- Check the parameters in the *Temperature Input Fault 1* menu.
- Check the temperature sensor and connections.

- If no sensor is connected, make sure that the temperature input is hardwired.
- See the option board manual for more data.

10.2.54.2 Fault Code 111, ID 1316 - Temperature Fault 1

Cause

- 1 or more of the temperature input signals (set in parameter ID 739) is higher than the fault limit (parameter ID 742).

Troubleshooting

- Find the cause of the temperature rise.
- Check the parameters in the *Temperature Input Fault 1* menu.
- Check the temperature sensor and connections.
- If no sensor is connected, make sure that the temperature input is hardwired.
- See the option board manual for more data.

10.2.55 Fault Code 112 - Temperature Input Fault 2

10.2.55.1 Fault Code 112, ID 1317 - Temperature Fault 2

Cause

- 1 or more of the temperature input signals (set in parameter ID 763) is higher than the alarm limit (parameter ID 764).

Troubleshooting

- Find the cause of the temperature rise.
- Check the parameters in the *Temperature Input Fault 2* menu.
- Check the temperature sensor and connections.
- If no sensor is connected, make sure that the temperature input is hardwired.
- See the option board manual for more data.

10.2.55.2 Fault Code 112, ID 1318 - Temperature Fault 2

Cause

- 1 or more of the temperature input signals (set in parameter ID 763) is higher than the fault limit (parameter ID 765).

Troubleshooting

- Find the cause of the temperature rise.
- Check the parameters in the *Temperature Input Fault 2* menu.
- Check the temperature sensor and connections.
- If no sensor is connected, make sure that the temperature input is hardwired.
- See the option board manual for more data.

10.2.56 Fault Code 114 - User Defined Fault 1

10.2.56.1 Fault Code 114, ID 1114 - User Defined Fault 1

Cause

- This user-defined fault was activated either from a digital input, fieldbus, the drive customizer, or a time channel.

Troubleshooting

- See parameter menu *User Defined Fault 1* to find out the source of the fault activation.

10.2.57 Fault Code 115 - User Defined Fault 2

10.2.57.1 Fault Code 115, ID 1115 - User Defined Fault 2

Cause

- This user-defined fault was activated either from a digital input, fieldbus, the drive customizer, or a time channel.

Troubleshooting

- See parameter menu *User Defined Fault 2* to find out the source of the fault activation.

10.2.58 Fault Code 200 - Precharge

10.2.58.1 Fault Code 200, ID 1721 - MCB/Interlock Fault

Cause

- MCB is lost or interlock is required for power-on.

Troubleshooting

- –

10.2.58.2 Fault Code 200, ID 1722 - Leak Detector Fault

Cause

- Leak detection issue.

Troubleshooting

- –

10.2.58.3 Fault Code 200, ID 1723 - Overtemp in LCL

Cause

- Overtemperature detected in LCL component.

Troubleshooting

- –

10.2.58.4 Fault Code 200, ID 1724 - Cooling Fault

Cause

- Loss of "Cooling OK" from heat exchanger, or loss of cabinet cooling.

Troubleshooting

- –

10.2.58.5 Fault Code 200, ID 1725 - Cooling Ok Timeout

Cause

- The cooling system did not reach OK status in time.

Troubleshooting

- –

10.2.58.6 Fault Code 200, ID 1726 - Precharge Contactor Close Timeout

Cause

- Precharge contactor did not close within the timeout period after the close command.

Troubleshooting

- –

10.2.58.7 Fault Code 200, ID 1727 - Loss of Precharge Permissive

Cause

- Unexpected loss of "Precharge permissive".

Troubleshooting

- –

10.2.58.8 Fault Code 200, ID 1728 - Loss of MX Permissive

Cause

- Loss of breaker (MX) permissive.

Troubleshooting

- –

10.2.58.9 Fault Code 200, ID 1729 - GSW/UFES Fault

Cause

- GSW or UFES is in the wrong position.

Troubleshooting

- –

10.2.58.10 Fault Code 200, ID 1731 - DC Cap Overpressure

Cause

- Overpressure detected in the DC-link capacitors.

Troubleshooting

- –

10.2.59 Fault Code 201 - High Humidity/Temperature

10.2.59.1 Fault Code 201, ID 1730 - High Humidity/Temperature

Cause

- The humidity or temperature switches indicate a high condition.

Troubleshooting

- –

10.2.60 Fault Code 202 - Encoder

10.2.60.1 Fault Code 202, ID 1740 - Encoder Difference

Cause

- Encoder measurement difference exceeds 2x limit during operation.

Troubleshooting

- –

10.2.60.2 Fault Code 202, ID 1741 - Encoder Difference

Cause

- Encoder measurement difference exceeds the limit at overcurrent/overvoltage fault.

Troubleshooting

- –

10.2.60.3 Fault Code 202, ID 1742 - Fall Back to OL

Cause

- Overcurrent or overvoltage fault occurred during transition from closed loop to open loop.

Troubleshooting

- –

10.2.61 Fault Code 203 - STO Fault

10.2.61.1 Fault Code 203, ID 1735 - STO Fault

Cause

- The STO input is active.

Troubleshooting

- –

10.2.62 Fault Code 204 - Output Filter

10.2.62.1 Fault Code 204, ID 1744 - Output Filter

Cause

- A component in the output filter has overtemperature or overpressure.

Troubleshooting

- –

10.2.63 Fault Code 205 - Coolant Temperature

10.2.63.1 Fault Code 205, ID 1745 - Coolant Temperature

Cause

- Coolant temperature ≥ 70.0 °C (158 °F).

Troubleshooting

- –

10.2.63.2 Fault Code 205, ID 1745 - Coolant Temperature

Cause

- Coolant temperature ≤ -10.0 °C (14 °F).

Troubleshooting

- –

10.2.64 Fault Code 300 - Unsupported

10.2.64.1 Fault Code 300, ID 700 - Unsupported

Cause

- The application is not compatible (it is unsupported).

Troubleshooting

- Replace the application.

10.2.64.2 Fault Code 300, ID 701 - Unsupported

Cause

- The option board or the slot is not compatible (it is unsupported).

Troubleshooting

- Remove the option board.

11 Specifications

11.1 Power Ratings

11.1.1 Power Ratings for Mains Voltage 3300 V

Table 44: Power Ratings for the VACON® 3000 AFE and 12-Pulse Drives, 3300 V Supply

Drive type code[1]	Continuous rating (variable torque)		Low overload rating 110% (constant torque)		High overload rating 150% (constant torque)		Output phase modules
	Continuous power [kVA]	Continuous current I_{th} [A]	Continuous power [kVA]	Continuous current I_{th} [A]	Continuous power [kVA]	Continuous current I_{th} [A]	
VACON3000-ED-XX-0425-03	2430	425	2209	386	1620	283	3 x L20
VACON3000-ED-XX-0640-03	3660	640	3327	582	2440	427	3 x L30
VACON3000-ED-XX-0820-03	4690	820	4264	745	3127	547	6 x L20
VACON3000-ED-XX-1230-03	7030	1230	6391	1118	4680	820	6 x L30

[1] XX = 4Q or 12

11.1.2 Power Ratings for Mains Voltage 4160 V

Table 45: Power Ratings for the VACON® 3000 AFE and 12-Pulse Drives, 4160 V Supply

Drive type[1]	Continuous rating (variable torque)		Low overload rating 110% (constant torque)		High overload rating 150% (constant torque)		Output phase modules
	Continuous power [kVA]	Continuous current I_{th} [A]	Continuous power [kVA]	Continuous current I_{th} [A]	Continuous power [kVA]	Continuous current I_{th} [A]	
VACON3000-ED-XX-0340-04	2450	340	2227	309	1633	227	3 x L20
VACON3000-ED-XX-0510-04	3670	510	3336	464	2450	340	3 x L30
VACON3000-ED-XX-0650-04	4680	650	4255	591	3120	433	6 x L20
VACON3000-ED-XX-0980-04	7060	980	6418	891	4680	650	6 x L30

[1] XX = 4Q or 12

11.1.3 Overload Capability

The **low overload** means that if 110% of the continuous current (I_L) is required for 1 minute every 10 minutes, the remaining 9 minutes must be approximately 98% of I_L or less. This is to make sure that the output current is not more than I_L during the duty cycle.

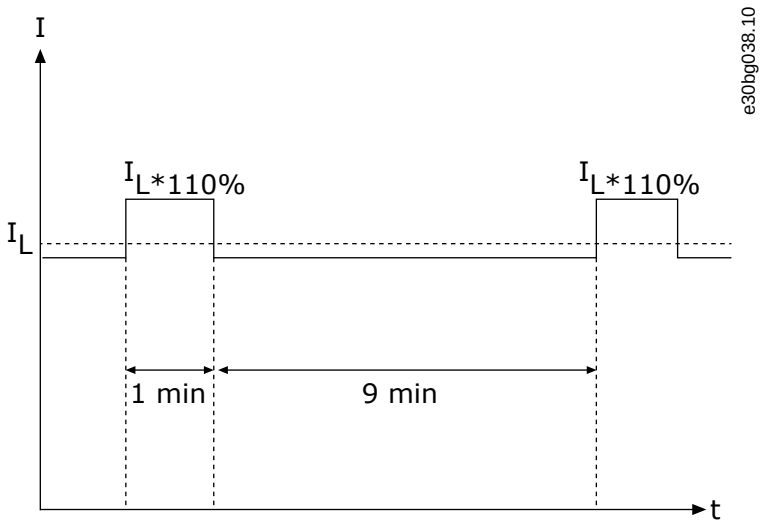

Illustration 83: Low Overload

The **high overload** means that if 150% of the continuous current (I_H) is required for 1 minute every 10 minutes, the remaining 9 minutes must be approximately 92% of I_H or less. This is to make sure that the output current is not more than I_H during the duty cycle.

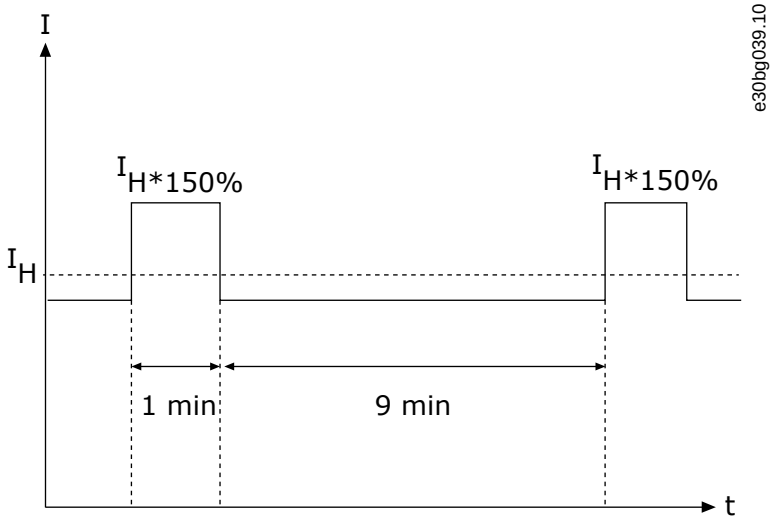

Illustration 84: High Overload

For more information, refer to the standard IEC61800-2.

11.2 Technical Data

11.2.1 Mains Supply

Table 46: Mains Supply Specifications

Item or function	Specification
Input voltage U_{in}	**AFE** 3300 V AC ±10% 4160 V AC ±10%

Item or function	Specification
(supply transformer secondary voltage)	**12-pulse** 1850 V AC ±10% 2360 V AC ±10% For operation outside these voltage ranges, contact Danfoss.
Input frequency	3300 V AC: 50 Hz ± 5% 4160 V AC: 60 Hz ± 5%
Supply transformer requirements	**AFE** Nominal power: Motor power +10% Recommended short circuit impedance: See 11.2.7 Source Impedance Specifications Vector group: Dy11 Primary winding configuration: Delta Secondary winding terminal voltage at full Load: 3300/4160 V **N O T I C E** **INPUT COMMON-MODE FILTER** In VACON® 3000 AFE installations, which are not supplied by a dedicated transformer, always install an input common-mode filter (available as option +PICM).
	12-pulse Nominal apparent power: ~ Motor shaft power +20% Recommended short circuit impedance: Minimum 11% (referred to 7500 kVA transformer including supply side grid impedance) Vector group example: Dy5Dd0 Primary winding configuration: Delta Secondary winding configuration: 30° phase shifted Secondary winding A terminal voltage at no Load: ~ 1850/2360 V Secondary winding B terminal voltage at no Load: ~ 1850/2360 V Recommended BIL (secondary side): Minimum 30 kV A shield is recommended between primary and secondary. Inter-phase balance: < 1% Inter-winding balance: < ±0.5%

11.2.2 Motor Output

Table 47: Motor output specifications

Item or function	Specification
Output voltage	0 - U_{in}
Output current ratings (RMS)	3300 V AC: 425 A, 640 A, 820 A, 1230 A 4160 V AC: 340 A, 510 A, 650 A, 980 A
Output frequency	0–120 Hz
Output dU/dt	5 kV/µs
Motor type	Induction motor For operation of synchronous or PM motors, contact Danfoss.

11.2.3 Control Properties

Table 48: Control Properties

Item or function	Specification
Control method	U/f control Open loop control (sensorless vector control) Indirect closed loop control (augmented sensorless vector control) Closed loop control (field-oriented)
Switching frequency	AFE: 1050 Hz (50 Hz input) / 1260 Hz (60 Hz input) INU: 900 Hz (synchronous PWM with SoftSync)
Acceleration time	0.1 - 3600 s
Deceleration time	0.1 - 3600 s
Control power (power module)	3 A, 24 V DC (±10%) per power module (customer supplied) Pluggable Mini Terminal Blocks, Phoenix Contact, female part 1829358 in power module (male part delivered with power module) An isolation (safety) transformer is necessary for the control power for the power modules
Control power (control unit)	3 A, 24 V DC (±5%) per control unit (customer supplied)
Communication	AI/O, DI/O, fieldbuses (e.g. Profibus DPV1, CANopen, DeviceNet), industrial ethernet protocols (Profinet IO & Ethernet/IP), VACON® PC tool
Main protective functions	Torque and power limit, current limit, overcurrent, overvoltage, undervoltage, loss of auxiliary power, loss of communication, ground fault detection

11.2.4 Drive Properties

Table 49: Drive Properties

Item or function	Specification
Power module topology	3-level neutral point clamped (NPC)
Rectifier types	Active front end (AFE) 12-pulse DFE (requires a dedicated transformer with 2 secondary windings)
Number of power conversion units	**Input** AFE: 3 or 6 DFE: 1
	Output INU: 3 or 6
Grounding	Resistance grounded neutral point, high resistance grounding system of electricity supply, if no dedicated transformer is installed. For operation in an IT network without a dedicated transformer, consult Danfoss.
Power device	HV IGBT
Rating	100% continuous load (>12 Hz output frequency)
Efficiency (at full load and nominal conditions, approximate typical losses, without output filters)	AFE: ≥ 97.8% AFE +PICM: ≥ 97.4% 12-pulse: ≥ 98.8%

Item or function	Specification
DC-link voltage	AFE 3300 V AC: 5.2 kV DC AFE 4160 V AC: 6.6 kV DC 12-pulse 1850 V AC: 5.2 kV DC (no load) 12-pulse 2360 V AC: 6.6 kV DC (no load)
DC-link discharge time	AFE: < 7 minutes 12-pulse: < 21 minutes **⚠ D A N G E R ⚠** **SHOCK HAZARD FROM THE DC LINK** A contact with the DC-link voltage can lead to death or serious injury. – Wait after the AC drive is disconnected from the mains for the DC link to discharge. Use a measuring device to make sure that there is no voltage.
Short-circuit current rating (SCCR)	AFE/12-pulse: 25 kA, 100 ms AFE with option +PUFE: 40 kA, 100 ms
Input current THDi	AFE: < 5% (at rated load) 12-pulse: < 15% (at rated load)
Power factor	> 0.95 (at rated load)
Approximate power module losses to liquid at nominal load for each module[2]	L20: 4.5–5.5 kW (340–425 A) L30: 8–9 kW (510–640 A) D22: 2–8 kW (340–640 A)
Creepage distance between terminals	L20/L30: 87 mm (3.42 in) D22: • Front (DC) terminals: 67 mm (2.63 in) • Back (AC) terminals: 130 mm (5.11 in)
Clearance distance between terminals	L20/L30: 46 mm (1.81 in) D22: • Front (DC) terminals: 46 mm (1.81 in) • Back (AC) terminals: 99 mm (3.89 in)
Protection level	IEC: IP54 UL: NEMA 3S

[2] The losses to air are much smaller than losses to liquid.

11.2.5 Ambient Conditions

Table 50: Ambient Condition Specifications

Item or function	Specification
Ambient operating temperature	0°C … +45°C (+32°F ... +113°F)

Item or function	Specification
	If operation in below 0°C temperature is required, contact Danfoss for instructions.
Storage temperature	-40°C … +70°C (-40°F ... +158°F) No liquid in the heat sink under 0°C (+32°F)
Relative humidity (operation/storage)	< 95% RH, non-condensating, non-corrosive
Altitude	VACON® 3000 is rated for operation at up to 2000 m without thermal or electrical derating. VACON® 3000 with nominal voltage 3300 V is rated electrically for operation at up to 4000 m, if certified per IEC 61800-5-1 (not UL347A, option +GAUL). For thermal derating above 2000 m, contact Danfoss. The thermal derating above 2000 m depends only on the inductors of the input and output filters.

11.2.6 Cooling

Table 51: Cooling Specifications

Item or function	Specification
Cooling type	Liquid cooling, closed loop with constant flow of cooling liquid
Required cooling liquid flow rate[1]	L20: 25 l/min ± 4 l/min (6.6 gal/min ± 1.1 gal/min) L30: 37 l/min ± 6 l/min (9.8 gal/min ± 1.6 gal/min) D22: 25–80 l/min (6.6–21.1 gal/min) Inductor HX: 25 l/min ± 4 l/min (6.6 gal/min ± 1.1 gal/min)
Cooling liquid pressure drop inside component (heat sink/HX)[2]	L20 with connectors: 1.13 bar (16.4 psi) L20 without connectors: 0.83 bar (12 psi) L30 with connectors: 1.08 bar (16 psi) L30 without connectors: 0.69 bar (10 psi) D22: 0.07–0.41 bar (1–6 psi) LCV: 3 bar (43.5 psi) LGI: 3 bar (43.5 psi) LCM: 3.2 bar (46.4 psi) LSI: 3 bar (43.5 psi)
Maximum static pressure of cooling liquid (heat sink/HX)	10 bar (145 psi)
Test pressure for cooling liquid in power module heat sink	16 bar (232 psi)
The cooling liquid volume of the components (heat sink/HX)	L20: 500 ml (16.9 fl oz) L30: 700 ml (23.7 fl oz) D22: 2000 ml (67.6 fl oz) LCV: 750 ml (25.4 fl oz) LGI: 750 ml (25.4 fl oz) LCM: 650 ml (22.0 fl oz) LSI: 750 ml (25.4 fl oz)
Recommended cooling liquid type	80% water with 20% glycol (% mixture based on the required freezing temperature requirement), type DOWTHERM SR-1
Cooling liquid temperature	0°C ... +43°C (+32°F ... +109°F) The cooling liquid temperature must be kept 2°C (3.6°F) above dew point

Item or function	Specification
Cooling liquid temperature rise in power module	Typical temperature difference between inlet and outlet is below 4°C (7.2°F). (3)
Cooling connection	L20/L30: G 0.5 in holes with threads (BSPP: ISO/DIN 1179-1) in heat sink with removable shipping plugs. D22: G 0.75 in holes with threads. No connectors included.
Hose	Non-conductive (customer supplied) Recommended: Parker Parflex 83FR-8 (inner diameter: 12.7 mm, 0.5 in) **NOTICE** **HOSE SIZE** A 19 mm (0.75 in) hose can be necessary if the hoses are long or if the capacity of the heat exchanger is low.
Recommended connectors or adapters	Heat sink connector: G 12.7 mm (0.5 in) male stud straight adapter thread BSP parallel (World wide metric #310408) Hose connection: Stainless steel BSP Swivel female, ball nose type (Parker 19255-8-8C), or BSP female Swivel 90° elbow, ball nose type (Parker 1B255-8-8C) Sealing kit: G 12.7 mm (0.5 in) O-ring and retaining ring set (from Stäubli)
Recommended flow restrictors (stainless steel)[4]	L20 = 30 l/min (7.9 gal/min), Kobold REG-3230D L30 = 40 l/min (10.6 gal/min), Kobold REG-3240D Inductor HX = 25 l/min (6.6 gal/min), Kobold REG-1225D
Cooling of passive components (external inductors)	Forced air cooling. External fans are necessary.

[1] Values defined with a 70/30% water/glycol mix. If a higher concentration of glycol is required, contact Danfoss for more information.

[2] Values measured with a 70/30% water/glycol mix, the required flow rates, and the recommended connectors (from CEJN). The pressure drop is quadratically related to the cooling liquid flow rate.

[3] With a 70/30% water/glycol mix and flow rate 25 l/min.

[4] Install the flow restrictors on the outlet side of the components, not on the inlet side.

11.2.7 Source Impedance Specifications

This section describes the source impedance specifications for VACON® 3000 AFE drives. Two tables are provided to help with the selection of the drive type.

For VACON® 3000 AFE drives without a dedicated transformer, Table 52 gives example combinations of the apparent power (S_b) and relative impedance (X_S) values and the corresponding source inductance (L_S). The short circuit power (S_{sc}) of the feeding grid is also given in the table.

For VACON® 3000 AFE drives with a dedicated transformer, L_{total} values are given in Table 53.

L_{total} is the sum of the grid inductance and the stray inductance of the transformer: $L_{total} = L_S + L_{xf}$.

The table gives values for two types of installation locations:

- SSI: Grid with a small source impedance
- HSI: Grid with a high source impedance

The output voltage of the transformer is 3300 V or 4160 V (see the drive type code).

If the grid frequency (f_{grid}) is different to the one in the table, contact Danfoss for instructions.

If more than one drive is connected to the grid, contact Danfoss for instructions.

Table 52: Source Impedance Specifications for VACON® 3000 AFE Drives without a Dedicated Transformer

Drive Type Code	Type	f_{grid} (Hz)	Example		S_{sc} (MVA)	L_s (µH)
			S_b (MVA)	X_s (%)		
VACON3000-ED-4Q-0340-04+PICM	SSI	60	≥8.3	15	≥55.0	**≤835**
			≤25.0	15	≤166.7	**≥275**
VACON3000-ED-4Q-0340-04+PICM+PHSI	HSI	60	≥3.3	15	≥22.0	**≤2087**
			≤10.0	15	≤66.7	**≥689**
VACON3000-ED-4Q-0425-03+PICM	SSI	50	≥8.3	15	≥55.0	**≤630**
			≤25.0	15	≤166.7	**≥208**
VACON3000-ED-4Q-0425-03+PICM+PHSI	HSI	50	≥3.3	15	≥22.0	**≤1576**
			≤10.0	15	≤66.7	**≥520**
VACON3000-ED-4Q-0510-04+PICM	SSI	60	≥8.3	15	≥55.0	**≤835**
			≤25.0	15	≤166.7	**≥275**
VACON3000-ED-4Q-0510-04+PICM+PHSI	HSI	60	≥3.5	15	≥23.6	**≤1947**
			≤10.0	15	≤66.7	**≥689**
VACON3000-ED-4Q-0640-03+PICM	SSI	50	≥8.3	15	≥55.0	**≤630**
			≤25.0	15	≤166.7	**≥208**
VACON3000-ED-4Q-0640-03+PICM+PHSI	HSI	50	≥3.5	15	≥23.6	**≤1471**
			≤10.0	15	≤66.7	**≥520**
VACON3000-ED-4Q-0650-04+PICM	SSI	60	≥16.5	15	≥110.0	**≤417**
			≤50.0	15	≤333.3	**≥138**
VACON3000-ED-4Q-0650-04+PICM+PHSI	HSI	60	≥6.6	15	≥44.0	**≤1043**
			≤20.0	15	≤133.3	**≥344**
VACON3000-ED-4Q-0820-03+PICM	SSI	50	≥16.5	15	≥110.0	**≤315**
			≤50.0	15	≤333.3	**≥104**
VACON3000-ED-4Q-0820-03+PICM+PHSI	HSI	50	≥6.6	15	≥44.0	**≤788**
			≤20.0	15	≤133.3	**≥260**
VACON3000-ED-4Q-0980-04+PICM	SSI	60	≥16.5	15	≥110.0	**≤417**
			≤50.0	15	≤333.3	**≥138**
VACON3000-ED-4Q-0980-04+PICM+PHSI	HSI	60	≥7.1	15	≥47.1	**≤974**
			≤20.0	15	≤133.3	**≥344**
VACON3000-ED-4Q-1230-03+PICM	SSI	50	≥16.5	15	≥110.0	**≤315**

Drive Type Code	Type	f_{grid} (Hz)	Example		S_{sc} (MVA)	L_s (µH)
			S_b (MVA)	X_s (%)		
			≤50.0	15	≤333.3	**≥104**
VACON3000-ED-4Q-1230-03+PICM+PHSI	HSI	50	≥7.1	15	≥47.1	**≤735**
			≤20.0	15	≤133.3	**≥260**

Example

A VACON® 3000 AFE without a dedicated transformer with nominal motor current of 340 A is to be installed in a marine 4160 V grid.

- U_{in} = 4160 V
- f = 60 Hz

The lumped generator apparent power S_b = 6 MVA, with a subtransient reactance X_d" = X_S = 15%. Thus, the grid source inductance is:

$$L_s = \frac{U_{in}^2}{S_b} \times \frac{X_s}{2\pi f} = \frac{(4160\ V)^2}{6\ \text{MVA}} \times \frac{0.15}{2\pi \times 60\ \text{Hz}} \approx 1.15\ \text{mH}$$

Since L_S is between 689 µH and 2.087 mH, the +PHSI option is required in addition to +PICM. Therefore, VACON3000-ED-4Q-0340-04 +PICM+PHSI must be selected.

Example

A VACON® 3000 AFE without a dedicated transformer with nominal motor current of 640 A is to be installed in a 3300 V grid.

- U_{in} = 3300 V
- f = 50 Hz

The short circuit power (S_{sc}) of the feeding grid is 100 MVA. Thus, the grid source inductance is:

$$L_s = \frac{U_{in}^2}{2\pi f \times S_{sc}} = \frac{(3300\ V)^2}{2\pi \times 50\ \text{Hz} \times 100\ \text{MVA}} \approx 347\ \mu H$$

Since L_S is between 208–630 µH, drive type VACON3000-ED-4Q-0640-03+PICM must be selected.

Table 53: Source Impedance Specifications for VACON® 3000 AFE Drives with a Dedicated Transformer

Drive Type Code	Type	f_{grid} (Hz)	L_{total} (µH)
VACON3000-ED-4Q-0340-04	SSI	60	**≤2035**
			≥1475
VACON3000-ED-4Q-0340-04+PHSI	HSI	60	**≤3287**
			≥1889
VACON3000-ED-4Q-0425-03	SSI	50	**≤1630**
			≥1208
VACON3000-ED-4Q-0425-03+PHSI	HSI	50	**≤2826**
			≥1770
VACON3000-ED-4Q-0510-04	SSI	60	**≤1685**
			≥1125
VACON3000-ED-4Q-0510-04+PHSI	HSI	60	**≤3297**
			≥2039

Drive Type Code	Type	f_{grid} (Hz)	L_{total} (µH)
VACON3000-ED-4Q-0640-03	SSI	50	**≤1380**
			≥958
VACON3000-ED-4Q-0640-03+PHSI	HSI	50	**≤1971**
			≥1020
VACON3000-ED-4Q-0650-04	SSI	60	**≤1017**
			≥738
VACON3000-ED-4Q-0650-04+PHSI	HSI	60	**≤1643**
			≥944
VACON3000-ED-4Q-0820-03	SSI	50	**≤815**
			≥604
VACON3000-ED-4Q-0820-03+PHSI	HSI	50	**≤1413**
			≥885
VACON3000-ED-4Q-0980-04	SSI	60	**≤842**
			≥563
VACON3000-ED-4Q-0980-04+PHSI	HSI	60	**≤1649**
			≥1019
VACON3000-ED-4Q-1230-03	SSI	50	**≤690**
			≥479
VACON3000-ED-4Q-1230-03+PHSI	HSI	50	**≤985**
			≥510

Example

A VACON® 3000 AFE with a nominal motor current of 1230 A and nominal motor voltage of 3300 V is to be installed in a land-based grid.

- U_{in} = 3300 V
- f = 50 Hz

The VACON® 3000 is supplied by a dedicated transformer with:

- Base power of transformer, S_{xf} = 6.6 MVA
- X_s = 6%

The feeding grid voltage can be, for example, 11 kV, but is not relevant for this calculation. The transformer secondary voltage must be selected the same as the motor voltage (U_{in} = 3300 V).

The short circuit power (S_{sc}) of the feeding grid is 200 MVA. Thus, the lumped input inductance to the drive is the sum of the grid inductance and transformer stray inductance, both referred to the secondary side:

$$L_{total} = L_s + L_{xf} = \frac{U_{in}^2}{2\pi \times f \times S_{sc}} + \frac{U_{in}^2 \times X_s}{2\pi \times f \times S_{xf}} = \frac{U_{in}^2}{2\pi \times f} \times \left(\frac{1}{S_{sc}} + \frac{X_s}{S_{xf}}\right) = \frac{(3300\ V)^2}{2\pi \times 50\ \text{Hz}} \times \left(\frac{1}{200\ \text{MVA}} + \frac{0.06}{6.6\ \text{MVA}}\right) = 173\ \mu H\ +\ 315\ \mu H = 488\ \mu H$$

Since the L_{total} is between 479–690 µH, drive type VACON3000-ED-4Q-1230-03 must be selected. The total inductance could be up to 690 µH. Therefore, for this VACON® 3000 variant, a transformer with a slightly higher stray inductance could be selected.

11.3 Main Circuit Diagrams

Only main level circuit diagrams of the drive are shown in this chapter. For complete main circuit diagrams, see the project-specific documentation provided in the VACON® 3000 Enclosed Drive delivery.

11.3.1 VACON® 3000 AFE Main Circuit Diagrams

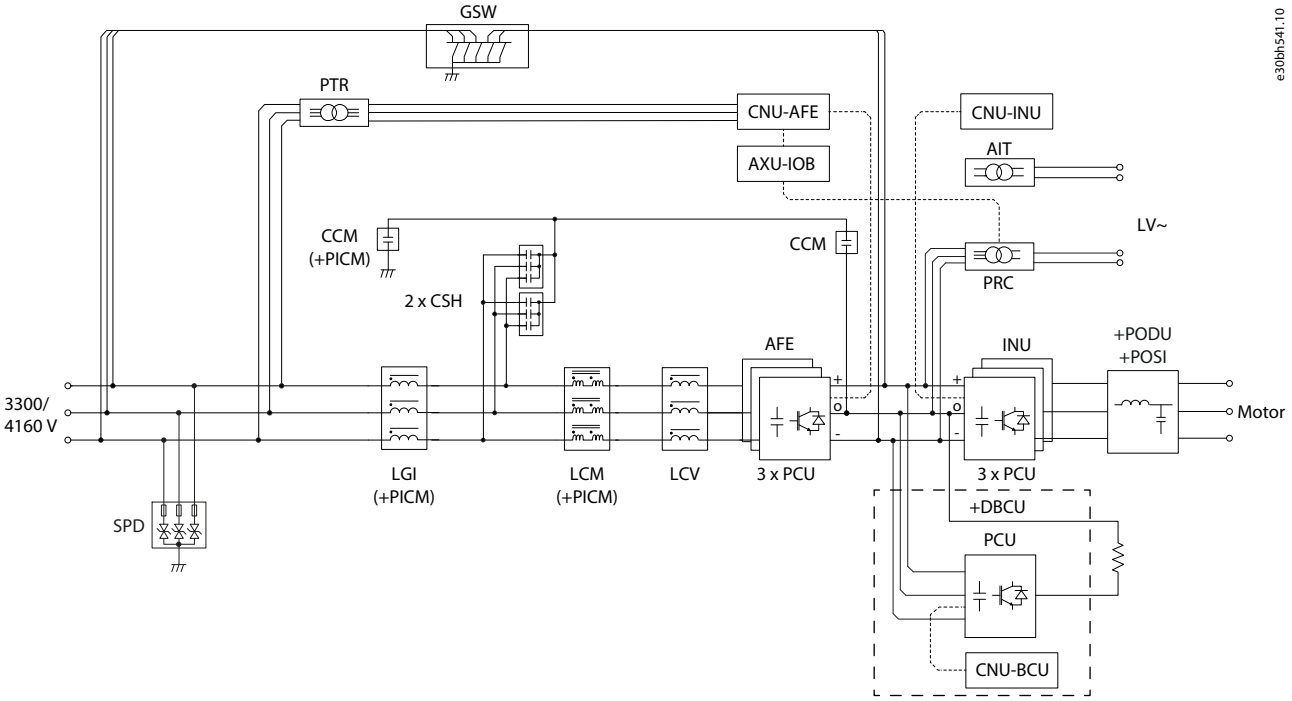

Illustration 85: Main Circuit Diagram for VACON® 3000 AFE, 3.3 kV 425/640 A, 3.3 kV 640 A with Option +PHSI and 4.16 kV 340/510 A with Option + PHSI

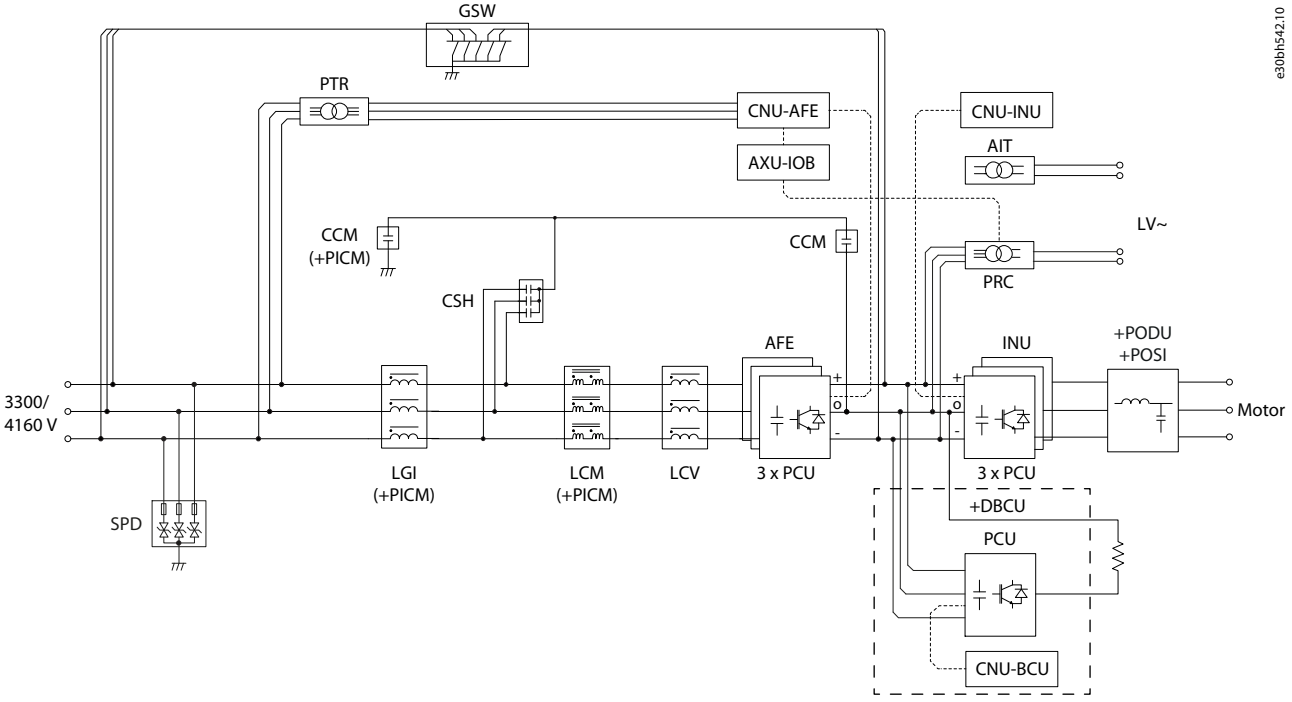

Illustration 86: Main Circuit Diagram for VACON® 3000 AFE, 4.16 kV 340/510 A, and 3.3 kV 425 A with Option +PHSI

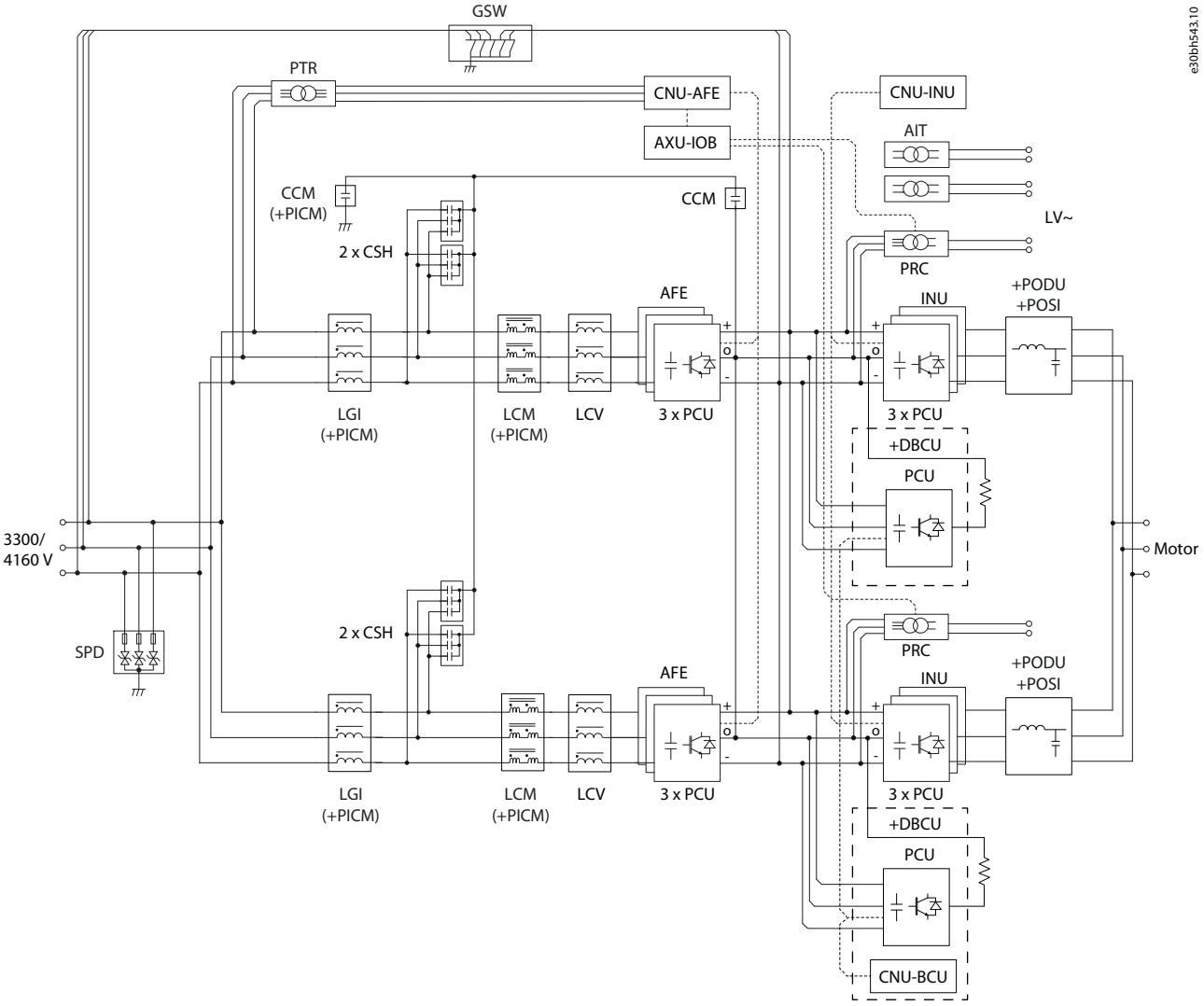

Illustration 87: Main Circuit Diagram for VACON® 3000 AFE, 3.3 kV 820/1230 A, 3.3 kV 1230 A with Option +PHSI and 4.16 kV 650/980 A with Option +PHSI

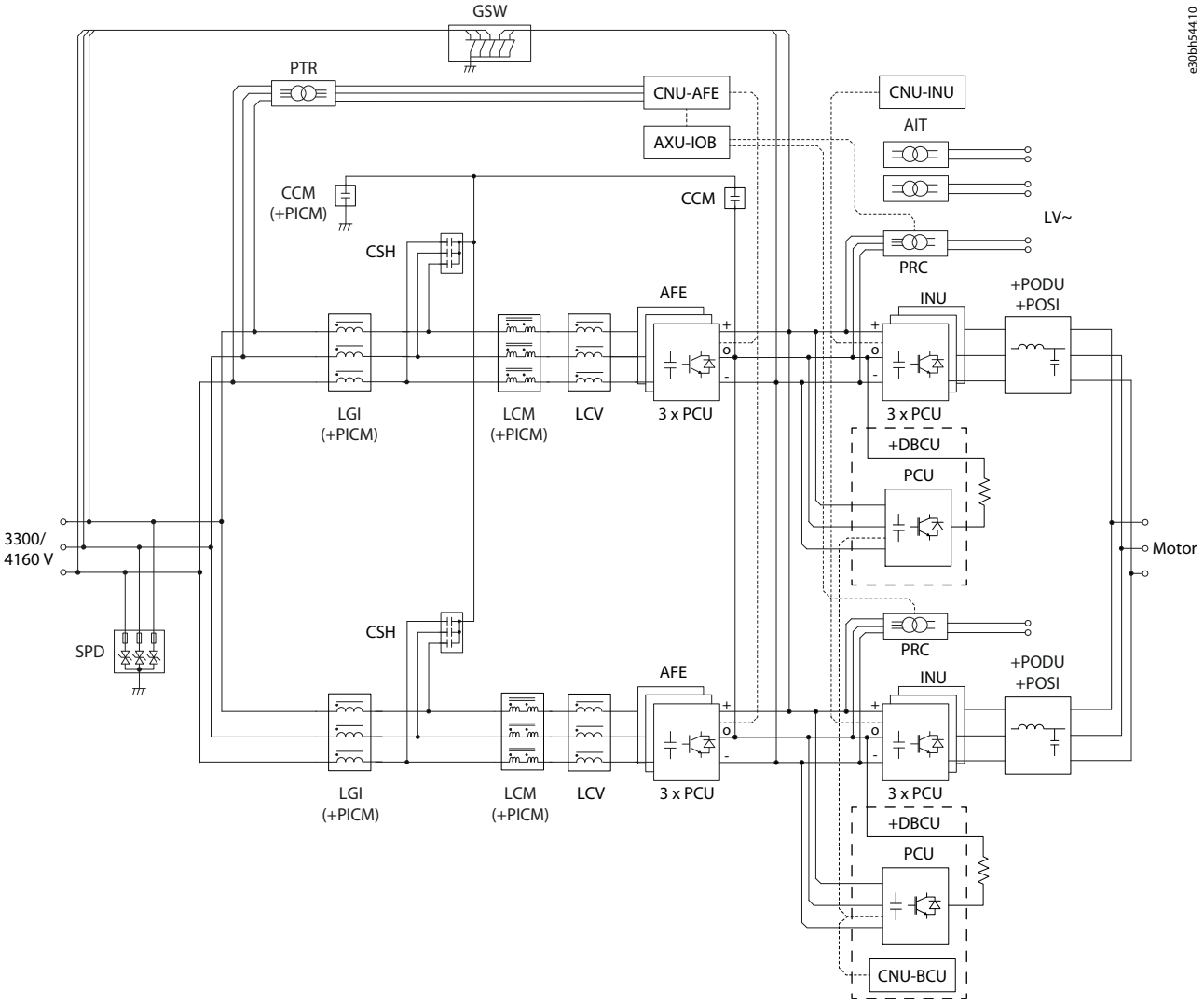

Illustration 88: Main Circuit Diagram for VACON® 3000 AFE, 4.16 V 650/980 A, and 3.3 kV 820 A with Option +PHSI

11.3.2 VACON® 3000 12-Pulse Main Circuit Diagrams

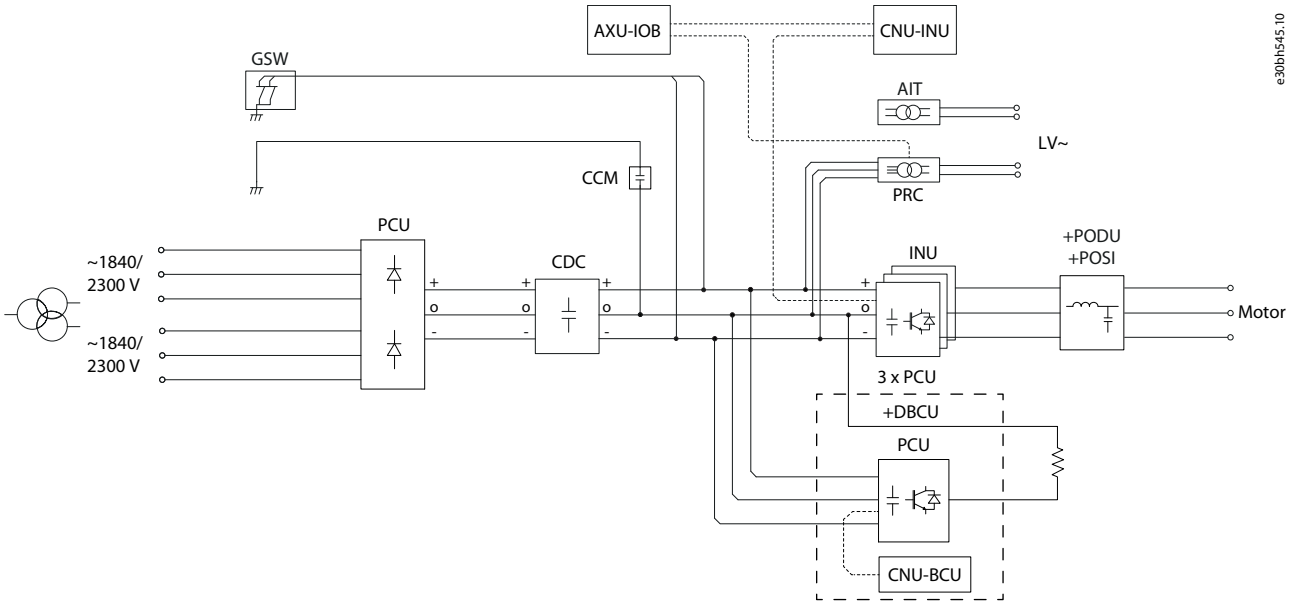

Illustration 89: Main Circuit Diagram for VACON® 3000 12-Pulse, 3.3 kV 425/640 A, and 4.16 kV 340/510 A

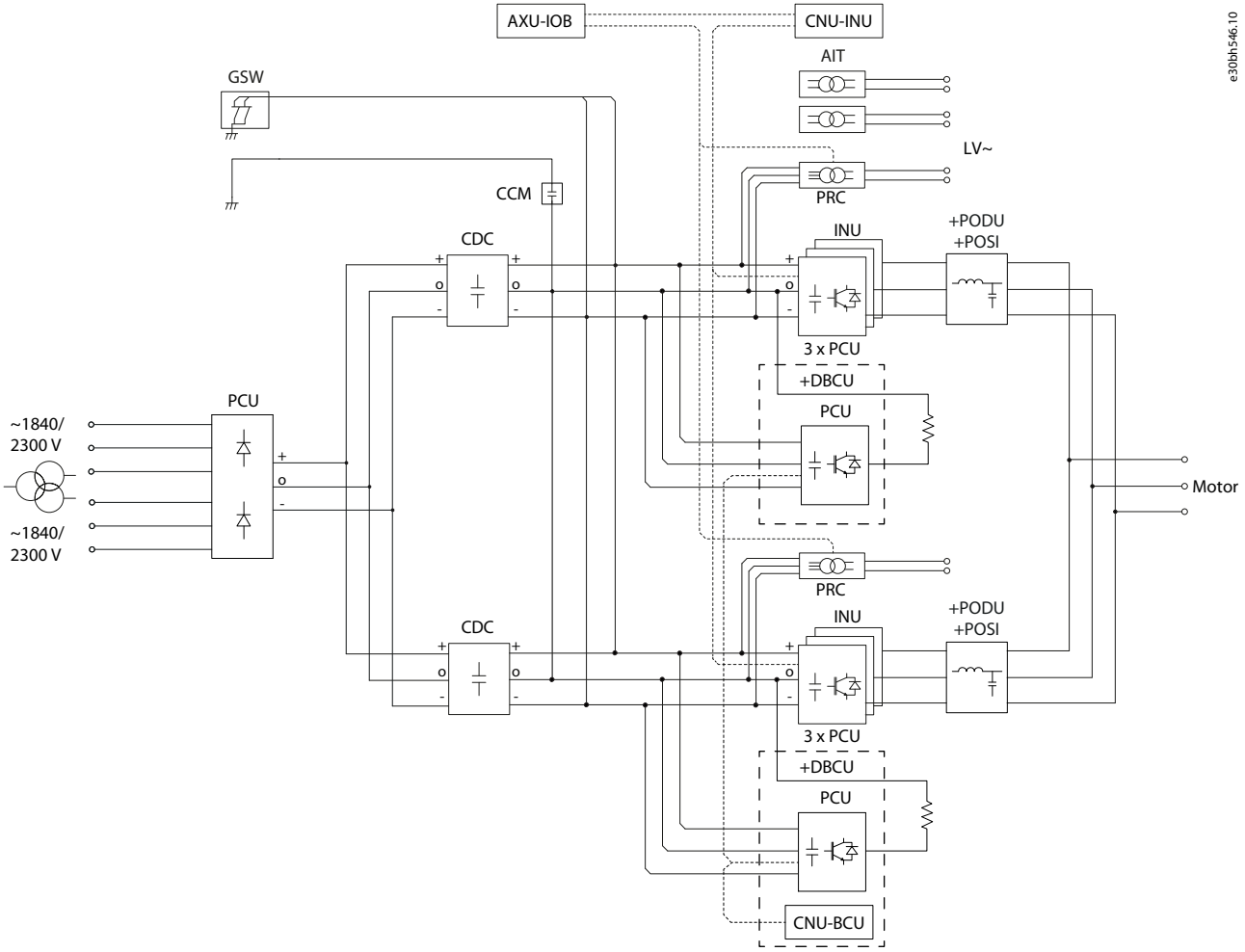

Illustration 90: Main Circuit Diagram for VACON® 3000 12-Pulse, 3.3 kV 820/1230 A, and 4.16 kV 650/980 A

11.4 Abbreviations

4Q	4-quadrant, or regenerative operation
AFE	Active front end
BCU	Brake chopper unit
CCM	Common-mode capacitor
CDC	DC capacitor for DFE
CM	Common mode (voltage)
CNU	Control unit
CSH	Shunt capacitor
DFE	Diode front end, a passive rectifier which uses diodes
EMC	Electromagnetic compatibility
EMI	Electromagnetic interference
GND	Ground
GSW	Grounding switch

HMI	Human machine interface
HSI	High source impedance
HX	Heat exchanger
INU	Inverter unit
IP	Ingress protection, for example, IP00, IP21, or IP54
KPC	Pre-charge contactor
LCM	Common-mode inductor (included in the common-mode filter, option +PICM)
LCV	AFE converter side input inductor
LED	Light emitting diode
LGI	Grid side AFE input inductor (included in the common-mode filter, option +PICM)
LV	Low voltage (< 1000 V AC)
MV	Medium voltage (> 1000 V AC)
MX	Main contactor of the pre-charge unit
OPT	Option board
PCU	Power conversion unit
PE	Protective earth
PLC	Programmable logic controller
PPE	Personal protective equipment
PRC	Pre-charge unit
PTR	Potential transformer
RMS	Root mean square
RTC	Real-time clock
SI	Source impedance
SPD	Surge protection device
SSI	Small source impedance
THD	Total harmonic distortion

Index

1

12-pulse ... 17

A

Abbreviations ... 167
Additional resources ... 9
AFE ... 16
AFE synchronization test ... 101
Air cooling ... 32
Ambient conditions ... 24, 158
Antifreeze ... 27
Auxiliary I/O board
- Connector locations ... 75
- Connector specifications ... 76
- LED display ... 80

B

Brake chopper unit
- Installation ... 45

C

Cable selection
- Mains and motor cables ... 35
- Control cables ... 55
- Optical fiber cables ... 66

Cabling
- Mains and motor cables ... 35
- Additional instructions ... 39
- Low-voltage power supply ... 48
- Fieldbus ... 58

Commissioning
- Safety ... 82

Commissioning test ... 98
Condensation ... 28
Control compartment ... 52
Control properties ... 156
Control unit
- Interface ... 52
- Components ... 53
- Cabling ... 54
- Terminals ... 55
- DIP switches ... 56
- Fieldbus terminals ... 58
- Optical fiber connections ... 63
- Encoder interface ... 68
- Real-time clock ... 73
- Software ... 73
- Signals ... 73

Cooling ... 159
Cooling liquid
- Temperature ... 28

D

DC-link connections ... 43
Dew point ... 29
DFE power module
- Terminals ... 40,45
- Control terminals ... 41
- Grounding ... 42
- LED display ... 47

Dimensions ... 25
Drive properties ... 157

E

Encoder ... 68, 105
Environment ... 24, 158

F

Fault tracing ... 111

G

Galvanic isolation barriers ... 73
Grid voltage feedback configuration ... 92
Grounding ... 38
Grounding configurations ... 38
Grounding switch
- Operation ... 82

H

Heat exchanger ... 110
High overload ... 155

I

Installation ... 24
Insulation checks
- Switchgear ... 106

Intended use ... 16

L

Leakage current ... 12
Lifting instructions ... 21
Liquid cooling
- General information ... 26
- Materials ... 30
- Cooling system ... 31
- Connections ... 31
- Commissioning ... 88

Low overload ... 155
Low-voltage power supply ... 48
Low-voltage section ... 34

M

Main circuit breaker ... 14, 40
Main circuit diagrams
- AFE ... 164
- 12-pulse ... 166

Mains supply ... 155
Maintenance ... 108
Manual version ... 9
Medium-voltage section ... 34
Motor output ... 156
Moving instructions ... 21

O

Option boards ... 20, 62
Options ... 18
Overload capability ... 155

P

Phase module (L20/L30)
- Terminals....40,45
- Grounding....42
- LED display....45

Phasing....97
Power ratings
- 3300 V....154
- 4160 V....154

Precharge unit
- Safety....49

Purified water....27

Q

Qualified personnel....9, 10

R

Real-time clock....73

S

Safe Stop 1
- Operating principle....51

Safe torque off
- Safety considerations....50
- Diagnostic test....50
- Operating principle....51

Safety....10, 12
Safety functions....49
Software installation....94
Source impedance....160
SS1....50
STO....50
Storage....21
Symbols....10

T

Type code....17

ENGINEERING
TOMORROW

Vacon Ltd, Member of the
Danfoss Group
Runsorintie 7
FIN-65380 Vaasa
www.danfoss.com

Danfoss can accept no responsibility for possible errors in catalogs, brochures and other printed material. Danfoss reserves the right to alter its products without notice. This also applies to products already on order provided that such alterations can be made without subsequential changes being necessary in specifications already agreed. All trademarks in this material are property of the respective companies. Danfoss and the Danfoss logotype are trademarks of Danfoss A/S. All rights reserved.

DPD02033

Danfoss A/S © 2021.09

DPD02033A

AQ286660579921en-000101 / DPD02033