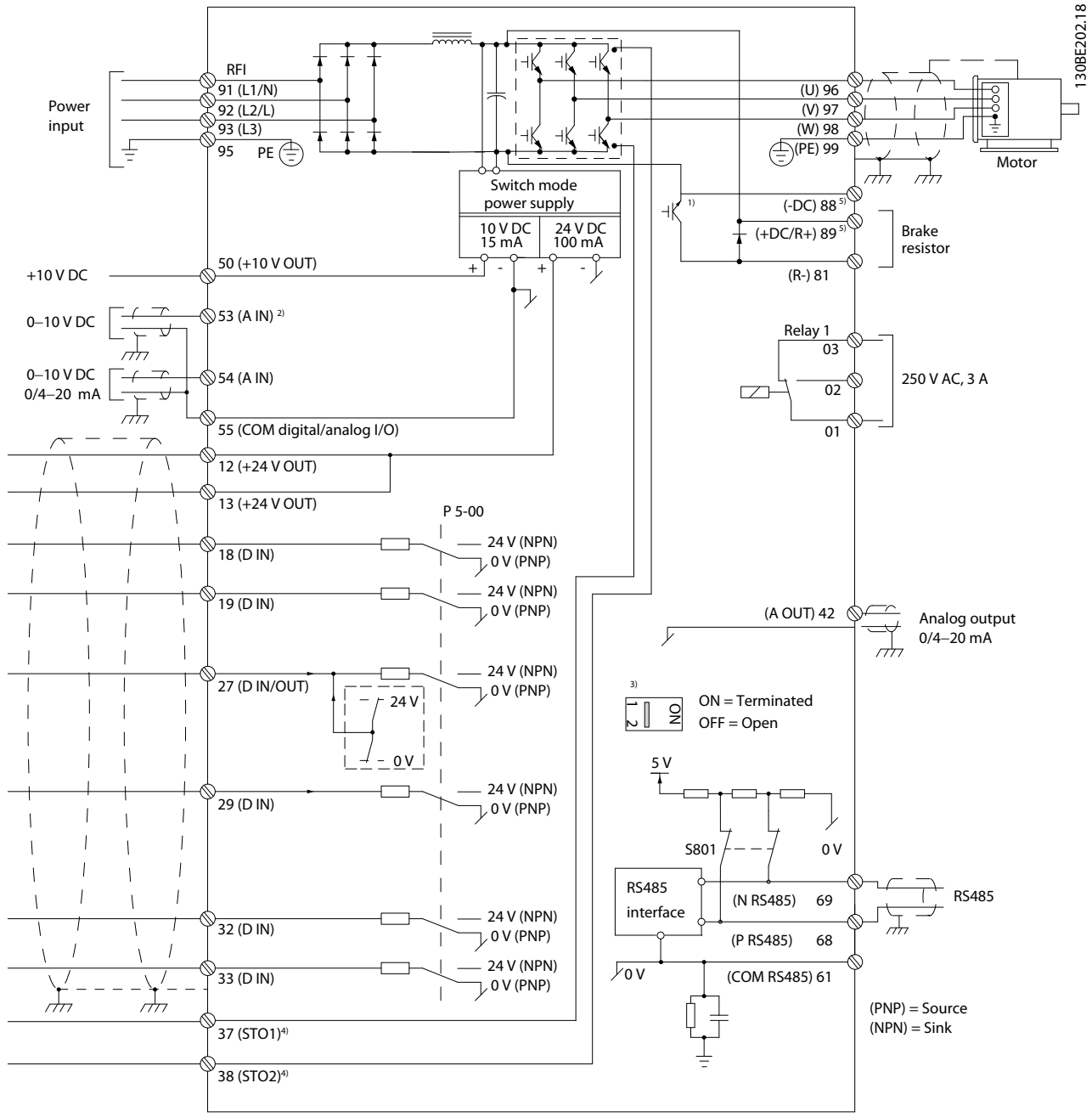
130BE202.18
Power input
RFI
91 (L1/N)
92 (L2/L)
93 (L3)
95 PE
(U) 96
(V) 97
(W) 98
(PE) 99
Motor
Switch mode power supply
10 V DC 15 mA
24 V DC 100 mA
1)
(-DC) 88 5)
(+DC/R+) 89 5)
(R-) 81
Brake resistor
+10 V DC
50 (+10 V OUT)
0–10 V DC
53 (A IN) 2)
0–10 V DC
0/4–20 mA
54 (A IN)
55 (COM digital/analog I/O)
Relay 1
03
02
01
250 V AC, 3 A
12 (+24 V OUT)
13 (+24 V OUT)
P 5-00
18 (D IN)
19 (D IN)
24 V (NPN)
0 V (PNP)
(A OUT) 42
Analog output
0/4–20 mA
27 (D IN/OUT)
24 V
0 V
3)
ON
1 2
ON = Terminated
OFF = Open
29 (D IN)
5 V
S801
0 V
RS485 interface
(N RS485) 69
(P RS485) 68
(COM RS485) 61
RS485
32 (D IN)
33 (D IN)
37 (STO1)4)
38 (STO2)4)
(PNP) = Source
(NPN) = Sink