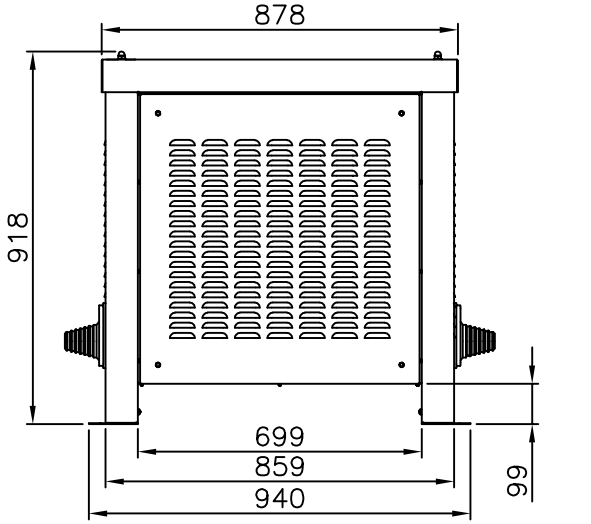

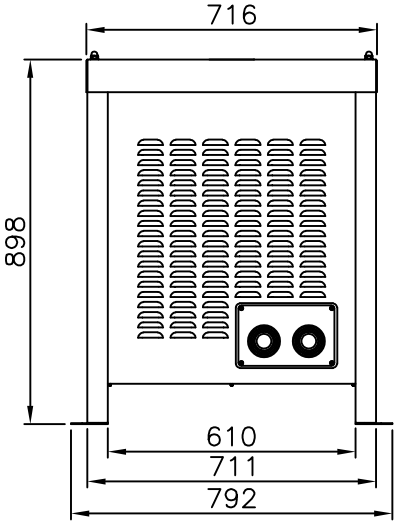

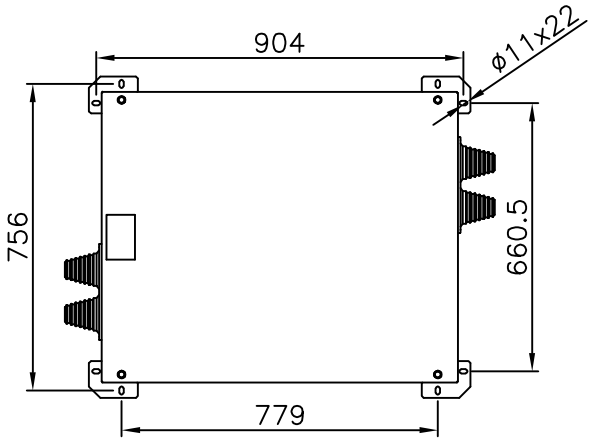

additional informations:

filter colour : RAL5008 / R9006

filter weight : 182kg

label:

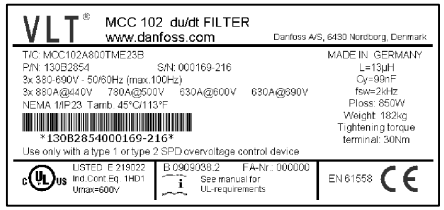

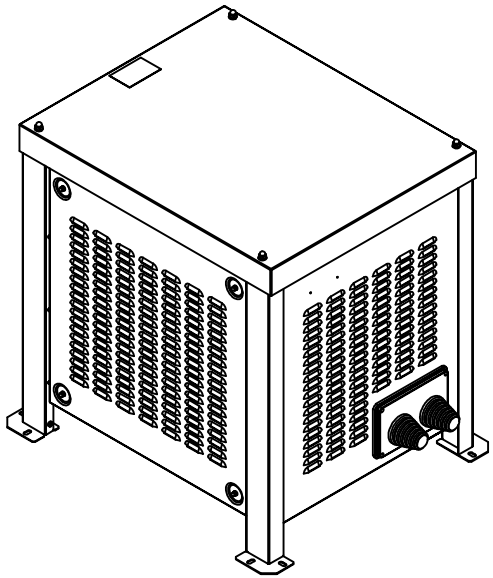

e	23.05.16	Schr./Fle.	typelabel updated, Danfoss Postaddress included
d	12.01.15	Schr./Fle.	typelabel updated
c	25.03.13	Schr./Kor.	typelabel updated
b	30.09.10	KOR/BRE	approval added
a	13.01.10	KOR/BRE	part-no. added
	date	name	amendment

Dimensions toleranced according to ISO 2768-m						
Tolerance class	0.5 to 3	from 3 to 6	from 6 to 30	from 30 to 120	from 120 to 400	from 400 to 1000
m (middle)	±0.1	±0.1	±0.2	±0.3	±0.5	±0.8

drawn	18.11.09	Kornau	Kornau	scale 1:15
checked	18.11.09	Bremer	Bremer	formate A4
	date	name	signature	

DIN ISO 5456

all dimensions mm

Dimensions B 0909038.2
du/dt filter 780A – IP23

order number	drawing number	modi.	sheet
130B2854	Z790911025	e	1/1

Please observe protection clause to ISO 16016