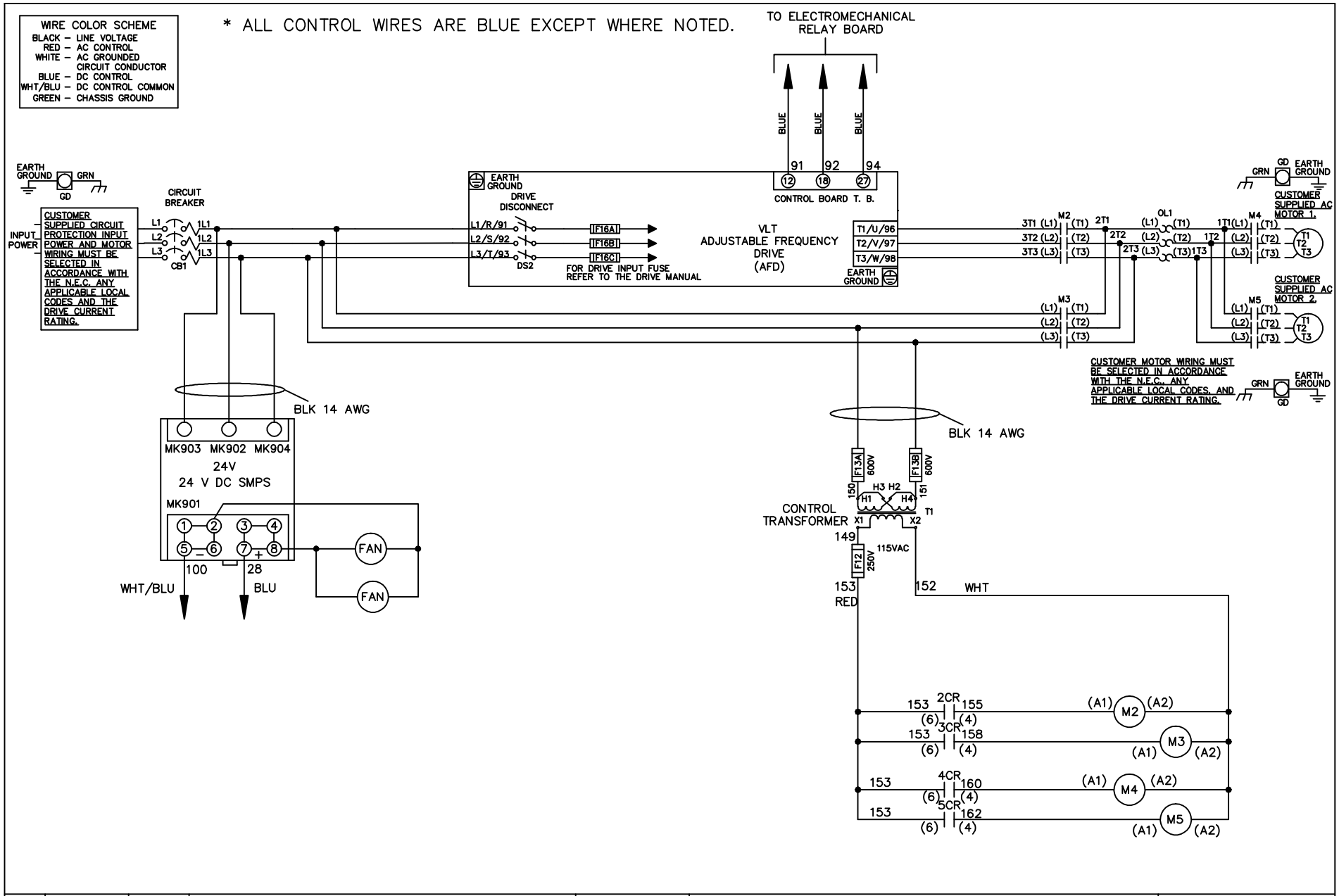

			–NOTICE– THIS DRAWING IS PROPRIETARY AND SHALL NOT BE COPIED OR ITS CONTENTS DISCLOSED TO OUTSIDE PARTIES WITHOUT THE WRITTEN CONSENT OF THE TRANE COMPANY	DRN JNW 2/14/07	NAME230 VOLT,2C,CB & DRIVE DISC ,DRIVE FUSE,EMB1,FRAME C2N12 ,NO REACTOR & DVDT,CMS		THE TRANE COMPANY A DIVISION OF AMERICAN STANDARD INC.
A	SP08061	10/08		APR	MODEL	PAGE 1 OF 2	SIZE A	DWG NO. 174U6744
REV	ECN	DATE					

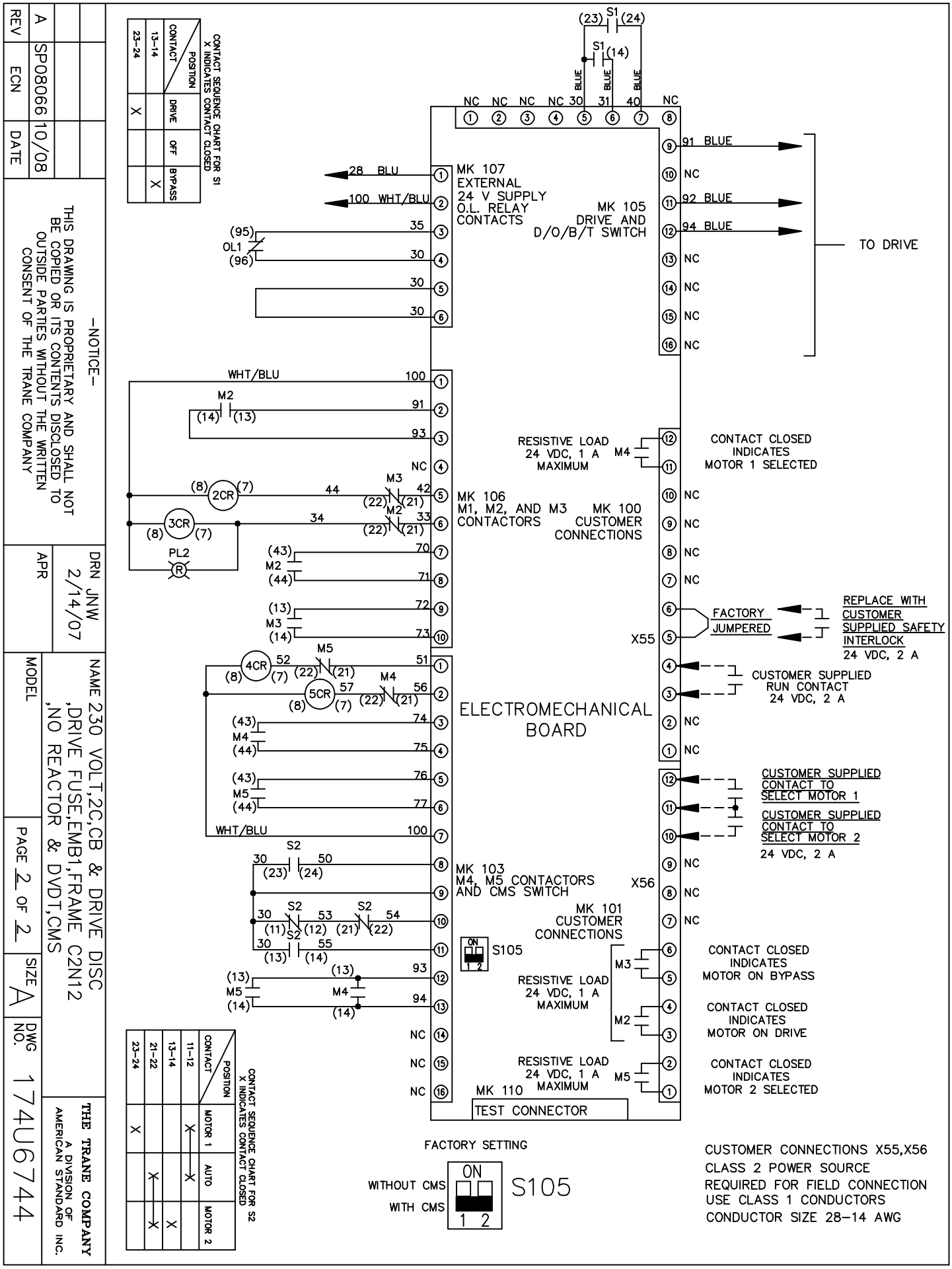

REV	ECN	DATE
A	SP08066	10/08

-NOTICE-

THIS DRAWING IS PROPRIETARY AND SHALL NOT BE COPIED OR ITS CONTENTS DISCLOSED TO OUTSIDE PARTIES WITHOUT THE WRITTEN CONSENT OF THE TRANE COMPANY

DRN JNW 2/14/07

APR

NAME 230 VOLT,2C,CB & DRIVE DISC ,DRIVE FUSE,EMB1,FRAME C2N12 ,NO REACTOR & DVDT,CMS

MODEL

PAGE 2 OF 2

SIZE A

DWG NO. 174U6744

THE TRANE COMPANY
A DIVISION OF AMERICAN STANDARD INC.