WIRE COLOR SCHEME
BLACK – LINE VOLTAGE
RED – AC CONTROL
WHITE – AC GROUNDED CIRCUIT CONDUCTOR
BLUE – DC CONTROL
WHT/BLU – DC CONTROL COMMON
GREEN – CHASSIS GROUND

* ALL CONTROL WIRES ARE BLUE EXCEPT WHERE NOTED.

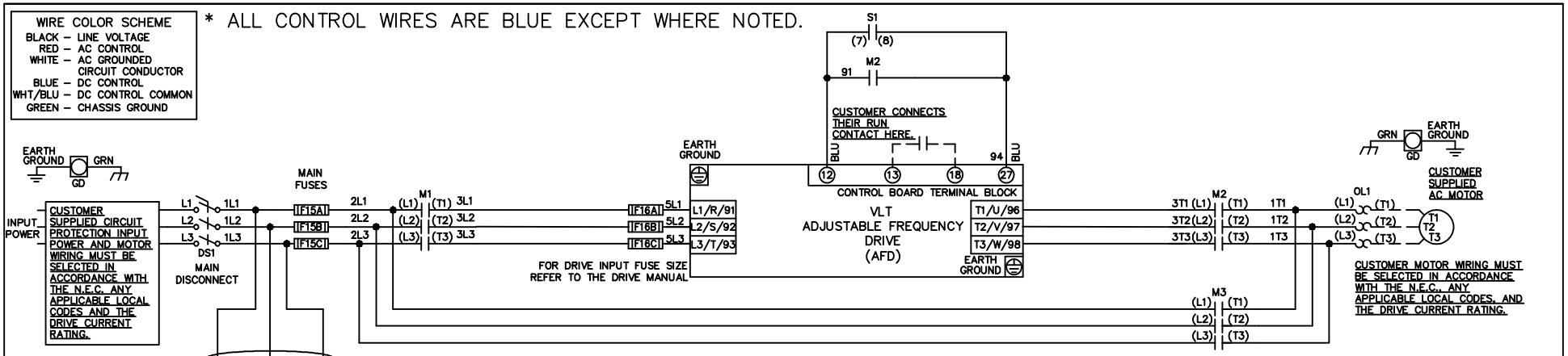

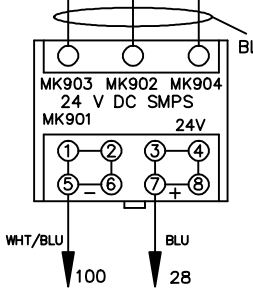

CONTACT SEQUENCE CHART FOR S1
X INDICATES CONTACT CLOSED

CONTACT \ POSITION	DRIVE	OFF	BYPASS	TEST
1–2	X			X
3–4			X	X
5–6	X			
7–8				X

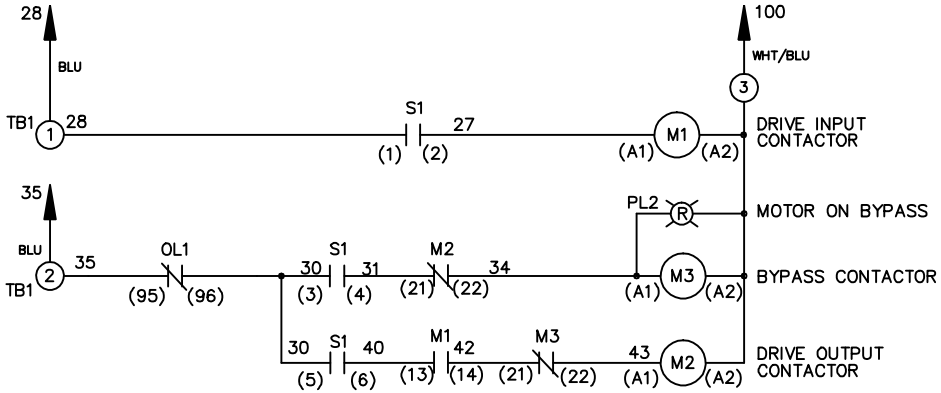

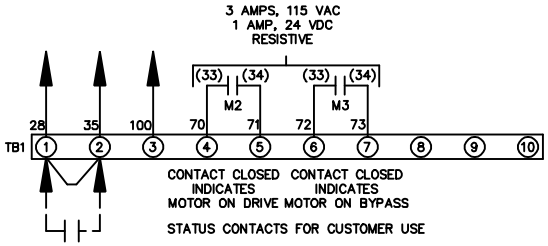

WARNING DO NOT CONNECT ANY EXTERNAL DEVICES TO 28, 35, AND 100

REV	ECN	DATE
A	SP08061	10/08

–NOTICE–

THIS DRAWING IS PROPRIETARY AND SHALL NOT BE COPIED OR ITS CONTENTS DISCLOSED TO OUTSIDE PARTIES WITHOUT THE WRITTEN CONSENT OF THE TRANE COMPANY

DRN JNW 2/14/07
APR

NAME 208–600VOLT,3C,MAIN DISC ,MAIN FUSE,EMB,FRAME A2–A3 ,NO REACTOR & DVDT,SINGLE MTR

MODEL

PAGE 1 OF 1

SIZE A

DWG NO. 174U7854

THE TRANE COMPANY
A DIVISION OF AMERICAN STANDARD INC.