* ALL CONTROL WIRES ARE BLUE EXCEPT WHERE NOTED.

WIRE COLOR SCHEME
BLACK – LINE VOLTAGE
RED – AC CONTROL
WHITE – AC GROUNDED CIRCUIT CONDUCTOR
BLUE – DC CONTROL
WHT/BLU – DC CONTROL COMMON
GREEN – CHASSIS GROUND

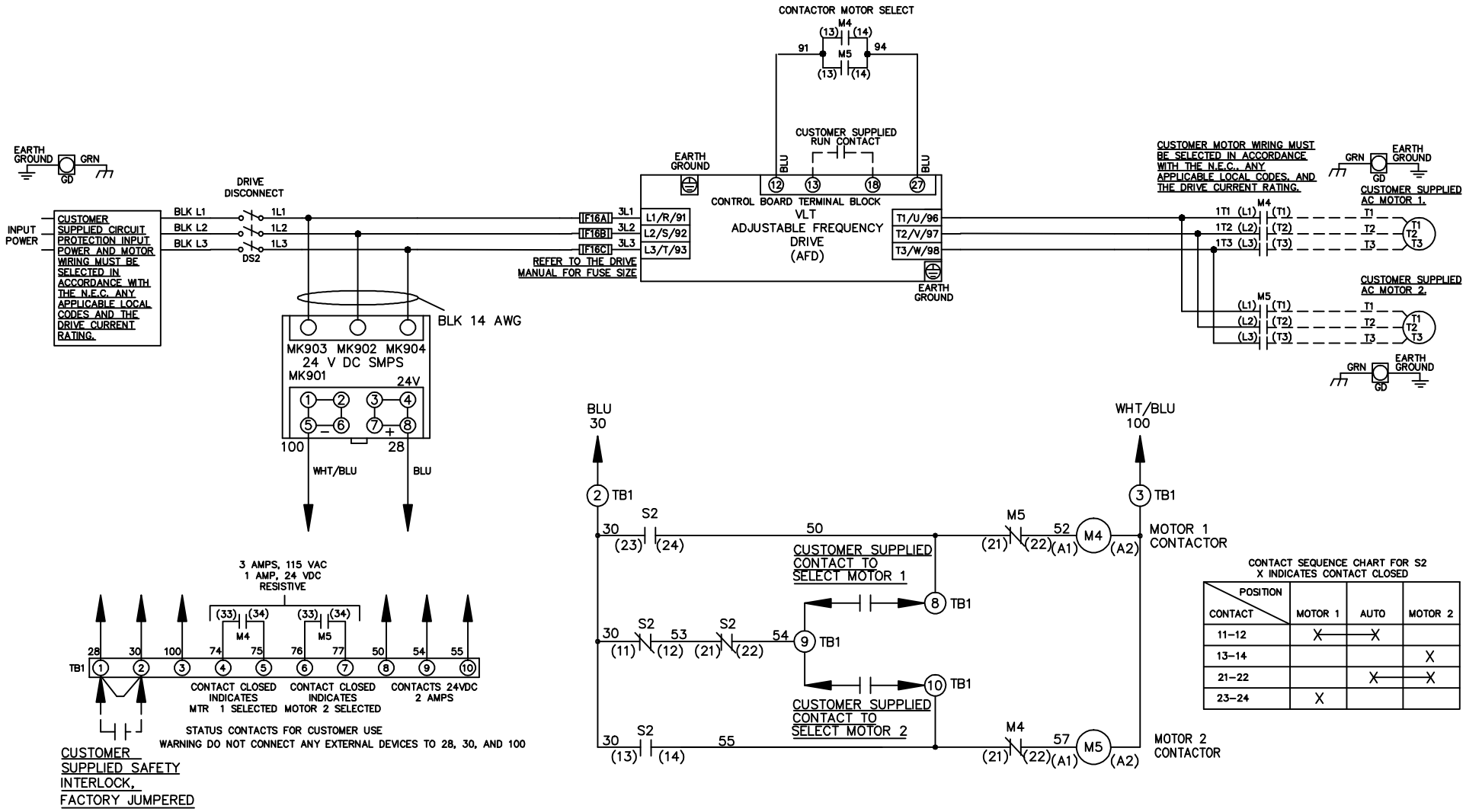

CONTACT SEQUENCE CHART FOR S2
X INDICATES CONTACT CLOSED

CONTACT \ POSITION	MOTOR 1	AUTO	MOTOR 2
11–12	X	X	
13–14			X
21–22		X	X
23–24	X		

REV	ECN	DATE
A	SP08061	10/08

–NOTICE–

THIS DRAWING IS PROPRIETARY AND SHALL NOT BE COPIED OR ITS CONTENTS DISCLOSED TO OUTSIDE PARTIES WITHOUT THE WRITTEN CONSENT OF THE TRANE COMPANY

DRN JNW 2/14/07
APR

NAME 208–600VOLT,NB,DRIVE DISC ,DRIVE FUSE,NO CNTRL,FRAME A2–A3 ,NO REACTOR & DVDT,CMS

MODEL

PAGE 1 OF 1

SIZE A

DWG NO. 174U8886

THE TRANE COMPANY
A DIVISION OF AMERICAN STANDARD INC.