WIRE COLOR SCHEME
BLACK – LINE VOLTAGE
RED – AC CONTROL
WHITE – AC GROUNDED CIRCUIT CONDUCTOR
BLUE – DC CONTROL
WHT/BLU – DC CONTROL COMMON
GREEN – CHASSIS GROUND

* ALL CONTROL WIRES ARE BLUE EXCEPT WHERE NOTED.

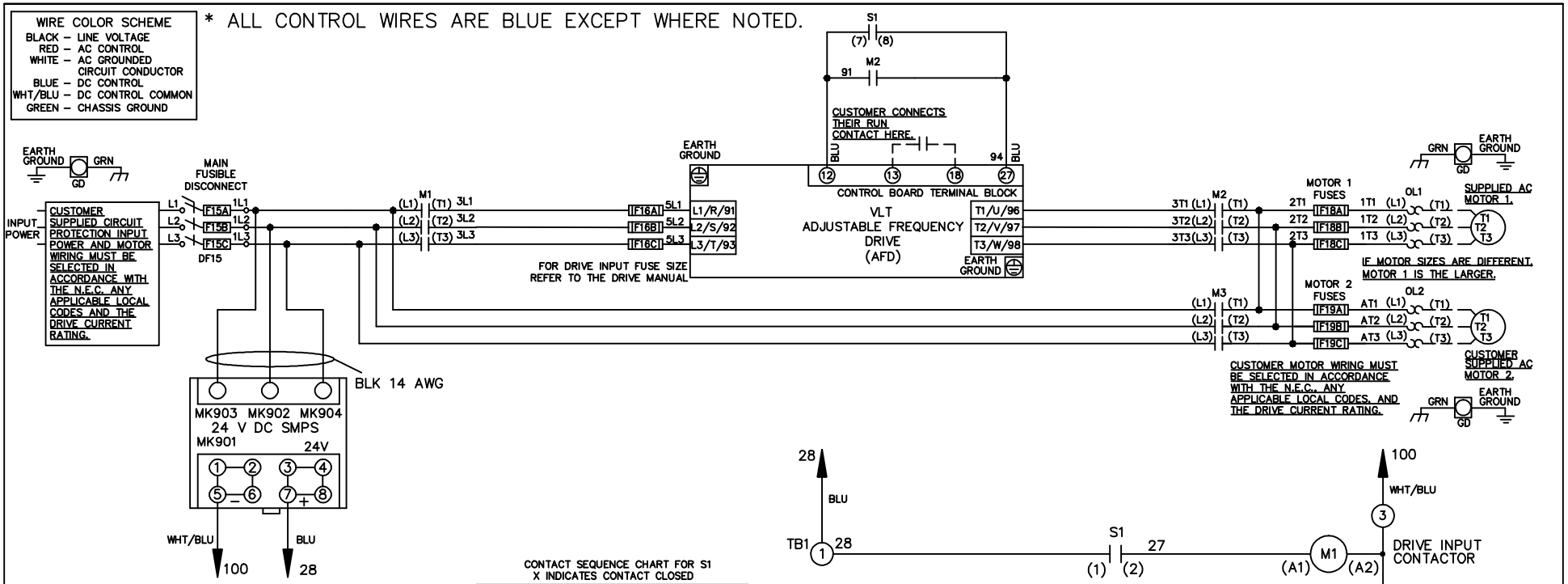

CONTACT SEQUENCE CHART FOR S1
X INDICATES CONTACT CLOSED

CONTACT \ POSITION	DRIVE	OFF	BYPASS	TEST
1–2	X			X
3–4			X	X
5–6	X			
7–8				X

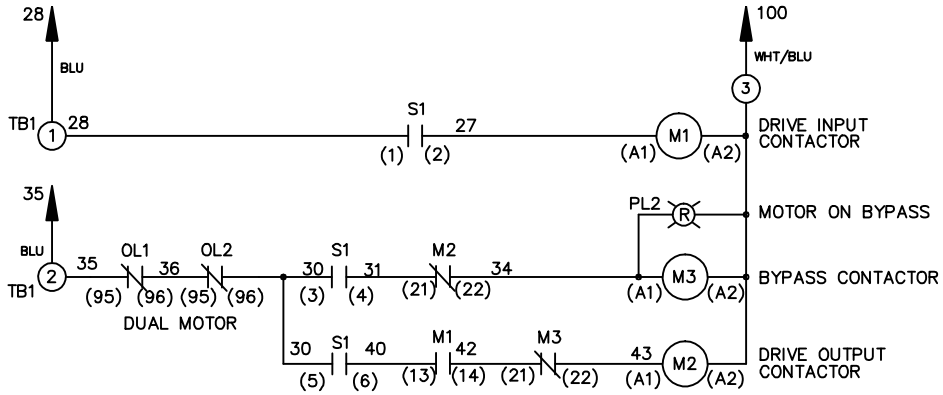

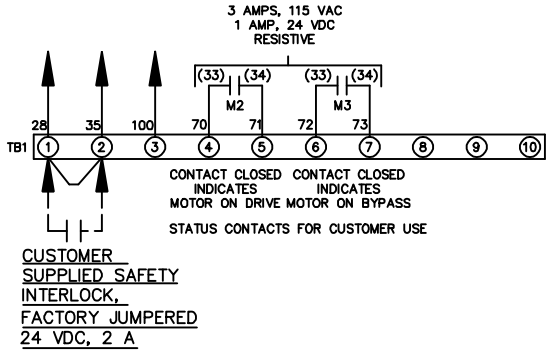

WARNING DO NOT CONNECT ANY EXTERNAL DEVICES TO 28, 35, AND 100

REV	ECN	DATE
A	SP08061	10/08

– NOTICE –
THIS DOCUMENT CONTAINS PROPRIETARY INFORMATION OF DANFOSS DRIVES. IT IS LOANED BY DANFOSS DRIVES SUBJECT TO THE CONDITIONS THAT IT AND THE INFORMATION EMBODIED THEREIN SHALL BE USED ONLY FOR RECORD AND REFERENCE PURPOSES, SHALL NOT BE USED OR CAUSED TO BE USED IN ANY WAY PREJUDICIAL TO THE INTERESTS OF DANFOSS DRIVES, SHALL NOT BE REPRODUCED OR COPIED IN WHOLE OR IN PART, OR DISCLOSED TO ANYONE WITHOUT THE DIRECT WRITTEN PERMISSION OF DANFOSS DRIVES AND SHALL BE RETURNED UPON REQUEST.

DRN JNW 2/14/07
APR

NAME 208–600VOLT,3C,MAIN DISC FUSIBLE,EMB,FRAME A2–A3 ,NO REACTOR & DVDT,DUAL MTR

MODEL | PAGE 1 OF 1 | SIZE A | DWG NO. 174U9048