WIRE COLOR SCHEME
BLACK – LINE VOLTAGE
RED – AC CONTROL
WHITE – AC GROUNDED CIRCUIT CONDUCTOR
BLUE – DC CONTROL
WHT/BLU – DC CONTROL COMMON
GREEN – CHASSIS GROUND

* ALL CONTROL WIRES ARE BLUE EXCEPT WHERE NOTED.

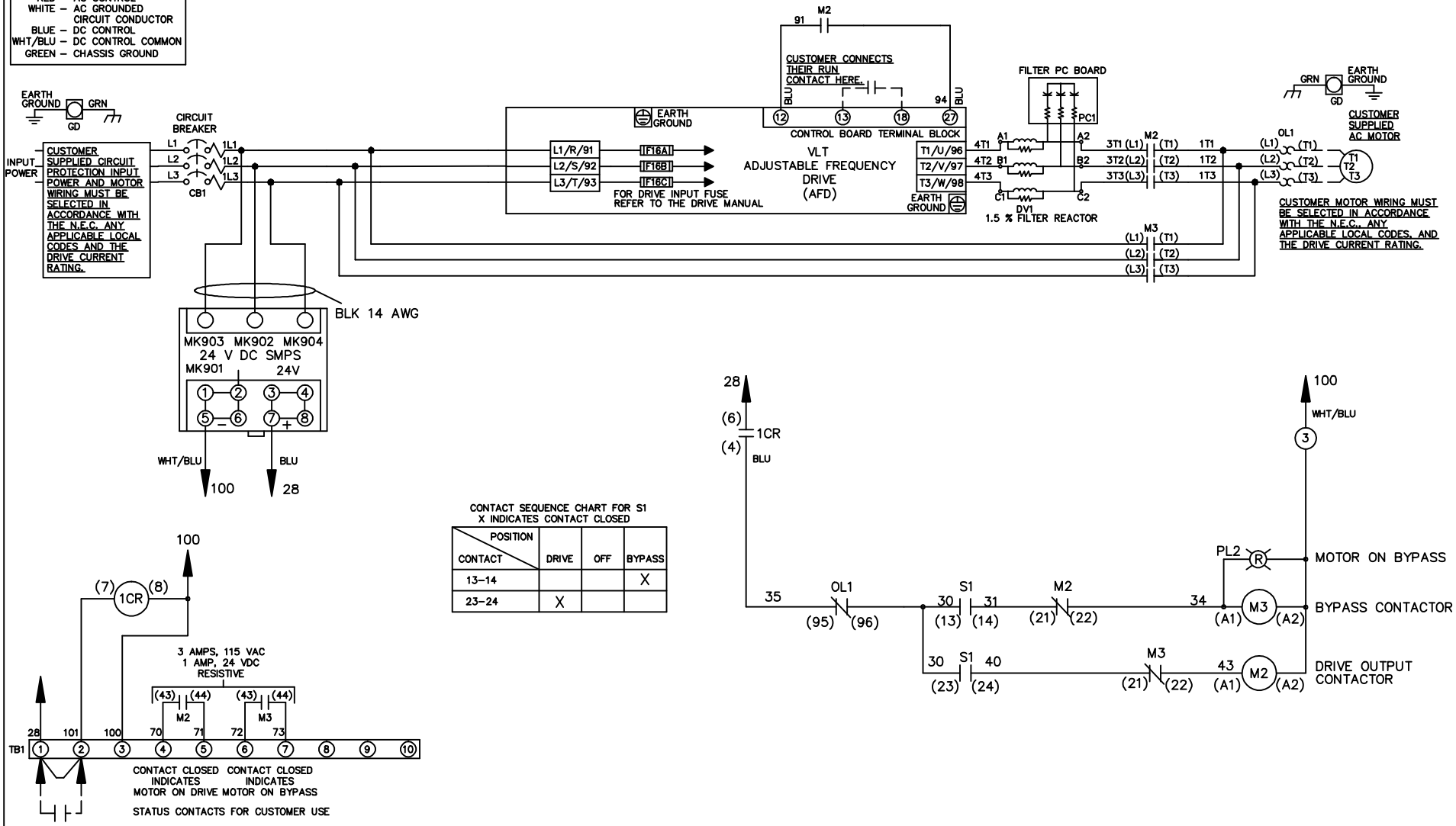

CONTACT SEQUENCE CHART FOR S1
X INDICATES CONTACT CLOSED

POSITION / CONTACT	DRIVE	OFF	BYPASS
13–14			X
23–24	X		

WARNING DO NOT CONNECT ANY EXTERNAL DEVICES TO 28, 101, AND 100

A	SP08061	10/08
REV	ECN	DATE

–NOTICE–

THIS DRAWING IS PROPRIETARY AND SHALL NOT BE COPIED OR ITS CONTENTS DISCLOSED TO OUTSIDE PARTIES WITHOUT THE WRITTEN CONSENT OF THE TRANE COMPANY

DRN JNW
2/14/07
APR

NAME 208–600VOLT,2C,CB ,DRIVE FUSE,EMB,FRAME B2–C1 ,DVDT,SINGLE MTR

MODEL

PAGE 1 OF 1

SIZE A

DWG NO. 174U9775

THE TRANE COMPANY
A DIVISION OF AMERICAN STANDARD INC.