WIRE COLOR SCHEME
BLACK – LINE VOLTAGE
RED – AC CONTROL
WHITE – AC GROUNDED CIRCUIT CONDUCTOR
BLUE – DC CONTROL
GREEN – CHASSIS GROUND

TERMINAL IDENTIFCATION
[X] – DRIVE TERMINAL
(X) – CUSTOMER TERMINAL

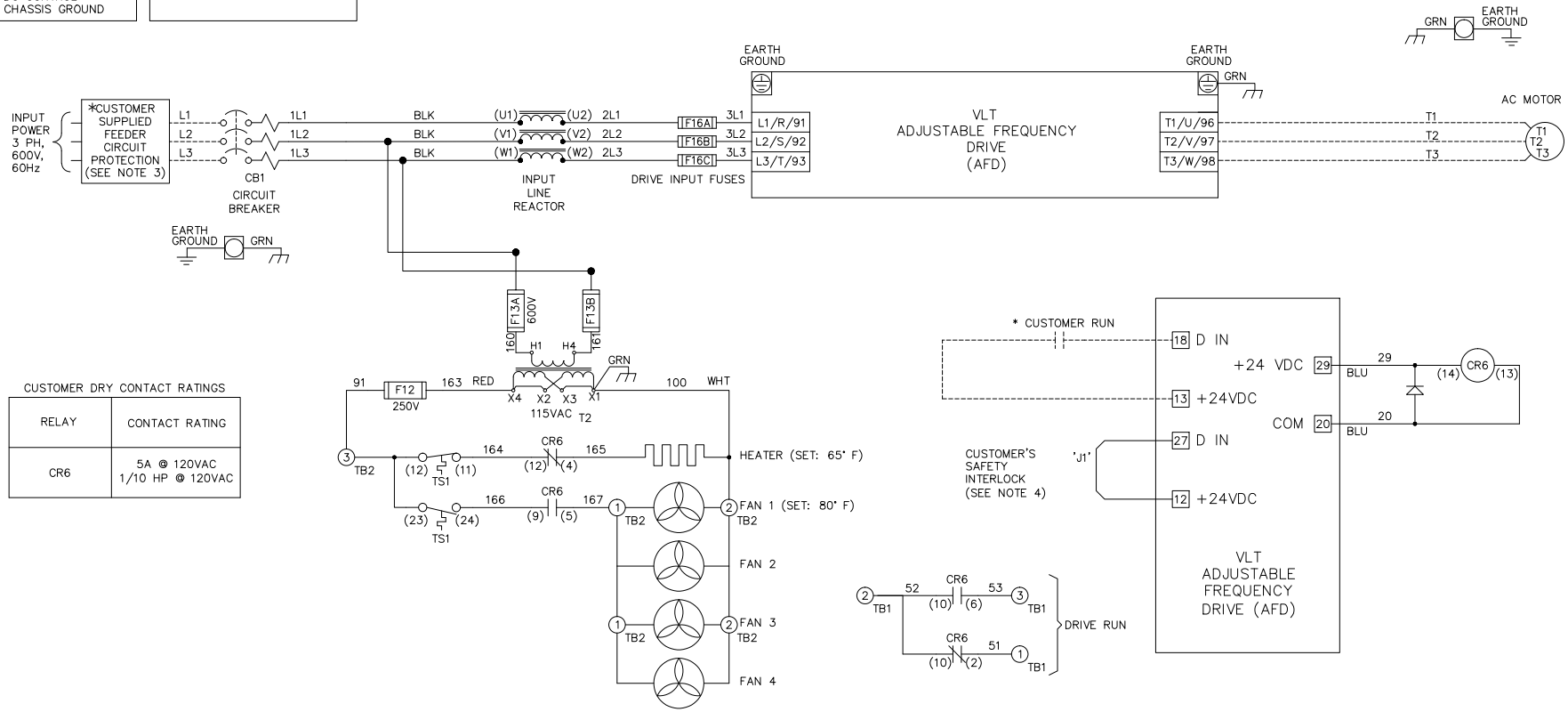

CUSTOMER DRY CONTACT RATINGS

RELAY	CONTACT RATING
CR6	5A @ 120VAC 1/10 HP @ 120VAC

WARNING!
THE FOLLOWING TABLE LISTS THE PARAMETERS THAT ARE SET DIFFERENT FROM THE DRIVE DEFAULT SETTINGS. ADDITIONAL PARAMETER SETTINGS MAY BE REQUIRED FOR YOUR APPLICATION.

NOTES:
1. * INDICATES COMPONENTS NOT SUPPLIED BY MANUFACTURER.
2. REFER TO THE INSTALLATION AND OPERATION MANUAL FOR DRIVE FUNCTIONS AND PARAMETER SETTINGS.
3. FEEDER CIRCUIT PROTECTION, INPUT POWER AND MOTOR WIRING MUST BE SELECTED IN ACCORDANCE WITH THE N.E.C., ANY APPLICATION LOCAL CODES AND THE LOAD CURRENT RATING.
4. REPLACE JUMPER 'J1' WITH NORMALLY CLOSED SAFETY INTERLOCK CONTACT AS NECESSARY.
5. PANEL MAY REQUIRE DERATING, CONSULT DRIVE MANUAL OR FACTORY FOR FOLLOWING CONDITIONS:
   5.1. HIGHER SWITCHING FREQUENCY THAN DRIVE DEFAULT
   5.2. HIGHER THAN PANEL LISTED AMBIENT TEMPERATURES
   5.3. ELEVATION ABOVE 3300 FEET (1000 METERS)
   5.4. LONG MOTOR LEAD LENGTHS

DRIVE PARAMETER SETTINGS

PARAMETER #	NAME	SETTING	VALUE
0–02	MOTOR SPEED UNIT	1	HZ
0–03	REGIONAL SETTINGS	1	NORTH AMERICA
1–03	TORQUE CHAR.	3	AUTO ENERGY OPTIM VT
5–02	TERMINAL 29 TYPE	1	OUTPUT
5–31	TERMINAL 29	5	RUNNING
14–20	RESET MODE	13	INFINITE AUTO REST

B			–NOTICE–	DRN DTM	NAME NEMA 3R,600V,NB ,MAIN CB ,DRIVE FUSE ,IR,SINGLE MOTOR,4 FAN	THE TRANE COMPANY A DIVISION OF AMERICAN STANDARD INC.
A	SP10119	11/10	THIS DRAWING IS PROPRIETARY AND SHALL NOT BE COPIED OR ITS CONTENTS DISCLOSED TO OUTSIDE PARTIES WITHOUT THE WRITTEN CONSENT OF THE TRANE COMPANY			
DR	SP10076	09/10		APR DTM	MODEL TR200	PAGE 1 OF 1 SIZE A DWG NO. 185B4629
REV	ECN	DATE				