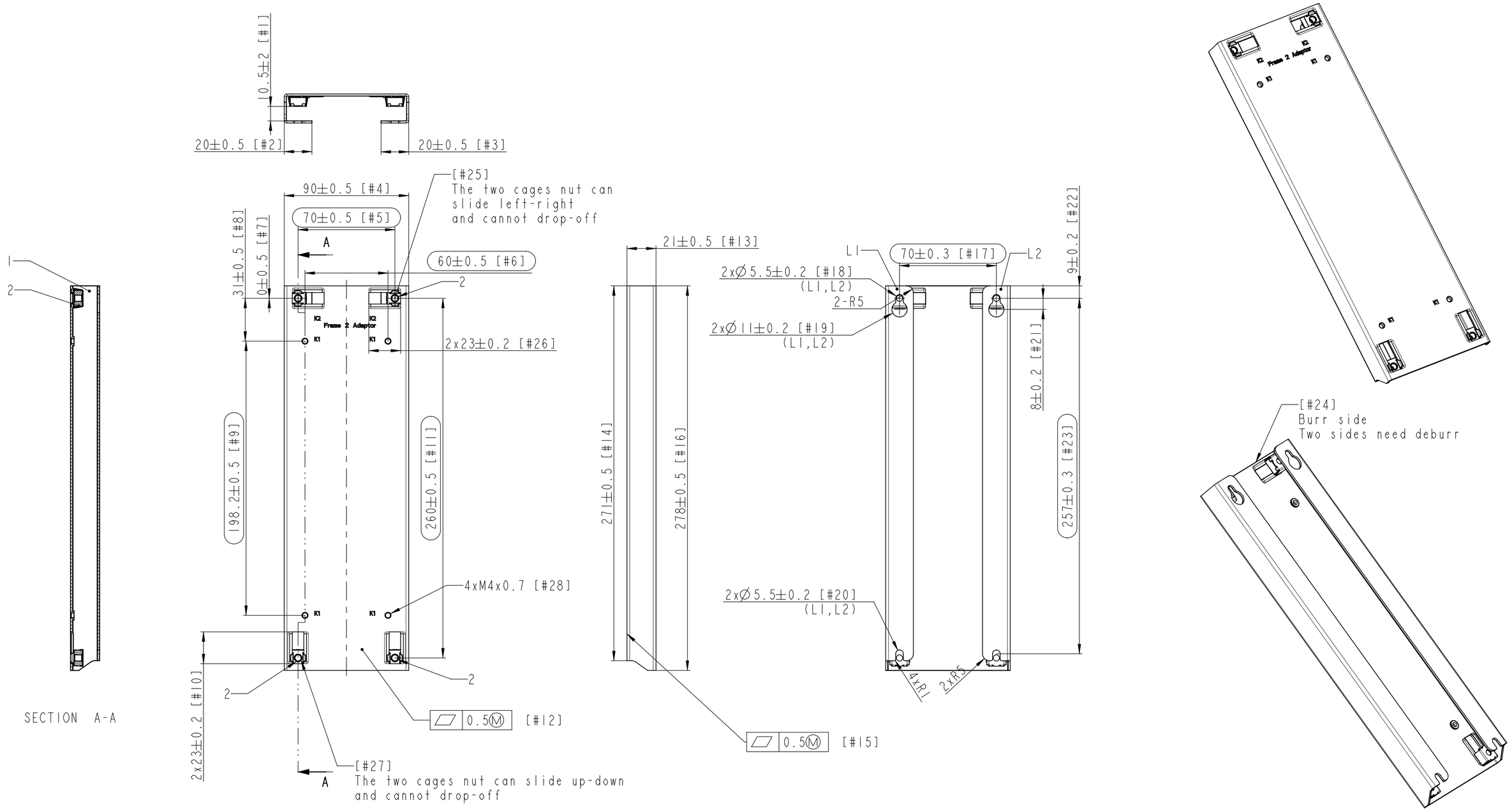

Note:
1) Inspection dimensions: #5,6,9,11,17,23
2) General inner bending radius : 0.5 mm
3) Tolerances for not specified dimensions: ±0.25
4) Corner rounds not specified: R0.5±0.2
5) Part must be washed and degreased
6) No impact marks acceptable
7) Scratches to be avoived on visible surfaces
8) Material specification:
   1.5 mm Sheet acc. to EN 10346 DX51D AZ150-N-A-C
9) Not specified dimensions according to unfolded part
10) Part must compliance with RoHS Directive 2011/65/EU
11) Sheet metal plate VOLUME = 66228MM^3

	Item	Quantity	Description
1	Metal Plate	1	1.5 mm Sheet acc. to EN 10346 DX51D AZ150-N-A-C
2	M5 Cage Nut	4	Bossard BN3307 Article-No. - 1538284

PDM controlled drawing.
Hard copy not valid without
frozen date in ID Stamp

Projection

Scale 1:2

Size A2

Material See Note

Replace

Designer Thor T. C. 2018-01-16

Danfoss

Designation \ Name

FC280 to VLT2800 Mounting Adaptor 2

Confidential: Property of Danfoss Power Electronics A/S, Graasten, Denmark. Not to be handed over to, copied or used by third party. Two- or three dimensional reproduction of contents to be authorized by Danfoss Power Electronics A/S.

No. 132B3773

Rev. 003

Sheet 1 of 1

Model: K2_ADAPTOR_ASSEM