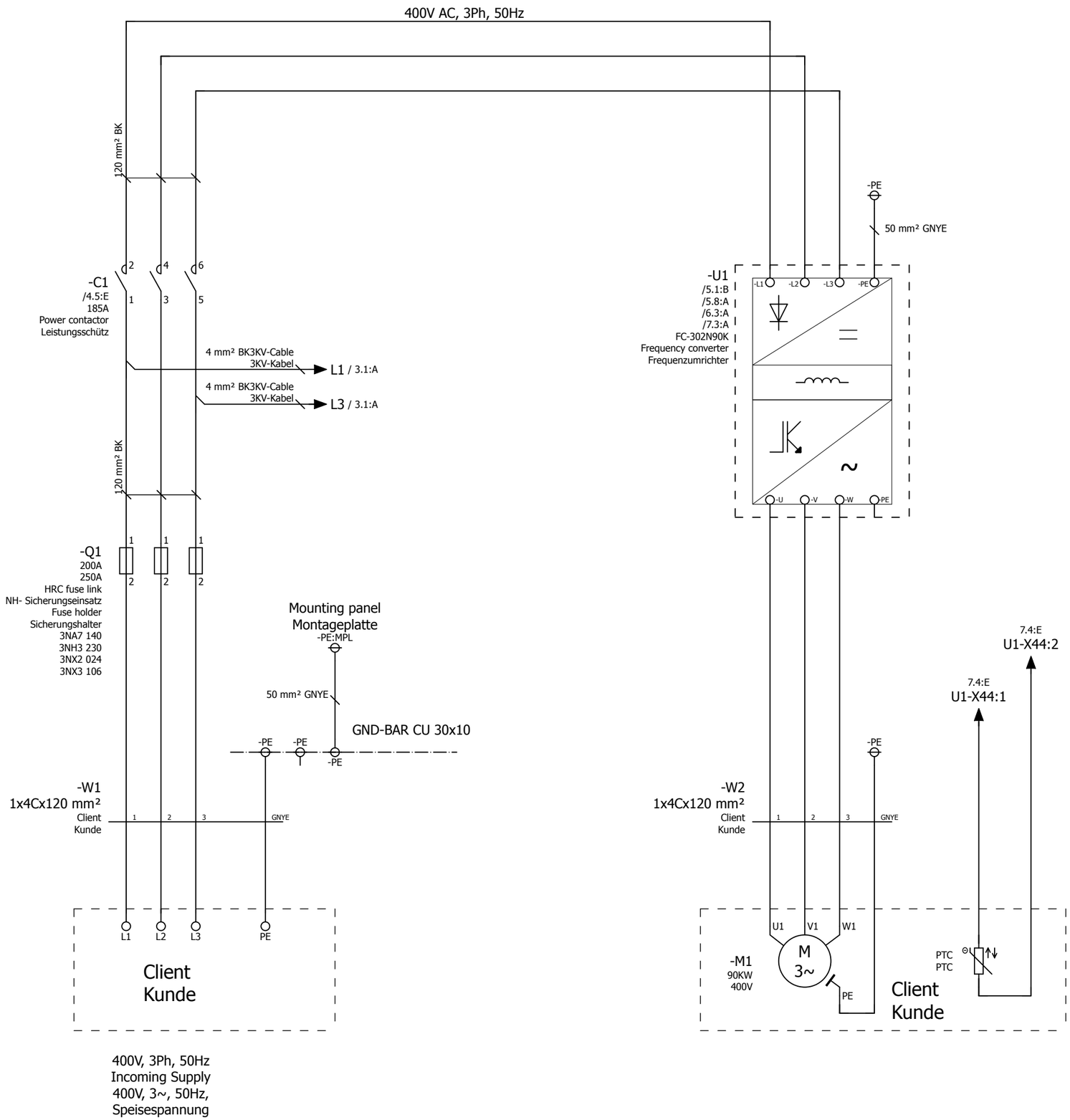


1

3

| | | | | | | | | | | |
|---|---|---|---|---|---|---|---|---|---|---|
| | | | Date | 9/30/2013 | Commission<br>90KW VFD Panel<br>Project description<br>Contactor+Fuse<br>Schütz+Fuse | Danfoss GmbH<br>VLT Drives EMA,Carl-Legien Strasse 8<br>63073 Offenbach, Germany | FILE-NAME:<br>LOGOB300.jpg<br>Size 300px x 116px | Page description<br>Schematic multi-line<br>Schaltplan allpolig | Project Number<br>MC_-____-___<br>SAP NO | = FC302<br>+ N90KW 230V<br>Manufacturer no | Page<br>2 |
| | | | Ed. | RAMKUMAR | | | | | | | |
| | | | Appr | FALKO | | | | | | | |
| Modification | Date | Name | Contr. | KARTHIK | | | | | | | Page 32 |