VACON® 100 X
AC DRIVES

Installation, Technical and Maintenance Manual

VACON®
DRIVEN BY DRIVES

INDEX

Document code (Original Instructions): DPD00534H
Order code: DOC-INS03985+DLUK
Rev. H
Revision release date: 10.7.15

1. Safety 4
1.1 Signs 4
1.2 Units 4
1.3 Danger 5
1.4 Warnings 6
1.5 Earthing and earth fault protection 7
1.6 Insulation system 10
1.7 Compatibility with RCDs 11
1.8 Extended temperature range 11
1.9 Electro-magnetic compatibility (EMC) 11
1.10 Declaration of conformity 12
2. Receipt of delivery 16
2.1 Type designation code 17
2.2 order codes 18
2.3 Unpacking and lifting the AC drive 19
2.4 Accessories 19
2.4.1 Frame MM4 19
2.4.2 Frame MM5 20
2.4.3 Frame MM6 20
2.4.4 STO terminal connector 21
2.4.5 'Product modified' sticker 21
2.4.6 Disposal 21
3. Mounting 22
3.1 Dimensions mm4 22
3.2 Dimensions mm5 23
3.3 Dimensions mm6 24
3.4 Introduction of modules 25
3.5 Mounting 26
3.5.1 Wall-mounting 27
3.5.2 Motor-mounting 27
3.5.3 Segregated modules 27
3.6 Cooling 28
4. Power cabling 30
4.1 Circuit breaker 32
4.2 UL standards on cabling 32
4.3 Description of the terminals 33
4.4 Cable dimensioning and selection 36
4.4.1 Cable and fuse sizes, frames MM4 to MM6 36
4.4.2 Cable and fuse sizes, frames MM4 to MM6, North America 38
4.4.3 Brake resistor cables 39
4.4.4 Control cables 39
4.5 Cable installation 40
5. Control unit 46
5.1 Control unit cabling 47
5.1.1 Control cable sizing 47
5.1.2 Standard I/O terminals 48
5.1.3 Relay and thermistor input terminals 49
5.1.4 Safe Torque off (STO) terminals 49

5.1.5 Selection of terminal functions with dip switches 50
5.1.6 Isolating digital inputs from ground 50
5.1.7 Bus termination of the RS485 connection 51
5.2 I/O cabling and Fieldbus connection 52
5.2.1 Prepare for use through Ethernet 52
5.2.2 Prepare for use through RS485 53
5.2.3 RS485 cable data 54
5.3 Battery installation for Real Time Clock (RTC) 55
6. Commissioning 58
6.1 Commissioning of the drive 59
6.2 Changing EMC protection class 60
6.3 Running the motor 62
6.3.1 Cable and motor insulation checks 62
6.4 Maintenance 63
7. Technical data 64
7.1 AC drive power ratings 64
7.1.1 Mains voltage 3AC 208-240V 64
7.1.2 Mains voltage 3AC 380-480/500V 65
7.1.3 Definitions of overloadability 66
7.2 Brake resistor ratings 67
7.3 VACON® 100 X - technical data 68
7.3.1 Technical information on control connections 71
8. Options 74
8.1 Mains switch 74
8.1.1 Installation 74
8.2 Control Keypad 78
8.2.1 Mounting onto the drive 78
8.2.2 Installation 79
8.2.3 Wall-mounting 81
8.2.4 Graphical and Text keypad 83
8.2.5 VACON® keypad with graphical display 84
8.2.6 VACON® keypad with text segment display 91
8.2.7 Fault Tracing 95
8.3 Heater (arctic option) 104
8.3.1 Safety 104
8.3.2 Dangers 104
8.3.3 Technical data 104
8.3.4 Fuses 105
8.3.5 Mounting instructions: MM4 Example 105
8.4 Option boards 109
8.5 Flange adapter 110
8.5.1 Mounting instructions: MM4 Example 113
9. Safe Torque Off 116
9.1 General description 116
9.2 Warnings 116
9.3 Standards 117
9.4 The principle of STO 118
9.4.1 Technical details 119
9.5 Connections 120
9.5.1 Safety Capability Cat. 4 / PL e / SIL 3 121
9.5.2 Safety Capability Cat. 3 / PL e / SIL 3 123
9.5.3 Safety Capability Cat. 2 / PL d / SIL 2 123
9.5.4 Safety Capability Cat. 1 / PL c / SIL 1 124
9.6 Commissioning 125

9.6.1 General wiring instructions 125
9.6.2 Checklist for commissioning 125
9.7 Parameters and fault tracing 126
9.8 Maintenance and diagnostics 126

1. SAFETY

This manual contains clearly marked warning information which is intended for your personal safety and to avoid any unintentional damage to the product or connected appliances.

Please read the warning information carefully.

VACON® 100 X is a drive designed to control asynchronous AC motors and permanent magnet motors. The product is intended to be installed in a restricted access location and for a general purpose use.

Only VACON® authorized, trained and qualified personnel are allowed to install, operate and maintain the drive.

1.1 SIGNS

The cautions and warnings are marked as follows:

	= DANGEROUS VOLTAGE!
	= HOT SURFACE
	= WARNING or CAUTION

Table 1. Warning signs.

1.2 UNITS

The dimensions used in this manual conform to International Metric System units, otherwise known as SI (Système International d'Unités) units. For the purpose of the equipment's UL certification, some of these dimensions are accompanied by their imperial equivalents.

Physical dimension	SI value	US value	Conversion factor	US designation
length	1 mm	0.0394 inch	25.4	inch
Weight	1 kg	2.205 lb	0.4536	pound
Speed	1 min^{-1}	1 rpm	1	revolution per minute
Temperature	1 °C (T1)	33.8 °F (T2)	T2 = T1 x 9/5 + 32	Fahrenheit
Torque	1 Nm	8.851 lbf in	0.113	pound-force inches
Power	1 kW	1.341 HP	0.7457	horsepower

Table 2. Unit conversion table.

1.3 DANGER

The **components of the power unit of** VACON® 100 X drives **are live** when the drive is connected to mains potential. Coming into contact with this voltage is **extremely dangerous** and may cause death or severe injury.

The **motor terminals (U, V, W), the brake resistor terminals and the DC-terminals are live** when VACON® 100 X Drive is connected to the mains, even if the motor is not running.

After disconnecting the AC drive from the mains, **wait** until the indicators on the keypad go out (if no keypad is connected, see the indicators on the cover). Wait an additional 30 seconds before doing any work on the connections of VACON® 100 X Drive. Do not open the unit before this time has expired. After expiration of this time, use measuring equipment to absolutely ensure that no voltage is present. **Always ensure absence of voltage before starting any electrical work!**

The control I/O-terminals are isolated from the mains potential. However, the **relay outputs and other I/O-terminals may have a dangerous control voltage** present even when VACON® 100 X drive is disconnected from the mains.

Before connecting the AC drive to mains make sure that the powerhead of VACON® 100 X Drive is mounted firmly on the terminal box.

During a coast stop (see the Application Manual), the motor is still generating voltage to the drive. Therefore, do not touch the components of the AC drive before the motor has completely stopped and wait until the indicators on the keypad go out (if no keypad is connected, see the indicators on the cover). Wait an additional 30 seconds before starting any work on the drive.

1.4 WARNINGS

VACON® 100 X AC drive is meant for **fixed installations** (on the motor or on the wall) **only**.

Only DVC A circuits (Decisive Voltage Class A, according to IEC 61800-5-1) are allowed to be connected to the control unit. This advice aims to protect both the drive and the client-application. VACON® is not responsible for direct or consequential damages resulting from unsafe connections of external circuits to the drive. See paragraph 1.6 for more details.

Do not perform any measurements when the AC drive is connected to the mains.

The **touch current** of VACON® 100 X AC drives exceeds 3.5mA AC. According to standard EN61800-5-1, **a reinforced protective ground connection** must be ensured. See paragraph 1.5 for more details.

If the AC drive is used as a part of a machine, the **machine manufacturer is responsible** for providing the machine with a **supply disconnecting device** (EN 60204-1). See paragraph 4.1 for more details.

Only **spare parts** delivered by VACON® can be used.

At power-up or fault reset, **the motor will start immediately** if the start signal is active, unless the pulse control for Start/Stop logic has been selected) and the STO inputs are ready to be used (normal operation). The I/O functionalities (including start inputs) may change if parameters, applications or software are changed. Disconnect, therefore, the motor if an unexpected start can cause danger. This is valid only if STO inputs are energized. For prevention on unexpected restart, use appropriate safety relay connected to the STO inputs.

The **motor starts automatically** after automatic fault reset if the autoreset function is activated. See the Application Manual for more detailed information. This is valid only if STO inputs are energized. For prevention on unexpected restart, use appropriate safety relay connected to the STO inputs.

Before performing any measurement on the motor or on the motor cable, disconnect the motor cable from the AC drive.

Do not perform any voltage withstand test on any part of VACON® 100 X. The tests shall be performed according to a specific procedure. Ignoring this procedure may damage the product.

Do not touch the components on the circuit boards. Static voltage discharge may damage the components.

Check that the **EMC level** of the AC drive corresponds to the requirements of your supply network. See paragraph 6.2 for more details.

In a domestic environment, this product may cause radio interference in which case supplementary mitigation measures may be required.

Optional keypad is IP66/Type 4X outdoor rated. Strong exposure to direct sunlight or to heavy temperatures might cause the degradation of display LCD.

1.5 EARTHING AND EARTH FAULT PROTECTION

CAUTION!

The VACON® 100 X AC drive must always be earthed with an earthing conductor connected to the earthing terminal marked with ⏚.

See Table 16 and Table 17 for the required cross-section of phase conductor and protective earthing conductor (both made of copper).

Since the touch current exceeds 3.5 mA AC, according to EN61800-5-1, the MM4 and MM5 shall have a fixed connection and provision of an **additional terminal for a second protective earthing conductor** of the same cross-sectional area as the original protective earthing conductor. MM6 shall have a fixed installation and a cross-section of the protective earthing conductor of at least 10 mm^2 Cu.

On the terminal-box, **three screws** (for MM4 and MM5) and **two screws** (for MM6)are provided for ORIGINAL and MOTOR protective earthing conductors: the customer can choose the screw for each one.

The cross-sectional area of every protective earthing conductor which does not form a part of the supply cable or cable enclosure shall, in any case, be not less than:

- 2.5 mm^2 if mechanical protection is provided or
- 4 mm^2 if mechanical protection is not provided. For cord-connected equipment, provisions shall be made so that the protective earthing conductor in the cord shall, in the case of failure of the strain-relief mechanism, be the last conductor to be interrupted.

The power-head is earthed through metal aglets, located on the terminal-box, which fit into spring baskets on the powerhead. See Figure 1, Figure 2 and Figure 3 for the location of the screws (three for MM4 and MM5, two for MM6) and the metal aglets (one for MM4 and MM5, two for MM6). Please, pay attention not to damage or remove these aglets.

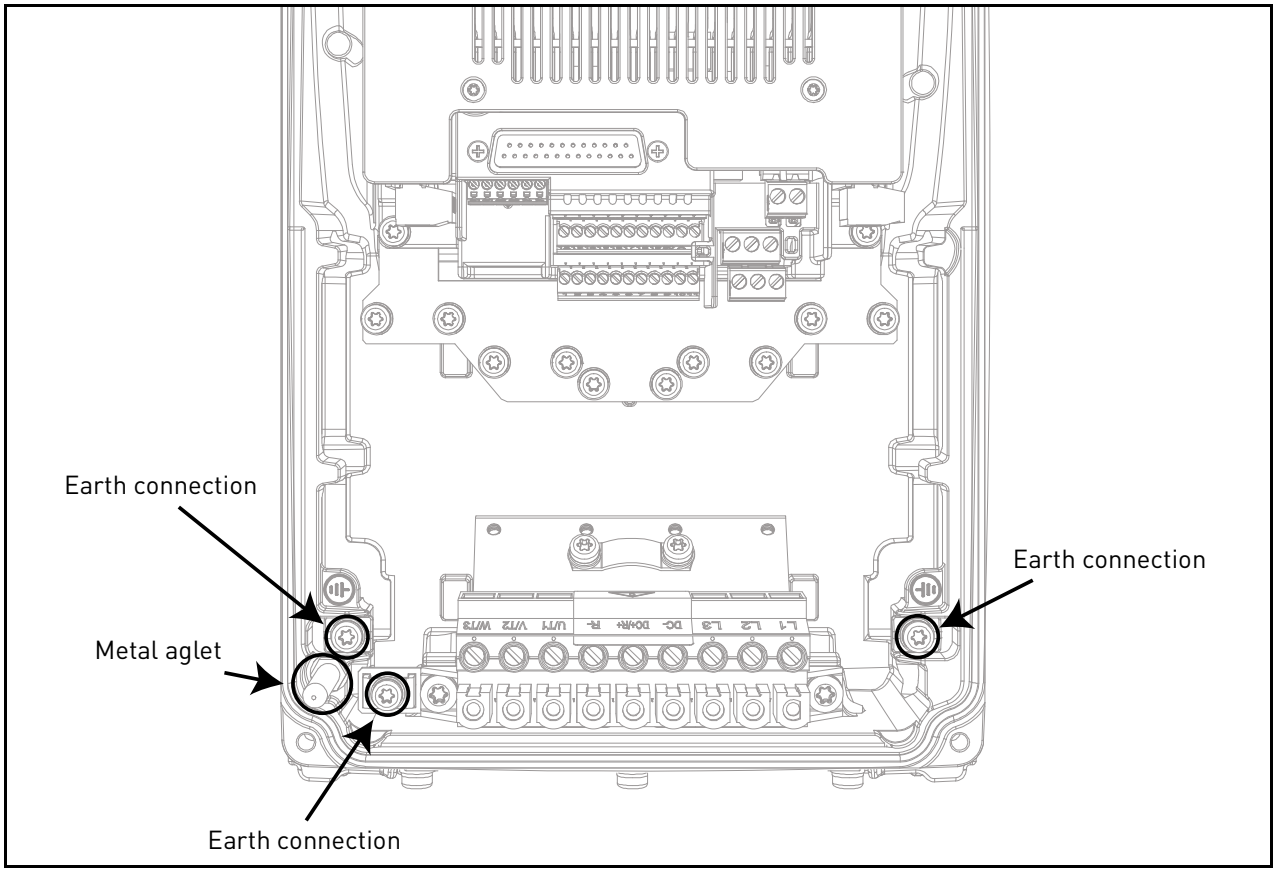

Figure 1. Earth connections and metal aglet in MM4.

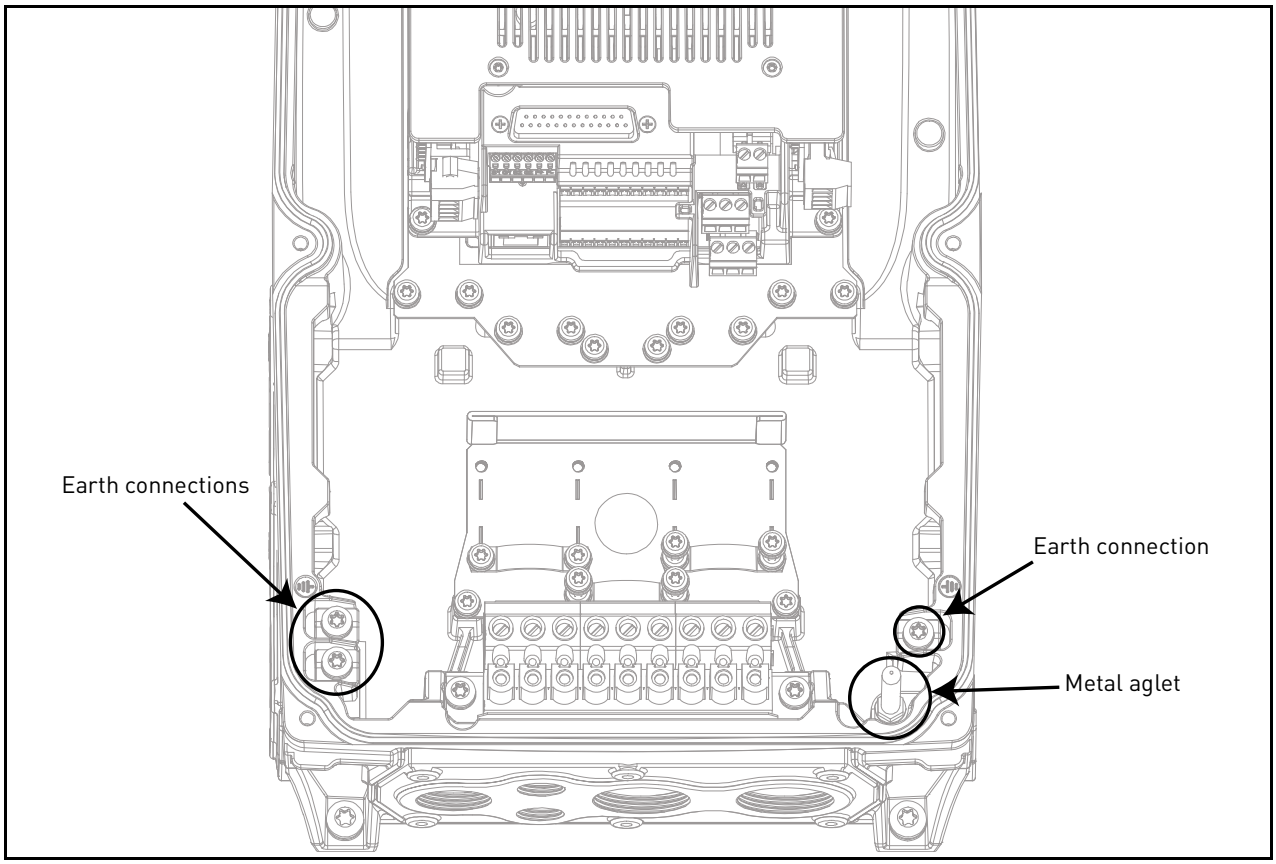

Figure 2. Earth connections and metal aglet in MM5.

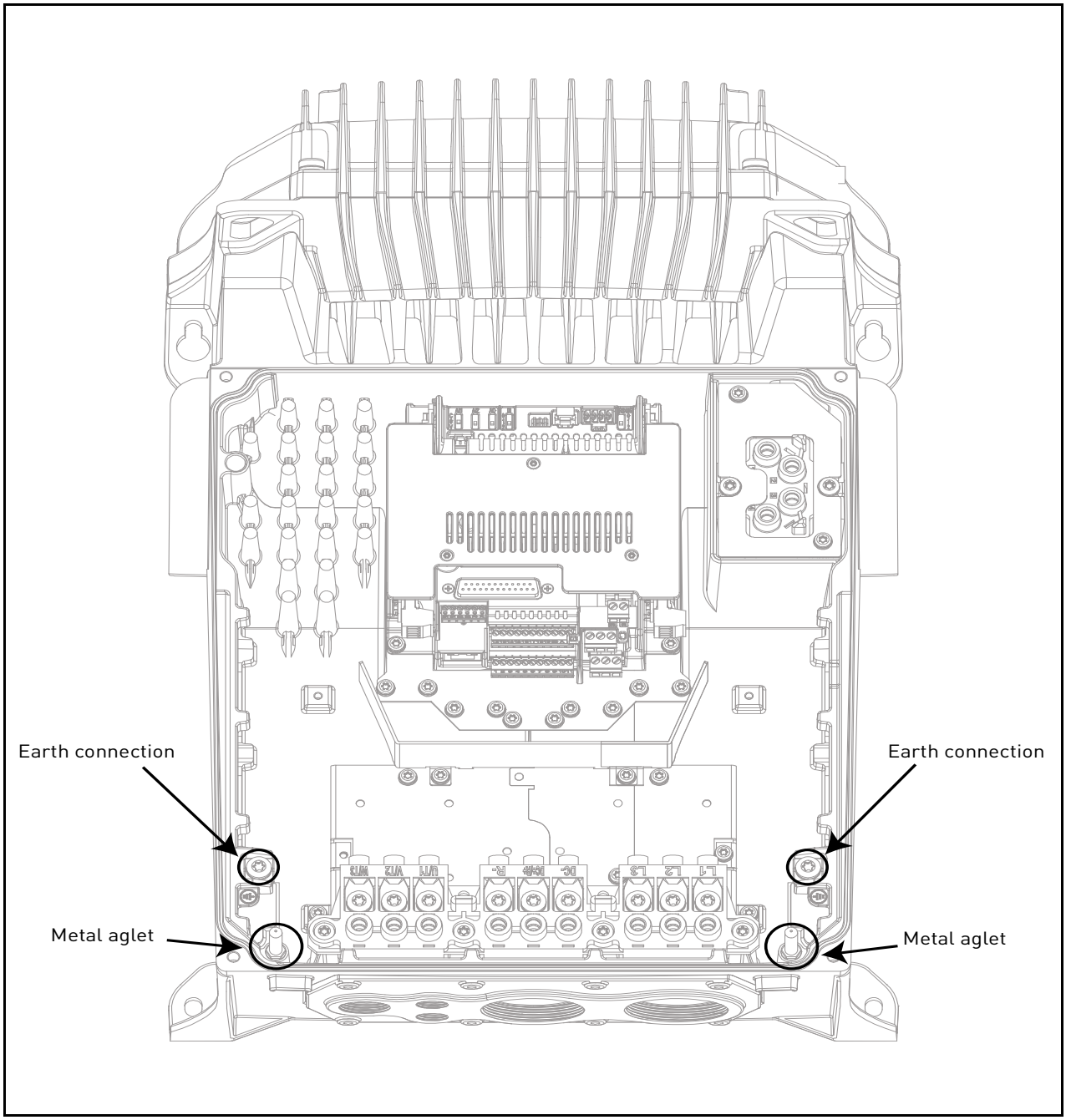

Figure 3. Earth connections and metal aglet in MM6.

However, always follow the local regulations for the minimum size of the protective earthing conductor.

NOTE: Due to the high capacitive currents present in the AC drive, fault current protective switches may not function properly.

1.6 INSULATION SYSTEM

Please, consider carefully the insulation system depicted in Figure 4 before connecting any circuit to the unit.

A distinction has to be made for the following three groups of terminals, according the insulation system of VACON® 100 X:

- Mains and motor connections (L1, L2, L3, U, V, W)
- Relays (R01, R02)(*)
- Thermistor-input
- Control terminals (I/Os, RS485, Ethernet, STO)

The Control terminals (I/Os, RS485, Ethernet, STO) are isolated from the Mains (the insulation is reinforced, according to IEC 61800-5-1) and **the GND terminals are referred to PE**.

This is important when you need to connect other circuits to the drive and test the complete assembly. Should you have any doubt or question, please contact your local VACON® distributor.

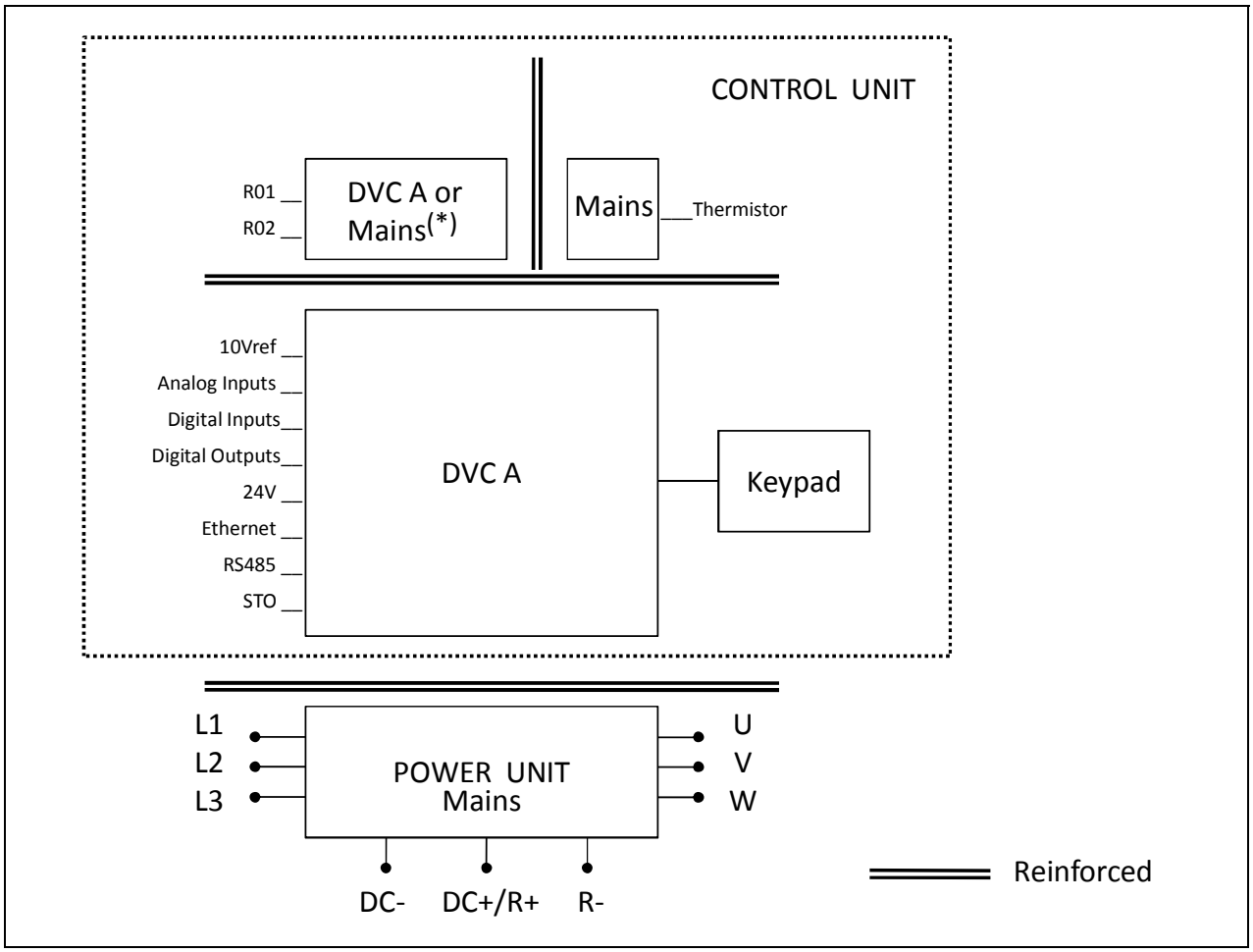

Figure 4. Insulation system.

(*) The relays may be used also with DVC A circuits. This is possible only if both relays are used with DVC A circuit: **to mix Mains and DVC A is not allowed.**

1.7 COMPATIBILITY WITH RCDS

This product can cause a d.c. current in the protective earthing conductor. Where a residual current-operated protective (RCD) or monitoring (RCM) device is used for protection in case of direct or indirect contact, only an RCD or RCM of **Type B** is allowed on the supply side of this product.

1.8 EXTENDED TEMPERATURE RANGE

VACON® 100 X has **an integrated cooling system**, independent from the motor fan. Under maximum operating conditions, the ambient temperature cannot exceed **40 °C**. See Table 28 and Table 29 for the output rated current. Higher temperatures are allowed only with derating of the output current. With derating the unit can **operate up to 60°C**. See the Figure 5.

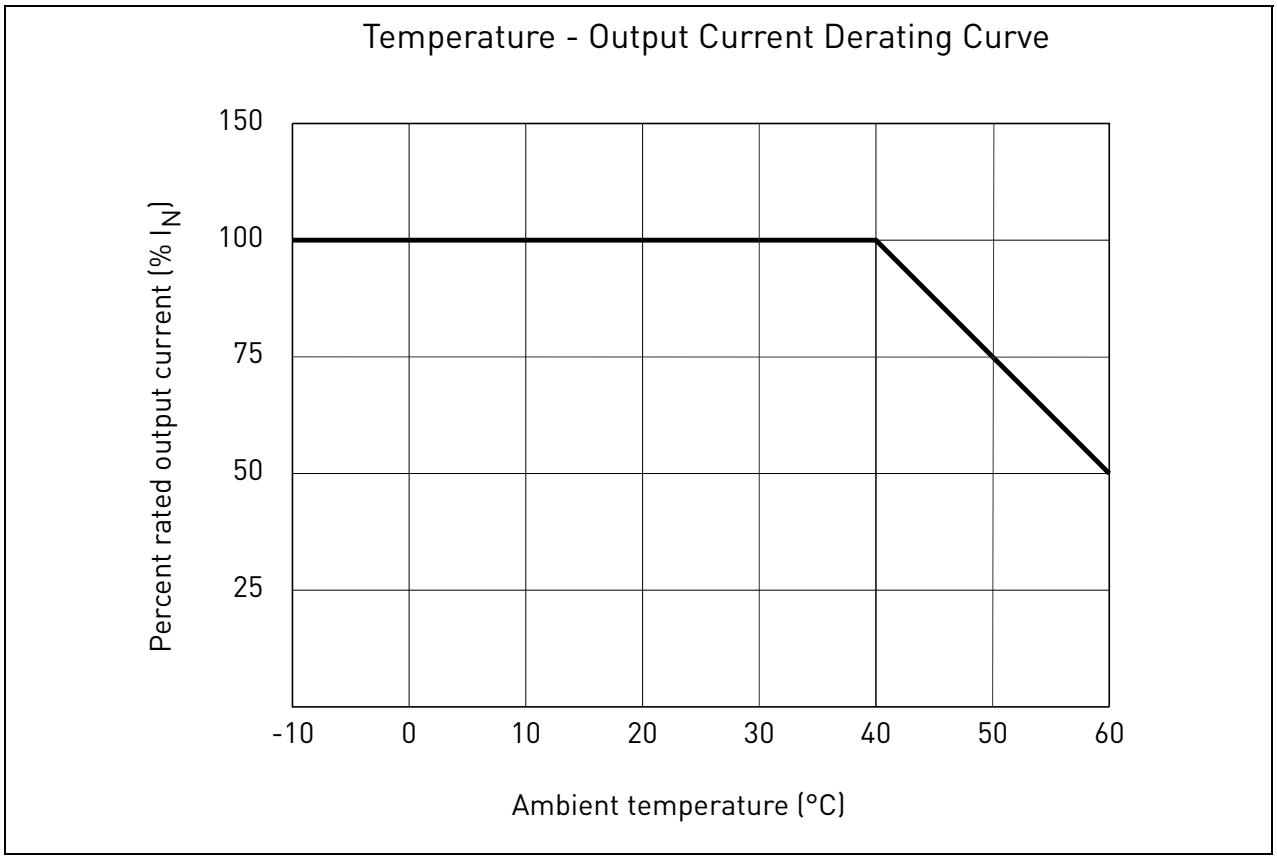

Figure 5. Temperature-output current derating curve.

NOTE: the maximum allowed switching frequency above 50°C is 1.5 kHz.

The AC drive is cooled down by air-ventilation. Therefore, make sure that enough free space is left around the AC drive to ensure sufficient air circulation (see for more details the mounting instructions on chapter 3).

1.9 ELECTRO-MAGNETIC COMPATIBILITY (EMC)

The VACON® 100 X complies with IEC 61000-3-12, provided that the short circuit power (SSC) is greater than or equal to 120 at the interface point between the user's supply and the public system. It is the responsibility of the installer or user of the equipment to ensure, by consultation with the distribution network operator if necessary, that the equipment is connected only to a supply with a short-circuit power SSC greater than or equal to 120.

1.10 DECLARATION OF CONFORMITY

VACON
DRIVEN BY DRIVES

EC DECLARATION OF CONFORMITY

Manufacturer's name:	Vacon Srl
Manufacturer's address:	Via Roma, 2 I-39014 Postal (BZ), Italy

We hereby declare that the following product

Product name:	Vacon 100 AC drive
Product Identification:	VACON0100-3L-a-b-c ±d ±e a = 0003 – 0012; (Frame Size 4) a = 0016 – 0031; (Frame Size 5) a = 0038 – 0072; (Frame Size 6) b = 2, 4, 5; (Voltage Rating) c = X; (Enclosure option) ±d, ±e = Additional Codes
Product Safety Functions:	Safe Torque Off (EN 61800-5-2:2007) and Emergency stop (EN 60204-1:2006 + A1:2009 + AC:2010 in extracts)

Complies with the following EU legislation: Low Voltage Directive (LVD) 2006/95/EC, Electromagnetic Compatibility (EMC) 2004/108/EC, EC Machinery Directive 2006/42/EC.

Notified body that carried out the EC type examination:

TÜV Rheinland Industrie Service GmbH,
Alboinstr. 56, 12103 Berlin / Germany

Certification Body for Machinery NB 0035, Certificate No. 01/205/5219.01/13 (applied to b = 4, 5)

The following standards and/or technical specifications referenced below were used:

EN 61800-5-2:2007

EN 61800-5-1:2007 (LV Directive compliance)

EN 61800-3:2004+A1:2012 (EMC Directive compliance)

EN ISO 13849-1:2008+AC:2009

EN 62061:2005+AC:2010

These products are intended for installation in machines. Operation is prohibited until it has been determined that the machines in which these products are to be installed, conforms to the above mentioned EC Directive(s).

Signature

Postal, 28.08.2014

Andrea Perin
Country Manager

Figure 6. Declaration of conformity.

TÜVRheinland®

ZERTIFIKAT
CERTIFICATE

EC Type-Examination Certificate

Reg.-No.: 01/205/5219.01/13

Product tested	Safety function "Safe Torque Off (STO)" within Adjustable Frequency AC Drive	**Certificate holder**	Vacon S.R.L. Via Roma, 2 39014 Postal (BZ) Italy
Type designation	Vacon 100 X AC Drive VACON0100-3L-a-b-c ±d ±e, a = 0003-0012; (Frame Size 4), a = 0016-0031; (Frame Size 5), a = 0038-0072; (Frame Size 6) b = 4, 5; (Voltage Rating), c = X; (Enclosure Option), ±d, ±e = Additional Codes	**Manufacturer**	see certificate holder
Codes and standards forming the basis of testing	EN 61800-5-2:2007 EN 61800-5-1:2007 EN 61800-3:2004 EN ISO 13849-1:2008 + AC:2009		EN 62061:2005 + AC:2010 IEC 61508 Parts 1-7:2010 EN 60204-1:2006 + A1:2009 + AC:2010 (in extracts)
Intended application	The safety function "Safe Torque Off" complies with the requirements of the relevant standards (PL e acc. to EN ISO 13849-1, SIL CL 3 acc. to EN 61800-5-2 / EN 62061 / IEC 61508) and can be used in applications up to PL e acc. to EN ISO 13849-1 and SIL 3 acc. to EN 62061 / IEC 61508.		
Specific requirements	The instructions of the associated Installation and Operating Manual shall be considered.		
It is confirmed that the product under test complies with the requirements for machines defined in Annex I of the EC Directive 2006/42/EC.			
This certificate is valid until 2018-11-28.			

The issue of this certificate is based upon an examination, whose results are documented in report-no.: 968/M 351.01/13 dated 2013-11-28.

This certificate is valid only for products which are identical with the product tested. It becomes invalid at any change of the codes and standards forming the basis of testing for the intended application.

TÜVRheinland® 0035 Notified Body

Berlin, 2013-11-28

Certification Body for Machinery, NB 0035

Dipl.-Ing. Eberhard Frejno

® TÜV, TÜEV and TÜV are registered trademarks. Utilisation and application requires prior approval.

TÜV Rheinland Industrie Service GmbH, Alboinstr. 56, 12103 Berlin / Germany
Tel.: +49 30 7562-1557, Fax: +49 30 7562-1370, E-Mail: industrie-service@de.tuv.com

10/207 BB neutral 11.06

Figure 7. STO certificate.

NOTE! You can download the English and French product manuals with applicable safety, warning and caution information from www.vacon.com/downloads.

REMARQUE Vous pouvez télécharger les versions anglaise et française des manuels produit contenant l'ensemble des informations de sécurité, avertissements et mises en garde applicables sur le site www.vacon.com/downloads.

2. RECEIPT OF DELIVERY

Check the correctness of delivery by comparing your order data to the drive information found on the package label. If the delivery does not correspond to your order, contact the supplier immediately. See chapter 2.4.

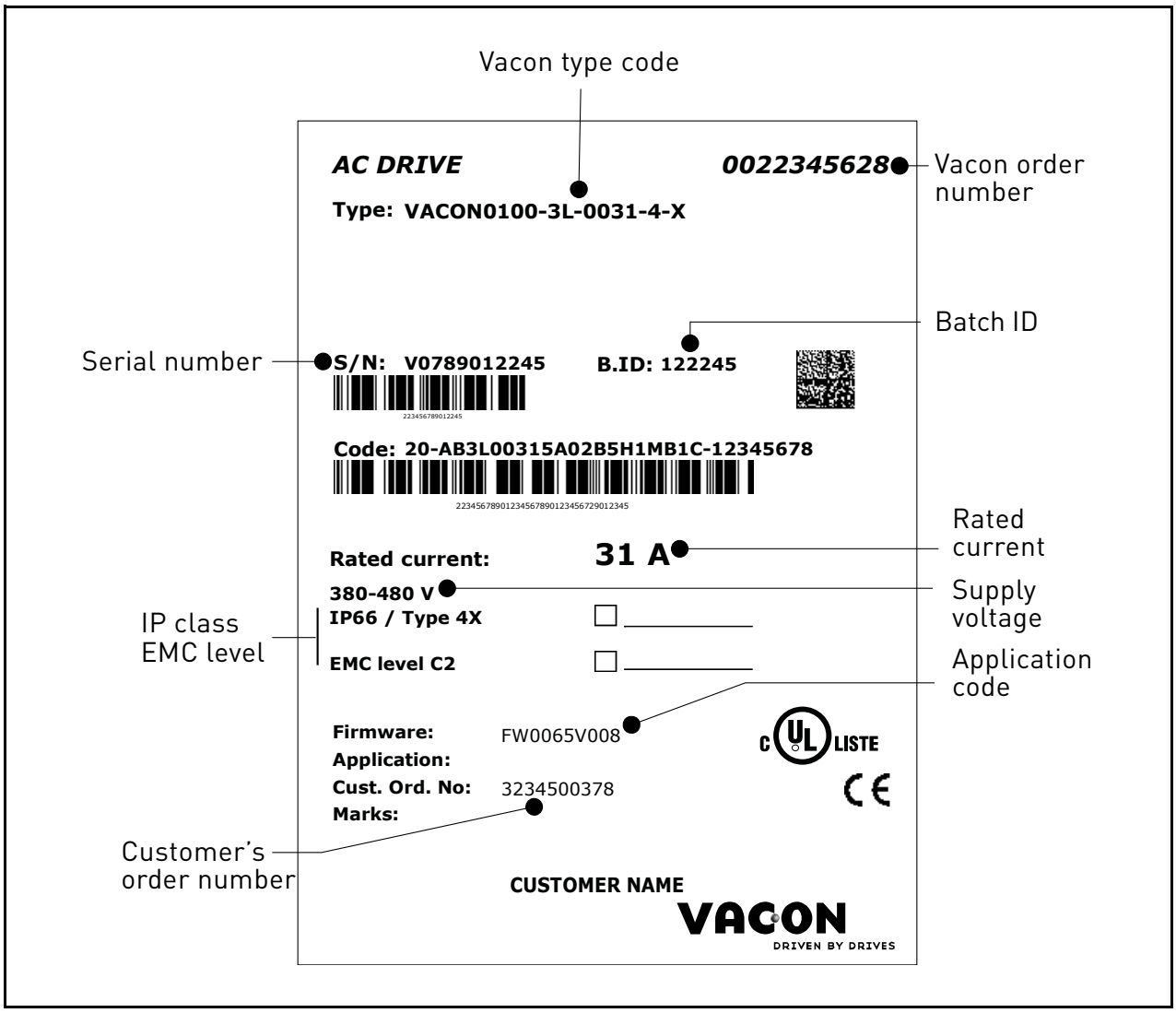

Figure 8. VACON® package label.

2.1 TYPE DESIGNATION CODE

VACON® type designation code is formed of a nine-segment code and optional +codes. Each segment of the type designation code uniquely corresponds to the product and options you have ordered. The code is of the following format:

VACON0100-3L-0061-4-X +xxxx +yyyy

VACON

This segment is common for all products.

0100

Product range:

0100 = VACON® 100

3L

Input/Function:

3L = Three-phase input

0061

Drive rating in ampere; e.g. 0061 = 61 A

See Table 28, Table 29 and Table 30 for all the drive ratings.

4

Supply voltage:

2 = 208-240 V
4 = 380-480 V
5 = 380-500 V

X

-IP66/ Type 4X

-EMC-level C2

-Two relay outputs

-One thermistor input

-STO function

-GP software package installed

+xxxx +yyyy

Additional codes (Several options possible).

Examples of additional codes:

+HMGR

Graphical keypad IP66

+F0065

HVAC software package installed

+F0159

FLOW software package installed

+SRBT

Integrated battery for real time clock

+FBIE

Onboard fieldbus protocols activated (Ethernet IP and Profinet IO)

+FBEI

Onboard Ethernet IP protocol activated

+FBPN

Onboard Profinet IO protocol activated

2.2 ORDER CODES

The order codes for Vacon 100 X drive family are shown in the following table:

Frame size	Order code	Description
Supply voltage 3AC 208-240V		
MM4	VACON0100-3L-0007-2-X	1.1 kW - 1.5 HP drive
	VACON0100-3L-0008-2-X	1.5 kW - 2.0 HP drive
	VACON0100-3L-0011-2-X	2.2 kW - 3.0 HP drive
	VACON0100-3L-0012-2-X	3.0 kW - 4.0 HP drive
MM5	VACON0100-3L-0018-2-X	4.0 kW - 5.0 HP drive
	VACON0100-3L-0024-2-X	5.5 kW - 7.5 HP drive
	VACON0100-3L-0031-2-X	7.5 kW - 10.0 HP drive
MM6	VACON0100-1L-0048-2-X	11.0 kW - 15.0 HP drive
	VACON0100-1L-0062-2-X	15.0 kW - 20.0 HP drive
Supply voltage 3AC 380-480V		
MM4	VACON0100-3L-0003-4-X	1.1 kW - 1.5 HP drive
	VACON0100-3L-0004-4-X	1.5 kW - 2.0 HP drive
	VACON0100-3L-0005-4-X	2.2 kW - 3.0 HP drive
	VACON0100-3L-0008-4-X	3.0 kW - 4.0 HP drive
	VACON0100-3L-0009-4-X	4.0 kW - 5.0 HP drive
	VACON0100-3L-0012-4-X	5.5 kW - 7.5 HP drive
MM5	VACON0100-3L-0016-4-X	7.5 kW - 10.0 HP drive
	VACON0100-3L-0023-4-X	11.0 kW - 15.0 HP drive
	VACON0100-3L-0031-4-X	15.0 kW - 20.0 HP drive
MM6	VACON0100-3L-0038-4-X	18.5 kW - 25.0 HP drive
	VACON0100-3L-0046-4-X	22.0 kW - 30.0 HP drive
	VACON0100-3L-0061-4-X	30.0 kW - 40.0 HP drive
	VACON0100-3L-0072-4-X	37.0 kW - 50.0 HP drive
Supply voltage 3AC 380-500V		
MM4	VACON0100-3L-0003-5-X	1.1 kW - 1.5 HP drive
	VACON0100-3L-0004-5-X	1.5 kW - 2.0 HP drive
	VACON0100-3L-0005-5-X	2.2 kW - 3.0 HP drive
	VACON0100-3L-0008-5-X	3.0 kW - 4.0 HP drive
	VACON0100-3L-0009-5-X	4.0 kW - 5.0 HP drive
	VACON0100-3L-0012-5-X	5.5 kW - 7.5 HP drive
MM5	VACON0100-3L-0016-5-X	7.5 kW - 10.0 HP drive
	VACON0100-3L-0023-5-X	11.0 kW - 15.0 HP drive
	VACON0100-3L-0031-5-X	15.0 kW - 20.0 HP drive
MM6	VACON0100-3L-0038-5-X	18.5 kW - 25.0 HP drive
	VACON0100-3L-0046-5-X	22.0 kW - 30.0 HP drive
	VACON0100-3L-0061-5-X	30.0 kW - 40.0 HP drive
	VACON0100-3L-0072-5-X	37.0 kW - 50.0 HP drive

Table 3. Order codes of Vacon 100 X. See chapter 7 for more details.

2.3 UNPACKING AND LIFTING THE AC DRIVE

The weights of the AC drives vary according to frame size. You may need to use a piece of special lifting equipment to move the converter from its package. Note the weights of each individual frame size in Table 4 below.

Frame	Weight	
	[kg]	[lb]
MM4	8.8	19.4
MM5	14.9	32.8
MM6	31.5	69.4

Table 4. Frame weights.

VACON® 100 X drives have undergone scrupulous tests and quality checks at the factory before they are delivered to the customer. However, after unpacking the product, check that no signs of transport damage are to be found on the product and that the delivery is complete.

Should the drive have been damaged during shipping, please contact the cargo insurance company or the carrier in the first instance.

2.4 ACCESSORIES

After having opened the transport package and lifted the drive out, check immediately that these various accessories were included in the delivery. The contents of the accessories bag differ by drive size:

2.4.1 FRAME MM4

Item	Quantity	Purpose
STO terminal connector	1	Six pin black connector (see Figure 9) to use STO function
M4 x 12 DIN6900-3-Combi-Delta-Tx screw	10	Screws for control cable clamps
M1-3 Cable clamp	5	Clamping control cables
M4 x 12 DIN6900-3-Combi-Delta-Tx screw	6	Screws for power cable clamps
M25 Cable clamp	3	Clamping power cables
'Product modified' sticker	1	Information about modifications
HMI cap*	1	Closing cap for the HMI connector

Table 5. Content of accessory bag, MM4.

*. Provided only if the drive is delivered with the keypad.

2.4.2 FRAME MM5

Item	Quantity	Purpose
STO terminal connector	1	Six pin black connector (see Figure 9) to use STO function
M4 x 12 DIN6900-3-Combi-Delta-Tx screw	10	Screws for control cable clamps
M1-3 Cable clamp	5	Clamping control cables
M4 x 12 DIN6900-3-Combi-Delta-Tx screw	6	Screws for power cable clamps
M32 Cable clamp	3	Clamping power cables
'Product modified' sticker	1	Information about modifications
HMI cap*	1	Closing cap for the HMI connector

Table 6. Content of accessory bag, MM5.

*. Provided only if the drive is delivered with the keypad.

2.4.3 FRAME MM6

Item	Quantity	Purpose
STO terminal connector	1	Six pin black connector (see Figure 9) to use STO function
M4 x 12 DIN6900-3-Combi-Delta-Tx screw	10	Screws for control cable clamps
M1-3 Cable clamp	5	Clamping control cables
M4 x 25 DIN6900-3-Combi-Delta-Tx screw	6	Screws for power cable clamps
M40 Cable clamp	3	Clamping power cables
'Product modified' sticker	1	Information about modifications
HMI cap*	1	Closing cap for the HMI connector

Table 7. Content of accessory bag, MM6.

*. Provided only if the drive is delivered with the keypad mounted.

2.4.4 STO TERMINAL CONNECTOR

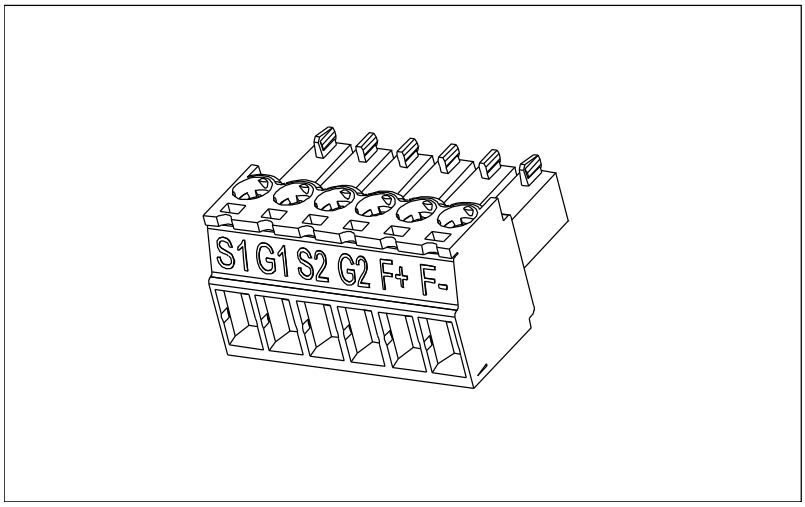

Figure 9. STO connector.

2.4.5 'PRODUCT MODIFIED' STICKER

In the small plastic bag included in the delivery you will find a silver *Product modified* sticker. The purpose of the sticker is to notify the service personnel about the modifications made in the AC drive. Attach the sticker on the side of the AC drive to avoid losing it. Should the AC drive be later modified mark the change on the sticker.

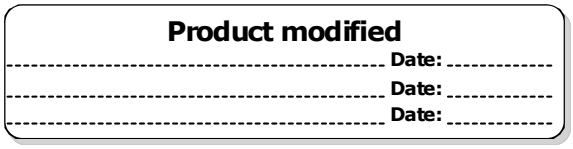

Figure 10. 'Product modified' sticker.

2.4.6 DISPOSAL

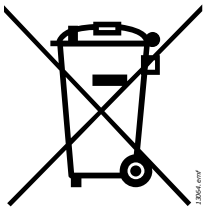	When the device reaches the end of its operating life do not dispose of it as a part of standard household garbage. Main components of the product can be recycled, but some need to be fragmented to separate different types of materials and components that need to be treated as special waste from electrical and electronic components. To ensure environmentally sound and safe recycling treatment, the product can be taken to appropriate recycling center or returned to the manufacturer. Observe local and other applicable laws as they may mandate special treatment for specific components or special treatment may be ecologically sensible.

3. MOUNTING

VACON® 100 X is the ideal solution for a decentralised installation. It is conceived to be mounted on a wall or directly on the motor, saving space and reducing the cabling complexity. In both of the cases, it must be ensured that the mounting plane is even.

3.1 DIMENSIONS MM4

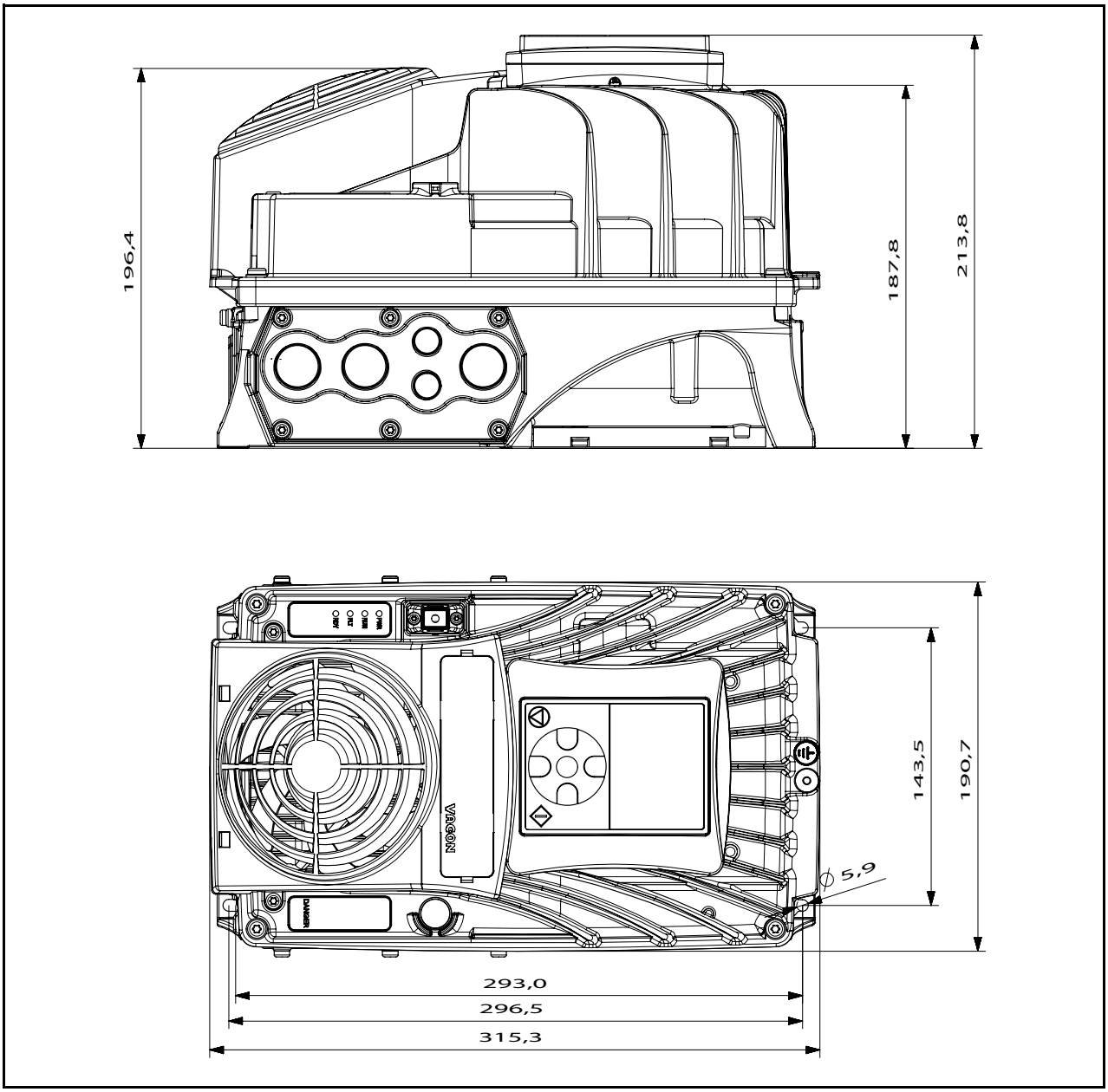

Figure 11. VACON® 100 X drive dimensions, MM4.

Frame	Dimensions W x H x D	
	[mm]	[in]
MM4	190.7 x 315.3 x 196.4	7.51 x 12.41 x 7.73
MM4 +HMGR	190.7 x 315.3 x 213.8	7.51 x 12.41 x 8.42

3.2 DIMENSIONS MM5

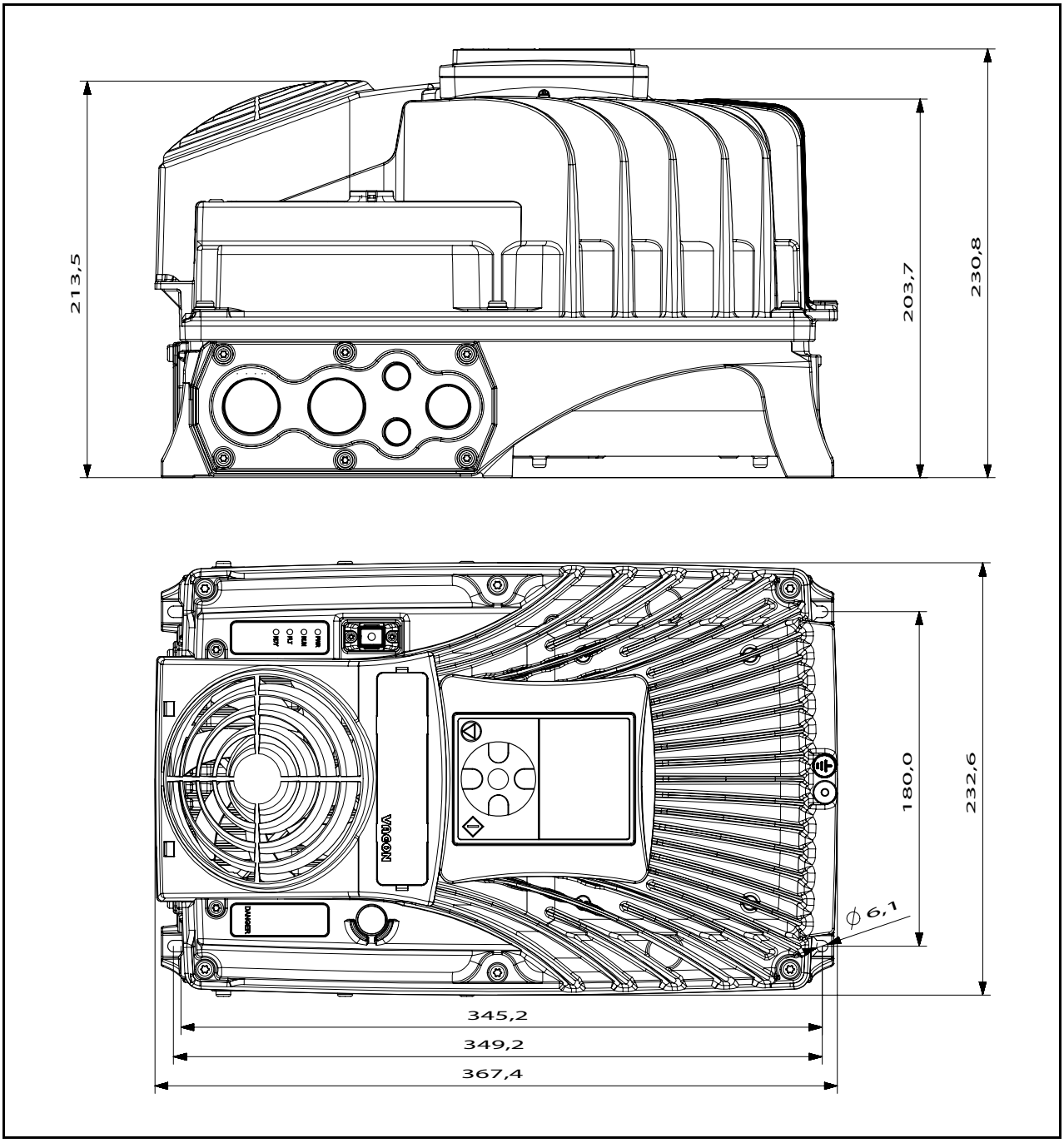

Figure 12. VACON® 100 X drive dimensions, MM5.

Frame	Dimensions W x H x D	
	[mm]	[in]
MM5	232.6 x 367.4 x 213.5	9.16 x 14.46 x 8.41
MM5 +HMGR	232.6 x 367.4 x 230.8	9.16 x 14.46 x 9.08

3.3 Dimensions MM6

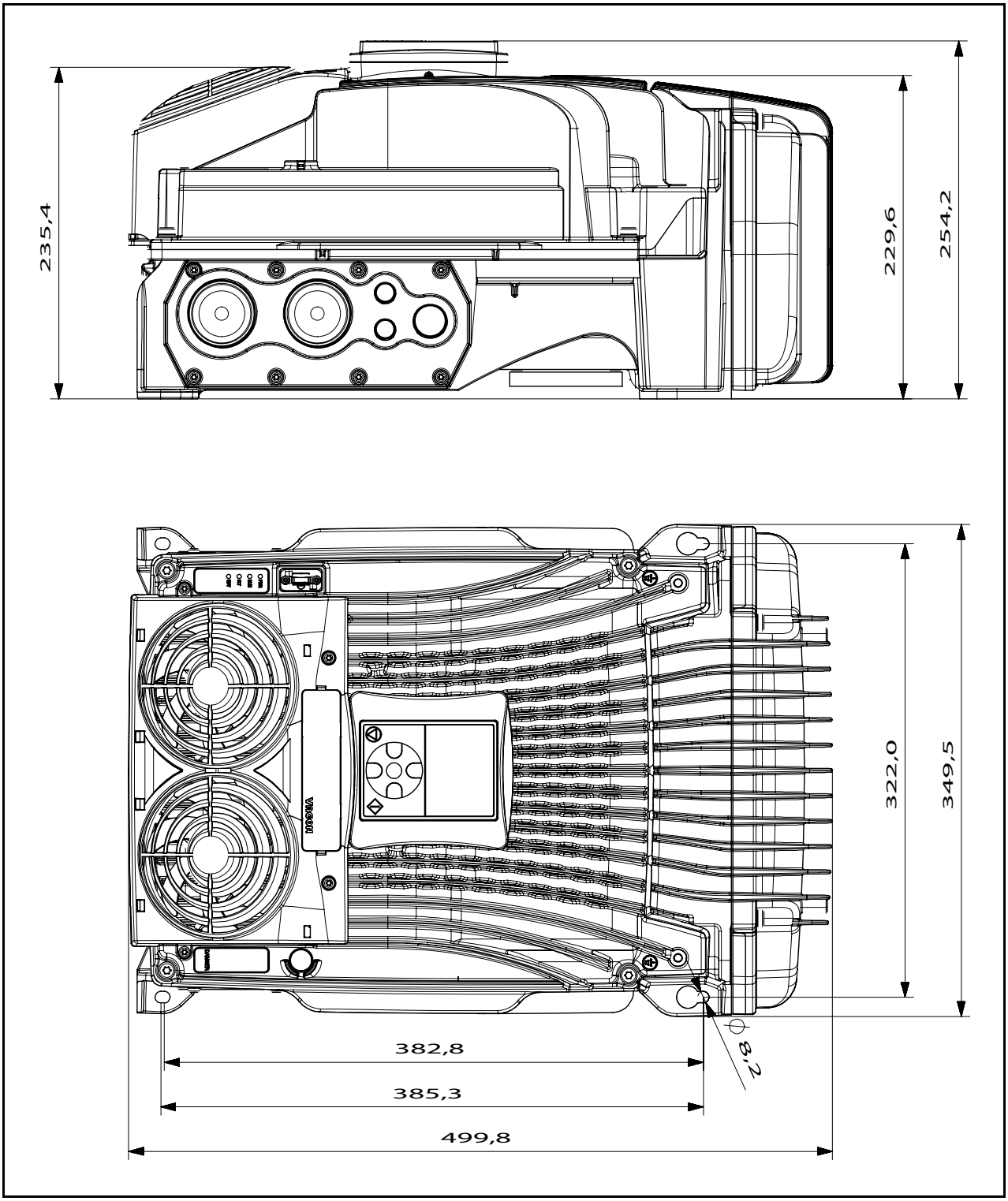

Figure 13. VACON® 100 X drive dimensions, MM6.

Frame	Dimensions W x H x D	
	[mm]	[in]
MM6	349.5 x 499.8 x 235.4	13.76 x 19.68 x 9.27
MM6 +HMGR	349.5 x 499.8 x 254.2	13.76 x 19.68 x 10.00

3.4 INTRODUCTION OF MODULES

The mechanical concept of VACON® 100 X drive is based on two segregated parts, power and control, connected to each other by pluggable terminals. The power unit, called powerhead, includes all the power electronics such as the EMC-filter, IGBTs, capacitors, choke or power boards while the control board and the control terminals are located in the terminal box.

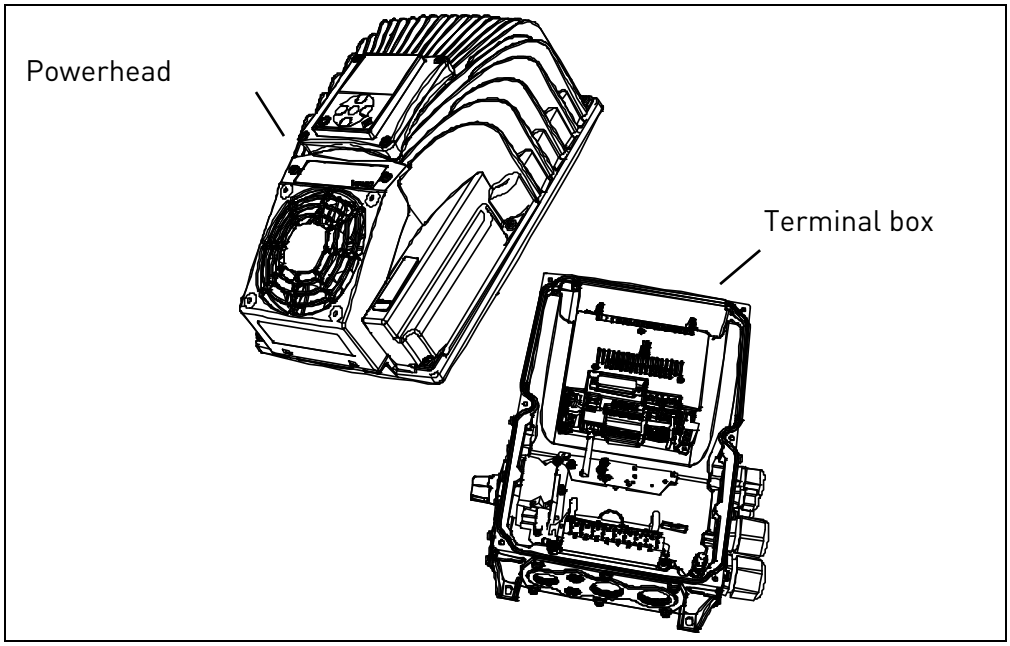

Figure 14. VACON® 100 X drive modules.

3.5 MOUNTING

The drive consists of two main elements:

1. The terminal box that includes the power terminals and control board with the control terminals and
2. The powerhead containing all the power electronics.

To install the drive, both parts need to be separated. The terminal box must be fixed first and all cabling done. After this, the powerhead will be plugged on the terminal box and fixed with 4 (MM4 and MM6) or 6 (MM5) dedicated screws located on top side of the powerhead (see Figure 15.). In order to guarantee specified IP protection, recommended fastening torque is 2-3 Nm. The screws should be tightened crosswise.

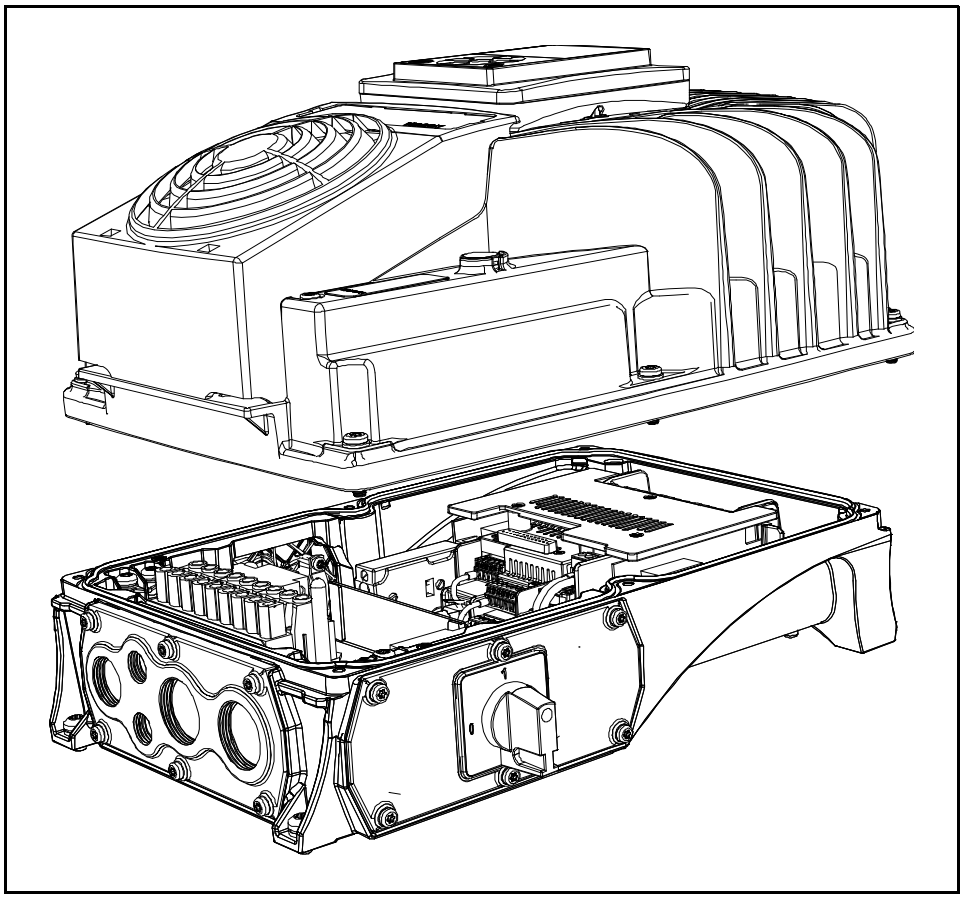

Figure 15. Separation of modules(MM5 example).

3.5.1 WALL-MOUNTING

The drive can be mounted in vertical or horizontal position on the wall or any other relatively even mounting plane or machine frame and fixed with the screws recommended in Table 8.

Recommended screw or bolt size for MM4 is M5, for MM5 M6 and MM6 is M8.

Frame	Screw number	Screw size
MM4	4	M5
MM5	4	M6
MM6	4	M8

Table 8. Screws for wall mounting.

3.5.2 MOTOR-MOUNTING

The drive can also be mounted on a motor (on top or on any side of the motor). The drive is equipped with a cooling system independent of the motor. Motor-mounting requires special adapting components. Contact your local VACON® distributor for additional information.

3.5.3 SEGREGATED MODULES

In order to ease replacements in case of failure, the power and the control sub-systems are enclosed in two segregated parts, connected together through pluggable terminals:

- Power-head: heat-sink enclosing all power electronics
- Terminal-box: block containing unit control and power terminals

Firstly, the terminal-box has to be fixed and the cabling has to be done. Secondly, the power-head has to be plugged and fixed to the terminal-box with dedicated screws (see Table 9). In order to preserve the specified IP protection class, **the recommended fastening torque is 2-3 Nm**.

Frame	Screw number	Screw size
MM4	4	M5
MM5	6	M5
MM6	4	M6

Table 9. Screws for fixing the powerhead to the terminal box.

3.6 COOLING

The AC drive produces heat in operation and is cooled down by air circulated by a fan. The cooling concept is independent of the motor fan.

Enough free space shall be left around the AC drive to ensure sufficient air circulation and cooling. Different acts of maintenance may also require a certain amount of free space.

The minimum clearances given in Table 10 must not be exceeded. It is also important to ensure that the temperature of the cooling air does not exceed the maximum ambient temperature of the converter.

Contact local VACON® distributor for more information on required clearances in different installations.

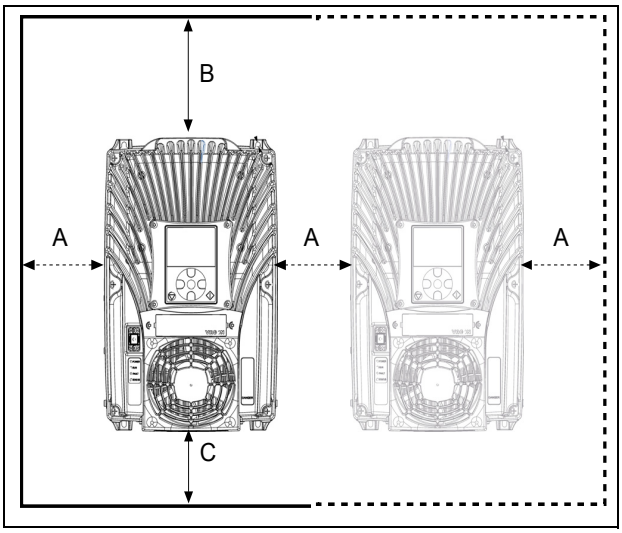

Figure 16. Installation space.

Min clearance [mm]			
Type	**A**	**B**	**C**
All types	80	160	60

Table 10. Min. clearances around AC drive.

A = Clearance left and right from the drive
B = Clearance above the drive
C = Clearance underneath the AC drive

Type	Cooling air required [m³/h]
MM4	140
MM5	140
MM6	280

Table 11. Required cooling air.

Should you need further details on the cooling system of the VACON® 100 X, please contact your local VACON® distributor.

4. POWER CABLING

The mains cables are connected to terminals L1, L2 and L3 and the motor cables to terminals marked with U, V and W. See principal connection diagram in Figure 17. See also Table 12 for the cable recommendations for different EMC levels.

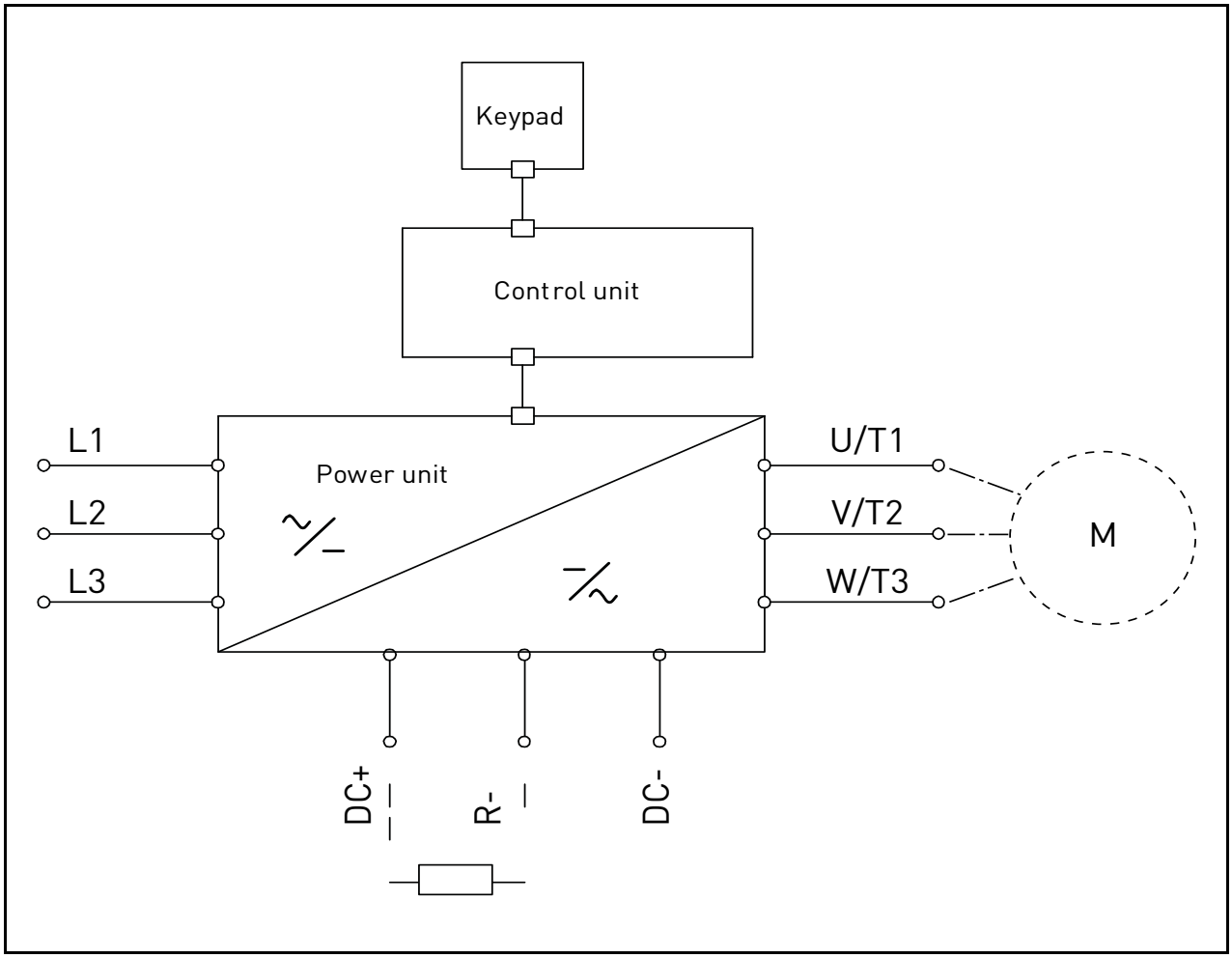

Figure 17. Principal connection diagram.

Use cables with heat resistance in accordance with the application requirements. The cables and the fuses must be dimensioned according to the AC drive nominal OUTPUT current which you can find on the rating plate.

Cable type	EMC levels		
	1st environment	2nd environment	
	Category C2	Category C3	Category C4
Mains cable	1	1	1
Motor cable	3*	2	2
Control cable	4	4	4

Table 12. Cable types required to meet standards.

1 = Power cable intended for fixed installation and the specific mains voltage. Shielded cable not required. (MCMK or similar recommended).
2 = Symmetrical power cable equipped with concentric protection wire and intended for the specific mains voltage. (MCMK or similar recommended). See Figure 18.
3 = Symmetrical power cable equipped with compact low-impedance shield and intended for the specific mains voltage. [MCCMK, EMCMK or similar recommended; Recommended cable transfer impedance (1...30MHz) max. 100 mOhm/m]. See Figure 18.
*360° earthing of the shield with cable glands in motor end needed for EMC level C2.
4 = Screened cable equipped with compact low-impedance shield (JAMAK, SAB/ÖZCuY-O or similar).

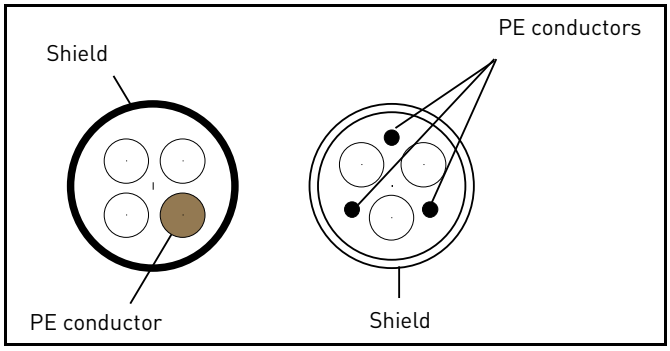

Figure 18.

NOTE: The EMC requirements are fulfilled at factory defaults of switching frequencies (all frames).
NOTE: If safety switch is connected the EMC protection shall be continuous over the whole cable installation.

4.1 CIRCUIT BREAKER

Please disconnect the drive via an external circuit breaker. You have to provide a switching device between supply and main connection terminals.

When connecting the input terminals to the power supply using a circuit breaker, observe that this is of **type B or type C** and ensure it has a **capacity of 1.5 to 2 times of the inverter's rated current** (see Table 28 and Table 29).

NOTE: circuit breaker is not allowed in installations where C-UL is required. Only fuses are recommended.

4.2 UL STANDARDS ON CABLING

To meet the UL (Underwriters Laboratories) regulations, use a UL-approved copper cable with a minimum heat-resistance of +70/75°C. Use Class 1 wire only.

The units are suitable for use on a circuit capable of delivering not more than 100,000 rms symmetrical amperes, 600V AC maximum, when protected by T or J class fuses.

Integral solid state short circuit protection does not provide branch circuit protection. Branch circuit protection must be provided in accordance with the **National Electrical Code** and any additional local codes.

4.3 DESCRIPTION OF THE TERMINALS

The following pictures describe the power terminals and the typical connections in Vacon® 100X drives.

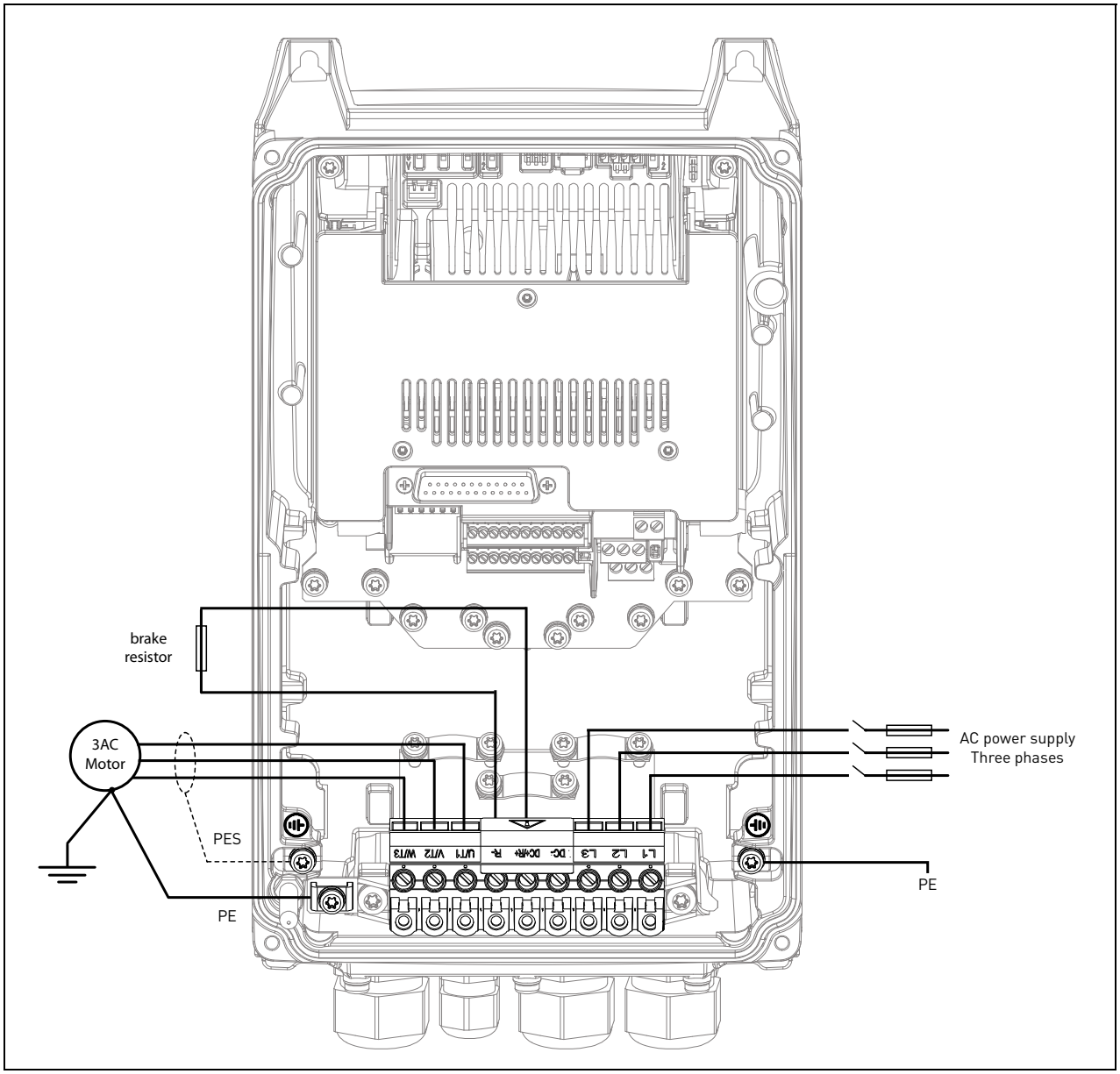

Figure 19. Power connections, MM4.

Terminal	Description
L1 L2 L3	These terminals are the input connections for the power supply.
DC- DC+/R+ R-	DC bus terminals (DC- DC+) and Brake resistor terminals (R+ R-)
U/T1 V/T2 W/T3	These terminals are for motor connections.

Table 13. Terminal description.

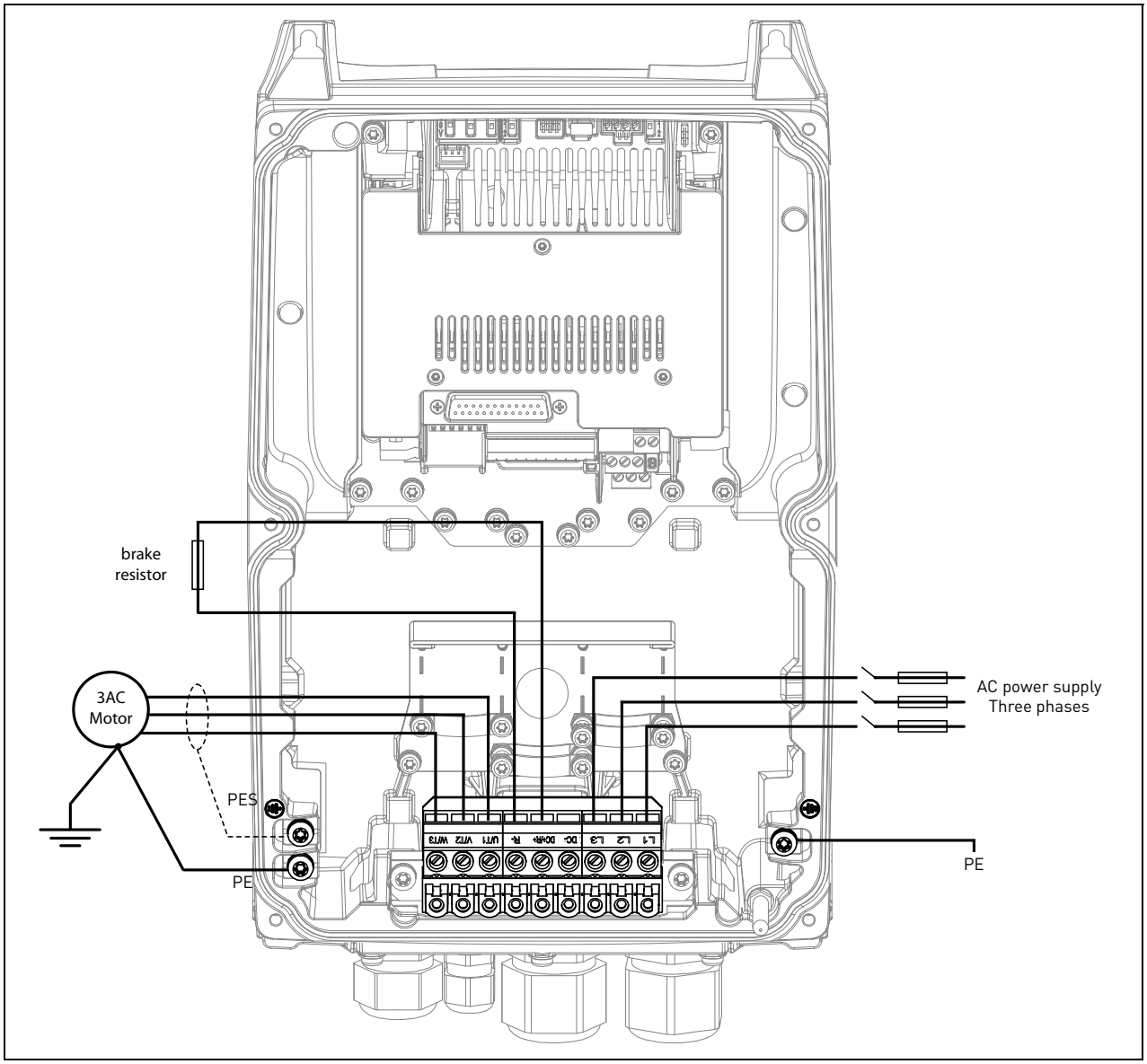

Figure 20. Power connections, MM5.

Terminal	Description
L1 L2 L3	These terminals are the input connections for the power supply.
DC- DC+/R+ R-	DC bus terminals (DC- DC+) and Brake resistor terminals (R+ R-)
U/T1 V/T2 W/T3	These terminals are for motor connections.

Table 14. Terminal description.

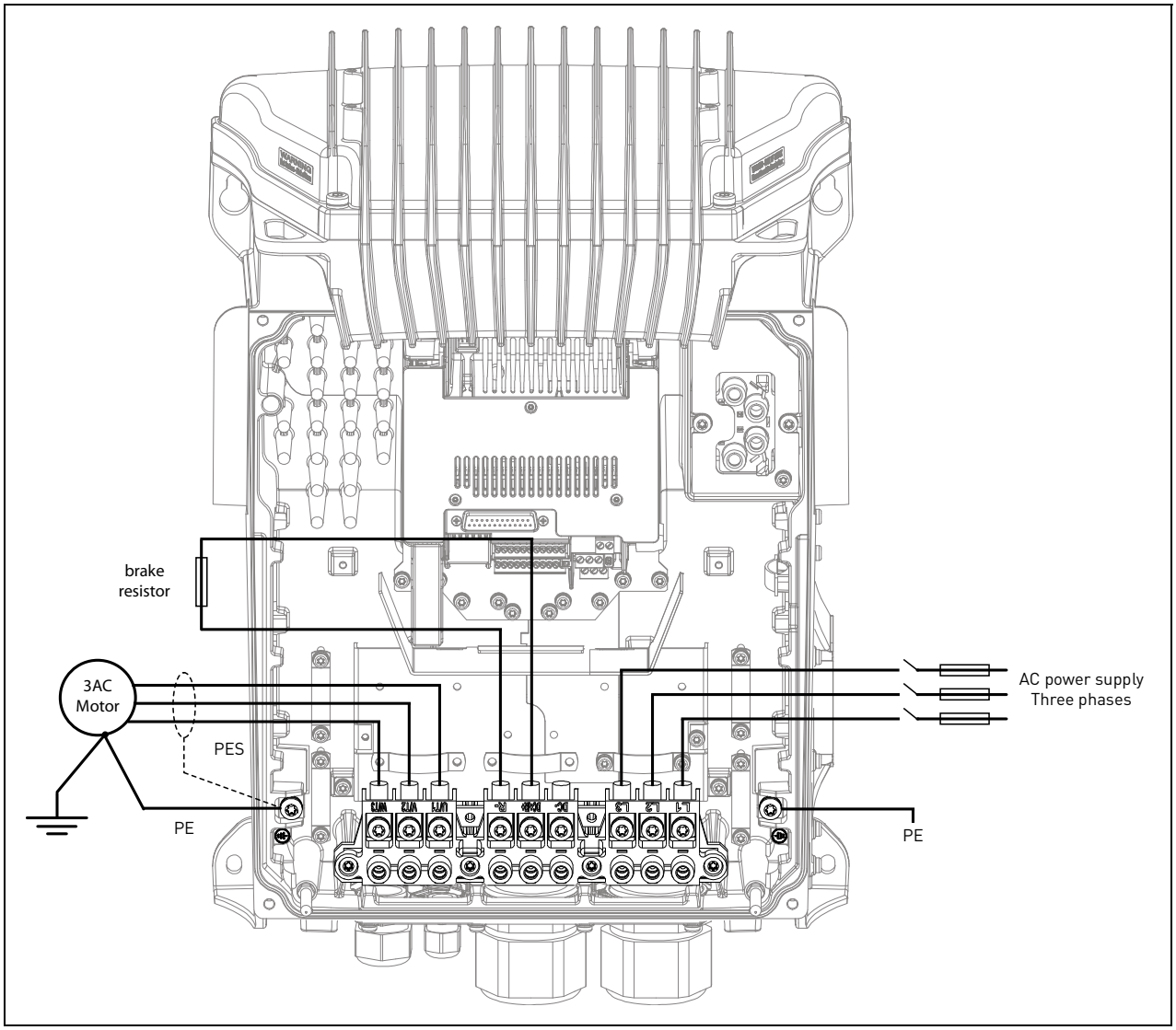

Figure 21. Power connections, MM6.

Terminal	Description
L1 L2 L3	These terminals are the input connections for the power supply.
DC- DC+/R+ R-	DC bus terminals (DC- DC+) and Brake resistor terminals (R+ R-)
U/T1 V/T2 W/T3	These terminals are for motor connections.

Table 15. Terminal description.

4.4 CABLE DIMENSIONING AND SELECTION

Table 16 and Table 17 show the minimum dimensions of the Cu-cables and the corresponding fuse sizes.

These instructions apply only to cases with one motor and one cable connection from the AC drive to the motor. In any other case, ask the factory for more information.

4.4.1 CABLE AND FUSE SIZES, FRAMES MM4 TO MM6

The recommended fuse type is gG/gL (IEC 60269-1). The fuse voltage rating should be selected according to the supply network. The final selection should be made according to local regulations, cable installation conditions and cable specification. Bigger fuses than those recommended below shall not be used.

Check that the fuse operating time is less than 0.4 seconds. Operating time depends on used fuse type and impedance of the supply circuit. Consult the factory about faster fuses. VACON® also recommends high speed gS (IEC 60269-4) fuse ranges.

Frame	Type	I_{INPUT} [A]	Fuse (gG/gL) [A]	Mains and motor cable Cu [mm²]	Terminal cable size	
					Main terminal [mm²]	Earth terminal [mm²]
MM4	0003 4 - 0004 4 0003 5 - 0004 5	3.4 - 4.6	6	3*1.5+1.5	0.5—10 solid 0.5—6 stranded	M4 ring terminal or 1—6
	0007 2 - 0008 2 0005 4 - 0008 4 0005 5 - 0008 5	6.0 - 7.2 5.4 - 8.1	10	3*1.5+1.5	0.5—10 solid 0.5—6 stranded	M4 ring terminal or 1—6
	0011 2 - 0012 2 0009 4 - 0012 4 0009 5 - 0012 5	9.7 - 10.9 9.3 - 11.3	16	3*2.5+2.5	0.5—10 solid 0.5—6 stranded	M4 ring terminal or 1—6
MM5	0018 2 0016 4 0016 5	16.1 15.4	20	3*6+6	0.5—16 solid or stranded	M5 ring terminal or 1—10
	0024 2 0023 4 0023 5	21.7 21.3	25	3*6+6	0.5—16 solid or stranded	M5 ring terminal or 1—10
	0031 2 0031 4 0031 5	27.7 28.4	32	3*10+10	0.5—16 solid or stranded	M5 ring terminal or 1—10
MM6	0038 4 0038 5	36.7	40	3*10+10	M6 ring terminal	M6 ring terminal
	0048 2 0046 4 0046 5	43.8 43.6	50	3*16+16	M6 ring terminal	M6 ring terminal
	0062 2 0061 4 0061 5	57.0 58,2	63	3*25+16	M6 ring terminal	M6 ring terminal
	0072 4 0072 5	67.5	80	3*35+16	M6 ring terminal	M6 ring terminal

Table 16. Cable and fuse sizes for VACON® *100 X.*

The terminal sizes are intended for 1 conductor. For MM6, the max. diameter of the ring terminal is 14 mm. The cable dimensioning is based on the criteria of the International Standard **IEC60364-5-52**: Cables must be PVC-isolated; Max number of parallel cables is 9.

When using cables in parallel, **NOTE HOWEVER** that the requirements of both the cross-sectional area and the max number of cables must be observed.
For important information on the requirements of the earthing conductor, see chapter Earthing and earth fault protection of the standard.
For the correction factors for each temperature, see International Standard **IEC60364-5-52**.

4.4.2 Cable and fuse sizes, frames MM4 to MM6, North America

The recommended fuse type is class T (UL & CSA). The fuse voltage rating should be selected according to the supply network. The final selection should be made according to local regulations, cable installation conditions and cable specification. Bigger fuses than those recommended below shall not be used.

Check that the fuse operating time is less than 0.4 seconds. Operating time depends on used fuse type and impedance of the supply circuit. Consult the factory about faster fuses. VACON® also recommends high speed J (UL & CSA) fuse ranges.

Frame	Type	I_{INPUT} [A]	Fuse (class T) [A]	Mains and motor cable Cu	Terminal cable size	
					Main terminal	Earth terminal
MM4	0003 4 - 0004 4 0003 5 - 0004 5	3.4 - 4.6	6	AWG14	AWG24-AWG10	AWG17-AWG10 M4 ring terminal
	0007 2 - 0008 2 0005 4 - 0008 4 0005 5 - 0008 5	6.0 - 7.2 5.4 - 8.1	10	AWG14	AWG24-AWG10	AWG17-AWG10 M4 ring terminal
	0011 2 0009 4 0009 5	9.7 9.3	15	AWG14	AWG24-AWG10	AWG17-AWG10 M4 ring terminal
	0012 2 0012 4 0012 5	10.9 11.3	20	AWG14	AWG24-AWG10	AWG17-AWG10 M4 ring terminal
MM5	0018 2 0016 4 0016 5	16.1 15.4	25	AWG10	AWG20-AWG5	AWG17-AWG8 M5 ring terminal
	0024 2 0023 4 0023 5	21.7 21.3	30	AWG10	AWG20-AWG5	AWG17-AWG8 M5 ring terminal
	0031 2 0031 4 0031 5	27.7 28.4	40	AWG8	AWG20-AWG5	AWG17-AWG8 M5 ring terminal
MM6	0038 4 0038 5	36.7	50	AWG4	AWG13-AWG0 M6 ring terminal	AWG13-AWG2 M6 ring terminal
	0048 2 0046 4 0046 5	43.8 43.6	60	AWG4	AWG13-AWG0 M6 ring terminal	AWG13-AWG2 M6 ring terminal
	0062 2 0061 4 0061 5	57.0 58,2	80	AWG4	AWG13-AWG0 M6 ring terminal	AWG13-AWG2 M6 ring terminal
	0072 4 0072 5	67.5	100	AWG2	AWG9-AWG2/0 M6 ring terminal	AWG9-AWG2/0 M6 ring terminal

Table 17. Cable and fuse sizes for VACON® *100 X.*

The cable dimensioning is based on the criteria of the **Underwriters' Laboratories UL508C**:Cables must be PVC-isolated; Max ambient temperature +40 °C (104 °F), max temperature of cable surface +70/+75 °C (158/167 °F); Use only cables with concentric copper shield; Max number of parallel cables is 9.

When using cables in parallel, **NOTE HOWEVER** that the requirements of both the cross-sectional area and the max number of cables must be observed.

For important information on the requirements of the earthing conductor, see standard Underwriters' Laboratories UL508C.

For the correction factors for each temperature, see the instructions of standard **Underwriters' Laboratories UL508C**.

4.4.3 Brake resistor cables

VACON® 100 X AC drives are equipped with terminals for an optional external brake resistor. These terminals are marked with **DC+/R+** and **R-**. See Table 31 and Table 32 for the resistor ratings.

4.4.4 Control cables

For information on control cables see chapter Control unit.

4.5 CABLE INSTALLATION

- Before starting, check that none of the components of the AC drive is live. Read carefully the warnings in chapter 1.
- Place the motor cables sufficiently far from other cables
- Avoid placing the motor cables in long parallel lines with other cables.
- If the motor cables run in parallel with other cables note the minimum distances between the motor cables and other cables given in table below.

Distance between cables, [m]	Shielded cable, [m]
0.3	≤ 50
1.0	≤ 200

- The given distances also apply between the motor cables and signal cables of other systems.
- The **maximum lengths of motor cables** (shielded) are 100 m (MM4) and 150 m (MM5 and MM6).
- The motor cables should cross other cables at an angle of 90 degrees.
- If cable insulation checks are needed, see chapter Cable and motor insulation checks.

Start the cable installation according to the instructions below:

1	Strip the motor and mains cables as recommended below.

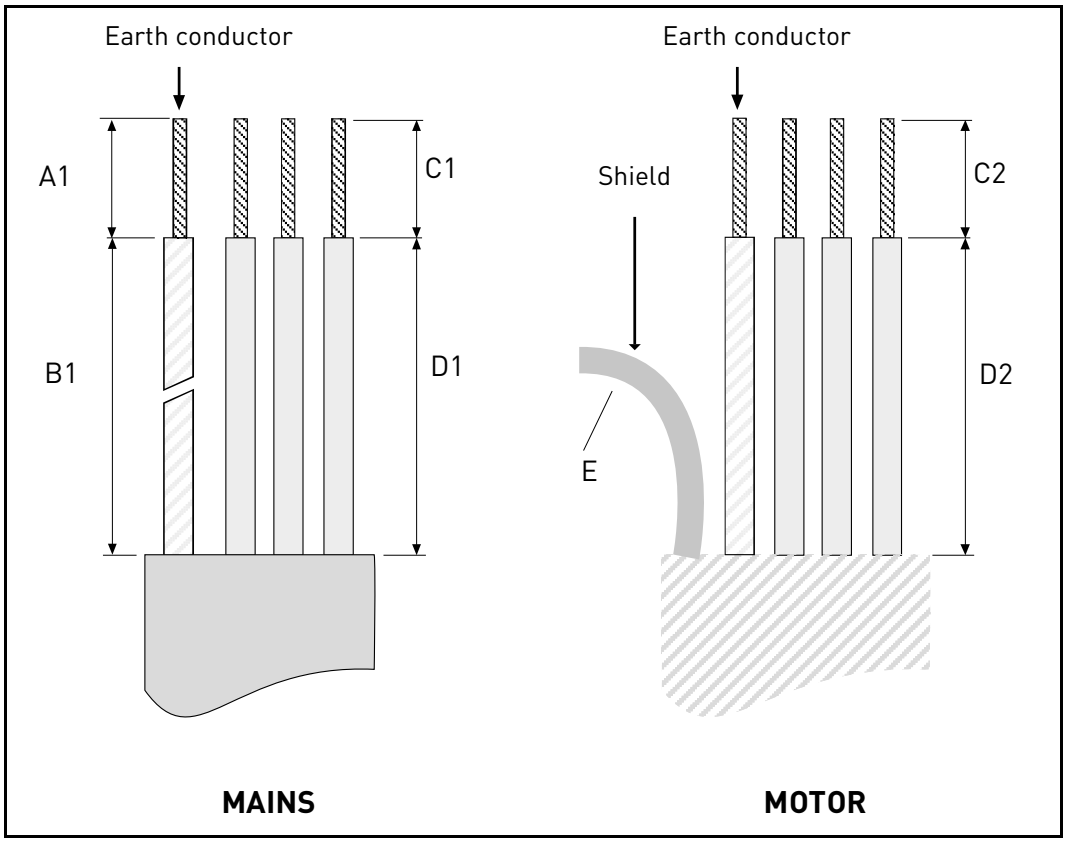

Figure 22. Stripping of cables.

Frame	A1	B1	C1	D1	C2	D2	E
MM4	15	70	10	30	7	30	as short as possible
MM5	20	70	10	40	10	40	
MM6	20	90	15	60	15	60	

Table 18. Cables stripping lengths [mm].

IEC installation:

2	• Remove the cable entry plate. The cable entry system is a combination of a cable entry plate (see the figure below) and cable glands. In the cable entry plate there are several openings available for the cables with ISO metric thread. • Open only the inlet holes where you need to run the cables.
3	• Choose the correct cable glands according to drive and cable size as shown in the following pictures.

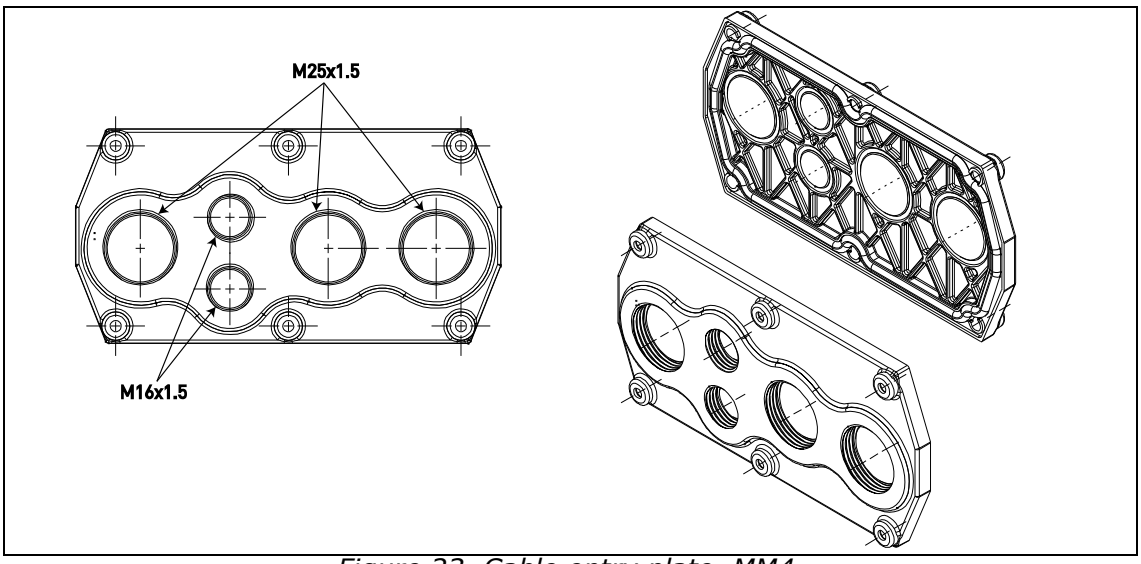

Figure 23. Cable entry plate, MM4.

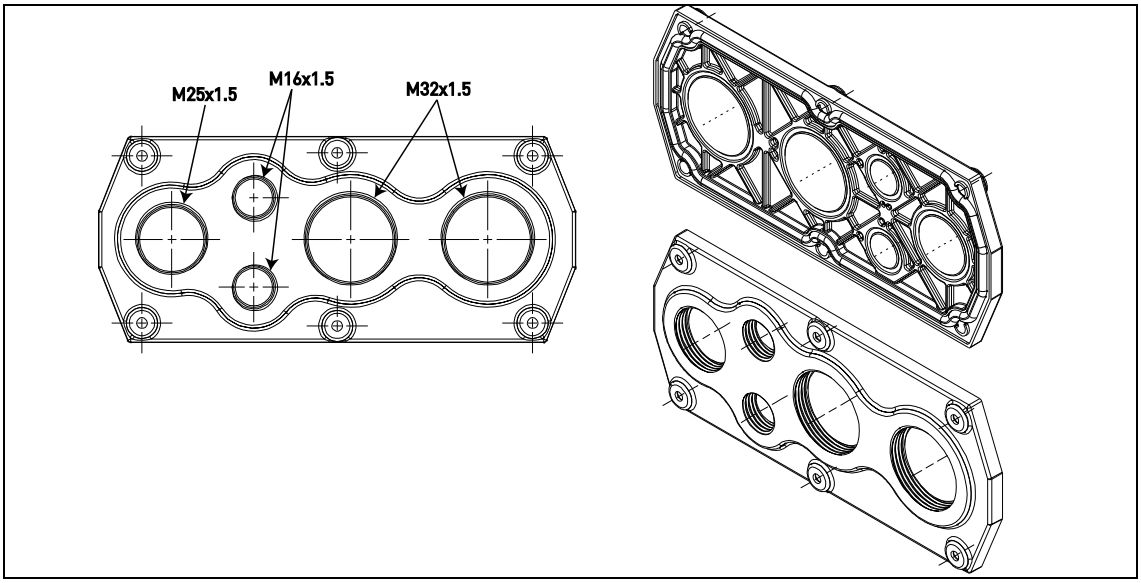

Figure 24.Cable entry plate, MM5.

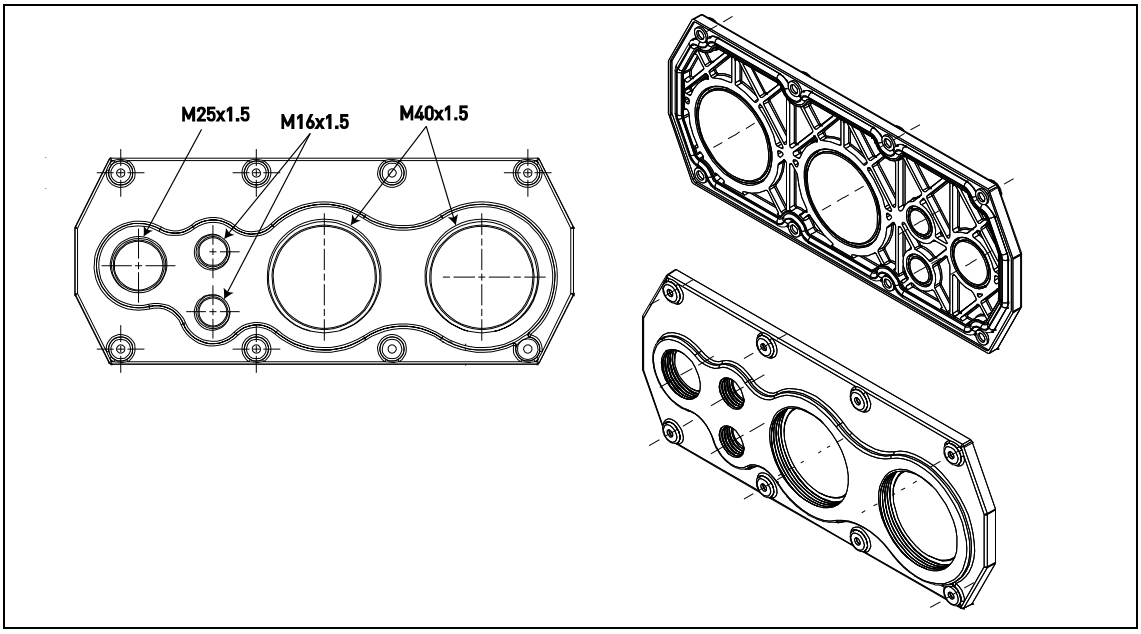

Figure 25.Cable entry plate, MM6.

4	• Cable glands must be made of plastic materials. They are used for sealing cables passing through cable entries to ensure the characteristics of the enclosure.

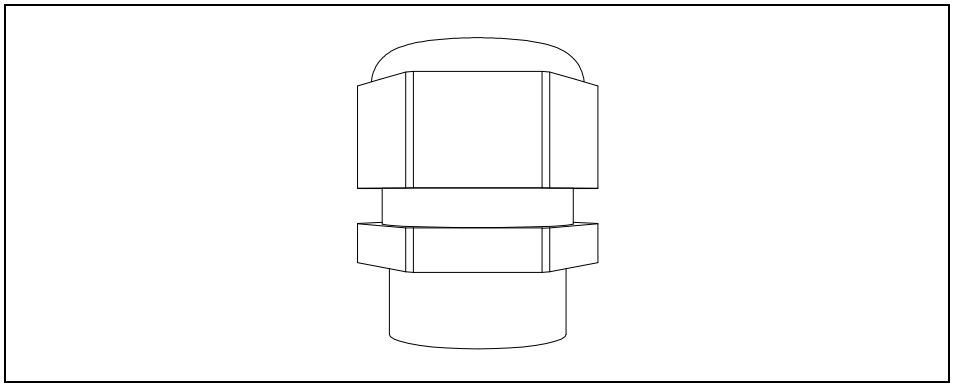

Figure 26.Cable gland.

Plastic cable glands are recommend. If metal cable glands are needed, all insulation system requirements and all protective earthing requirements have to be fulfilled in accordance with the national electrical regulations and IEC 61800-5-1.

5	• Screw the cable glands on the cable entry holes using the proper tightening torque as shown in Table 19.

Tightening torques of cable glands:

Frame	Gland screw type [metric]	Tightening torque [Nm]/[lb-in.]	
		[Nm]	lb-in.
MM4	M16	1.0	8.9
	M25	4.0	35.5
MM5	M16	1.0	8.9
	M25	4.0	35.5
	M32	7.0	62.1
MM6	M16	1.0	8.9
	M25	4.0	35.5
	M40	10.0	88.7

Table 19. Tightening torque and dimension of cable glands.

UL installation:

6	• To connect NPT pipes to Vacon®100X, use the optional metal cable entry plate (included in -R02 option) to meet UL installation rules. • One metal conduit plate with accessories (screws and gasket) is delivered in a separate bag together with the drive. See the following figures for more details.

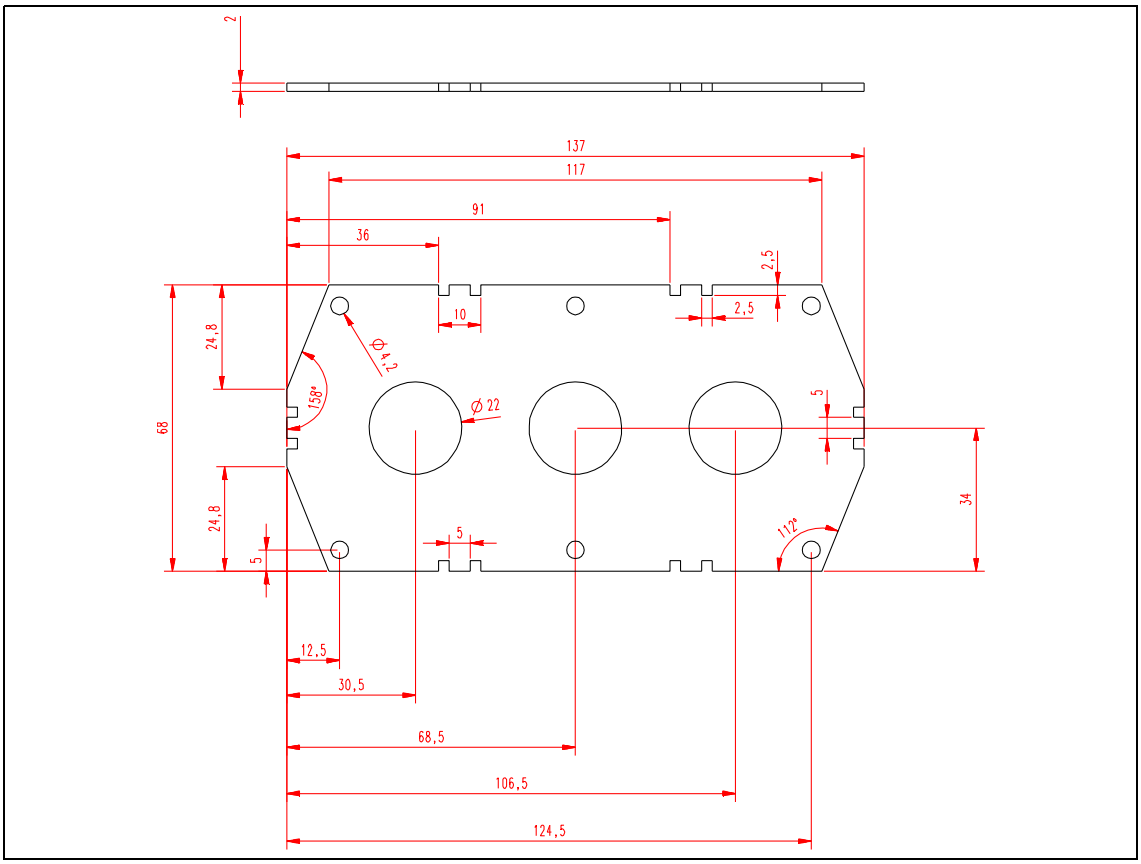

Figure 27.Cable entry plate, MM4 UL installation.

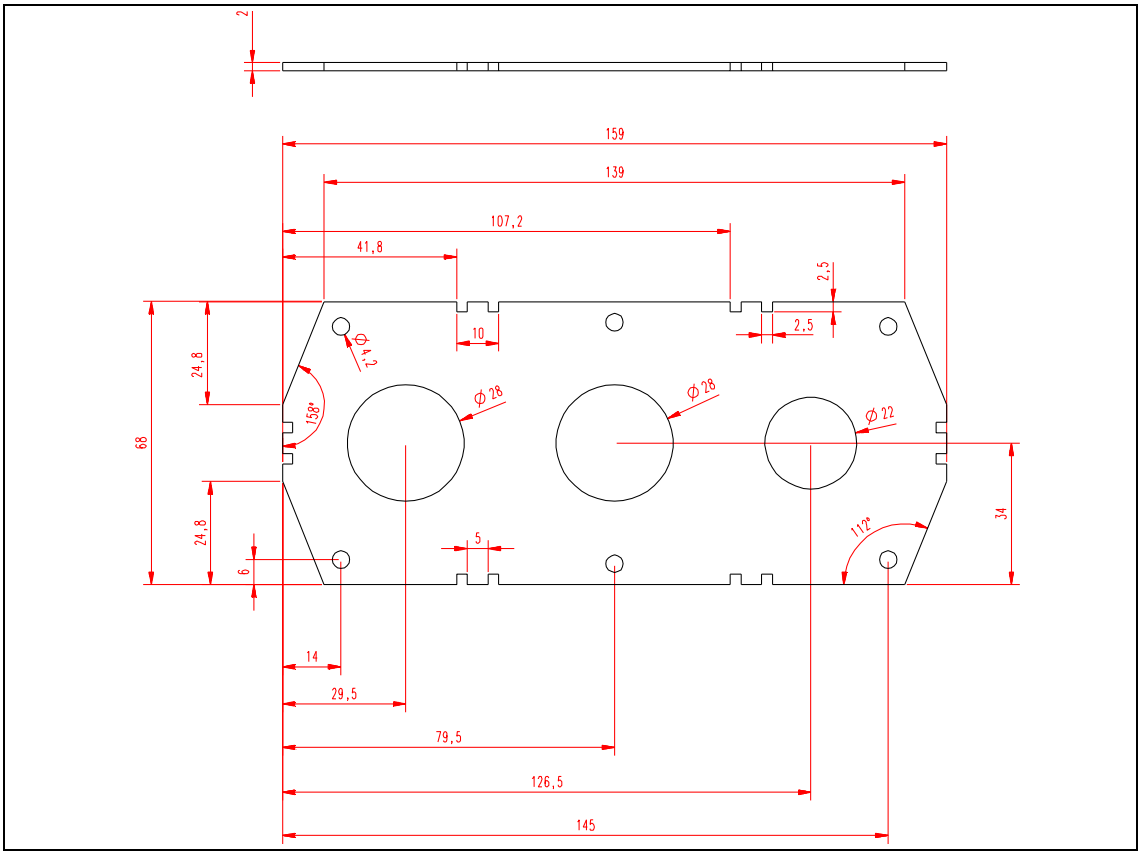

Figure 28.Cable entry plate, MM5 UL installation.

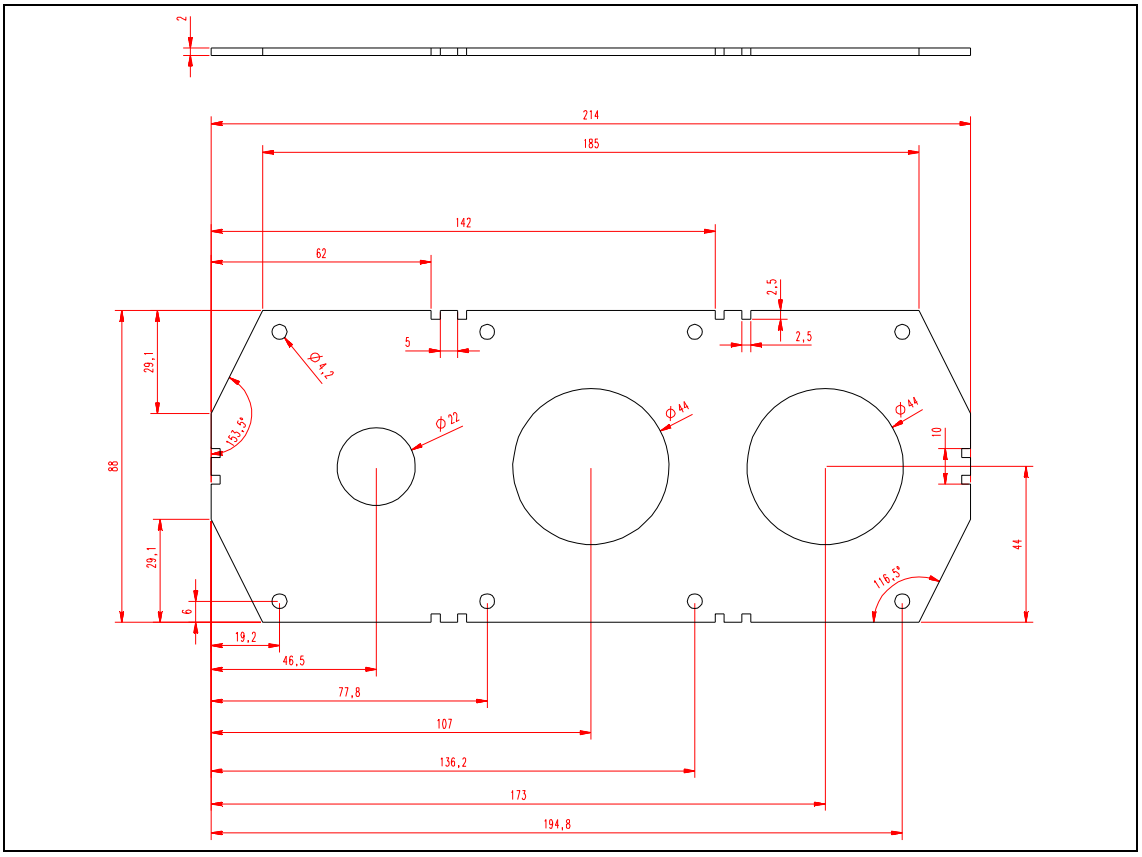

Figure 29.Cable entry plate, MM6 UL installation.

7	• All the (3) terminal box openings are closed with the standard plastic plates with the metric threads.
8	• The metal cable entry plate for UL installation has to be installed in place of one of standard plastic cable entries provided with the default package. The metal cable entry plate has three not-threaded openings: input line, motor and I/Os and can be mounted only on left or right-hand side of the drive.
9	• Flexible or rigid cable conduit can be used. • Use proper fittings to join and terminate rigid conduit tubing, and protect it from damage too. • The proper selection of electrical conduit materials, fittings, and installation are important for safe electrical wiring.
10	• Setscrew fittings are commonly used with conduit; they provide weather tight joints that are firm to keep the IP degree of the drive.

Cable installation:

11	• Pass the cables (supply cable, motor cable, brake cable and I/O cables) through the conduits (UL connections) or through the cable glands (IEC connections) and cable entries.
12	• Detach the cable clamps and the grounding clamps.
13	Connect the stripped cables: • Expose the shield of both cables in order to make a 360-degree connection with the cable clamp (reverse the shield over the plastic cover of the cable and fix all together). • Connect the phase conductors of the supply and motor cables into their respective terminals. • Form the rest of the cable shield of both cables into "pigtails" and make a grounding connection with the clamp. Make the pigtails just long enough to reach and be fixed to the terminal - no longer.

Tightening torques of cable terminals:

Frame	Type	Tightening torque [Nm]/[lb-in.] Power and motor terminals		Tightening torque [Nm]/[lb-in.] EMC grounding clamps		Tightening torque, [Nm]/[lb-in.] Grounding terminals	
		[Nm]	lb-in.	[Nm]	lb-in.	[Nm]	lb-in.
MM4	0007 2 - 0012 2 0003 4 - 0012 4 0003 5 - 0012 5	1.2—1.5	10.6—13.3	1.5	13.3	2.0	17.7
MM5	0018 2 - 0031 2 0016 4 - 0031 4 0016 5 - 0031 5	1.2—1.5	10.6—13.3	1.5	13.3	2.0	17.7
MM6	0048 2 - 0062 2 0038 4 - 0072 4 0038 5 - 0072 5	4—5	35.4—44.3	1.5	13.3	2.0	17.7

Table 20. Tightening torques of terminals.

14	• Check the connection of the earth cable to the motor and the AC drive terminals marked with ⏚.

5. CONTROL UNIT

Remove the powerhead of the drive to reveal the terminal box with the control terminals.

The control unit of the AC drive consists of the control board and additional boards (option boards) connected to the slot connectors of the control board. The locations of boards, terminals and switches are presented in Figure 30 below.

Number	Meaning
1	Control terminals 1-11 (see chapter 5.1.2)
2	Control terminals 12-30, A-B (see chapter 5.1.2)
3	Relay terminals (see chapter 5.1.2)
4	Thermistor input (see chapter 5.1.2)
5	STO terminals
6	Dip switches
7	Ethernet terminal (see chapter chapter 5.2.1)
8	Option boards

Table 21. Locations of components in control unit.

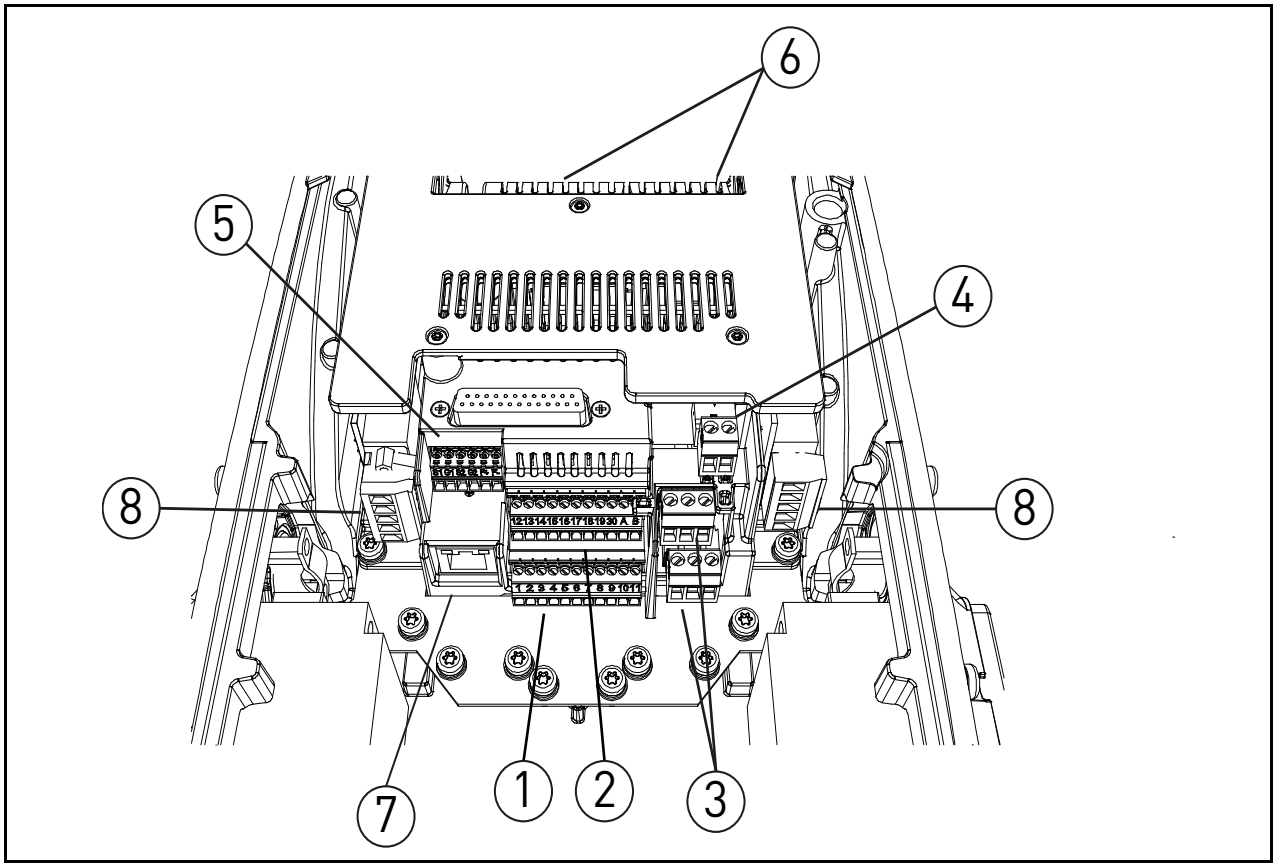

Figure 30. Locations of components in control unit.

When delivered from the factory, the control unit of the AC drive contains the standard controlling interface - the control and relay terminals of the control unit - unless otherwise specifically ordered. On the next pages you will find the arrangement of the control I/O and the relay terminals, the general wiring diagram and the control signal descriptions.

The control board can be powered externally (+24VDC, max. 1000mA, ±10%) by connecting the external power source to terminal #30, see chapter 5.1.2. This voltage is sufficient for parameter setting and for keeping the control unit active. Note however that the measurements of the main circuit (e.g. DC-link voltage, unit temperature) are not available when the mains is not connected.

5.1 CONTROL UNIT CABLING

The principal terminal block placement is presented in Figure 31 below. The control board is equipped with 22 fixed control I/O terminals and the relay board with 6+2. Additionally, the terminals for the Safe Torque Off (STO) function (see chapter chapter 9.) can be seen in the picture below. All signal descriptions are also given in Table 23.

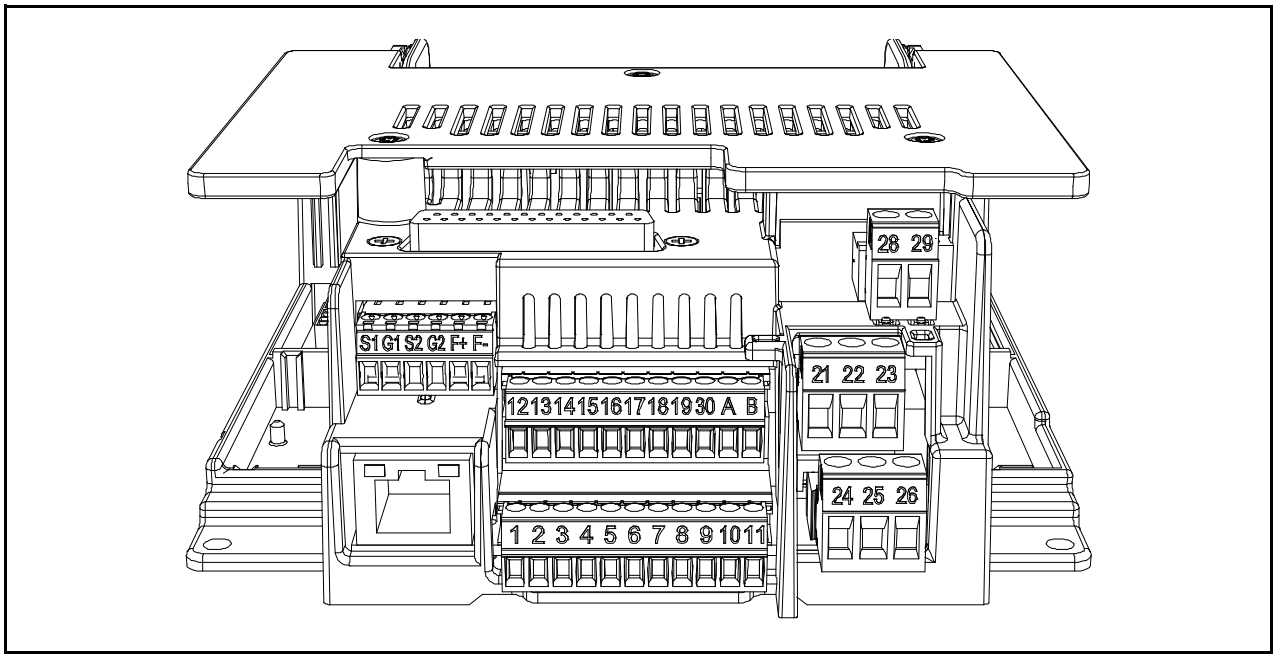

Figure 31. Control terminals.

5.1.1 CONTROL CABLE SIZING

The control cables shall be at least 0.5 mm² screened multicore cables, see Table 22. The maximum terminal wire size is 2.5 mm² for the relay terminals and 1.5 mm² for other terminals.

Find the tightening torques of the control and relay board terminals in Table 22.

Terminal screw	Tightening torque	
	Nm	lb-in.
I/O terminals and STO terminals (screw M2)	0.5	4.5
Relay terminals (screw M3)	0.5	4.5

Table 22. Control cable tightening torques.

5.1.2 STANDARD I/O TERMINALS

The terminals of the *Standard I/Os* and the *Relays* are described below. For more information on the connections, see chapter 7.

The terminals shown on shadowed background are assigned for signals with optional functions selectable with DIP switches. See more information in chapter 5.1.5 and in chapter 5.1.6.

Table 23. Control I/O terminal signals and connection example.

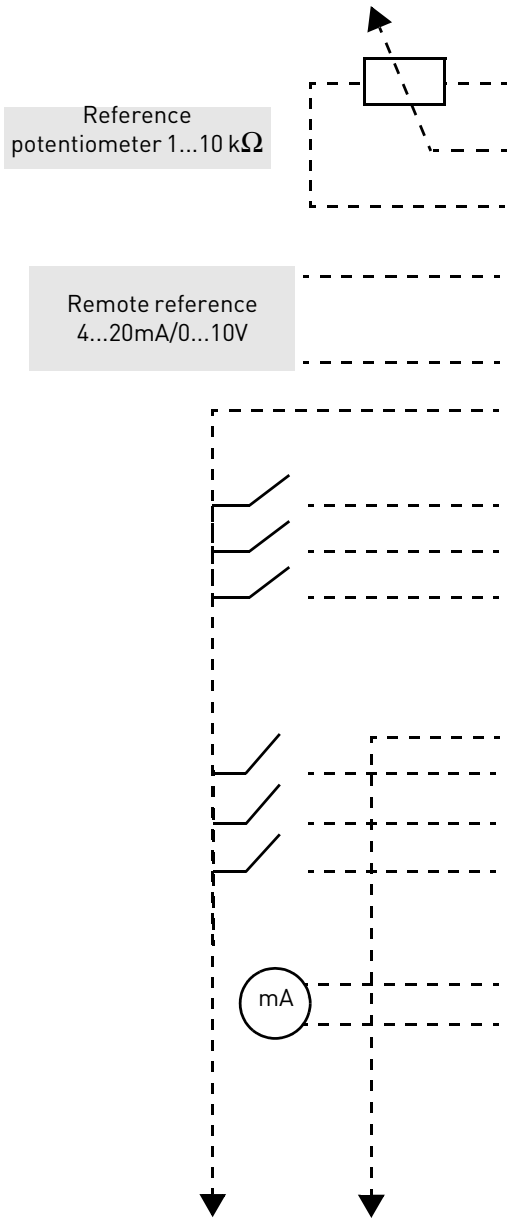

Standard I/O		
Terminal		**Signal**
1	+10 Vref	Reference output
2	AI1+	Analogue input, voltage or current
3	AI1-	Analogue input common
4	AI2+	Analogue input, voltage or current
5	AI2-	Analogue input common
6	24Vout	24V aux. voltage
7	GND	I/O ground
8	DI1	Digital input 1
9	DI2	Digital input 2
10	DI3	Digital input 3
11	CM	Common for DI1-DI6*
12	24Vout	24V aux. voltage
13	GND	I/O ground
14	DI4	Digital input 4
15	DI5	Digital input 5
16	DI6	Digital input 6
17	CM	Common for DI1-DI6*
18	AO1+	Analogue output, voltage or current
19	AO-/GND	Analogue output common
30	+24 Vin	24V auxiliary input voltage
A	RS485	Serial bus, negative
B	RS485	Serial bus, positive

*. Can be isolated from ground, see chapter chapter 5.1.6.

5.1.3 RELAY AND THERMISTOR INPUT TERMINALS

Table 24. I/O terminal signals for relay and thermistor terminals and connection example.

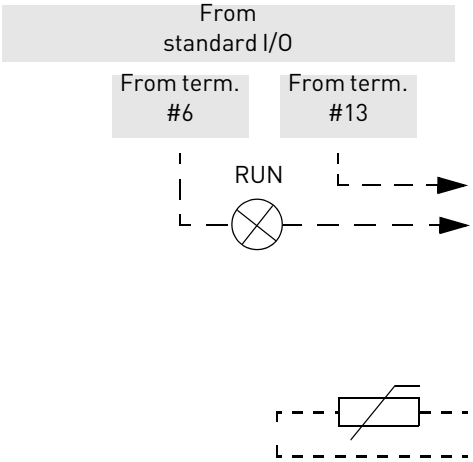

Relays and thermistor		
Terminal		**Signal**
21	RO1/1	Relay output 1
22	RO1/2	
23	RO1/3	
24	RO2/1	Relay output 2
25	RO2/2	
26	RO2/3	
28	TI1+	Thermistor input
29	TI1-	

5.1.4 SAFE TORQUE OFF (STO) TERMINALS

For more information on the functionalities of the Safe Torque Off (STO), see chapter 9.

Table 25. I/O terminal signals for the STO functions.

Safe Torque Off terminals	
Terminal	**Signal**
S1	Isolated digital input 1 (inter-changeable polarity); +24V ±20% 10...15mA
G1	
S2	Isolated digital input 2 (inter-changeable polarity); +24V ±20% 10...15mA
G2	
F+	Isolated feedback (CAUTION! Polarity to be respected); +24V ±20%
F-	Isolated feedback (CAUTION! Polarity to be respected); GND

5.1.5 SELECTION OF TERMINAL FUNCTIONS WITH DIP SWITCHES

The VACON® 100 X drive embodies five so-called *dip switches* that allow for three functional selections each. The shadowed terminals in Table 23 can be functionally modified with the dip switches. The switches have three positions: C, 0 and V. The switch in the position "C" means that the input or the output has been set in current mode. The switch in the position "V" means voltage mode.The middle position "0" is for *Test mode*. See Figure 32 to locate the switches and make appropriate selections for your requirements. Factory defaults are: AI1 = V; AI2 = C, AO = C.

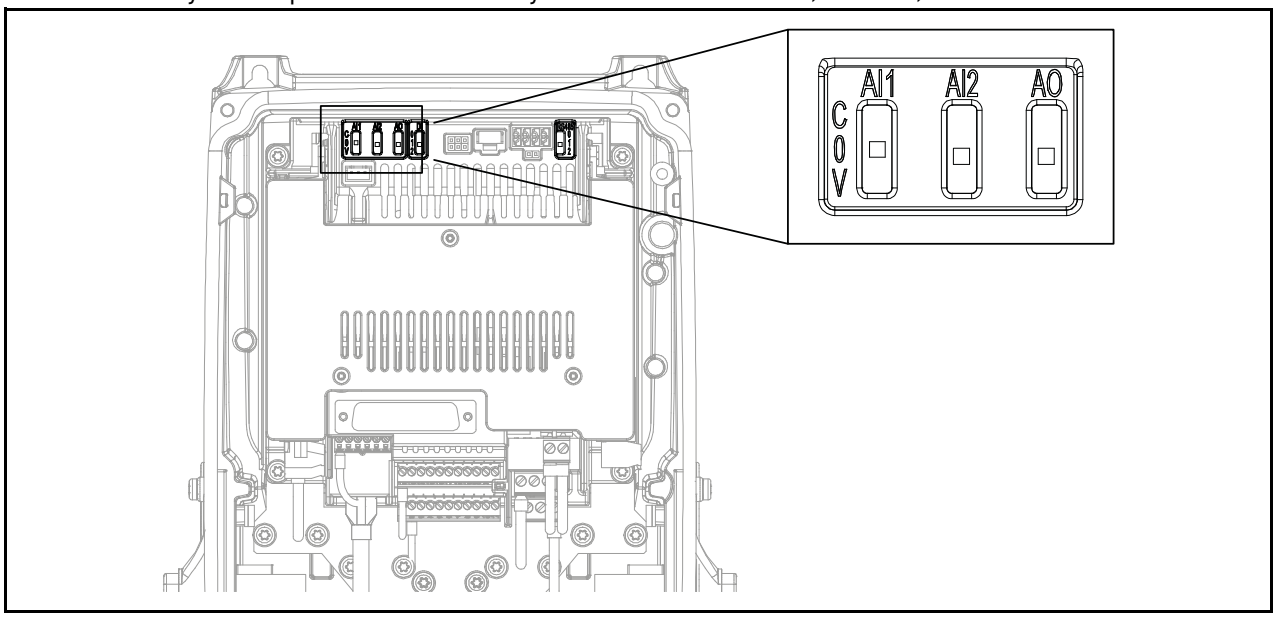

Figure 32. Dip switches for analogue inputs and analogue output.

5.1.6 ISOLATING DIGITAL INPUTS FROM GROUND

The digital inputs (terminals 8-10 and 14-16) on the standard I/O board can be **isolated** from ground by setting the *dip switch* to position '0'. The switch in the position "1" means that the common of digital input has been connected to 24 V (negative logic). The switch in the position "2" means that the common of digital inputs has been connected to ground (positive logic). See Figure 33. Locate the switch and set it in desired position. Factory default is 2.

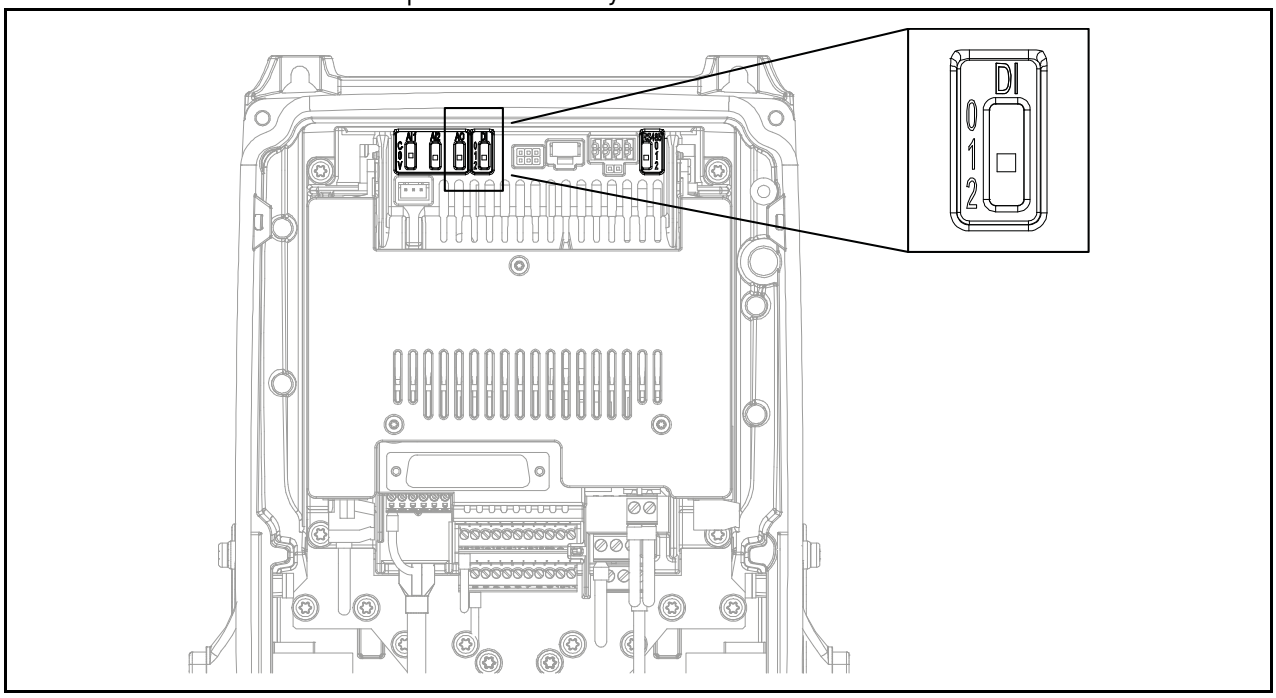

Figure 33. Digital inputs dip switch.

5.1.7 Bus termination of the RS485 connection

This dip switch is related to the RS485 connection. It's used for bus termination. The bus termination must be set to the first and to the last device on the network. This switch in position "0" means that a termination resistor of 120 ohm is connected and the termination of the bus has been set. This switch in the position "1" means that a pull-up and a pull-down resistors of 10 kOhm have been connected for biasing purpose. The switch in the position "2" means no termination and no biasing resistors have been connected. Factory default is 2. See Figure 34.

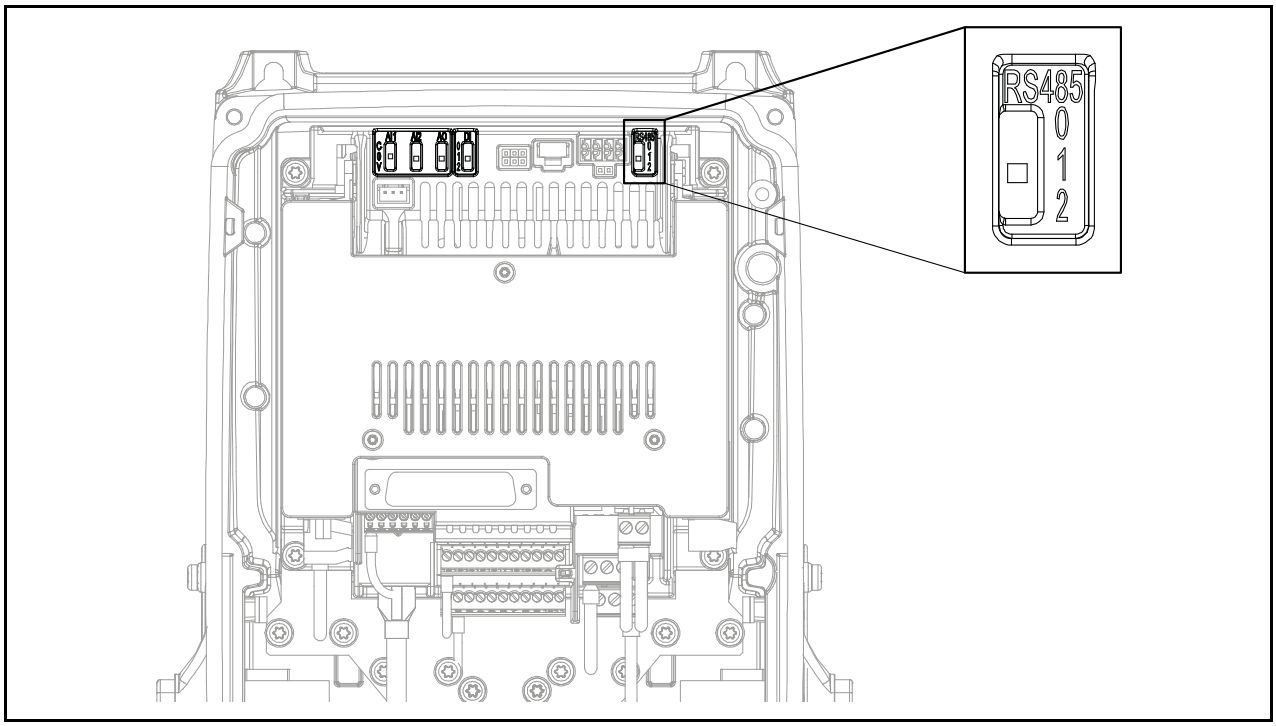

Figure 34. RS485 dip switch.

5.2 I/O CABLING AND FIELDBUS CONNECTION

The AC drive can be connected to fieldbus either through RS485 or Ethernet. The connection for RS485 is on the standard I/O terminals (A and B) and the connection for Ethernet is left to the control terminals. See Figure 35.

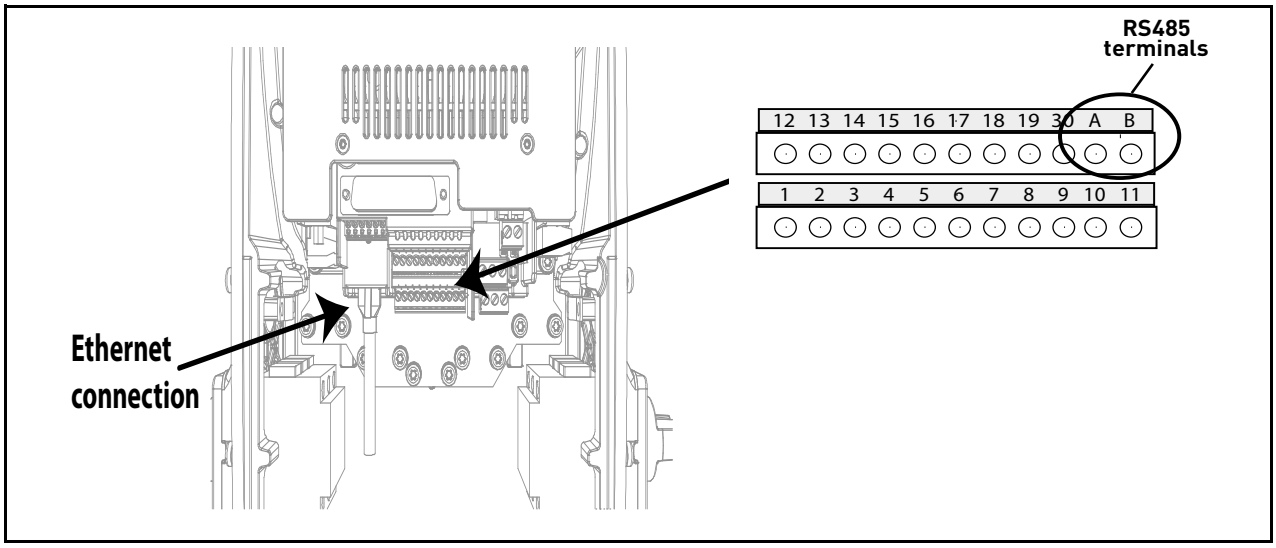

Figure 35.

5.2.1 PREPARE FOR USE THROUGH ETHERNET

1	Connect the Ethernet cable (see specification on page 52) to its terminal and run the cable through the conduit plate.
2	Remount the powerhead. **NOTE:** When planning the cable runs, remember to keep the distance between the Ethernet cable and the motor cable at a **minimum of 30 cm**.

For more detailed information, see the user's manual of the fieldbus you are using.

5.2.1.1 Ethernet cable data

Connector	Shielded RJ45 connector. Note: max length of the connector 40 mm.
Cable type	CAT5e STP
Cable length	Max. 100m

Table 26. Ethernet cable data.

5.2.2 PREPARE FOR USE THROUGH RS485

1	Strip about 15 mm of the RS485 cable (see specification on page 54) and cut off the grey cable shield. Remember to do this for both bus cables (except for the last device). Leave no more than 10 mm of the cable outside the terminal block and strip the cables at about 5 mm to fit in the terminals. See picture below. 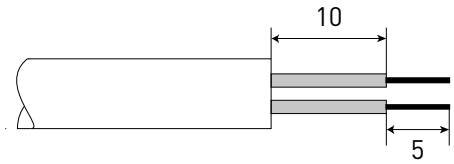 Also strip the cable now at such a distance from the terminal that you can fix it to the frame with the grounding clamp. Strip the cable at a maximum length of 15 mm. **Do not strip the aluminum cable shield!** 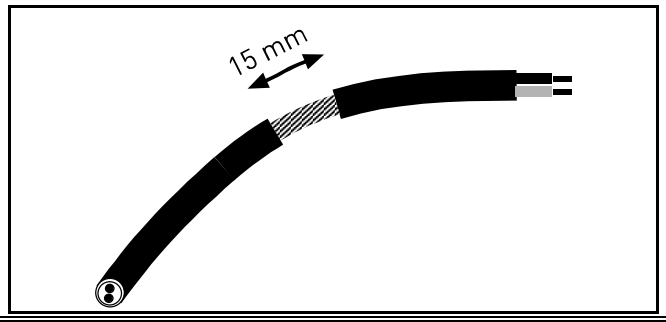

2	Then connect the cable to its appropriate terminals on VACON® 100 X AC drive standard terminal block, terminals **A and B** (A = negative, B = positive). See Figure 35.

3	Using the cable clamp included in the delivery of the drive, ground the shield of the RS485 cable to the frame of the AC drive.
4	**If VACON® 100 X AC drive is the last device on the bus**, the bus termination must be set. Locate the DIP switches to the top of the control unit (see Figure 32) and turn the right most switch to position "1". Biasing is built in the termination resistor. See also step 6. 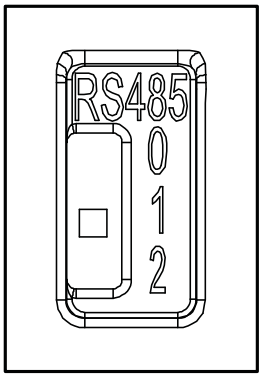
5	**NOTE:** When planning the cable runs, remember to keep the distance between the fieldbus cable and the motor cable at a **minimum of 30 cm**.

6	The bus termination must be set for the first and the last device of the fieldbus line. See picture below and step 4. We recommend that the first device on the bus and, thus, terminated, was the Master device. 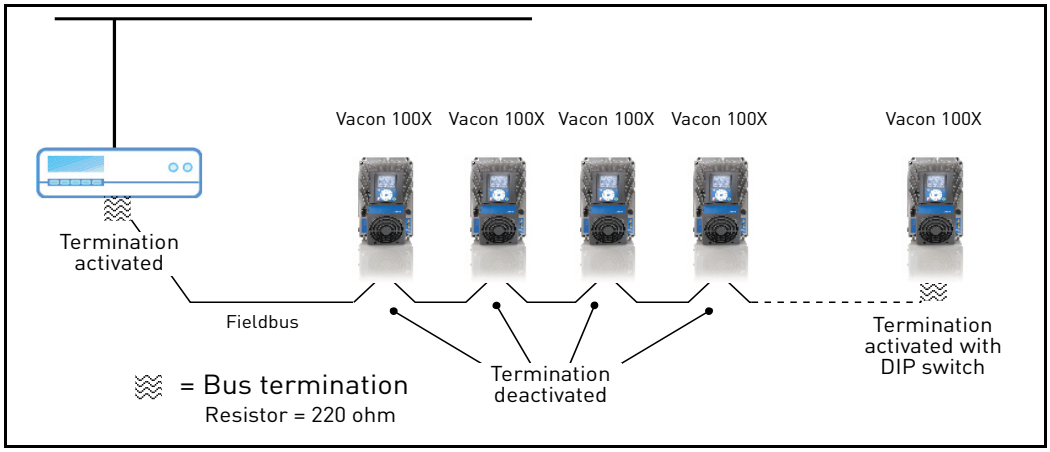

5.2.3 RS485 CABLE DATA

Connector	2.5 mm^2
Cable type	STP (Shielded Twisted Pair), type Belden 9841 or similar
Cable length	Depends on the used fieldbus. See respective bus manual.

Table 27. RS485 cable data.

5.3 BATTERY INSTALLATION FOR REAL TIME CLOCK (RTC)

Enabling the functions of the *Real Time Clock (RTC)* requires that an optional battery is installed in the VACON® 100 X drive.

Detailed information on the functions of the *Real Time Clock (RTC)* can be found in the Application Manual. See the following figures to install the battery on the control box of Vacon® 100X frequency converter.

1	Remove the three screws on the control box as shown in Figure 36.

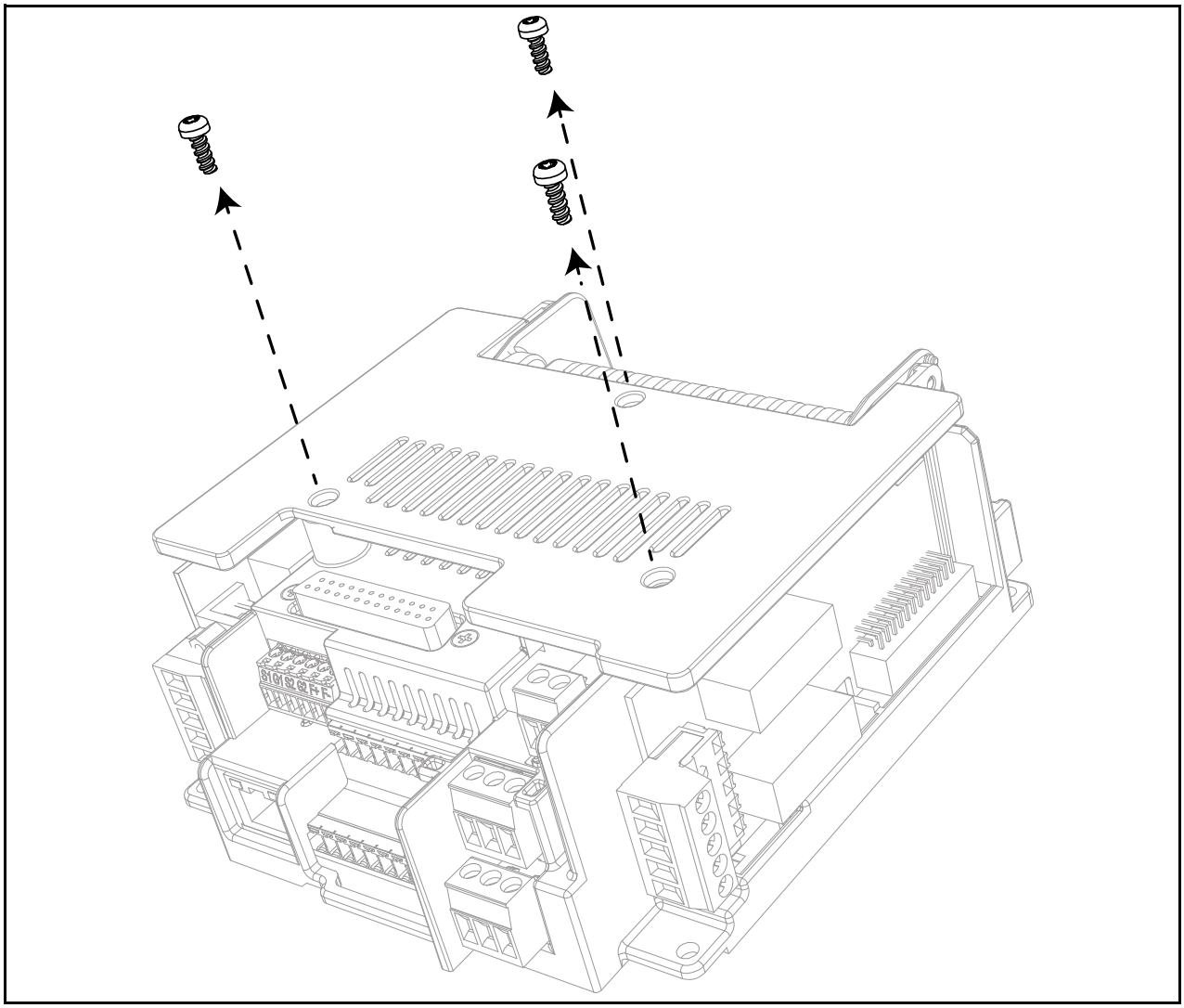

Figure 36. Remove the three screws on the control box.

2	Rotate and open the cover of the control box as shown in Figure 37.

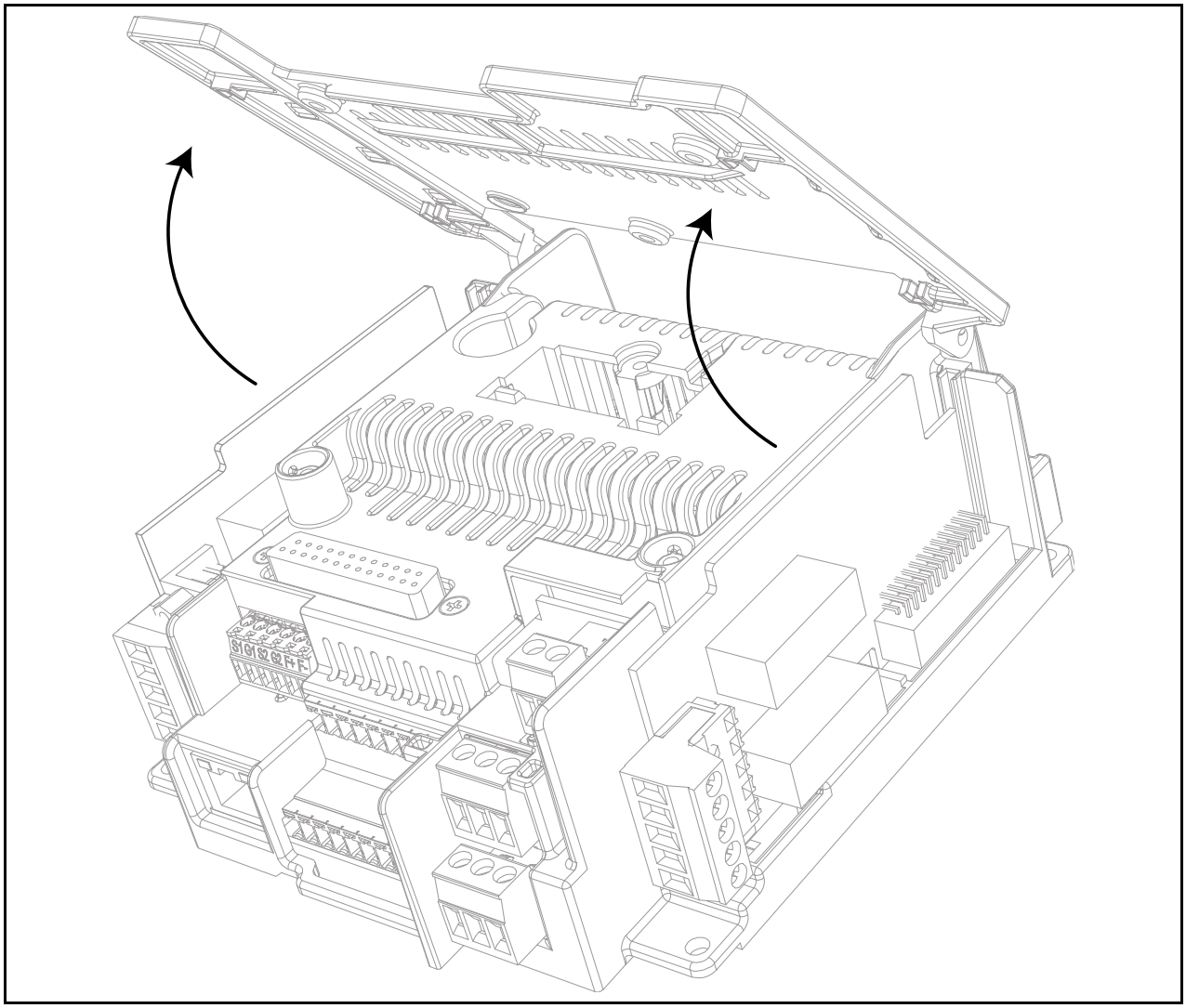

Figure 37. Open the cover of control box.

3	Install the battery in the correct place and connect it to the control box. See Figure 38 for battery location and connector.

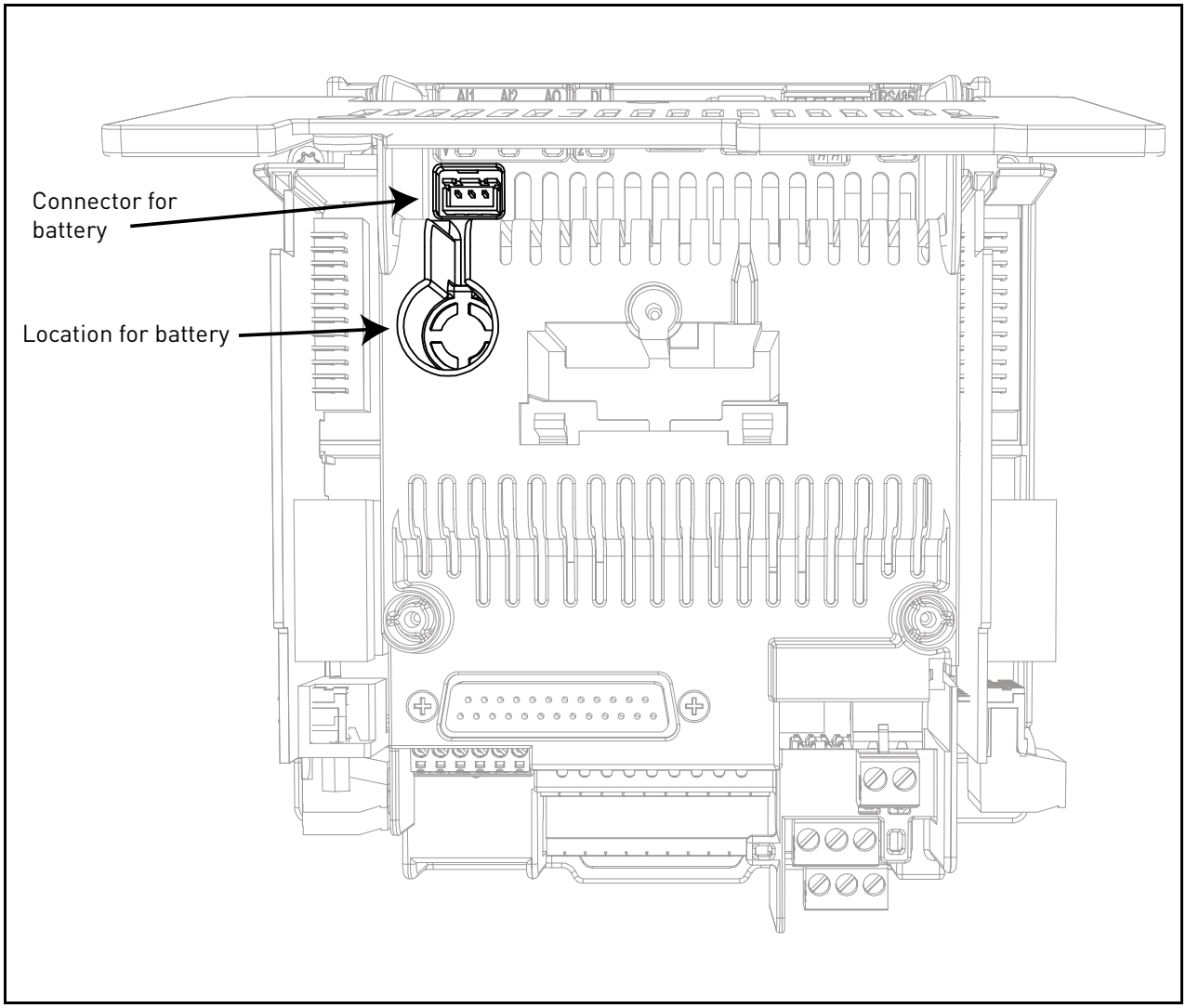

Figure 38. Location and connector for the battery on the control box.

6. COMMISSIONING

Before commissioning, note the following directions and warnings:

	Internal components and circuit boards of VACON® 100 X drive (except for the galvanically isolated I/O terminals) are live when it is connected to the mains potential. **Coming into contact with this voltage is extremely dangerous and may cause death or severe injury.**
	The motor terminals **U**, **V**, **W** and the brake resistor terminals **R-/R+ are live** when VACON® 100 X drive is connected to the mains, **even if the motor is not running**.
	The control I/O-terminals are isolated from the mains potential. However, the **relay outputs and other I/O-terminals may have a dangerous control voltage** present even when VACON® 100 X drive is disconnected from the mains.
	Do not make any connections to or from the frequency converter when it is connected to the mains.
	After disconnecting the AC drive from the mains, **wait** until the fan stops and the indicators on the powerhead go out. Wait an additional 30 seconds before doing any work on the connections of VACON®100 X Drive. Do not open the unit before this time has expired. After expiration of this time, use a measuring equipment to absolutely ensure that no voltage is present. **Always ensure absence of voltage before starting any electrical work!**
	Before connecting the AC drive to mains make sure that the powerhead VACON® 100 X Drive is mounted firmly on the terminal box.

6.1 COMMISSIONING OF THE DRIVE

Read carefully the safety instructions in Chapter 1 and above and follow them.

After the installation:

☐	Check that both the frequency converter and the motor are grounded.
☐	Check that the mains and motor cables comply with the requirements given in chapter 5.
☐	Check that the control cables are located as far as possible from the power cables.
☐	Check that the shields of the shielded cables are connected to protective earth marked with ⏚ .
☐	Check the tightening torques of all terminals.
☐	Check that the wires do not touch the electrical components of the drive.
☐	Check that the common inputs of digital input groups are connected to +24V or ground of the I/O terminal.
☐	Check the quality and quantity of cooling air.
☐	Check the inside of the frequency converter for condensation.
☐	Check that all Start/Stop switches connected to the I/O terminals are in the Stop-position.
☐	Before connecting the frequency converter to mains: Check mounting and condition of all fuses and other protective devices.
☐	Run the Startup Wizard (see the Application Manual).

6.2 CHANGING EMC PROTECTION CLASS

If your supply network is an IT (impedance-grounded) system but your AC drive is EMC-protected according to class C1 or C2 you need to modify the EMC protection of the AC drive to EMC-level T (C4). This is done by removing the EMC screws as described below:

⚠	Warning! Do not perform any modifications on the AC drive when it is connected to mains.

1	Separate the powerhead and the terminal box. Turn the powerhead upside down and remove the two screws marked in Figure 39 (for MM4), Figure 40 (for MM5) and in Figure 42(for MM6).

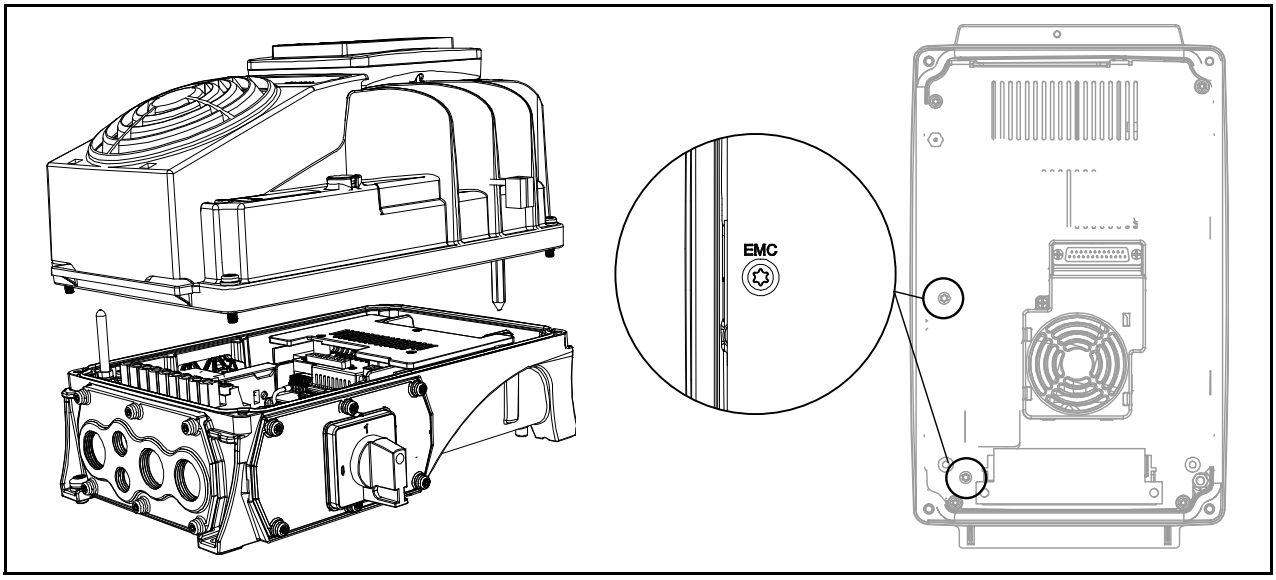

Figure 39. Locations of EMC screws in MM4.

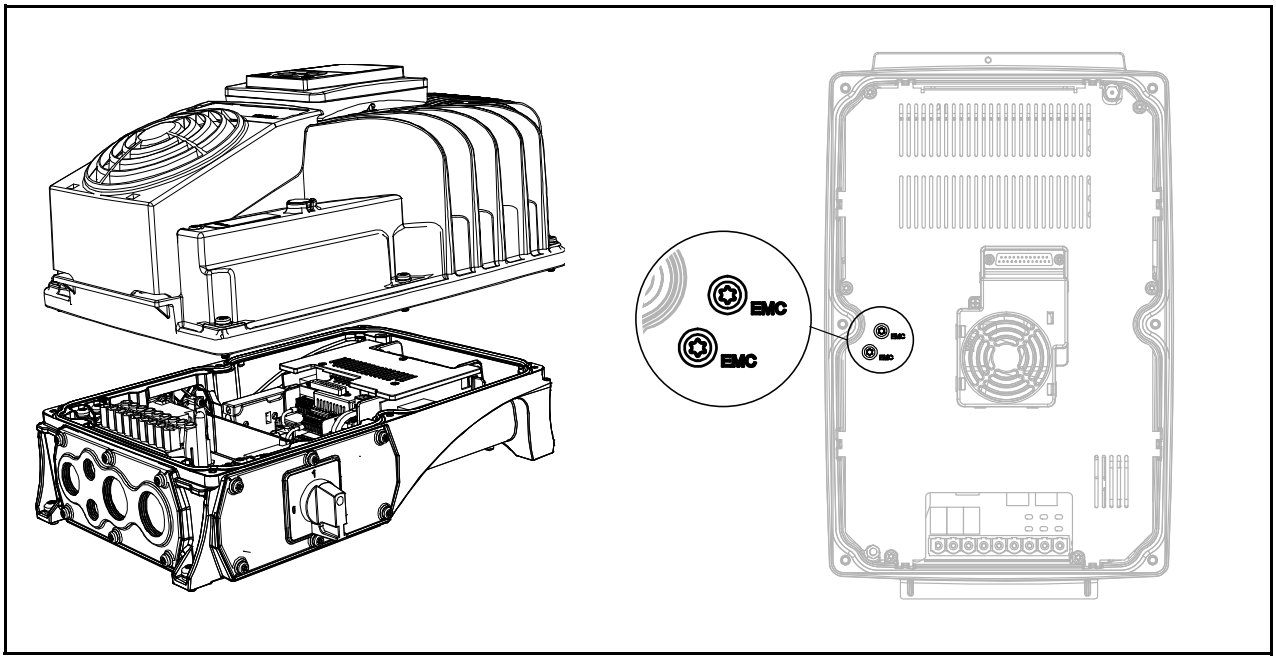

Figure 40. Locations of EMC screws in MM5.

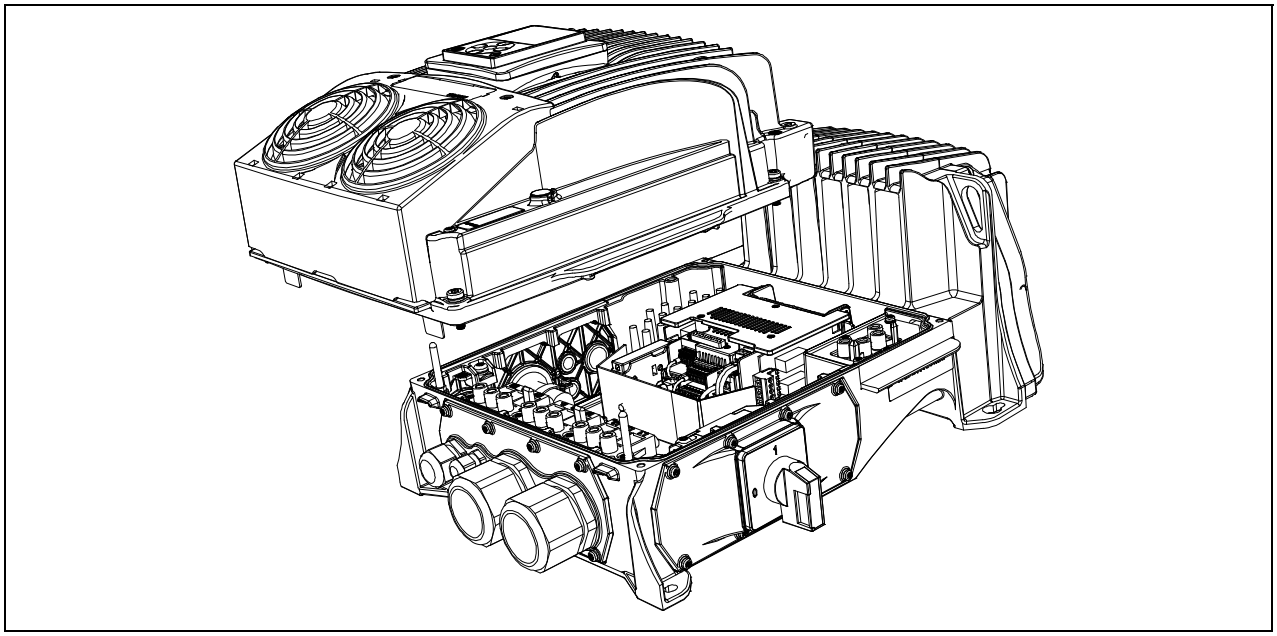

Figure 41. Powerhead separated from the terminal box in MM6.

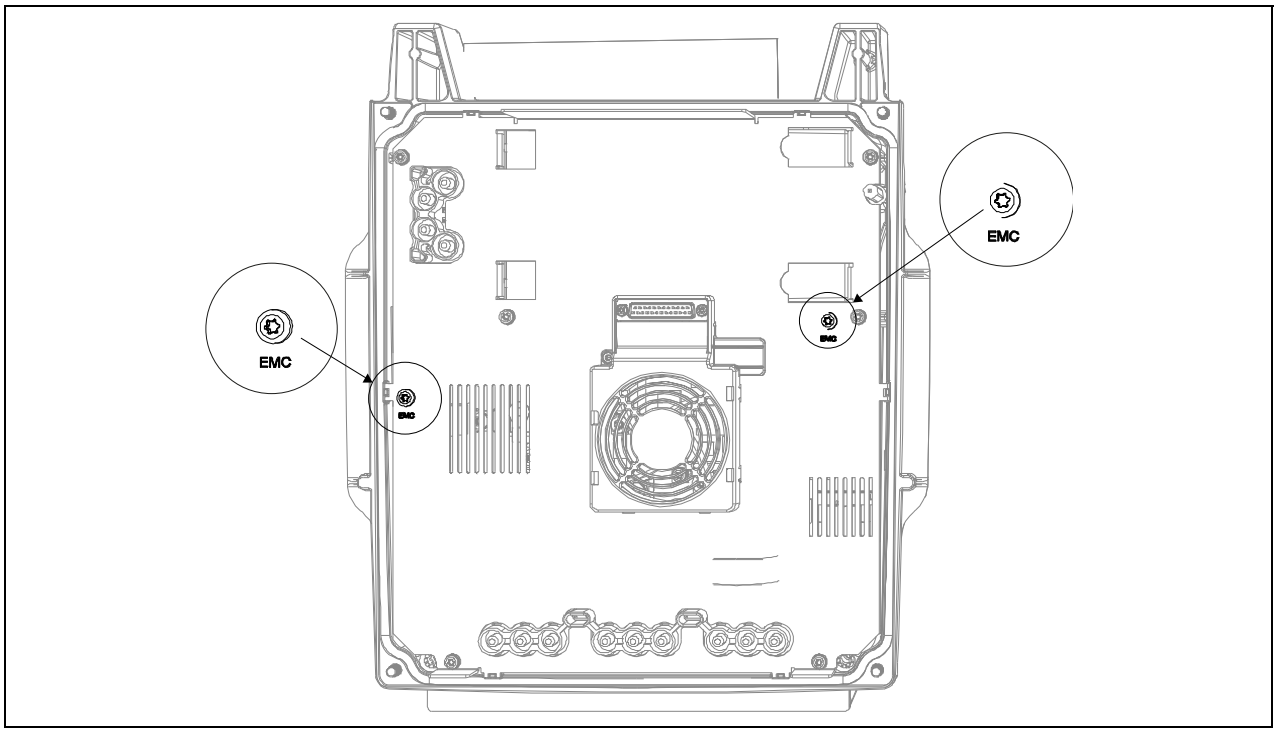

Figure 42.Locations of EMC screws in MM6.

2	**CAUTION!** Before connecting the AC drive to mains make sure that the EMC protection class settings of the drive are appropriately made.
3	**NOTE!** After having performed the change write *'EMC level modified'* on the sticker included in the VACON® 100 X delivery (see below) and note the date. Unless already done, attach the sticker close to the name plate of the AC drive. **Product modified** Date: Date: EMC-level modified C1->C4 Date:DDMMYY

6.3 RUNNING THE MOTOR

MOTOR RUN CHECK LIST

⚠	**Before starting the motor**, check that the motor is **mounted properly** and ensure that the machine connected to the motor allows the motor to be started.
⚠	Set the maximum motor speed (frequency) according to the motor and the machine connected to it.
⚠	**Before reversing the motor** make sure that this can be done safely.
⚠	Make sure that no power correction capacitors are connected to the motor cable.
⚠	Make sure that the motor terminals are not connected to mains potential.

6.3.1 CABLE AND MOTOR INSULATION CHECKS

1. Motor cable insulation checks
   Disconnect the motor cable from terminals U, V and W of the AC drive and from the motor. Measure the insulation resistance of the motor cable between each phase conductor as well as between each phase conductor and the protective ground conductor. The insulation resistance must be >1MΩ at ambient temperature of 20°C.
2. Mains cable insulation checks
   Disconnect the mains cable from terminals L1, L2 and L3 of the AC drive and from the mains. Measure the insulation resistance of the mains cable between each phase conductor as well as between each phase conductor and the protective ground conductor. The insulation resistance must be >1MΩ at ambient temperature of 20°C.
3. Motor insulation checks
   Disconnect the motor cable from the motor and open the bridging connections in the motor connection box. Measure the insulation resistance of each motor winding. The measurement voltage must equal at least the motor nominal voltage but not exceed 1000 V. The insulation resistance must be >1MΩ at ambient temperature of 20°C.

6.4 MAINTENANCE

In normal conditions, the AC drive is maintenance-free. However, regular maintenance is recommended to ensure trouble-free operation and longevity of the drive. We recommend the table below is followed for maintenance intervals.

NOTE: Because of capacitor type (thin film capacitors), reforming of capacitors is not necessary.

Maintenance interval	Maintenance action
Regularly and according to general maintenance interval	• Check tightening torques of terminals
6...24 months (depending on environment)	• Check input and output terminals and control I/O terminals. • Check operation of cooling fan • Check the heatsink for dust and clean if necessary
6...20 years	• Change main fan
10 years	• Replace the battery of the RTC.

7. TECHNICAL DATA

7.1 AC DRIVE POWER RATINGS

7.1.1 MAINS VOLTAGE 3AC 208-240V

	Mains voltage 3AC 208-240V, 50/60 Hz						
	Converter type	Input current [A]	Loadability			Motor shaft power 230V supply	
			Rated continuous current I_N [A]	50% overload current [A]	Max current I_S	[kW]	[HP]
MM4	0007	6.0	**6.6**	9.9	13.2	**1.1**	**1.5**
	0008	7.2	**8.0**	12.0	16.0	**1.5**	**2.0**
	0011	9.7	**11.0**	16.5	22.0	**2.2**	**3.0**
	0012	10.9	**12.5**	18.8	25.0	**3.0**	**4.0**
MM5	0018	16.1	**18.0**	27.0	36.0	**4.0**	**5.0**
	0024	21.7	**24.2**	36.3	48.4	**5.5**	**7.5**
	0031	27.7	**31.0**	46.5	62.0	**7.5**	**10.0**
MM6	0048	43.8	**48.0**	72.0	96.0	**11.0**	**15.0**
	0062	57.0	**62.0**	93.0	124.0	**15.0**	**20.0**

Table 28. Power ratings of VACON® 100 X, supply voltage 3AC 208-240V.

NOTE: The rated currents in given ambient temperatures (in Table 28) are achieved only when the switching frequency is equal to or less than the factory default.

7.1.2 MAINS VOLTAGE 3AC 380-480/500V

	Mains voltage 3AC 380-480/500V, 50/60 Hz						
	Converter type	Input current [A]	Loadability			Motor shaft power	
						400V	480V
			Rated continuous current I_N [A]	50% overload current [A]	Max current I_S	[kW]	[HP]
MM4	0003	3.4	**3.4**	5.1	6.8	**1.1**	**1.5**
	0004	4.6	**4.8**	7.2	9.6	**1.5**	**2.0**
	0005	5.4	**5.6**	8.4	11.2	**2.2**	**3.0**
	0008	8.1	**8.0**	12.0	16.0	**3.0**	**5.0**
	0009	9.3	**9.6**	14.4	19.2	**4.0**	**5.0**
	0012	11.3	**12.0**	18.0	24.0	**5.5**	**7.5**
MM5	0016	15.4	**16.0**	24.0	32.0	**7.5**	**10.0**
	0023	21.3	**23.0**	34.5	46.0	**11.0**	**15.0**
	0031	28.4	**31.0**	46.5	62.0	**15.0**	**20.0**
MM6	0038	36.7	**38.0**	57.0	76.0	**18.5**	**25.0**
	0046	43.6	**46.0**	69.0	92.0	**22.0**	**30.0**
	0061	58,2	**61.0**	91.5	122.0	**30.0**	**40.0**

Table 29. Power ratings of VACON® 100 X, supply voltage 3AC 380-480/500V, high overload.

	Mains voltage 3AC 380-480/500V, 50/60 Hz						
	Converter type	Input current [A]	Loadability			Motor shaft power	
						400V	480V
			Rated continuous current I_N [A]	10% overload current [A]	Max current I_S	[kW]	[HP]
MM6	0072	67.5	**72.0**	80.0	108.0	**37.0**	**50.0**

Table 30. Power ratings of VACON® 100 X, supply voltage 3AC 380-480/500V, low overload.

NOTE: The rated currents in given ambient temperatures (in Table 29 and Table 30) are achieved only when the switching frequency is equal to or less than the factory default.

7.1.3 DEFINITIONS OF OVERLOADABILITY

High overload= Following continuous operation at rated output current I_N, the converter supplies 150% * I_N for 1 min, followed by a period of at least 9 min at I_N or below.

Example: If the duty cycle requires 150% rated current for 1 min in every 10 min, the remaining 9 min must be at rated current I_N or less.

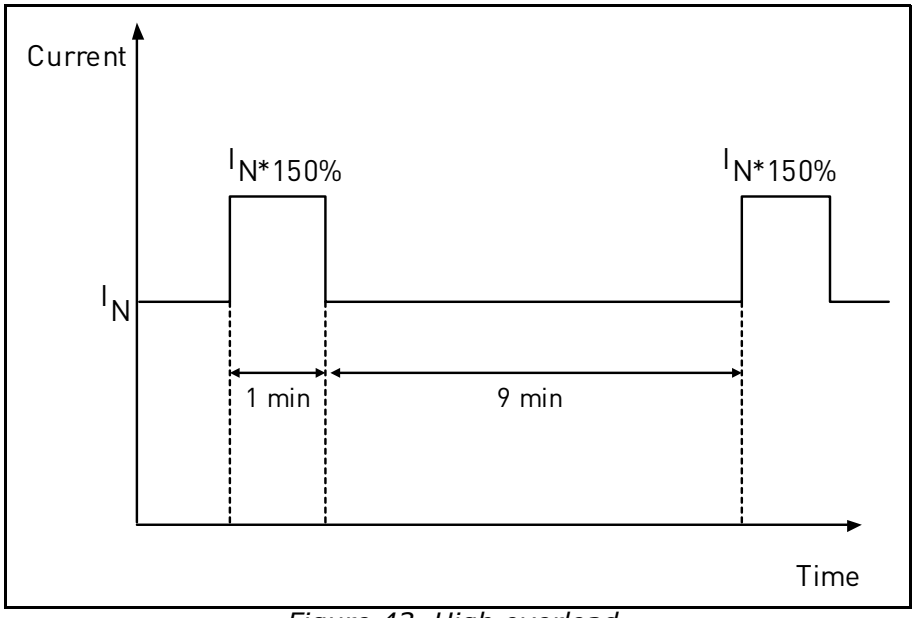

Figure 43. High overload.

Low overload= Following continuous operation at rated output current I_N, the converter supplies 110% * I_N for 1 min, followed by a period of at least 9 min at I_N or below.

Example: If the duty cycle requires 110% rated current for 1 min in every 10 min, the remaining 9 min must be at rated current I_N or less.

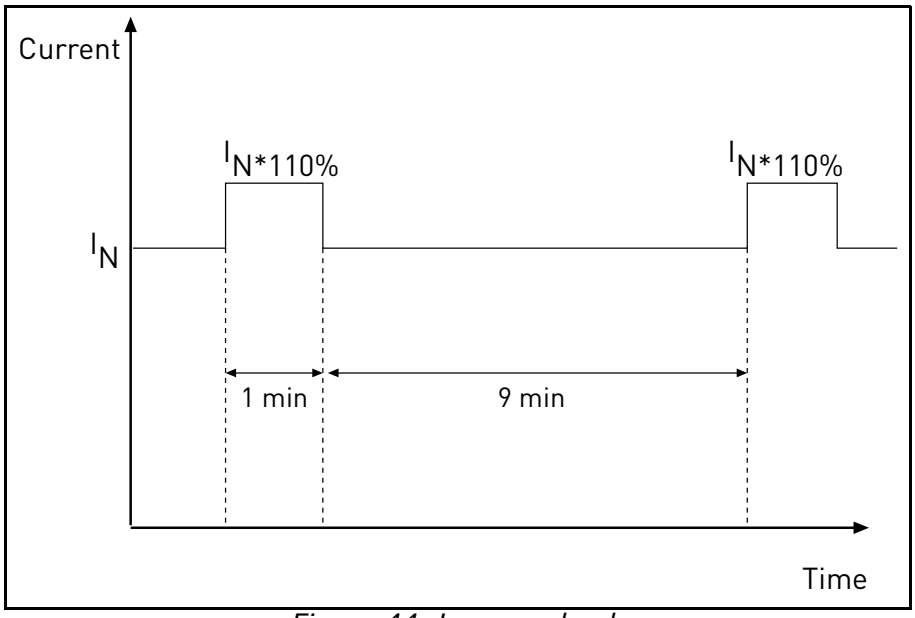

Figure 44. Low overload.

NOTE! For more information, please refer to IEC61800-2 (IEC:1998) Standard.

7.2 BRAKE RESISTOR RATINGS

Make sure that the resistance is higher than the minimum resistance defined. The power handling capacity must be sufficient for the application.

Recommended minimum brake resistor values for VACON® 100 X AC drives:

Mains Voltage 3AC 208-240V, 50/60 Hz			
Frame	**Type**	**Minimum Resistance recommended [ohm]**	**Brake power @405 VDC [kW]**
MM4	0007	25	6.6
	0008	25	6.6
	0011	25	6.6
	0012	25	6.6
MM5	0018	15	10.9
	0024	15	10.9
	0031	10	16.4
MM6	0048	8	20.5
	0062	8	20.5

Table 31. Brake resistor ratings, 208-240V.

Mains Voltage 3AC 380-480/500V, 50/60 Hz			
Frame	**Type**	**Minimum Resistance recommended [ohm]**	**Brake power @845 VDC [kW]**
MM4	0003	50	14.3
	0004	50	14.3
	0005	50	14.3
	0008	50	14.3
	0009	50	14.3
	0012	50	14.3
MM5	0016	30	23.8
	0023	30	23.8
	0031	20	35.7
MM6	0038	15	47.6
	0046	15	47.6
	0061	15	47.6
	0072	15	47.6

Table 32. Brake resistor ratings, 380-480/500V.

7.3 VACON® 100 X - TECHNICAL DATA

Mains connection	Input voltage U_{in}	3AC 208...240V 3AC 380...480V 3AC 380...500V
	Input voltage tolerance	-15%...+10% continuously
	Input frequency	50/60 Hz
	Protection class	I
	Input frequency tolerance	47.5...66 Hz
	Connection to mains	Once per minute or less
	Starting delay	<7 s
	Supply network	TN- and IT-network (cannot be used with corner earthed network)
	Short-circuit current	Max. short-circuit current has to be < 100kA
Motor connection	Output voltage	3AC 0... U_{in}
	Rated output current	I_N: Ambient temperature max. +40°C. See Table 28, Table 29 and Table 30.
	Overload output current	1.5 x I_N (1 min/10 min); 1.1 x I_N (1 min/10 min) only for MM6 0072. See Table 28, Table 29 and Table 30.
	Starting output current	I_S for 2 s every 20 s. See Table 28, Table 29 and Table 30.
	Output frequency	0...320 Hz (standard)
	Frequency resolution	0.01 Hz
	Protection class	I
	Motor characteristics	AC squirrel cage motors Permanent magnet motors
	Cable type	Screened motor cable
	Cable maximum length (full EMC compliance)	C2: 15m
Control characteristics	Switching frequency	Programmable 1.5...16 kHz; Default: 6 kHz (MM4 and MM5); 4 kHz (MM6) Automatic switching frequency derating in case of overheating
	Frequency reference Analogue input Panel reference	 Resolution 0.1% (10-bit), accuracy ±1% Resolution 0.01 Hz
	Field weakening point	8...320 Hz
	Acceleration time	0.1...3000 sec
	Deceleration time	0.1...3000 sec
	Braking	Brake chopper standard in all frames External brake resistor optional

Table 33. VACON® 100 X technical data.

Control connections	See chapter 5.	
Communication interface	Fieldbus	Standard: Serial communication (RS485/Modbus); Ethernet IP, Profinet IO, Modbus TCP, Bacnet IP Optional: CanOpen; Profibus DP, DeviceNet, Lonworks, AS-interface
	Status indicators	Drive status indicators (LED) on top side (POWER, RUN, FAULT, READY)
Ambient conditions	Ambient operating temperature	-10°C ...+40°C
	Extended temperature range	up to 60°C with current derating (see chapter 1.8)
	Storage temperature	-40°C...+70°C
	Relative humidity	0 to 100% R_H
	Pollution degree	PD2 used for PCB design. However the drives are suitable for outdoor use because of dust-tight enclosure to numeral 6 [acc. to IEC 60529].
	Altitude	100% load capacity (no derating) up to 1,000m; derating 1%/100m at 1,000...3,000m
	Stationary vibration: sinusoidal	3 Hz ≤ f ≤ 8,72 Hz: 10 mm 8,72 Hz ≤ f ≤ 200 Hz: 3g [3M7 acc. to IEC 60721-3-3]
	Shock/Bump	25g / 6 ms [3M7 acc. to IEC 60721-3-3]
	Degree of protection	IP66/Type 4X
Noise Level	Average noise level (min-max) in dB (A)	The sound pressure depends on the cooling fan speed, which is controlled in accordance with the drive temperature. MM4: 45-56 MM5: 57-65 MM6: 63-72
Directives	EMC	2004/108/EC
	Low Voltage Directive	2006/95/EC
	RoHS	2002/95/EC
	WEEE	2012/19/EC
Standards	Immunity	EN61800-3 (2004), 1st and 2nd environment
	Emissions	EN61800-3 (2004), Category C2 The drive can be modified for IT-networks.
	THD	EN61000-3-12 (see chapter 1.9)
	Safety	EN 61800-5-1
Production quality	ISO 9001	

Table 33. VACON® 100 X technical data.

Approvals	Functional Safety	TÜV - Tested
	Electrical Safety	TÜV - Tested
	EMC	TÜV - Tested
	USA, Canada	cULus approval, file number E171278
Declaration of Conformity	Korea	KC mark
	Australia	C-tick Declaration of Conformity Registration number E2204
	Europe	EC Declaration of Conformity
Protections	Undervoltage trip limit	Depends on supply voltage (0,8775*supply voltage): Supply voltage 240 V: Trip limit **211 V** Supply voltage 400 V: Trip limit **351 V** Supply voltage 480 V: Trip limit **421 V**
	Overvoltage fault protection	Yes
	Earth fault protection	Yes
	Mains supervision	Yes
	Motor phase supervision	Yes
	Overcurrent protection	Yes
	Unit overtemperature protection	Yes
	Motor overload protection	Yes. These devices provide motor overload protection at 105% of full load amperes.
	Motor stall protection	Yes
	Motor underload protection	Yes
	Short-circuit protection of +24V and +10V reference voltages	Yes
	Thermal motor protection	Yes (by PTC)

Table 33. VACON® 100 X technical data.

7.3.1 TECHNICAL INFORMATION ON CONTROL CONNECTIONS

Standard I/O		
Terminal	**Signal**	**Technical information**
1	Reference output	+10V, +3%; Maximum current 10 mA
2	Analogue input, voltage or current	Analogue input channel 1 0-20 mA (Ri =250 Ω) 0-10 V (Ri=200kΩ) Resolution 0.1%, accuracy ±1% Selection V/mA with dip-switches (see chapter 5). Default 0-10V Short-circuited protected.
3	Analogue input common	Differential input if not connected to ground; Allows ±20V differential mode voltage to GND
4	Analogue input, voltage or current	Analogue input channel 2 0-20 mA (Ri =250 Ω) 0-10 V (Ri=200kΩ) Resolution 0.1%, accuracy ±1% Selection V/mA with dip-switches (see chapter 5). Default 0-20mA Short-circuited protected.
5	Analogue input common	Differential input if not connected to ground; Allows 20V differential mode voltage to GND
6	24V aux. voltage	+24V, ±10%, max volt. ripple < 100mVrms; max. 250mA Short-circuit protected
7	I/O ground	Ground for reference and controls (connected internally to frame earth through 1MΩ)
8	Digital input 1	Positive or negative logic Ri = min. 5kΩ 18...30V = "1" 0...5V = "0"
9	Digital input 2	
10	Digital input 3	
11	Common A for DIN1-DIN6.	Digital inputs can be isolated from ground, see chapter 5. Default: connected to ground.
12	24V aux. voltage	Same as terminal 6.
13	I/O ground	Ground for reference and controls (connected internally to frame earth through 1MΩ)
14	Digital input 4	Positive or negative logic Ri = min. 5kΩ 18...30V = "1" 0...5V = "0"
15	Digital input 5	
16	Digital input 6	
17	Common A for DIN1-DIN6.	Digital inputs can be isolated from ground, see chapter 5. Default: connected to ground.
18	Analogue output, voltage or current	Analogue output channel 1 0-20 mA (R_L<500 Ω) 0-10 V (R_L>1kΩ) Resolution 0.1%, accuracy ±2% Selection V/mA with dip-switches (see chapter 5). Default 0-20mA Short-circuited protected.
19	Analogue output common	
30	24V auxiliary input voltage	Can be used with an external power supply (with a current limiter or fuse protected) to supply the control unit and fieldbus for backup purposes. Dimensioning: max. 1000mA/control unit.

Table 34. Technical information on standard I/O terminals.

Standard I/O		
Terminal	**Signal**	**Technical information**
A	RS485	Differential receiver/transmitter Set bus termination with dip switches (see page 50). Default: but termination disconnected.
B	RS485	

Table 34. Technical information on standard I/O terminals.

Relays	Relays with two change-over contact (SPDT) and a PTC thermistor input. 5,5 mm isolation between channels.	
Terminal	**Signal**	**Technical information**
21 **22** **23**	Relay output 1*	Switching capacity 24VDC/8A 250VAC/8A 125VDC/0.4A Min.switching load 5V/10mA
24 **25** **26**	Relay output 2*	Switching capacity 24VDC/8A 250VAC/8A 125VDC/0.4A Min.switching load 5V/10mA
28 **29**	Thermistor input	Rtrip = 4.7 kΩ (PTC); Measuring voltage 3.5V

Table 35. Technical information on Relay and thermistor terminals.

* If 230VAC is used as control voltage from the output relays, the control circuitry must be powered with a separate isolation transformer to limit short circuit current and overvoltage spikes. This is to prevent welding on the relay contacts. Refer to standard EN 60204-1, section 7.2.9

8. OPTIONS

The options available for VACON® 100 X are described below.

8.1 MAINS SWITCH

The purpose of the *Mains switch* is to disconnect the VACON® 100 X from the mains when, for example, service actions are needed. The mains switch is available as option and it can be integrated in the drive. The switch can be mounted on either side of the drive. See Figure 45.

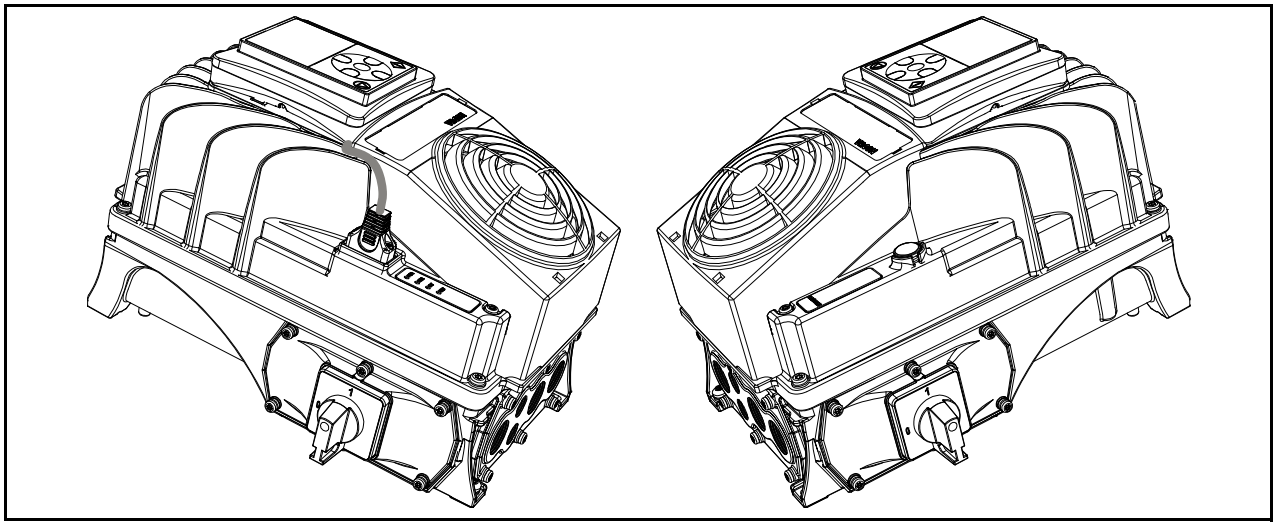

Figure 45. The mains switch mounted on either side of the drive, MM4 example.

8.1.1 INSTALLATION

1	• Remove the cable entry plate from the drive on the left-hand-side if the mains switch must be mounted on this side. Otherwise remove the cable entry plate from the right-hand-side. See the Figure 46.

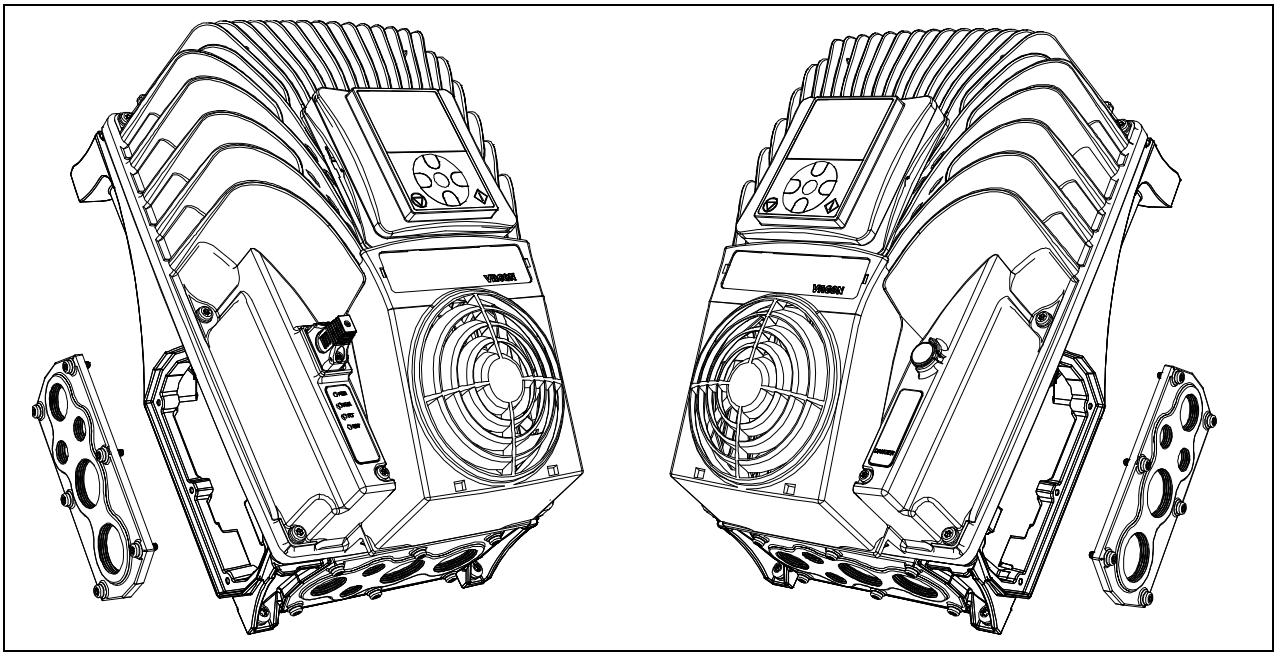

Figure 46. Disconnect the cable entry plate: example for MM5.

2	• Remove the cable entry plate from the bottom side of the terminal box by loosing the six screws. Cables pass through this inlet hole.

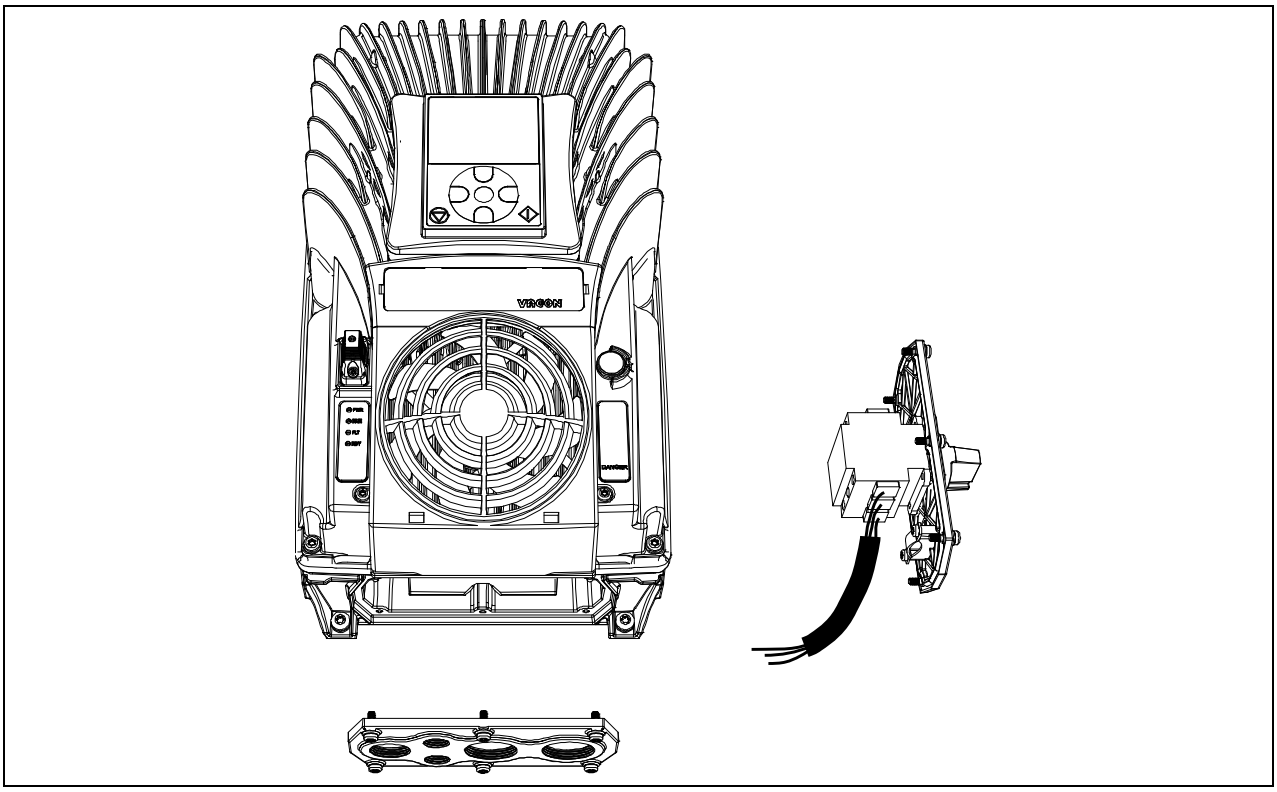

Figure 47. Cable entry plate from the bottom side of the drive.

3	• Remove the powerhead from the terminal box by loosing the screws on the top side of the drive.

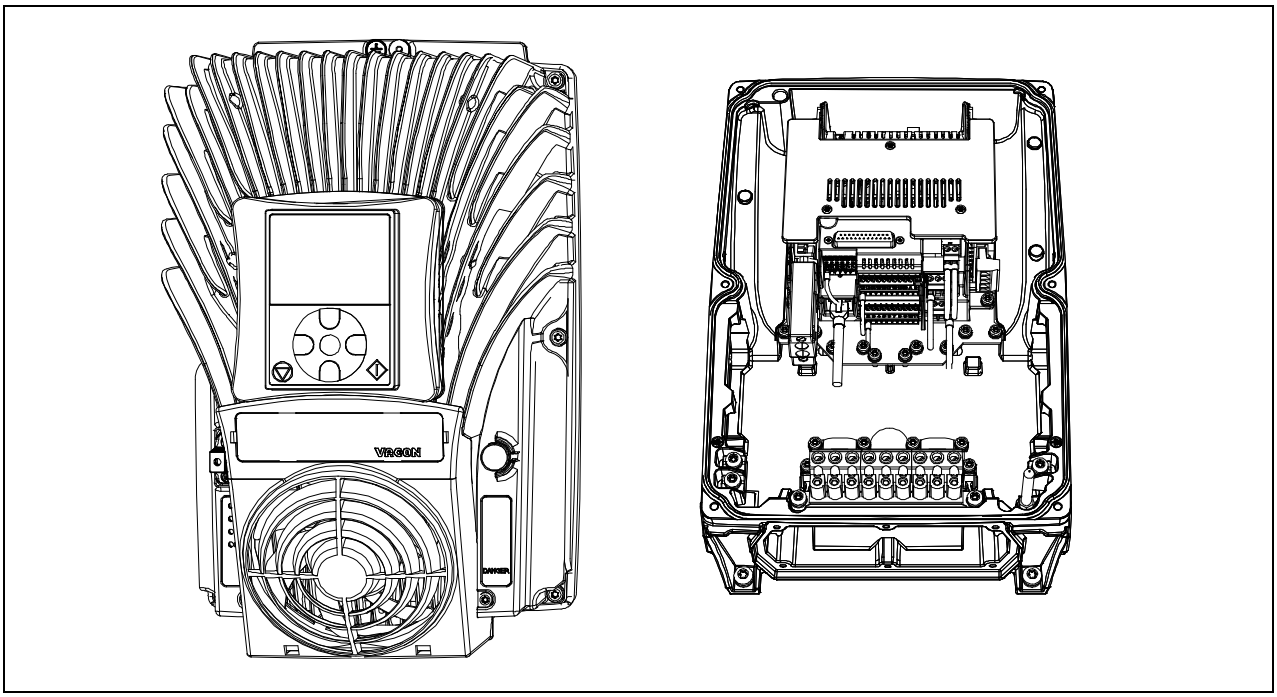

Figure 48. Powerhead separated from the terminal box.

4	• Connect the supply cable to the Mains switch passing through the cable entry plate of the bottom side (use the cable gland for sealing the cable to the gland plate) and then through the terminal box as shown in the figure below.

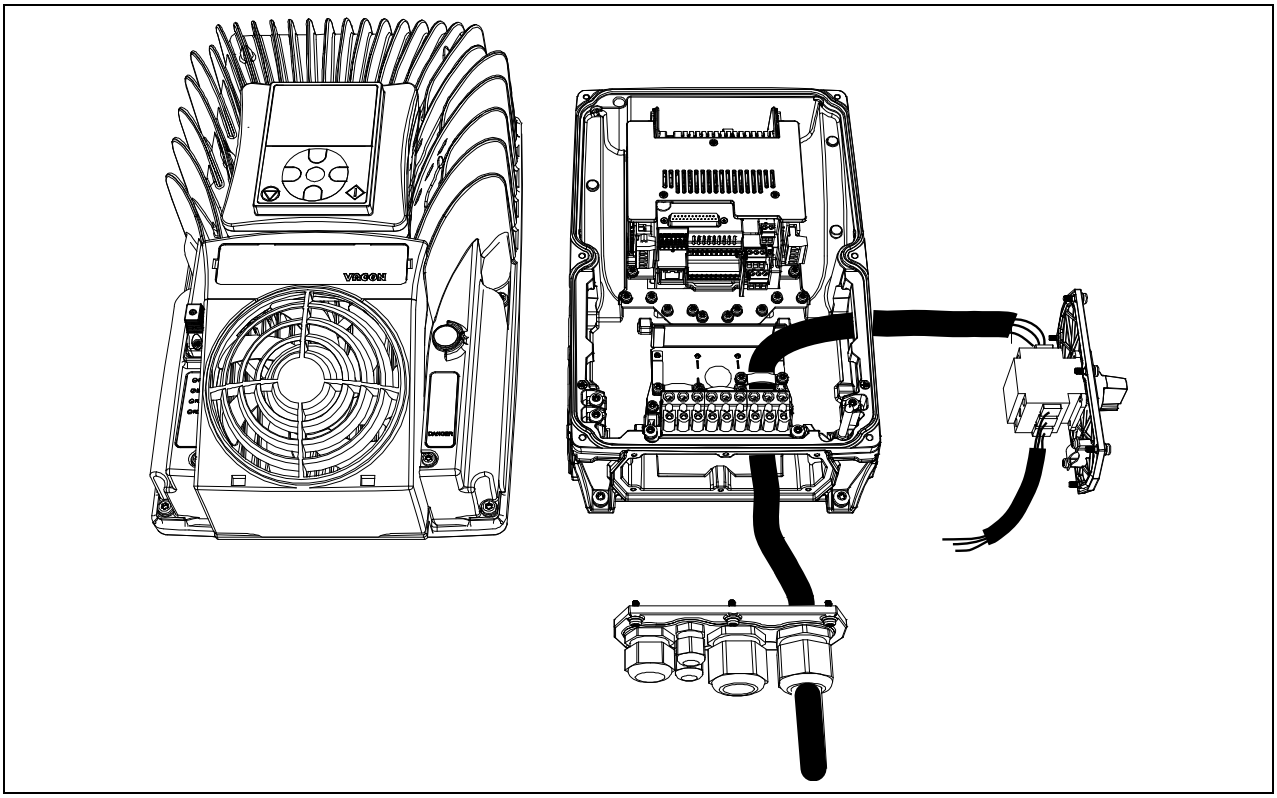

Figure 49. Connection of the supply cable to the Mains switch (right-hand-side example).

5	• Connect the cables from the Mains switch to the terminal box. The cables have to be connected to the terminals L1, L2 and L3.
6	• Place the Mains switch plate with the cables in the groove and fix it with its screws.
7	• Place the cable entry plate with the other cables (motor cable, brake cable, I/O cables) in the groove on the bottom side of the drive and fix it with its screws.

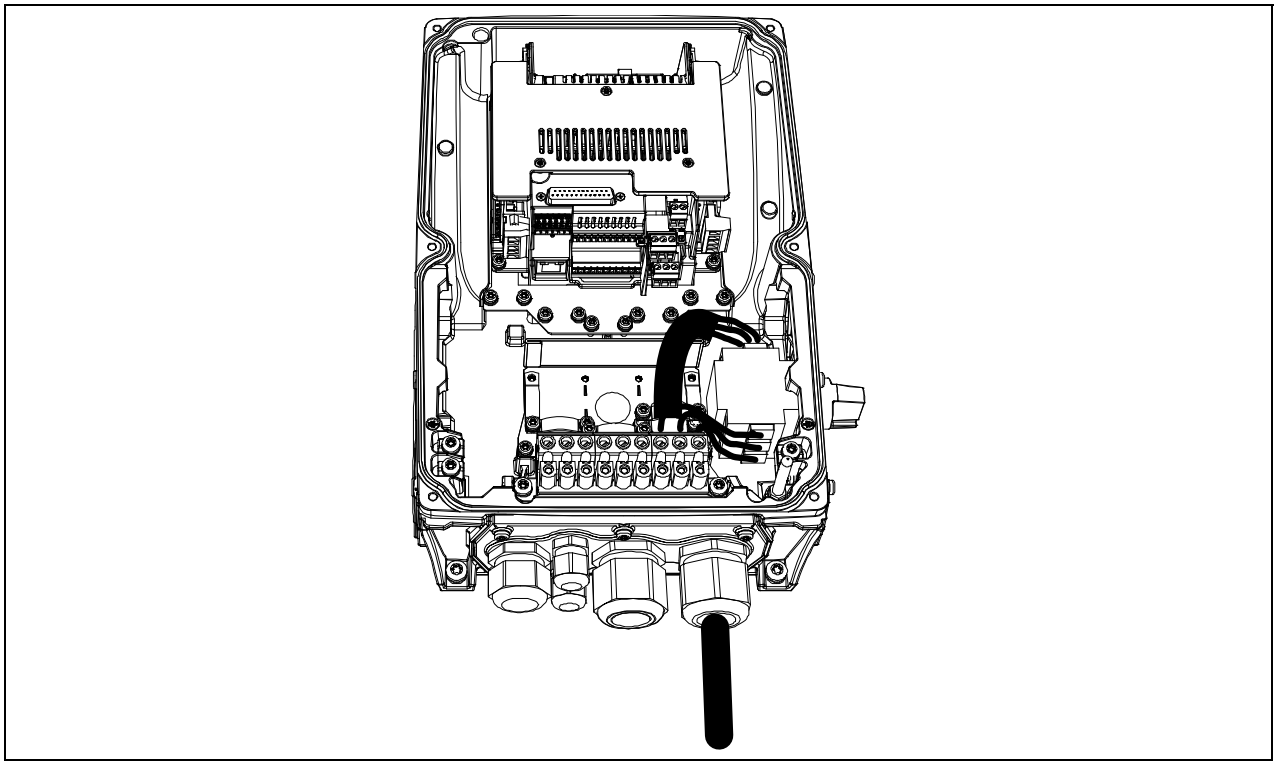

Figure 50. Mains switch, cable entry and cables connected.

8	• Mount the powerhead on the terminal box with its screws: the installation process has been completed. See Figure 51.

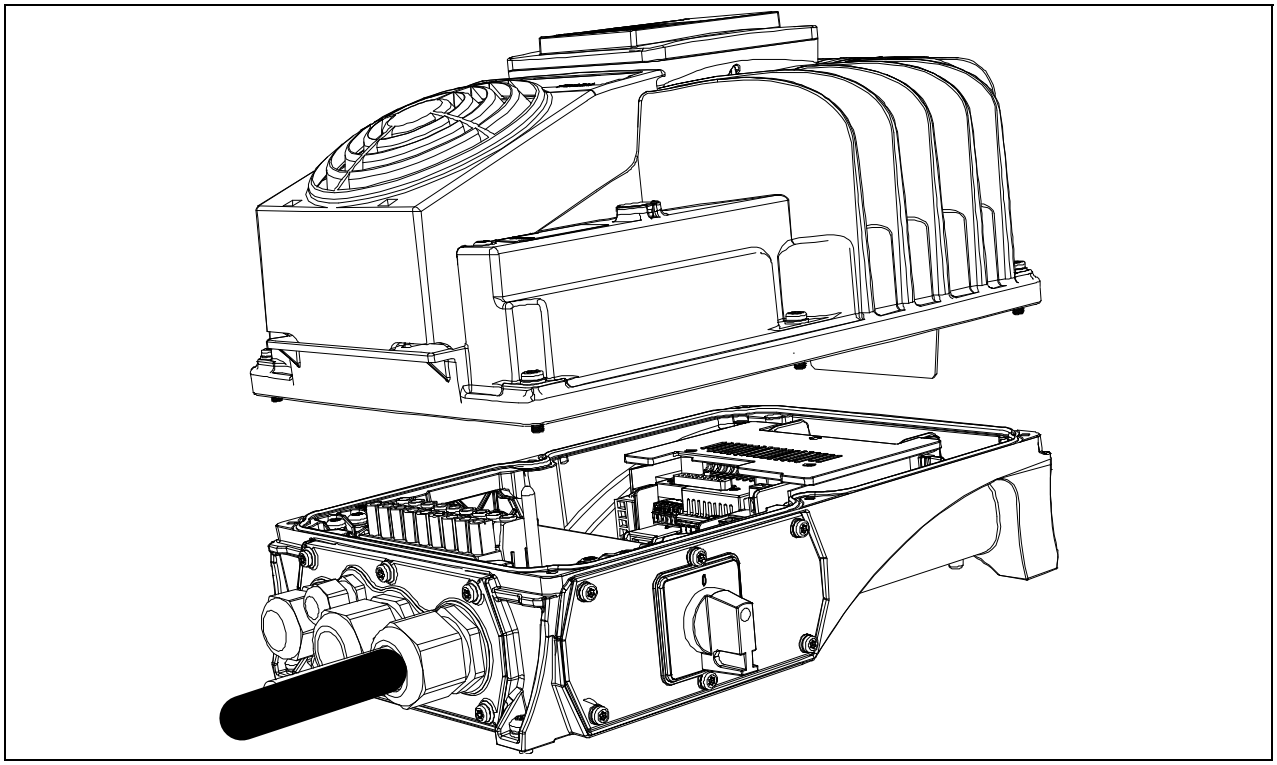

Figure 51. Mount the powerhead on the terminal box.

8.2 Control Keypad

The control keypad is the interface between the VACON® 100 X frequency converter and the user. With the control keypad it is possible to control the speed of a motor, to supervise the state of the equipment and to set the frequency converter's parameters.

The keypad is an option and can be delivered separately. The option includes the keypad, the keypad holder and three screws. You can use one screw to fix the keypad holder to the drive or three screws to fix the keypad holder to an enclosure/cabinet or any special housing for the drive in which you want to have a remote keypad control available.

8.2.1 Mounting onto the drive

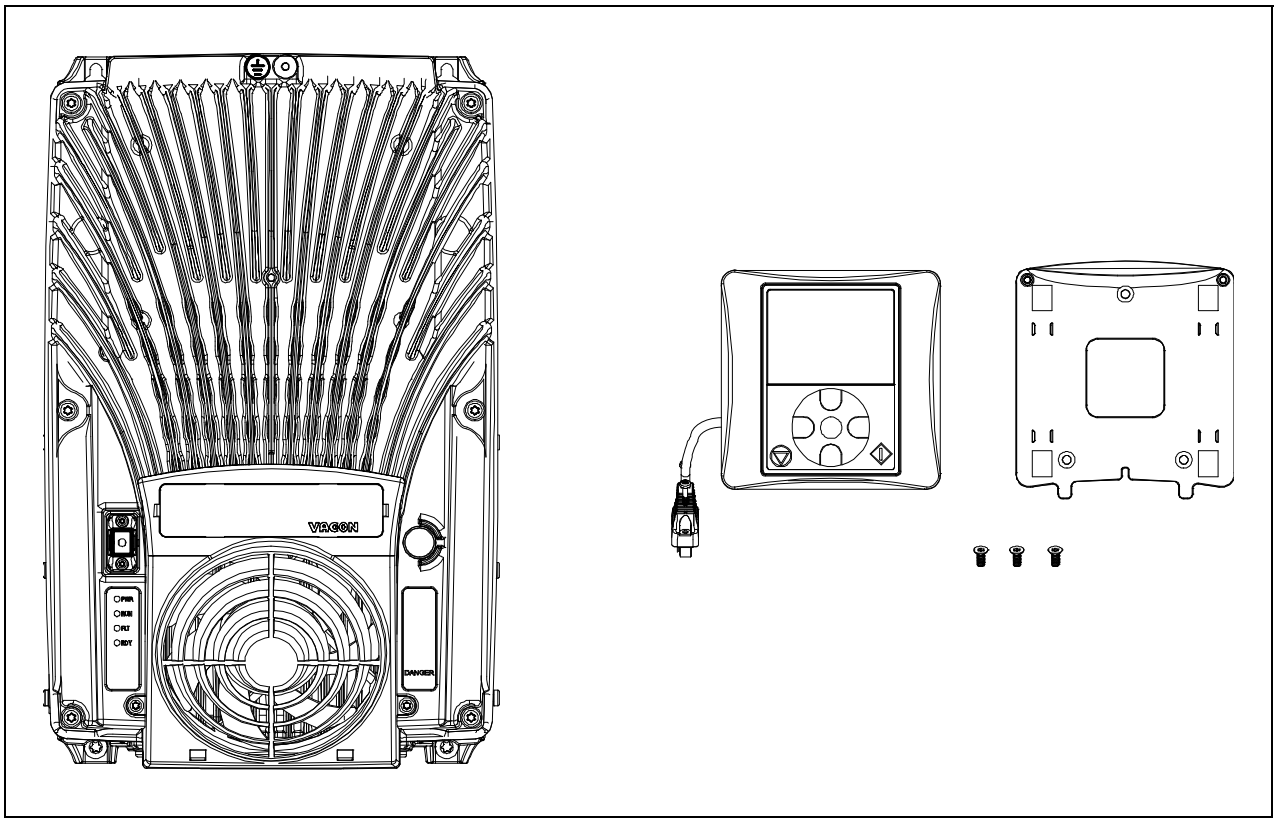

Figure 52. Drive and the optional keypad kit.

8.2.2 INSTALLATION

1	• Remove the HMI cap from the drive as shown in the Figure 53.

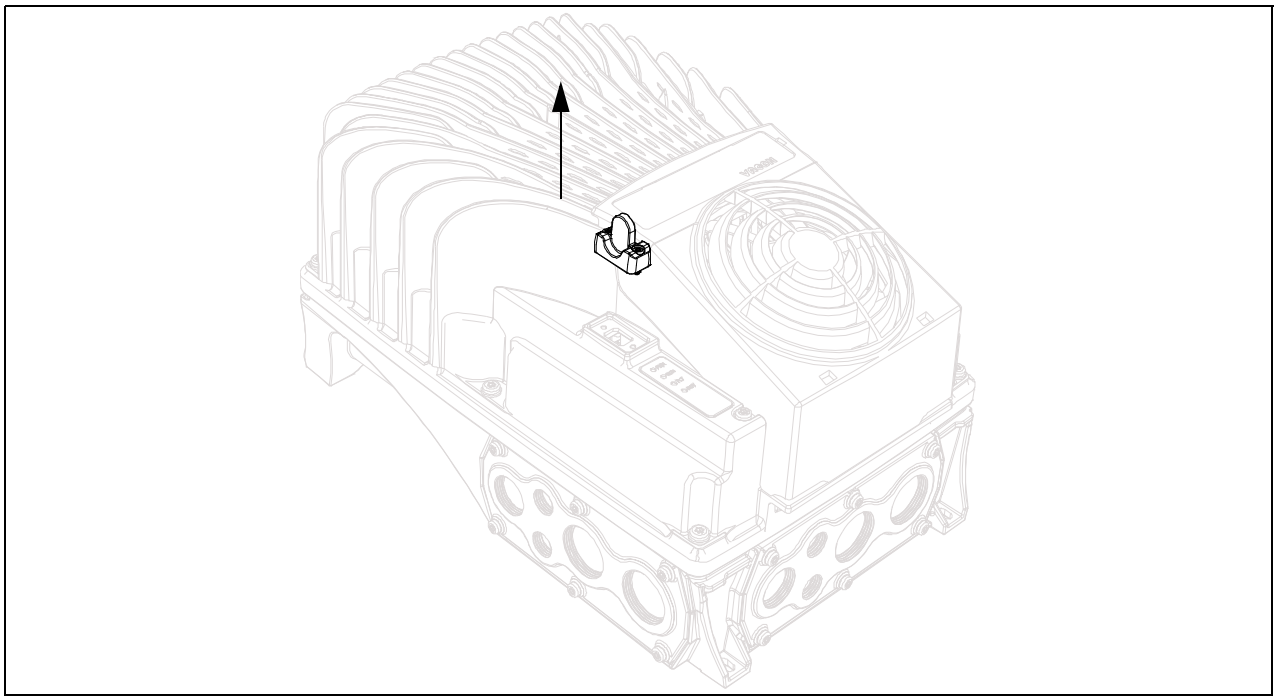

Figure 53. Disconnection of the HMI cap from the drive.

2	• Install the keypad holder with a screw as shown in the Figure 54. The metal sheets of the keypad holder have to be mounted under the fan holder as shown in the following figures.

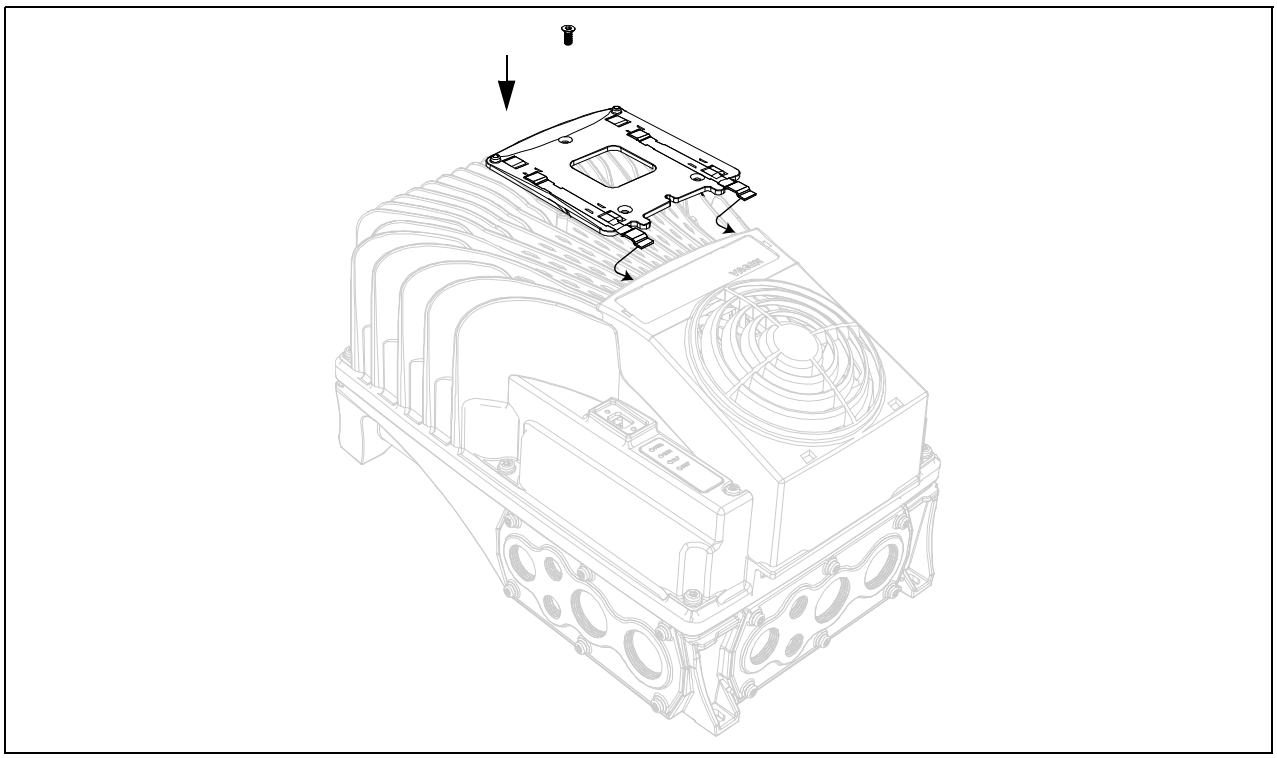

Figure 54. Installation of the keypad holder on the powerhead.

3	• Connect the keypad to the drive and plug the cable on the HMI connector as shown in the Figure 55 and in the Figure 56.

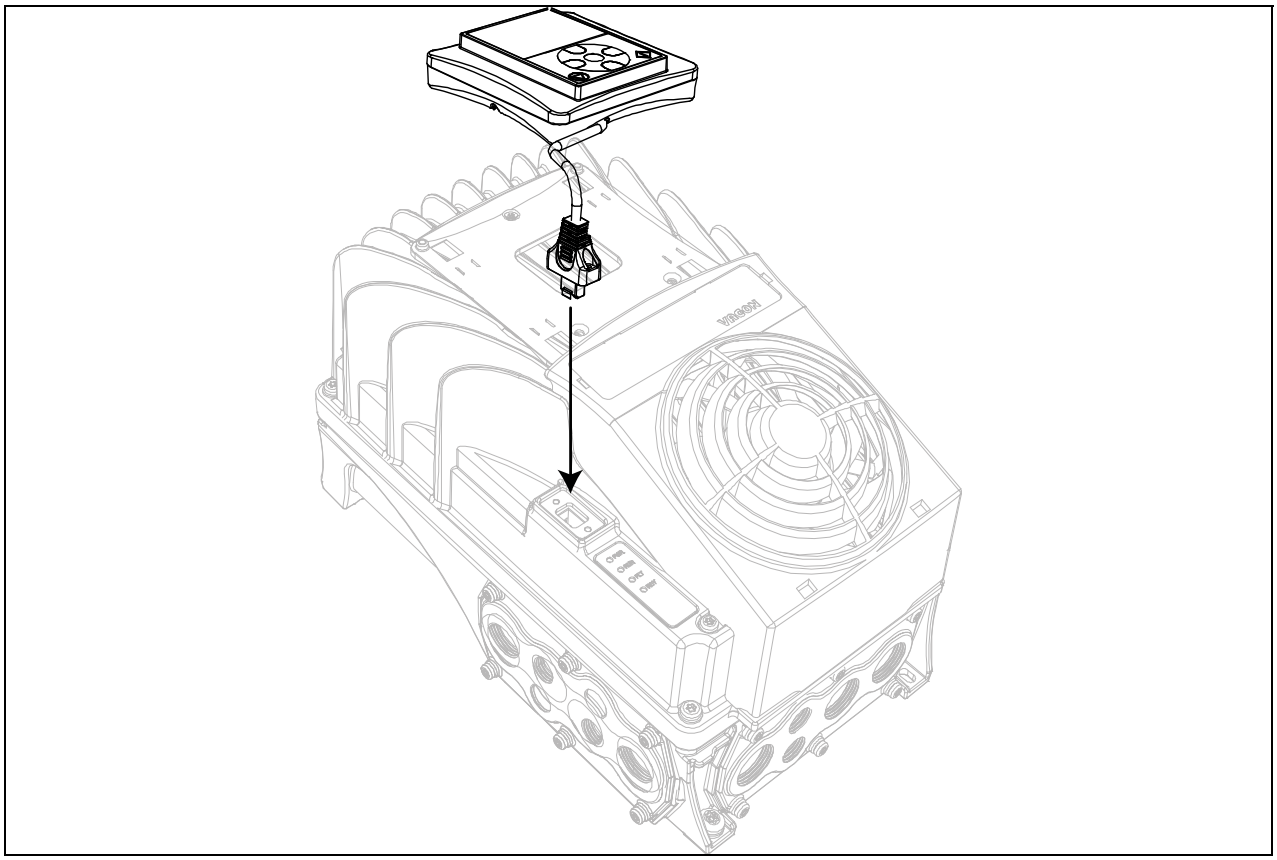

Figure 55. Mounting of the keypad.

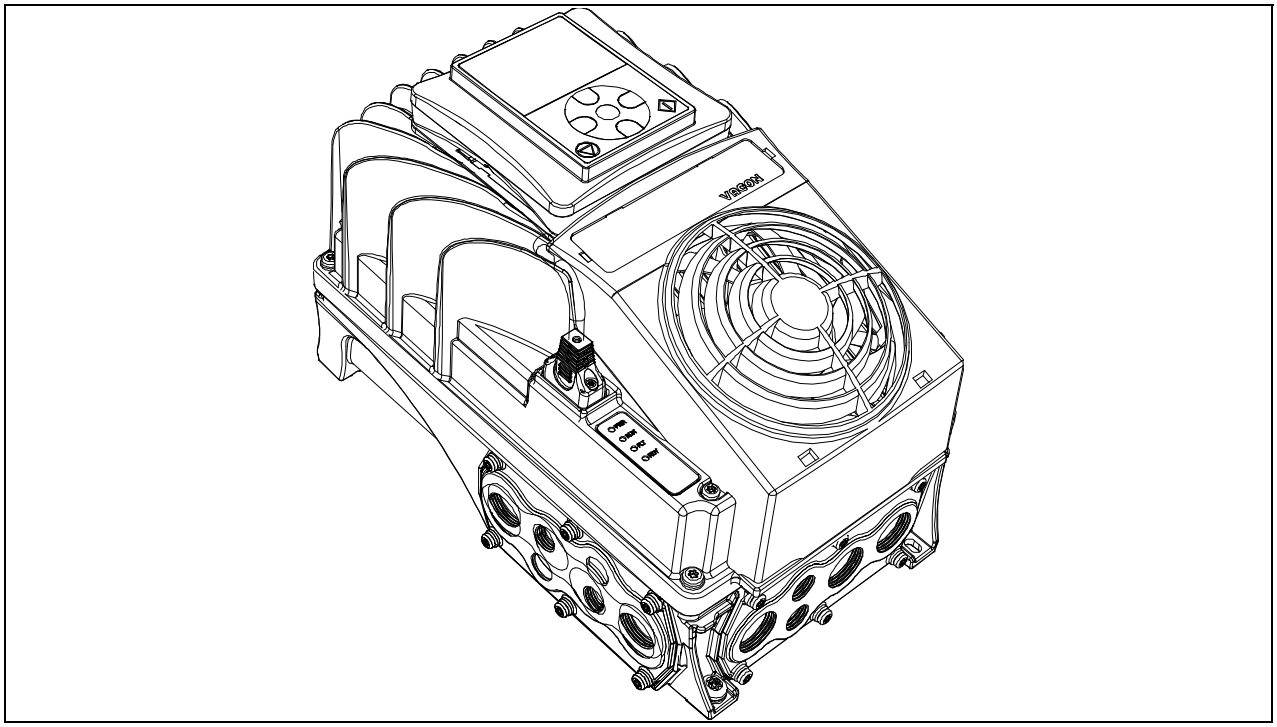

Figure 56. Keypad mounted onto the drive. Tighten the fixing screws of the cable connector to the enclosure of the drive. This is to keep the high IP66 protection degree of the drive.

8.2.3 WALL-MOUNTING

The keypad can be mounted on the wall in a convenient location by using the same keypad holder and three screws provided with the keypad option kit.

1	• *Fix the keypad holder with three screws to the wall.*

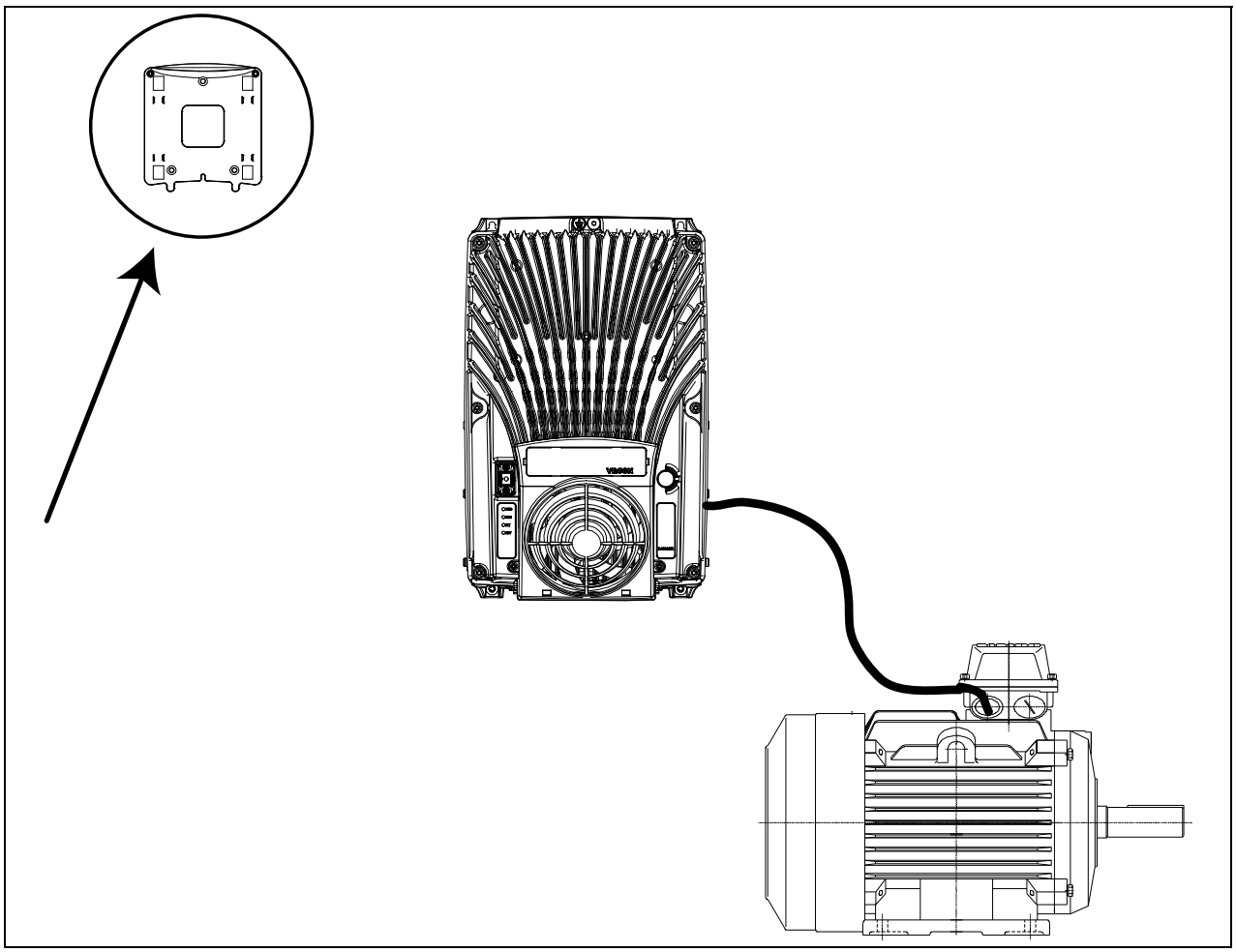

Figure 57. Fix the keypad holder with three screws to the wall.

2	• *Connect and fix the cable to the enclosure of the drive and hold the keypad to the wall.*

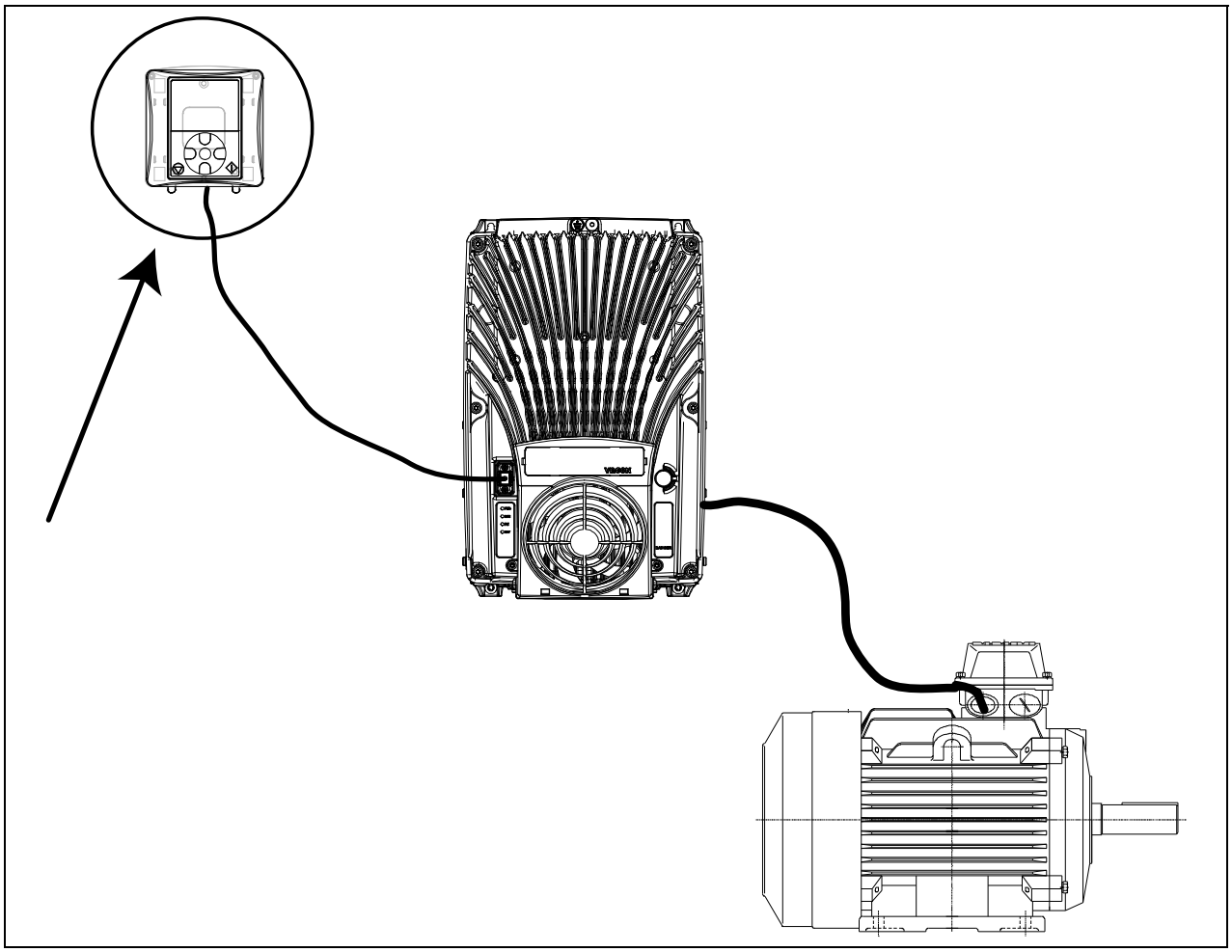

Figure 58. Keypad connected to the drive.

8.2.4 GRAPHICAL AND TEXT KEYPAD

There are two keypad types you can choose for your user interface: keypad with graphical display and keypad with text segment display (text keypad).

The button section of the keypad is identical for both keypad types.

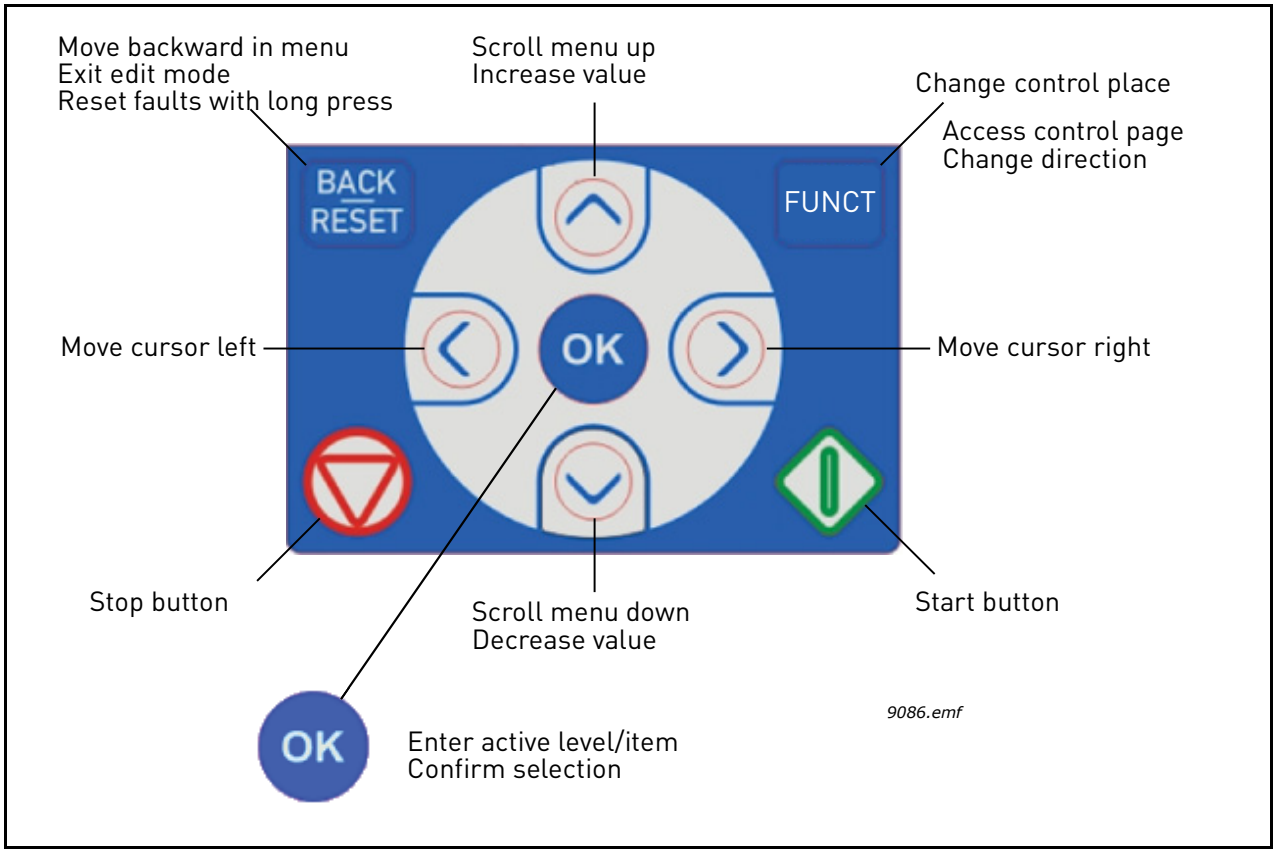

Figure 59. Keypad buttons.

8.2.5 VACON® KEYPAD WITH GRAPHICAL DISPLAY

The graphical keypad features an LCD display and 9 buttons.

8.2.5.1 Keypad display

The keypad display indicates the status of the motor and the drive and any irregularities in motor or drive functions. On the display, the user sees information about his present location in the menu structure and the item displayed.

8.2.5.2 Main menu

The data on the control keypad are arranged in menus and submenus. Use the Up and Down arrows to move between the menus. Enter the group/item by pressing the OK button and return to the former level by pressing the Back/Reset button.

The *Location field* indicates your current location. The *Status field* gives information about the present status of the drive. See Figure 60.

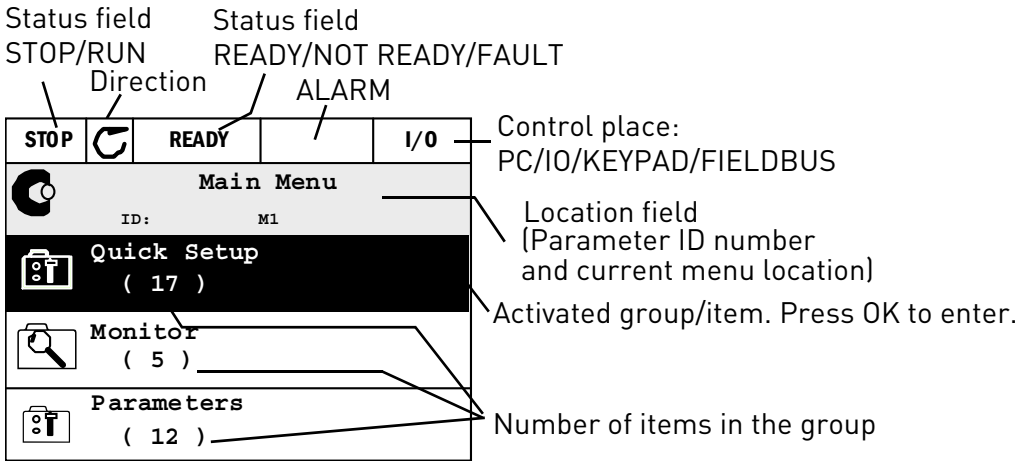

Figure 60. Main menu.

8.2.5.3 Using the graphical keypad

Editing values

The selectable values can be accessed and edited in two different ways on the graphical keypad.

Parameters with one valid value

Typically, one parameter is set one value. The value is selected either from a list of values (see example below) or the parameter is given a numerical value from a defined range (e.g. 0.00...50.00 Hz).

Change value of a parameter following the procedure below:

1. Locate the parameter.
2. Enter the *Edit* mode.
3. Set new value with the arrow buttons up/down. You can also move from digit to digit with the arrow buttons left/right if the value is numerical and then change the value with the arrow buttons up/down.
4. Confirm change with OK button or ignore change by returning to previous level with Back/Reset button.

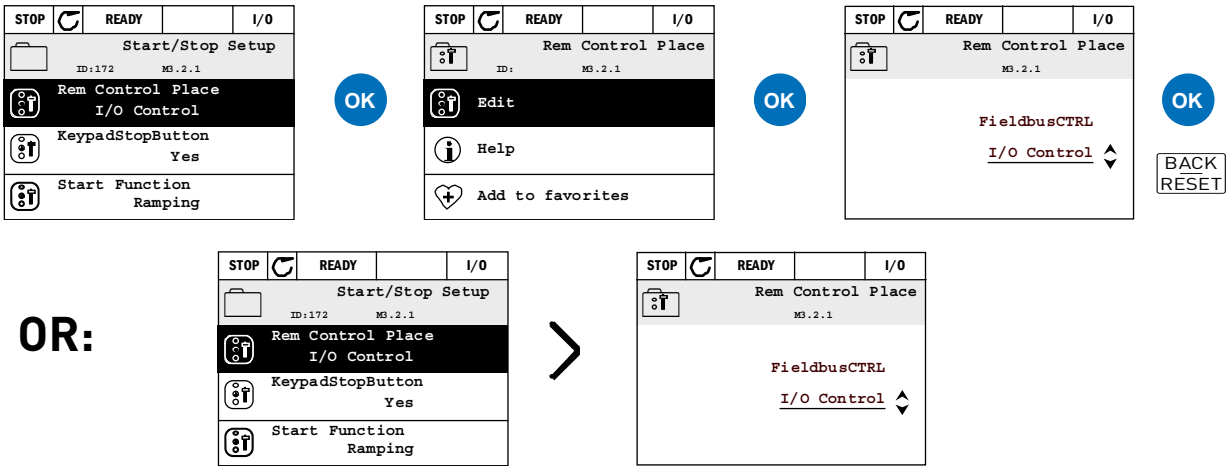

Figure 61. Typical editing of values on graphical keypad (text value).

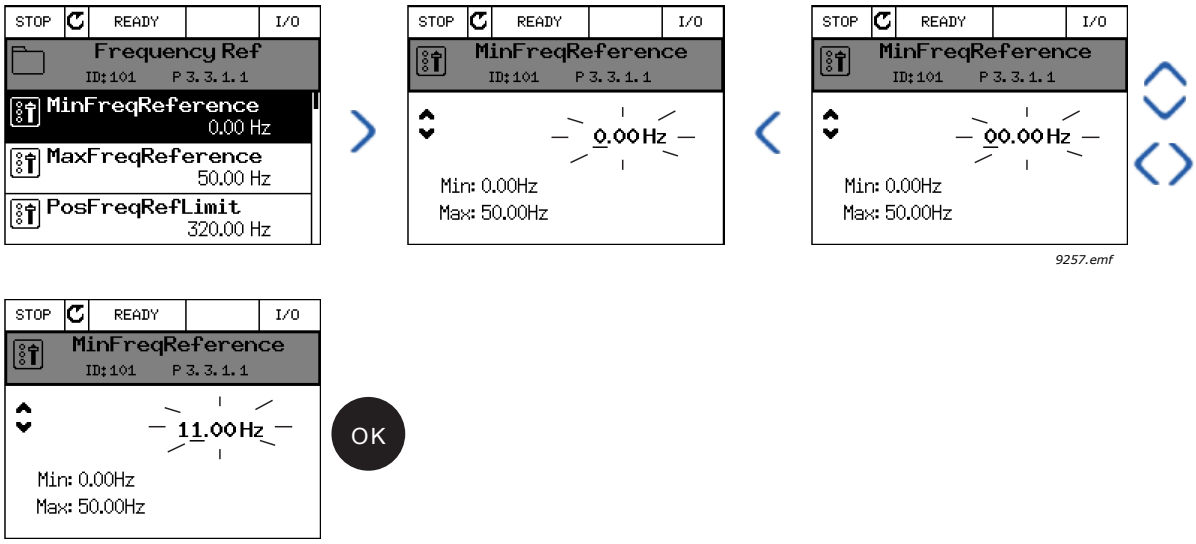

Figure 62. Typical editing of values on graphical keypad (numerical value).

Parameters with checkbox selection

Some parameters allow selecting several values. Make a checkbox selection at each value you wish to activate as instructed below.

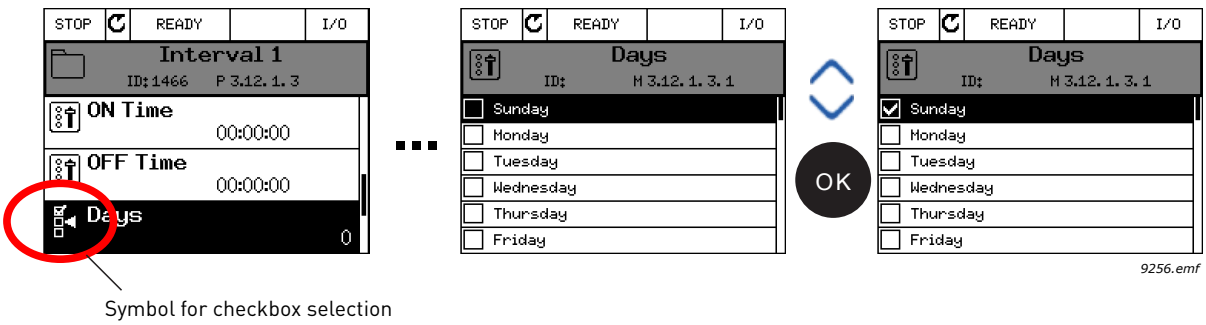

Figure 63. Applying the checkbox value selection on graphical keypad

Resetting fault

Instructions for how to reset a fault can be found in chapter 8.2.7.

Function button

The FUNCT button is used for four functions:

1. to quickly access the Control page,
2. to easily change between the Local (Keypad) and Remote control places,
3. to change the rotation direction and
4. to quickly edit a parameter value.

Control places

The *control place* is the source of control where the drive can be started and stopped. Every control place has its own parameter for selecting the frequency reference source. The *Local control place* is always the keypad. The *Remote control place* is determined by parameter P3.2.1 (I/O or Fieldbus). The selected control place can be seen on the status bar of the keypad.

Remote control place

I/O A, I/O B and Fieldbus can be used as remote control places. I/O A and Fieldbus have the lowest priority and can be chosen with parameter P3.2.1 *(Rem Control Place)*. I/O B, again, can bypass the remote control place selected with parameter P3.2.1 using a digital input. The digital input is selected with parameter P3.5.1.7 *(I/O B Ctrl Force)*.

Local control

Keypad is always used as control place while in local control. Local control has higher priority than remote control. Therefore, if, for example, bypassed by parameter P3.5.1.7 through digital input while in *Remote*, the control place will still switch to Keypad if *Local* is selected. Switching between Local and Remote Control can be done by pressing the FUNCT-button on the keypad or by using the "Local/Remote" (ID211) parameter.

Changing control places

Change of control place from *Remote* to *Local* (keypad).

1. Anywhere in the menu structure, push the *FUNCT* button.
2. Push the *Arrow up* or the *Arrow down* button to select *Local/Remote* and confirm with the *OK* button.
3. On the next display, select *Local* or *Remote* and again confirm with the *OK* button.
4. The display will return to the same location as it was when the *FUNCT* button was pushed. However, if the Remote control place was changed to Local (Keypad) you will be prompted for keypad reference.

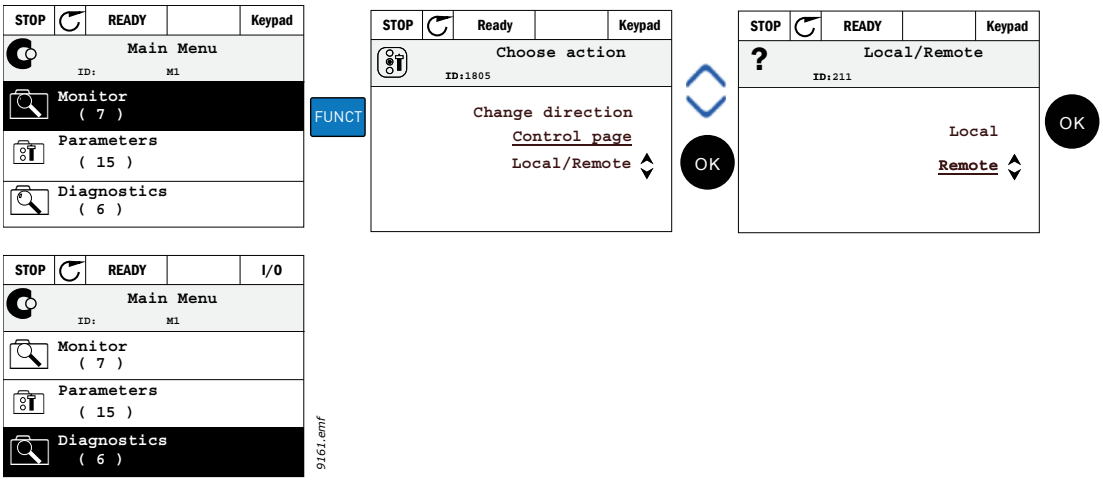

Figure 64. Changing control places.

Accessing the control page

The *Control page* is meant for easy operation and monitoring of the most essential values.

1. Anywhere in the menu structure, push the *FUNCT* button.
2. Push the *Arrow up* or the *Arrow down* button to select *Control page* and confirm with the *OK* button.
3. The control page appears
   If keypad control place and keypad reference are selected to be used you can set the *Keypad Reference* after having pressed the *OK* button. If other control places or reference values are used the display will show Frequency reference which is not editable. The other values on the page are Multimonitoring values. You can choose which values appear here for monitoring.

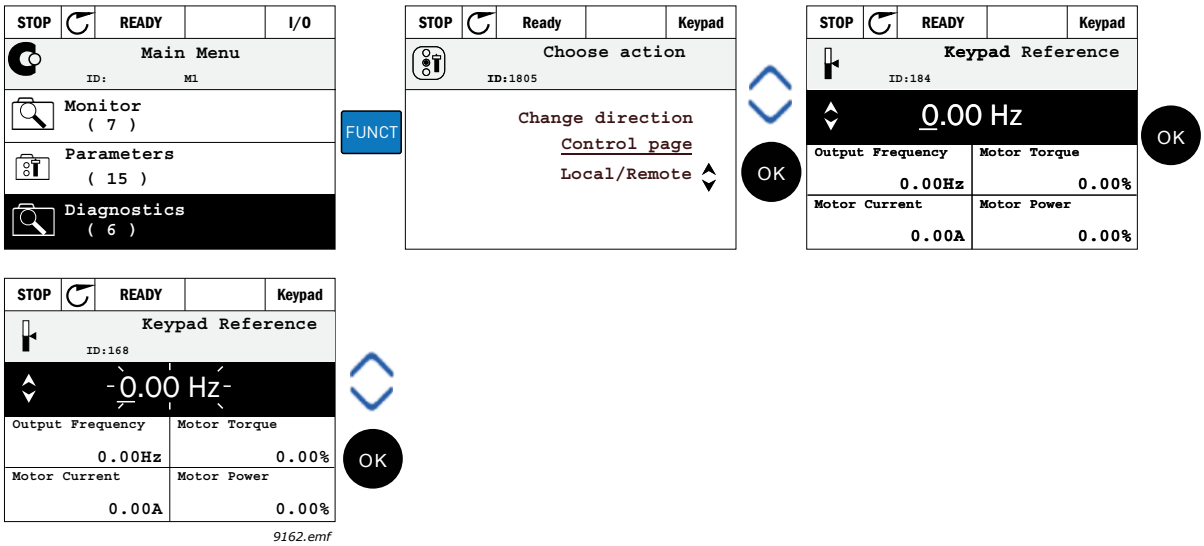

Figure 65. Accessing Control page.

Changing direction

Rotation direction of the motor can quickly be changed by applying the FUNCT button. **NOTE!** *Changing direction* command is not visible in the menu unless the selected control place is *Local*.

1. Anywhere in the menu structure, push the Funct button.
2. Push the Arrow up or the Arrow down button to select Change direction and confirm with the OK button.
3. Then choose the direction you wish to run the motor to. The actual rotation direction is blinking. Confirm with the OK button.
4. The rotation direction changes immediately and the arrow indication in the status field changes.

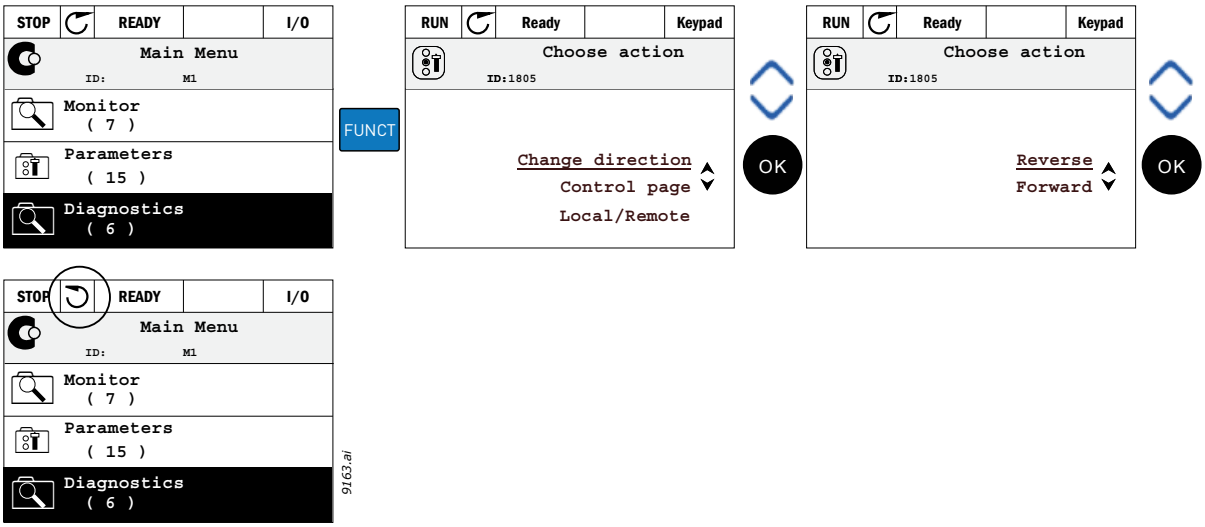

Figure 66. Changing direction.

Quick edit

Through the *Quick edit* functionality you can quickly access the desired parameter by entering the parameter's ID number.

1. Anywhere in the menu structure, push the FUNCT button.
2. Push the Arrow up or the Arrow down buttons to select Quick Edit and confirm with the OK button.
3. Then enter the ID number of parameter or monitoring value you wish to access. Press OK button to confirm.
4. Requested Parameter/Monitoring value appears on the display (in editing/monitoring mode.)

Copying parameters

NOTE: This feature is available with graphical keypad only.

The parameter copy function can be used to copy parameters from one drive to another.

The parameters are first saved to the keypad, then the keypad is detached and connected to another drive. Finally the parameters are downloaded to the new drive restoring them from the keypad.

Before any parameters can successfully be copied from one drive to another the drive has to be stopped when the parameters are downloaded.

- First go into *User settings* menu and locate the *Parameter backup* submenu. In the *Parameter backup* submenu, there are three possible functions to be selected:
- *Restore factory defaults* will re-establish the parameter settings originally made at the factory.
- By selecting *Save to keypad* you can copy all parameters to the keypad.
- *Restore from keypad* will copy all parameters from keypad to a drive.

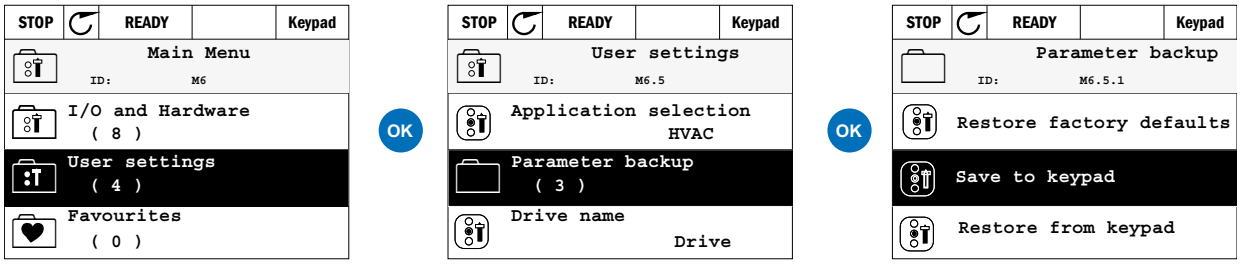

Figure 67. Parameter copy.

NOTE: If the keypad is changed between drives of different sizes, the copied values of these parameters will not be used:

Motor nominal current (P3.1.1.4)
Motor nominal voltage (P3.1.1.1)
Motor nominal speed (P3.1.1.3)
Motor nominal power (P3.1.1.6)
Motor nominal frequency (P3.1.1.2)
Motor cos phi (P3.1.1.5)
Switching frequency (P3.1.2.3)
Motor current limit (P3.1.3.1)
Stall current limit (P3.9.3.2)
Stall time limit (P3.9.3.3)
Stall frequency (P3.9.3.4)
Maximum frequency (P3.3.1.2)

Help texts

The graphical keypad features instant help and information displays for various items.

All parameters offer an instant help display. Select Help and press the OK button.

Text information is also available for faults, alarms and the startup wizard.

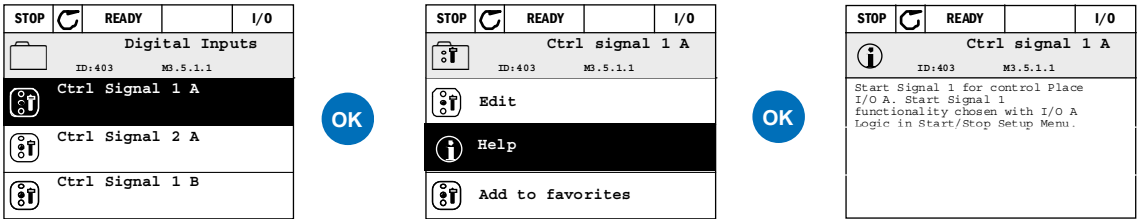

Figure 68. Help text example.

Adding item to favourites

You might need to refer to certain parameter values or other items often. Instead of locating them one by one in the menu structure, you may want to add them to a folder called *Favorites* where they can easily be reached.

To add an item to the Favorites.

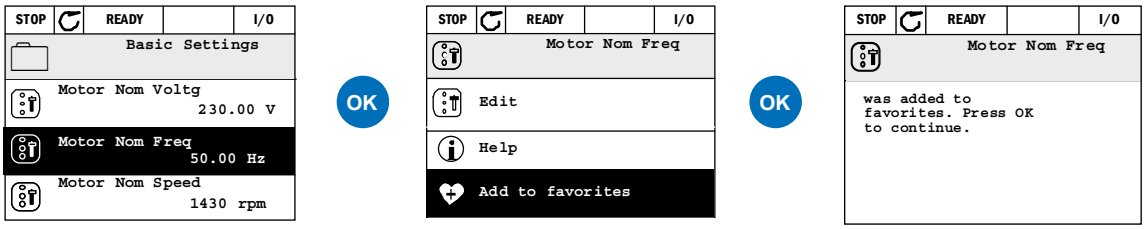

Figure 69. Adding item to Favorites.

8.2.6 VACON® KEYPAD WITH TEXT SEGMENT DISPLAY

You can also choose a *Keypad with text segment display* (Text keypad) for your user interface. It has mainly the same functionalities as the keypad with graphical display although some of these are somewhat limited.

8.2.6.1 Keypad display

The keypad display indicates the status of the motor and the drive and any irregularities in motor or drive functions. On the display, the user sees information about his present location in the menu structure and the item displayed. If the text on the text line is too long to fit in the display, the text will scroll from left to right to reveal the whole text string.

8.2.6.2 Main menu

The data on the control keypad are arranged in menus and submenus. Use the Up and Down arrows to move between the menus. Enter the group/item by pressing the OK button and return to the former level by pressing the Back/Reset button.

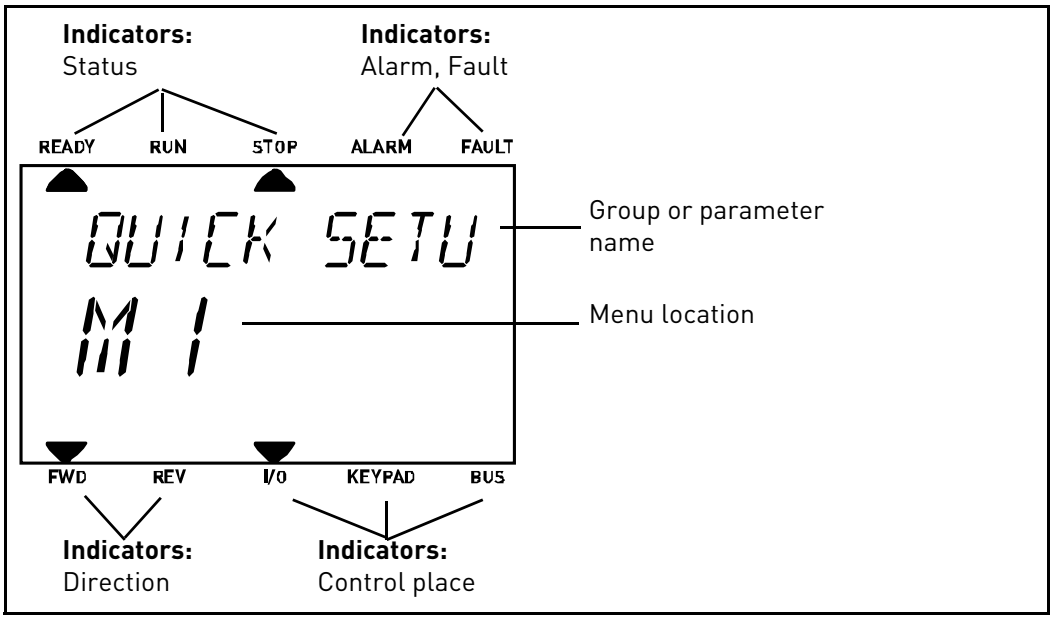

8.2.6.3 Using the keypad

Editing values

Change value of a parameter following the procedure below:

1. Locate the parameter.
2. Enter the Edit mode by pressing OK.
3. Set new value with the arrow buttons up/down. You can also move from digit to digit with the arrow buttons left/right if the value is numerical and change then the value with the arrow buttons up/down.
4. Confirm change with OK button or ignore change by returning to previous level with Back/ Reset button.

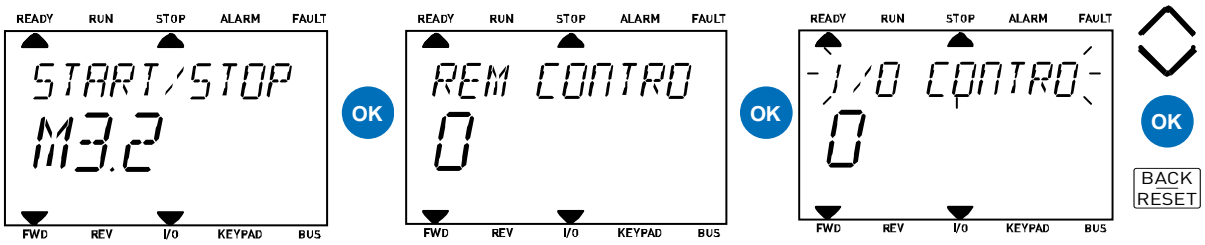

Figure 70. Editing values.

Resetting fault

Instructions for how to reset a fault can be found in chapter 8.2.7.

Function button

The FUNCT button is used for four functions:

1. to quickly access the Control page,
2. to easily change between the Local (Keypad) and Remote control places,
3. to change the rotation direction and
4. to quickly edit a parameter value.

Control places

The *control place* is the source of control where the drive can be started and stopped. Every control place has its own parameter for selecting the frequency reference source. The *Local control place* is always the keypad. The *Remote control place* is determined by parameter P3.2.1 (I/O or Fieldbus). The selected control place can be seen on the status bar of the keypad.

Remote control place

I/O A, I/O B and Fieldbus can be used as remote control places. I/O A and Fieldbus have the lowest priority and can be chosen with parameter P3.2.1 *(Rem Control Place)*. I/O B, again, can bypass the remote control place selected with parameter P3.2.1 using a digital input. The digital input is selected with parameter P3.5.1.7 *(I/O B Ctrl Force)*.

Local control

Keypad is always used as control place while in local control. Local control has higher priority than remote control. Therefore, if, for example, bypassed by parameter P3.5.1.7 through digital input while in *Remote*, the control place will still switch to Keypad if *Local* is selected. Switching between Local and Remote Control can be done by pressing the FUNCT-button on the keypad or by using the "Local/Remote" (ID211) parameter.

Changing control places

Change of control place from *Remote* to *Local* (keypad).

1. Anywhere in the menu structure, push the FUNCT button.
2. Using the arrow buttons, select Local/Remote and confirm with the OK button.
3. On the next display, select Local or Remote and again confirm with the OK button.
4. The display will return to the same location as it was when the *FUNCT* button was pushed. However, if the Remote control place was changed to Local (Keypad) you will be prompted for keypad reference.

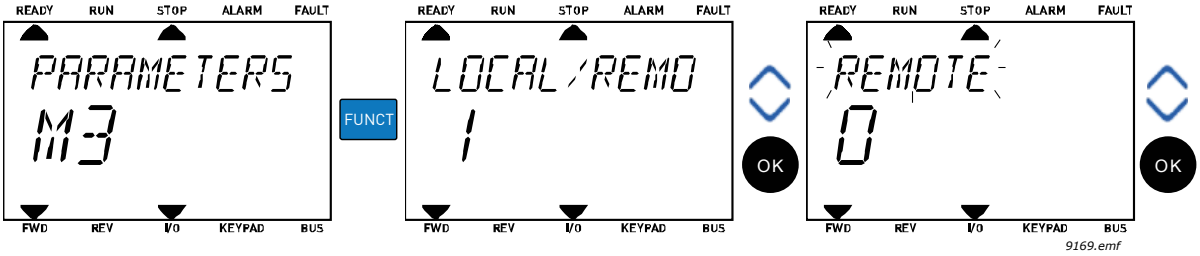

Figure 71. Changing control places.

Accessing the control page

The *Control page* is meant for easy operation and monitoring of the most essential values.

1. Anywhere in the menu structure, push the *FUNCT* button.
2. Push the *Arrow up* or the *Arrow down* button to select *Control page* and confirm with the *OK* button.
3. The control page appears
   If keypad control place and keypad reference are selected to be used you can set the *Keypad Reference* after having pressed the *OK* button. If other control places or reference values are used the display will show Frequency reference which is not editable.

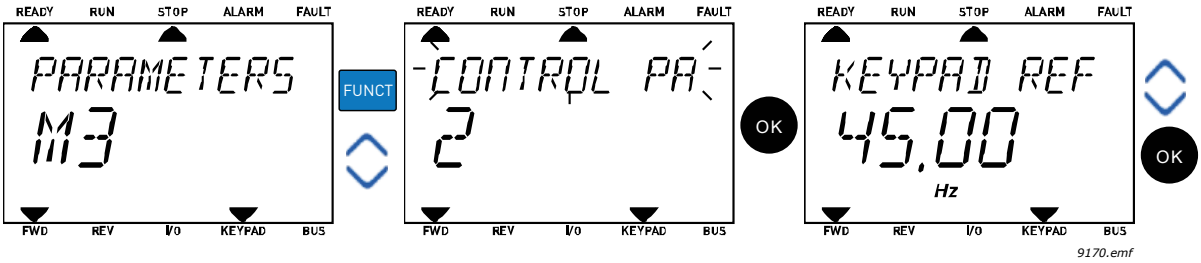

Figure 72. Accessing Control page.

Changing direction

Rotation direction of the motor can quickly be changed by applying the FUNCT button.**NOTE!** *Changing direction* command is not visible in the menu unless the selected control place is *Local*.

1. Anywhere in the menu structure, push the Funct button.
2. Push the Arrow up or the Arrow down button to select Change direction and confirm with the OK button.
3. Then choose the direction you wish to run the motor to. The actual rotation direction is blinking. Confirm with the OK button.
4. The rotation direction changes immediately and the arrow indication in the status field changes.

Quick edit

Through the *Quick edit* functionality you can quickly access the desired parameter by entering the parameter's ID number.

1. Anywhere in the menu structure, push the FUNCT button.
2. Push the Arrow up or the Arrow down buttons to select Quick Edit and confirm with the OK button.
3. Then enter the ID number of parameter or monitoring value you wish to access. Press OK button to confirm.
4. Requested Parameter/Monitoring value appears on the display (in editing/monitoring mode.)

8.2.7 FAULT TRACING

When an unusual operating condition is detected by the AC drive control diagnostics, the drive initiates a notification visible, for example, on the keypad. The keypad will show the code, the name and a short description of the fault or alarm.

The notifications vary in consequence and required action. *Faults* make the drive stop and require reset of the drive. *Alarms* inform of unusual operating conditions but the drive will continue running. *Info* may require resetting but do not affect the functioning of the drive.

For some faults you can program different responses in the application. See parameter group Protections.

The fault can be reset with the *Reset button* on the control keypad or via the I/O terminal. The faults are stored in the Fault history menu which can be browsed. The different fault codes you will find in the table below.

NOTE: When contacting distributor or factory because of a fault condition, always write down all texts and codes on the keypad display.

Fault appears

When a fault appears and the drive stops examine the cause of fault, perform the actions advised here and reset the fault as instructed below.

1. With a long (1 s) press on the *Reset* button on the keypad or
2. By entering the *Diagnostics* Menu (M4), entering *Reset faults* (M4.2) and selecting *Reset faults* parameter.
3. **For keypad with LCD display only:** By selecting value *Yes* for the parameter and clicking OK.

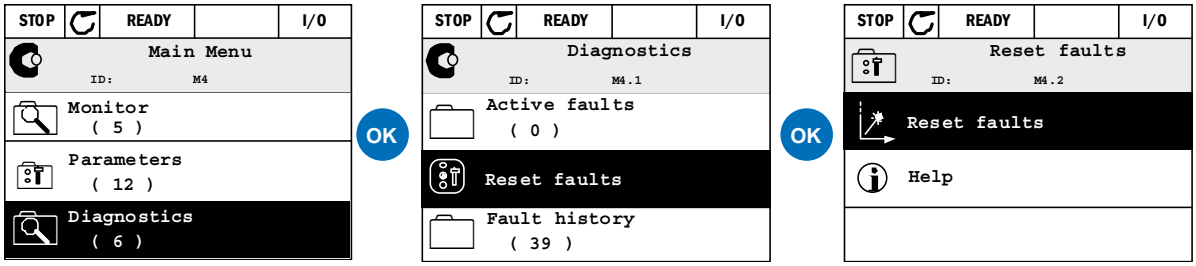

Figure 73. Diagnostic menu with graphical keypad.

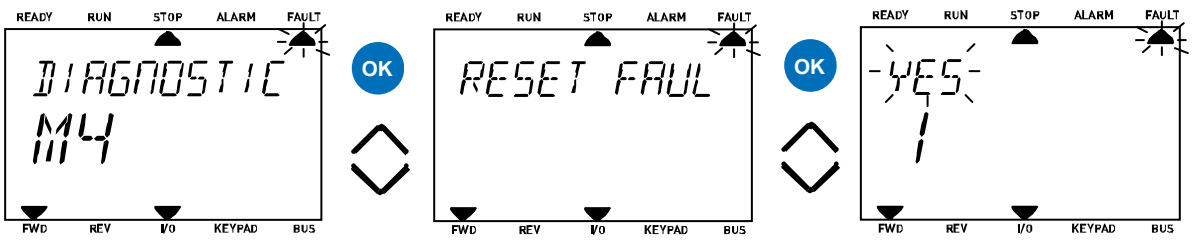

Figure 74. Diagnostic menu with text keypad.

8.2.7.1 Fault History

In menu M4.3 Fault history you find the maximum number of 40 occurred faults. On each fault in the memory you will also find additional information, see below.

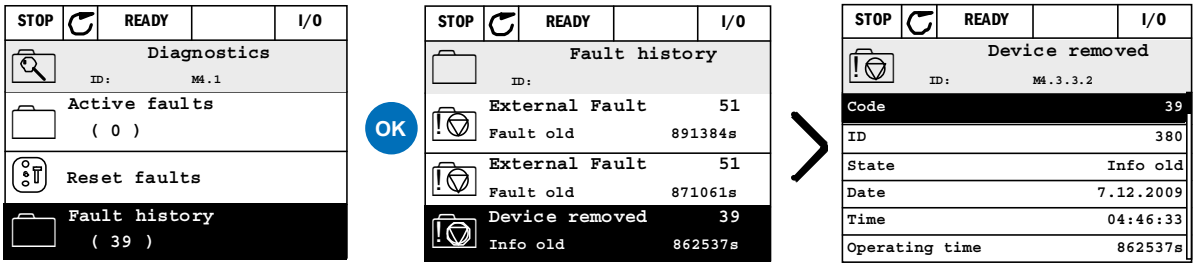

Figure 75. Fault history menu with graphical keypad.

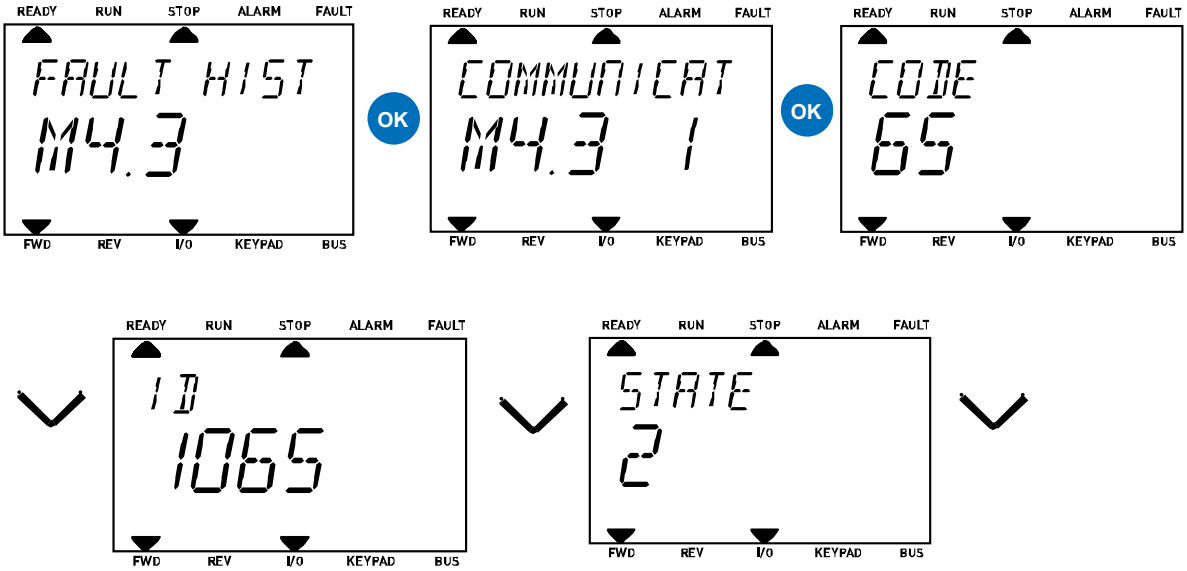

Figure 76. Fault history menu with text keypad.

8.2.7.2 Fault codes

Fault code	Fault ID	Fault name	Possible cause	Remedy
1	1	Overcurrent (hardware fault)	AC drive has detected too high a current (>4*I_H) in the motor cable: • sudden heavy load increase • short circuit in motor cables • unsuitable motor	Check loading. Check motor. Check cables and connections. Make identification run. Check ramp times.
	2	Overcurrent (software fault)		
2	10	Overvoltage (hardware fault)	The DC-link voltage has exceeded the limits defined. • too short a deceleration time • brake chopper is disabled • high overvoltage spikes in supply • Start/Stop sequence too fast	Make deceleration time longer. Use brake chopper or brake resistor (available as options). Activate overvoltage controller. Check input voltage.
	11	Overvoltage (software fault)		
3	20	Earth fault (hardware fault)	Current measurement has detected that the sum of motor phase current is not zero. • insulation failure in cables or motor	Check motor cables and motor.
	21	Earth fault (software fault)		
5	40	Charging switch	The charging switch is open, when the START command has been given. • faulty operation • component failure	Reset the fault and restart. Should the fault re-occur, contact the distributor near to you.
7	60	Saturation	Various causes: • defective component • brake resistor short-circuit or overload	Cannot be reset from keypad. Switch off power. DO NOT RE-CONNECT POWER! Contact factory. If this fault appears simultaneously with F1, check motor cables and motor.

Table 36. Fault codes and descriptions.

Fault code	Fault ID	Fault name	Possible cause	Remedy
8	600	System fault	Communication between control board and power unit has failed.	Reset the fault and restart. Should the fault re-occur, contact the distributor near to you.
	601		Communication between control board and power unit has interference, but it is still working.	
	602		Watchdog has reset the CPU	
	603		Voltage of auxiliary power in power unit is too low.	
	604		Phase fault: Voltage of an output phase does not follow the reference	
	605		CPLD has faulted but there is no detailed information about the fault	
	606		Control and power unit software are incompatible	Update software. Should the fault re-occur, contact the distributor near to you.
	607		Software version cannot be read. There is no software in power unit.	Update power unit software. Should the fault re-occur, contact the distributor near to you.
	608		CPU overload. Some part of the software (for example application) has caused an overload situation. The source of fault has been suspended	Reset the fault and restart. Should the fault re-occur, contact the distributor near to you.
	609		Memory access has failed. For example, retain variables could not be restored.	
	610		Necessary device properties cannot be read.	
	614		Configuration error.	
	647		Software error	Update software. Should the fault re-occur, contact the distributor near to you.
	648		Invalid function block used in application. System software and application are not compatible.	
	649		Resource overload. Error when loading parameter initial values. Error when restoring parameters. Error when saving parameters.	
9	80	Undervoltage (fault)	DC-link voltage is under the voltage limits defined. • most probable cause: too low a supply voltage • AC drive internal fault • defect input fuse • external charge switch not closed **NOTE!** This fault is activated only if the drive is in Run state.	In case of temporary supply voltage break reset the fault and restart the AC drive. Check the supply voltage. If it is adequate, an internal failure has occurred. Contact the distributor near to you.
	81	Undervoltage (alarm)		
10	91	Input phase	Input line phase is missing.	Check supply voltage, fuses and cable.

Table 36. Fault codes and descriptions.

Fault code	Fault ID	Fault name	Possible cause	Remedy
11	100	Output phase supervision	Current measurement has detected that there is no current in one motor phase.	Check motor cable and motor.
12	110	Brake chopper supervision (hardware fault)	No brake resistor installed. Brake resistor is broken. Brake chopper failure.	Check brake resistor and cabling. If these are ok, the chopper is faulty. Contact the distributor near to you.
	111	Brake chopper saturation alarm		
13	120	AC drive undertempera-ture (fault)	Too low temperature measured in power unit's heatsink or board. Heat-sink temperature is under -10°C.	Check the ambient tempera-ture
14	130	AC drive overtemperature (fault, heatsink)	Too high temperature measured in power unit's heatsink or board. Heat-sink temperature is over 100°C.	Check the correct amount and flow of cooling air. Check the heatsink for dust. Check the ambient tempera-ture. Make sure that the switching frequency is not too high in relation to ambient tempera-ture and motor load.
	131	AC drive overtemperature (alarm, heatsink)		
	132	AC drive overtemperature (fault, board)		
	133	AC drive overtemperature (alarm, board)		
15	140	Motor stalled	Motor is stalled.	Check motor and load.
16	150	Motor overtemperature	Motor is overloaded.	Decrease motor load. If no motor overload exists, check the temperature model parameters.
17	160	Motor underload	Motor is underloaded.	Check load.
19	180	Power overload (short-time supervision)	Drive power is too high.	Decrease load.
	181	Power overload (long-time supervision)		
25	240	Motor control fault	Start angle identification has failed.	Reset the fault and restart. Should the fault re-occur, con-tact the distributor near to you.
	241		Generic motor control fault.	
26	250	Start-up prevented	Start-up of the drive has been pre-vented. Run request is ON when a new software (firmware or application), parameter setting or any other file, which has affects the operation of the drive, has been loaded to drive.	Reset the fault and stop the AC drive. Load the software and start the AC drive.

Table 36. Fault codes and descriptions.

Fault code	Fault ID	Fault name	Possible cause	Remedy
30	290	Safe off	Unstable STO input A (spurious pulses detected).	Check the Safety switch and cabling. Reset the fault and restart. Should the fault re-occur, contact the distributor near to you.
	291	Safe off	Unstable STO input B (spurious pulses detected).	Check the Safety switch and cabling. Reset the fault and restart. Should the fault re-occur, contact the distributor near to you.
	520	Safe diagnostic	Diagnostic failure (STO inputs are in different state).	Check the Safety switch and cabling. Reset the fault and restart the drive. Should the fault re-occur, contact the distributor near to you.
	530	STO fault	STO function activated. Drive is in safe state.	Wait for STO inputs deactivation. Reset the fault and restart.
32	312	Fan cooling	Fan life time is up.	Change fan and reset fan life time counter.
33	320	Fire mode enabled	Fire mode of the drive is enabled. The drive's protections are not in use.	Check the parameter settings
37	360	Device changed (same type)	Option board changed for one previously inserted in the same slot. The board's parameter settings are saved.	Device is ready for use. Old parameter settings will be used.
38	370	Device changed (same type)	Option board added. The option board was previously inserted in the same slot. The board's parameter settings are saved.	Device is ready for use. Old parameter settings will be used.
39	380	Device removed	Option board removed from slot.	Device no longer available.
40	390	Device unknown	Unknown device connected (power unit/option board)	Device no longer available.
41	400	IGBT temperature	IGBT temperature (unit temperature + I_2T) is too high.	Check loading. Check motor size. Make identification run.
44	430	Device changed (different type)	Option board changed or Power unit changed. No parameter settings are saved.	Set the option board parameters again if option board was changed. Set converter parameters again if power unit was changed.
45	440	Device changed (different type)	Option board added. The option board was not previously present in the same slot. No parameter settings are saved.	Set the option board parameters again.
46	662	Real Time Clock	RTC battery voltage level is low and the battery should be changed.	Replace the battery.
47	663	Software updated	Software of the drive has been updated (either the whole software package or application).	No actions needed.

Table 36. Fault codes and descriptions.

Fault code	Fault ID	Fault name	Possible cause	Remedy
50	**1050**	AI low fault	At least one of the available analogue input signals has gone below 50% of the defined minimum signal range. Control cable is broken or loose. Signal source has failed.	Change the failed parts. Check the analog input circuit. Check that parameter *AI1 signal range* is set correctly.
51	**1051**	External Fault	Fault activated by digital input.	Check the digital input or the device connected to it. Check the parameter settings.
52	**1052 1352**	Keypad communication fault	The connection between the control keypad and frequency converter is broken	Check keypad connection and possible keypad cable
53	**1053**	Fieldbus communication fault	The data connection between the fieldbus master and fieldbus board is broken	Check installation and fieldbus master.
54	**1654**	Slot D fault	Defective option board or slot	Check board and slot.
	1754	Slot E fault		
57	**1057**	Identification	Identification run has failed.	Check that motor is connected to the drive. Ensure that there is no load on the motor shaft. Ensure that the start command will not be removed before completion of identification run.
58	**1058**	Mechanical brake	Actual status of mechanical brake remains different from the control signal for longer than what is defined.	Check the status and connections of the mechanical brake.
63	**1063**	Quick Stop fault	The Quick stop function is activated	Find the cause for the quick stop activation. After you find it, correct it. Reset the fault and restart the drive. Once found and corrective actions taken, reset the fault and restart the drive.
	1367	Quick Stop alarm		
65	**1065**	PC communication fault	The data connection between the PC and frequency converter is broken	
66	**1066**	Thermistor fault	The thermistor input has detected an increase of motor temperature	Check motor cooling and load. Check thermistor connection (If thermistor input is not in use it has to be short circuited)
68	**1301**	Maintenance counter 1 alarm	Maintenance counter has reached the alarm limit.	Carry out the needed maintenance and reset counter.
	1302	Maintenance counter 2 alarm	Maintenance counter has reached the alarm limit.	Carry out the needed maintenance and reset counter.
	1303	Maintenance counter 3 alarm	Maintenance counter has reached the alarm limit.	Carry out the needed maintenance and reset counter.
	1304	Maintenance counter 4 alarm	Maintenance counter has reached the alarm limit.	Carry out the needed maintenance and reset counter.

Table 36. Fault codes and descriptions.

Fault code	Fault ID	Fault name	Possible cause	Remedy
69	1310	Fieldbus mapping error	Non-existing ID number is used for mapping values to Fieldbus Process Data Out.	Check parameters in Fieldbus Data Mapping menu.
	1311		Not possible to convert one or more values for Fieldbus Process Data Out.	The value being mapped may be of undefined type. Check parameters in Fieldbus Data Mapping menu.
	1312		Overflow when mapping and converting values for Fieldbus Process Data Out (16-bit).	
76	1076	Start prevented	Start command is active and was blocked in order to prevent unintentional rotation of the motor during the first power-up.	Reset drive to restore the normal operation. The need of restart depends on the parameter settings.
77	1077	>5 connections	Maximum number of 5 simultaneous active fieldbus or PC tool connections supported by the application exceeded.	Remove excessive active connections.
100	1100	Soft fill time-out	The Soft fill function in the PID controller has timed out. The wanted process value was not achieved within time.	Reason might be a pipe burst.
101	1101	Process supervision fault (PID1)	PID controller: Feedback value outside of supervision limits (and the delay if set).	Check settings.
105	1105	Process supervision fault (PID2)	PID controller: Feedback value outside of supervision limits (and the delay if set).	Check settings.
109	1109	Input pressure supervision	Input pressure supervision signal has gone below the alarm limit.	Check the process. Check the parameters Check the input pressure sensor and connections.
	1409		Input pressure supervision signal has gone below the fault limit.	
111	1315	Temperature fault 1	At least one of the selected temperature input signals has reached the alarm limit.	Find the cause of temperature raise. Check the temperature sensor and connections. Check that the temperature input is hard wired if no sensor is connected. See option board manual for further information.
	1316		At least one of the selected temperature input signals has reached the fault limit.	
112	1317	Temperature fault 2	At least one of the selected temperature input signals has reached the fault limit.	
	1318		At least one of the selected temperature input signals has reached the fault limit.	
113	1113	Pump running time	In the Multipump system, 1 or more of the pump runtime counters is above a user-specified alarm limit.	Do the necessary maintenance actions, reset the runtime counter and reset the alarm. See Pump running time counters.
	1313		In the Multipump system, 1 or more of the pump runtime counters is above a user-specified Fault limit	

Table 36. Fault codes and descriptions.

Fault code	Fault ID	Fault name	Possible cause	Remedy
300	700	Unsupported	The application is not compatible (it is unsupported).	Replace the application.
	701		The option board or the slot is not compatible (it is unsupported).	Remove the option board.

Table 36. Fault codes and descriptions.

8.3 Heater (arctic option)

8.3.1 Safety

This manual contains clearly marked cautions and warnings which are intended for your personal safety and to avoid any unintentional damage to the product or connected appliances.

Please read the information included in dangers carefully.

The optional heater allows the drive to operate in low temperature conditions down to -40°C. This option is intended to be installed inside the drive.

Only VACON® authorized, trained and qualified personnel are allowed to install and maintain this component.

8.3.2 Dangers

⚠	The components of the optional heater are live when the element is connected to mains potential. Coming into contact with this voltage is extremely dangerous and may cause death or severe injury.
⚠	The heater can be used only inside the drive and in combination with only the VACON® 100X. Before connecting the heater to mains, make sure that the VACON® 100X drive is closed firmly.

Table 37. Dangers

8.3.3 Technical data

The optional heater has to be supplied with single-phase 230V. The thermal element is always supplied and if the drive is connected at -40°C the drive will be heated up until the temperature of -10°C is exceeded. The heating is temperature controlled and an internal fan ensures that the air is equally distributed inside the enclosure.

The integrated relay output (switching capacity: 24VDC / 3A, 250VAC / 3A) can be used to control the power-up of the drive. The contact is closed when the internal temperature is higher than the minimum allowed value for the power-up (~ -10°C). This can be included and manage in the logic of the entire system. A bi-color LED (on the enclosure of this option), shows the status of the drive, ready or not-ready.

Heater connections		
Terminal	**Signal**	**Technical information**
L1	Line	Supply voltage input terminals: 1AC 230V 50Hz 500 mA
N	Neutral	
X1	Feedback relay output	Switching capacity: 24VDC / 3A 250VAC /3A

Table 38. Technical information on input and relay terminals.

8.3.4 FUSES

The recommended fuse types for the heater supply voltage are shown in the table below.

Fuses for heater supply voltage input - 230VAC		
gG/gL (IEC 60269-1) 500V	class T (UL& CSA) 600V	class J (UL& CSA) 600V
1A	1A	1A

Table 39. Fuses ratings.

8.3.5 MOUNTING INSTRUCTIONS: MM4 EXAMPLE

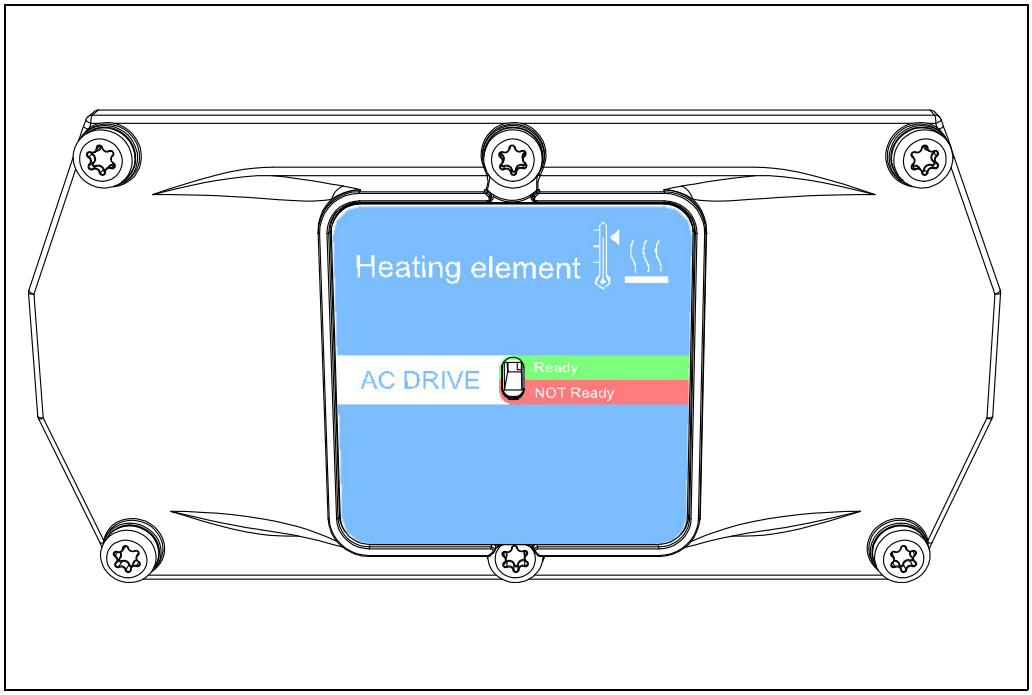

Figure 77. Heater option for MM4.

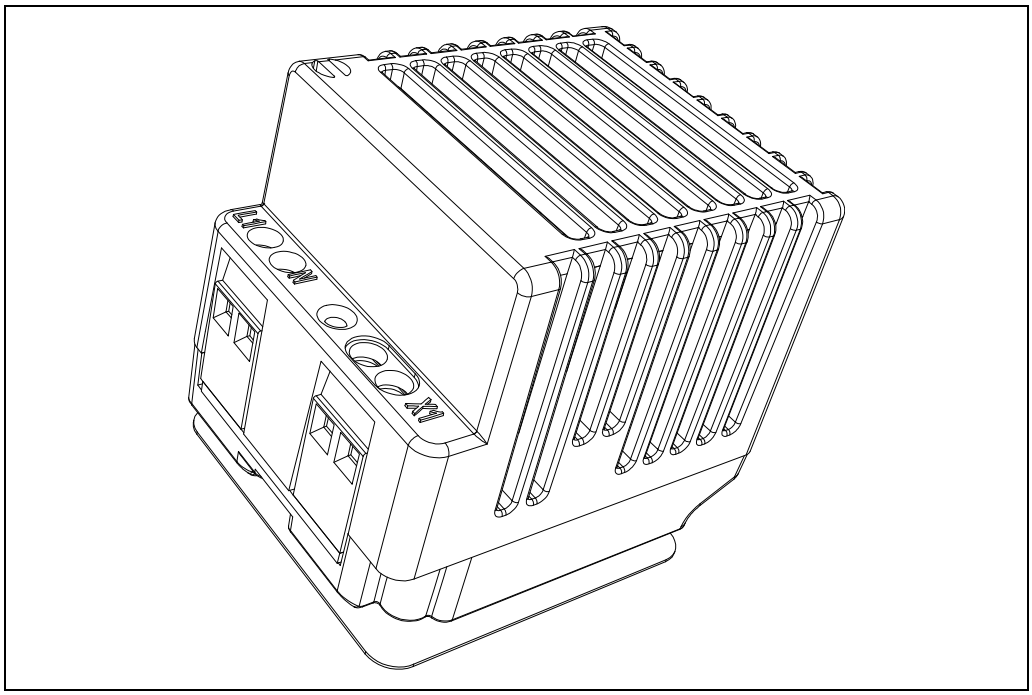

Figure 78. Heating element and terminals.

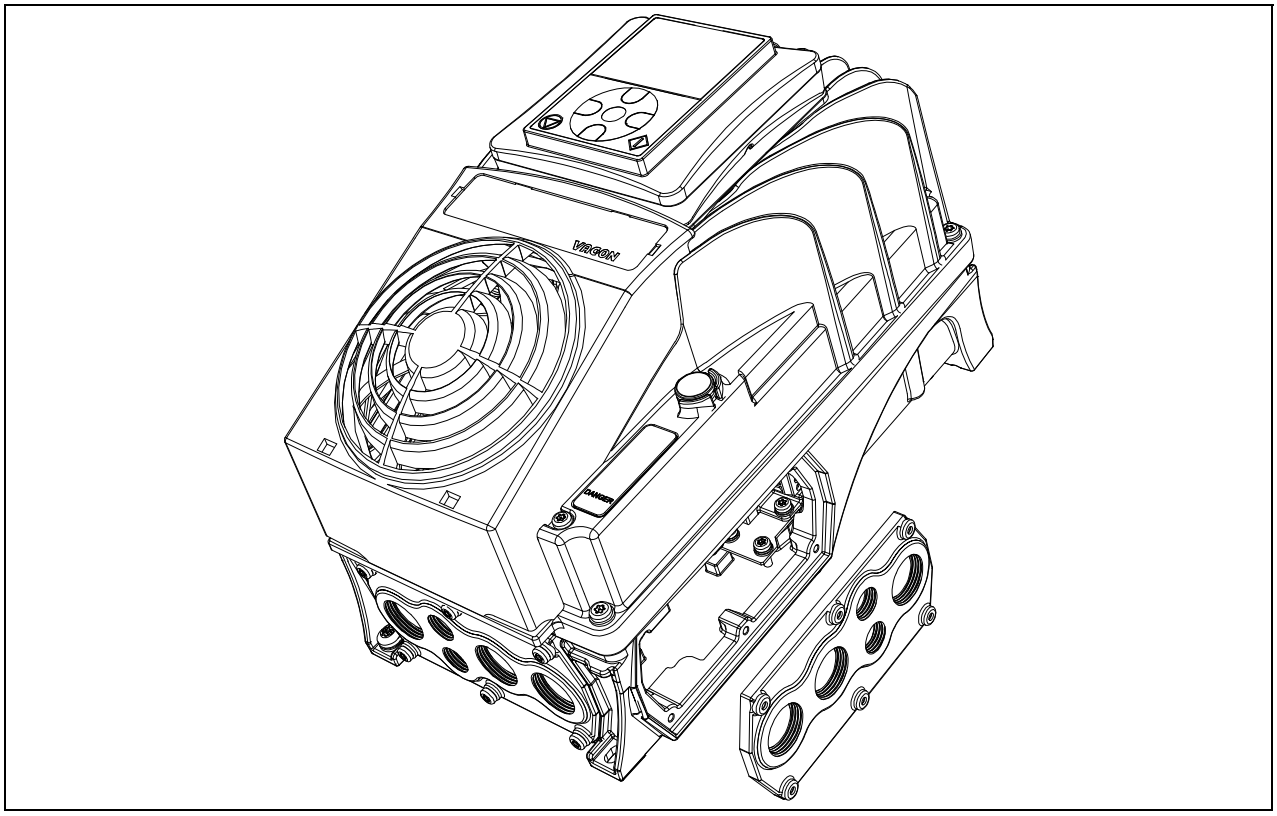

Figure 79. Remove the cable entry plate (right side example).

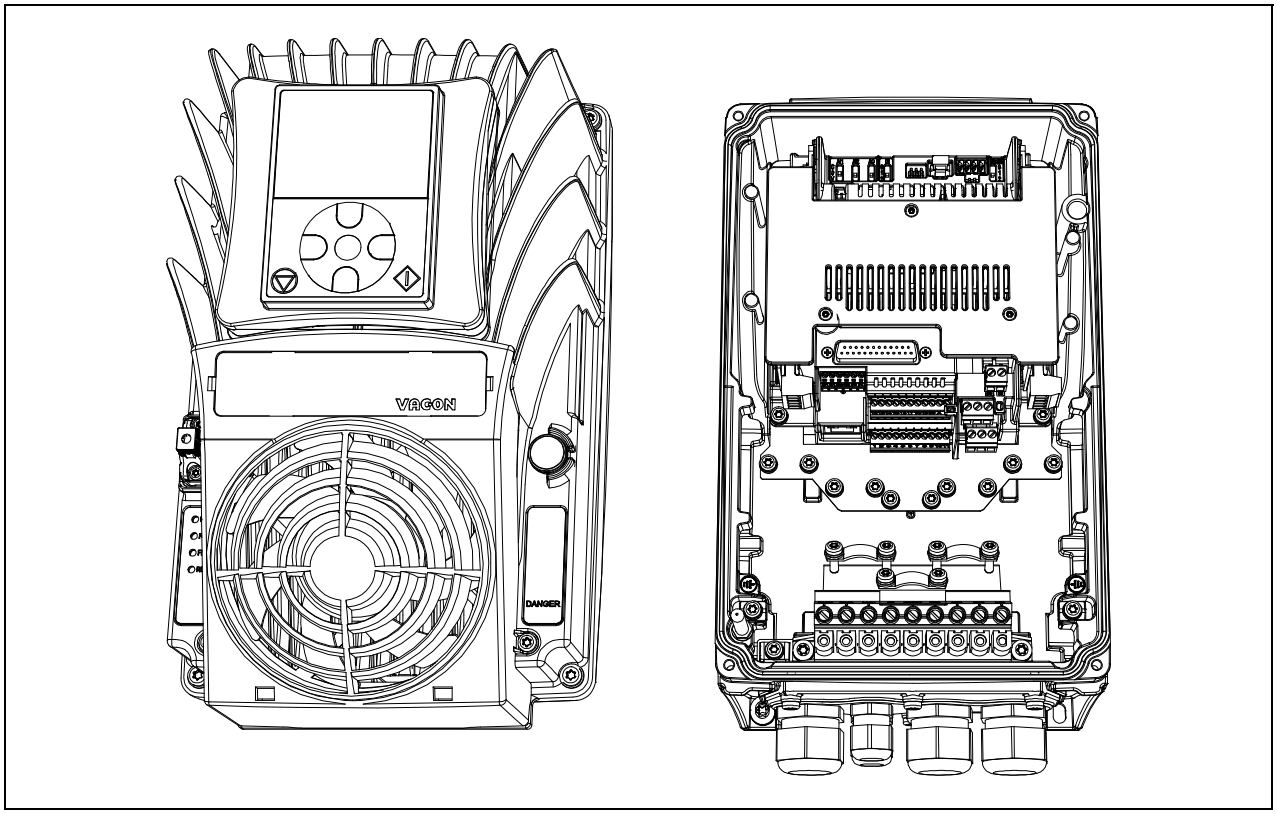

Figure 80. Remove the powerhead from the terminal box.

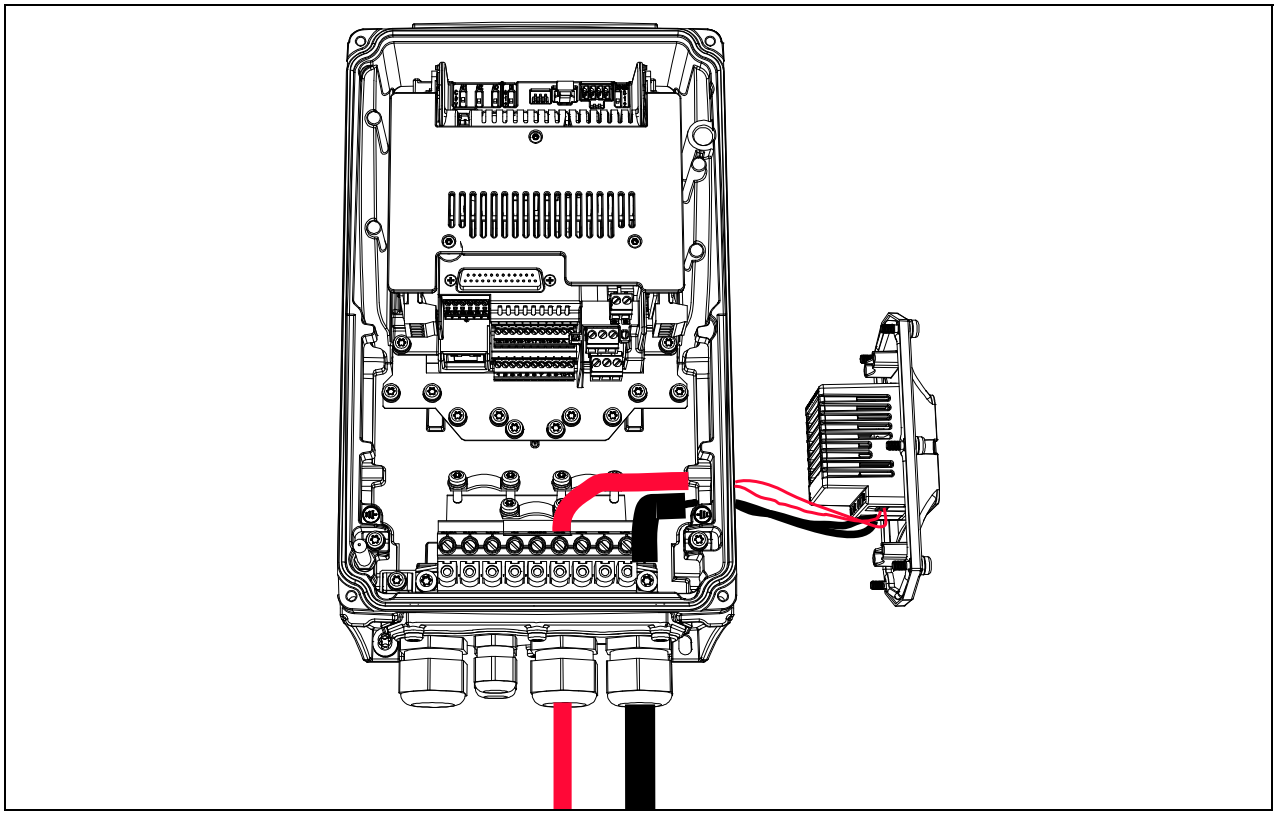

Figure 81. Connect the supply voltage (black cable) and the output relay (red cable) to the optional heater through the bottom cable entry plate. Color of the cables is only as example.

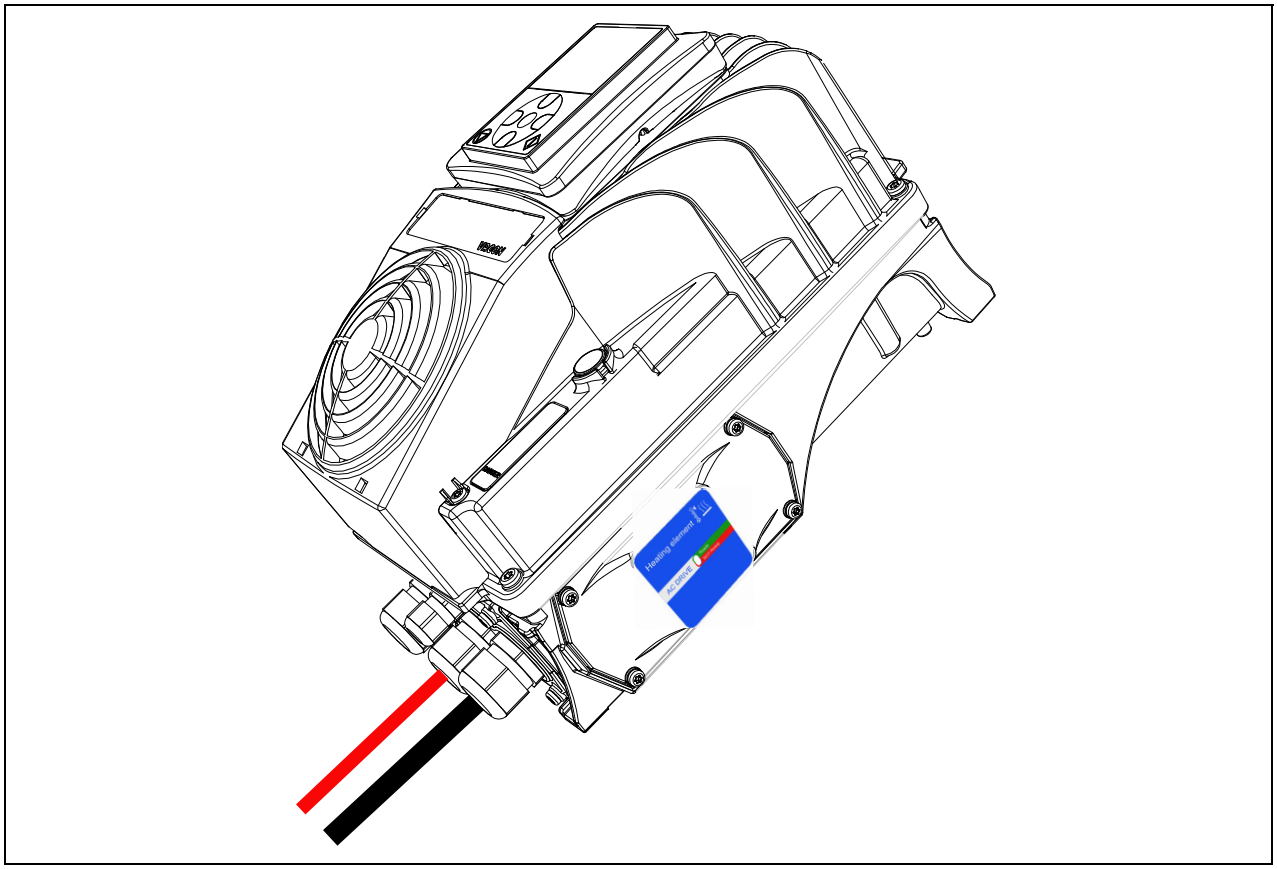

Figure 82. Mount the optional heater on the terminal box and then close the powerhead.

8.4 OPTION BOARDS

VACON® 100 X drive family embodies a wide selection of expander boards with which the available I/O of VACON® 100 X frequency converter can be increased and its versatility improved.

There are two board slots (labelled D and E) on the VACON® 100 X control board. To locate the slot, see chapter 5. Usually, when the AC drive is delivered from the factory, the control unit doesn't include any option board in the board slots.

The following option boards are supported:

Code	Description	Note
OPTB1	Option board with six bidirectional terminals.	With jumper blocks it's possible to use each terminal as digital input or as digital output.
OPTB2	I/O expander board with a thermistor input and two relay outputs.	
OPTB4	I/O expander board with one galvanically isolated analogue input and two galvanically isolated analogue outputs (standard signals 0(4)...20mA).	
OPTB5	I/O expander board with three relay outputs	
OPTB9	I/O expander board with five 42...240 VAC digital inputs and one relay output.	
OPTBF	I/O expander board with analogue output, digital output and relay output.	On the OPTBF board, there is one jumper block for selecting the analogue output mode (mA/V).
OPTBH	Temperature measurement board with three individual channels.	Supported sensors: PT100, PT1000, NI1000, KTY84-130, KTY84-150, KTY84-131
OPTBK	AS-interface option board	
OPTC4	Lonworks option board	Pluggable connector with screw terminals
OPTE3	Profibus DP option board	Pluggable connector with screw terminals
OPTE5	Profibus DP option board	9-pin Sub-D terminal
OPTE6	CANopen option board	
OPTE7	DeviceNet option board	

Table 40. Option boards supported in VACON® *100 X.*

See the Option boards User's Manual to use and install the option boards.

8.5 Flange adapter

VACON® 100 X is an IP66/Type 4X outdoor drive, designed to be installed as close as possible to the motor, minimizing the use of electrical rooms, integrating the drive as part of the machine, without the use of cabinets.

Vacon 100X drives are products than can be mounted directly onto the motor, machine or wherever the most efficient location for the drive is. This solution allows the machine designer, to use the available space in and around the machine, optimally. A decentralised solution provides a more flexible solution as an OEM manufacturer can deliver its machine in one piece, and there is no need to install the drives in a separate location. See the MM4 flange adapter in Figure 83.

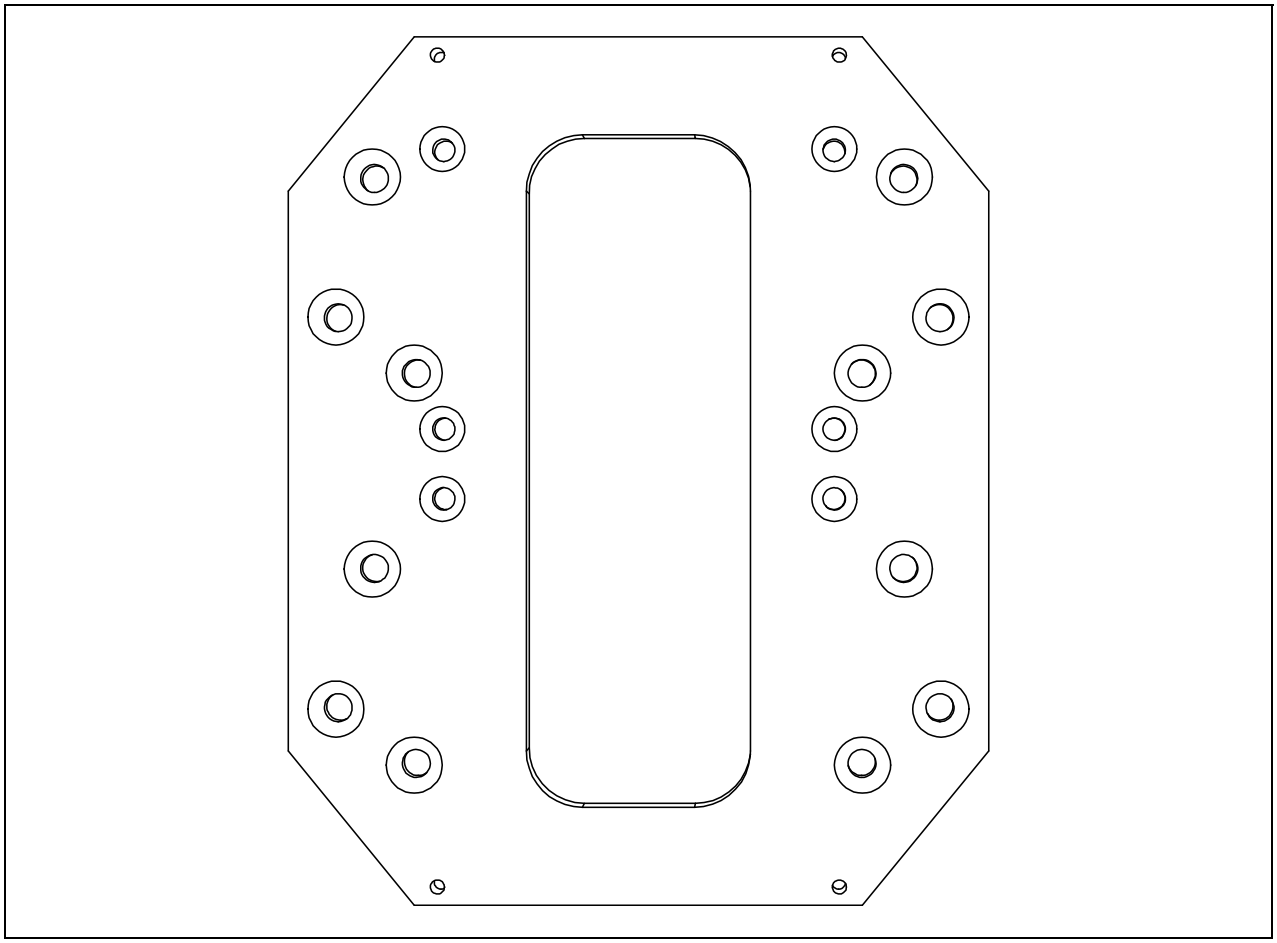

Figure 83. Flange adapter for MM4.

These flange adapters can be used, for example, with the following motor types:

- B3 - Foot mounting
- B34 - Foot - B14 face mounting
- B35 - Foot - B5 flange mounting

Compared to a traditional solution, with the AC drives located in an electrical room, a decentralised solution offers significant savings potential in cabling and installation costs. By locating the drive near the machine or onto the motor, the length of the motor cable will be minimized.

ENC-QMMF-MM04 flange adapter can be used with 5 different motor sizes while both ENC-QMMF-MM05 and ENC-QMMF-MM06 flange adapters can be connected only to 3 different motor sizes. See Table 41 for further details.

Table 41 shows the corresponding flange adapters for different motor sizes. See also the relations with the inverter frame sizes.

Flange adapter type code	Motor size	Power at 1500 rpm [kW]	Rated current at 1500 rpm [A]	A [mm]	B [mm]	Inverter frame size
ENC-QMMF-MM04	90S	1.1	2.89	140	100	MM4
	90L	1.5	3.67	140	125	
	100L	2.2/3	5.16/6.8	160	140	
	112M	4	8.8	190	140	
	132S	5.5	11.8	216	140	
ENC-QMMF-MM05	132M	7.5	15.6	216	178	MM5
	160M	11	22.6	254	210	
	160L	15	30.1	254	254	
ENC-QMMF-MM06	180M	18.5	36.1	279	241	MM6
	180L	22	42.5	279	279	
	200L	30	57.4	318	305	

Table 41. Correspondences between flange adapters, motors and inverter sizes.

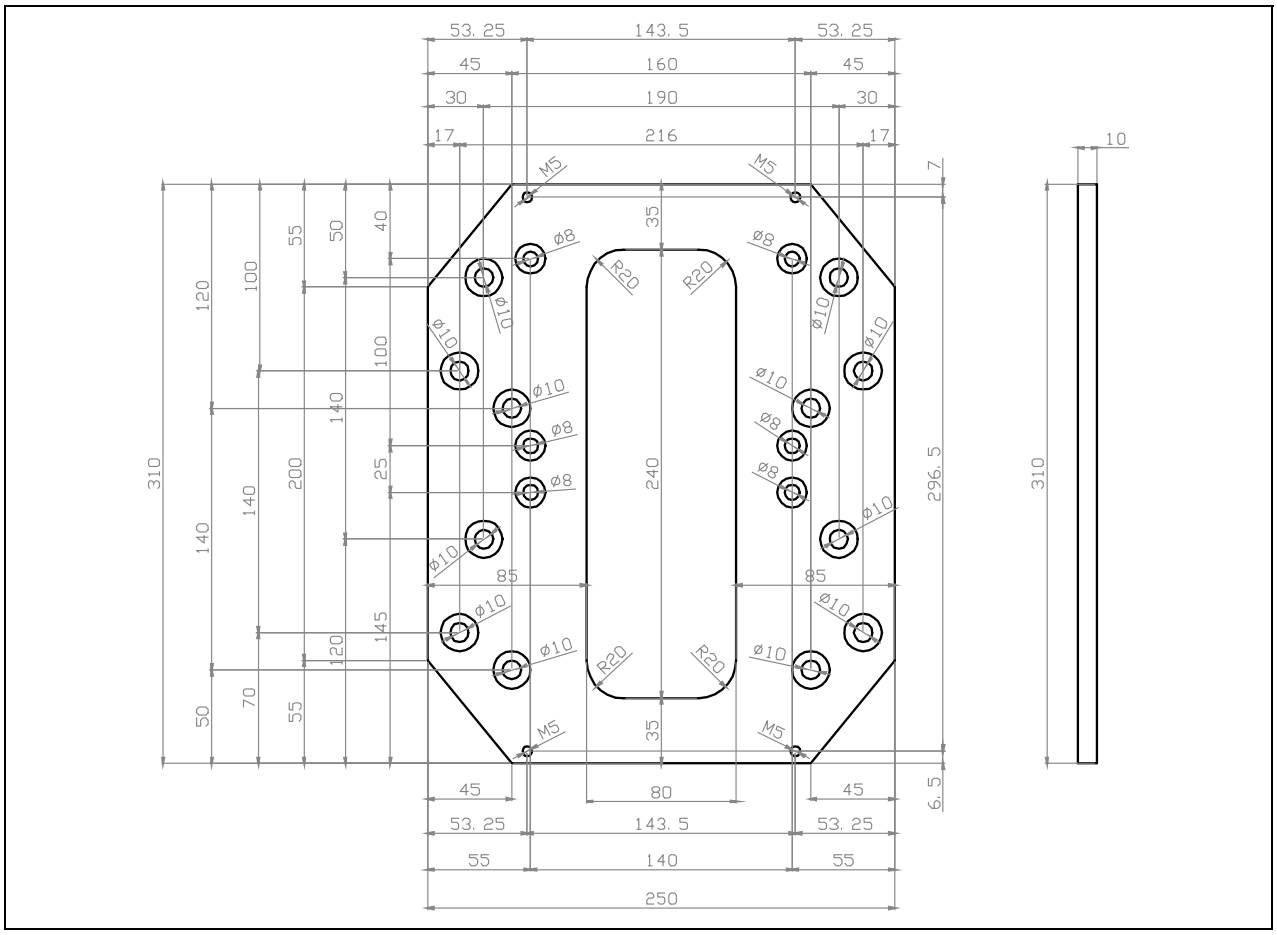

Figure 84. MM4 flange adapter dimensions.

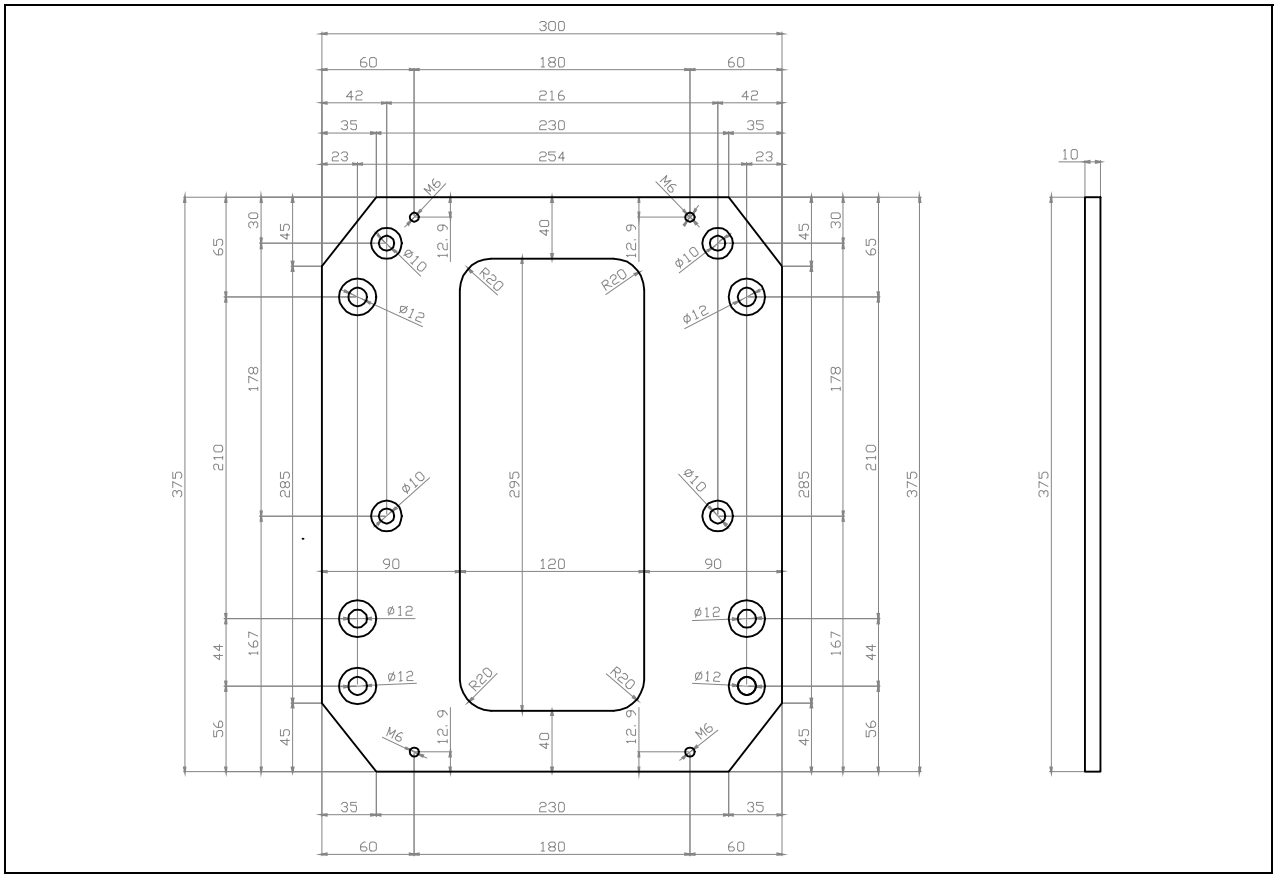

Figure 85. MM5 flange adapter dimensions.

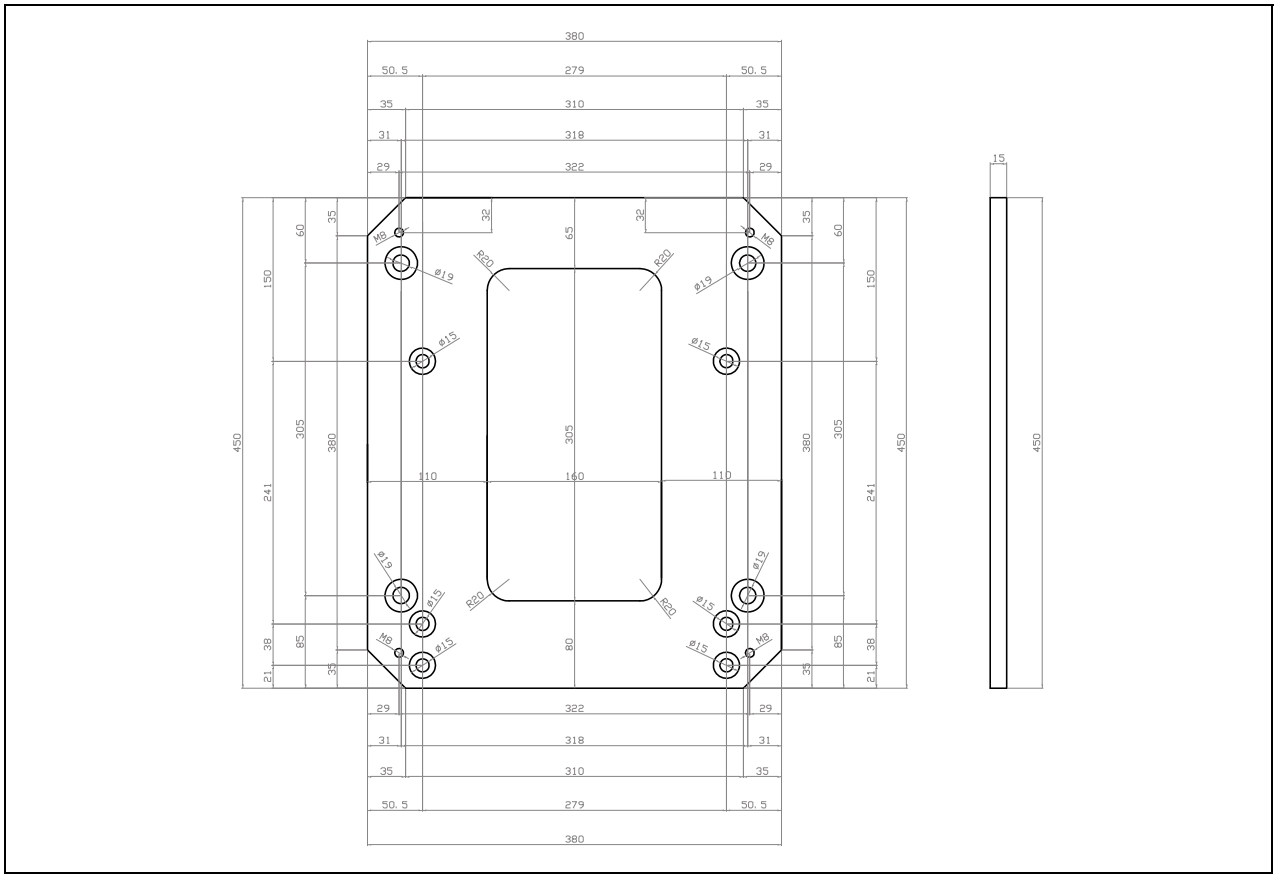

Figure 86. MM6 flange adapter dimensions.

8.5.1 Mounting instructions: MM4 Example

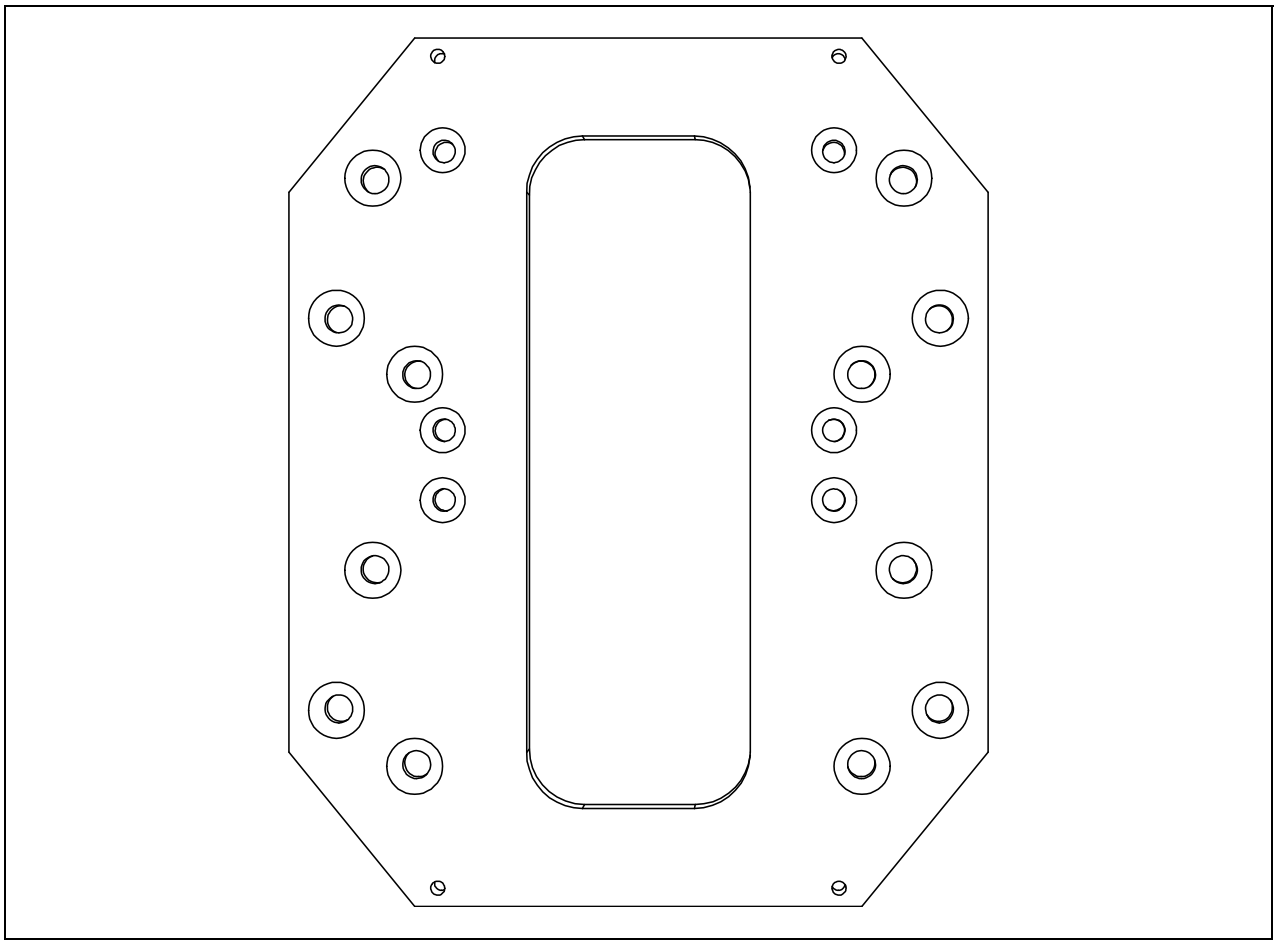

Figure 87. Flange adapter for MM4.

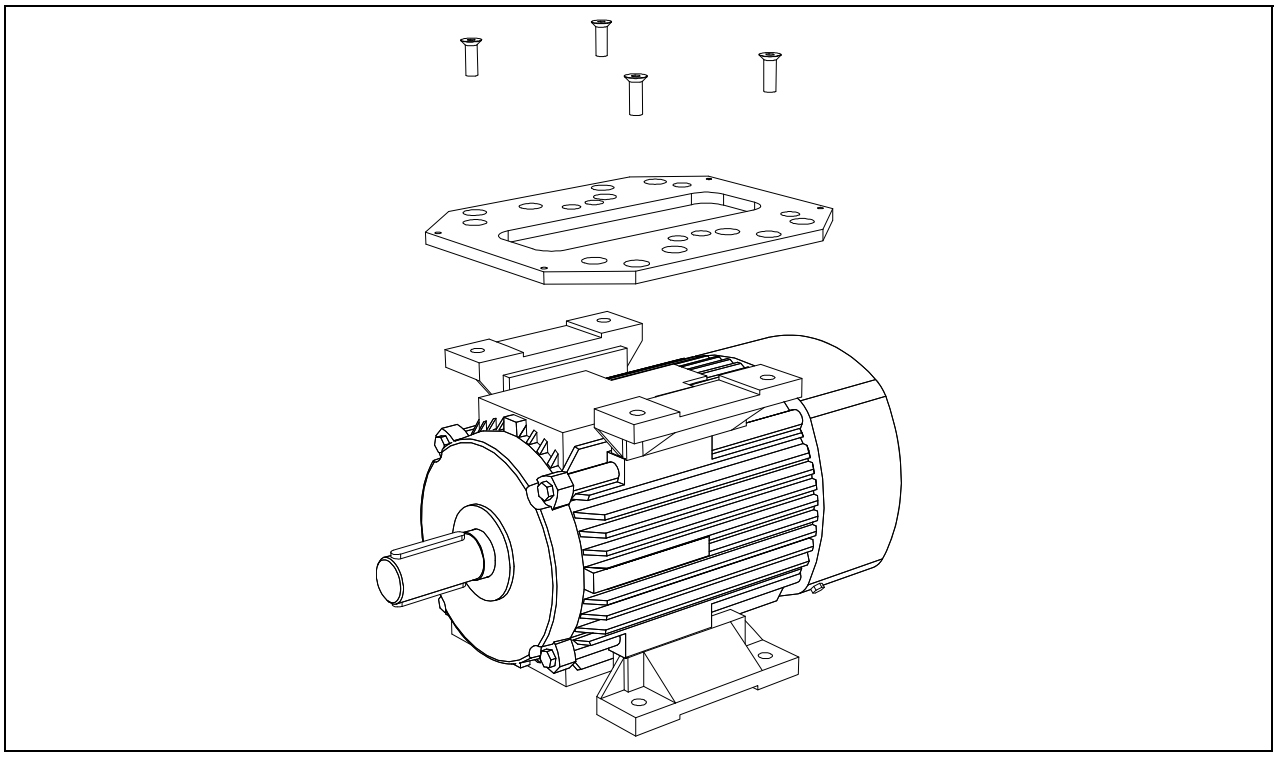

Figure 88. Mount the flange adapter on the motor.

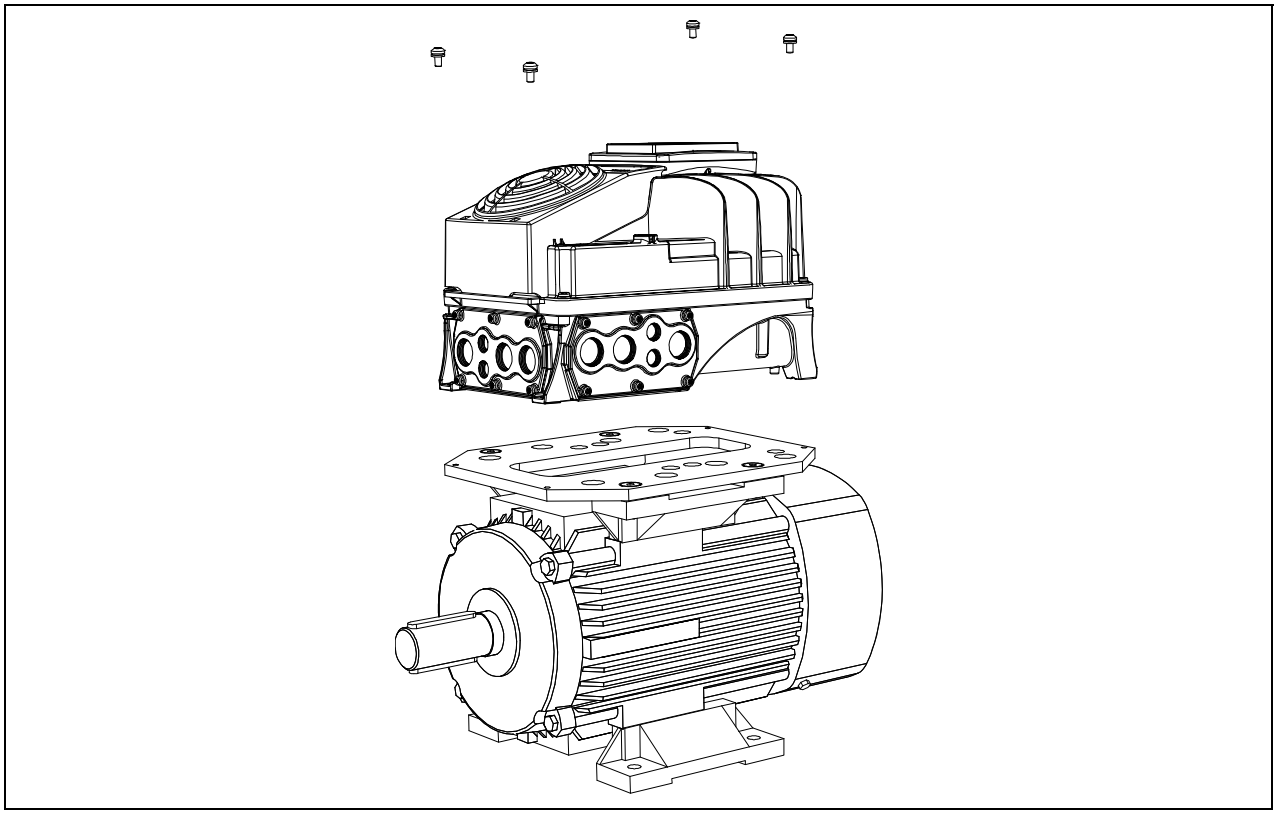

Figure 89. Mount the drive on the flange adapter using 4 screws.

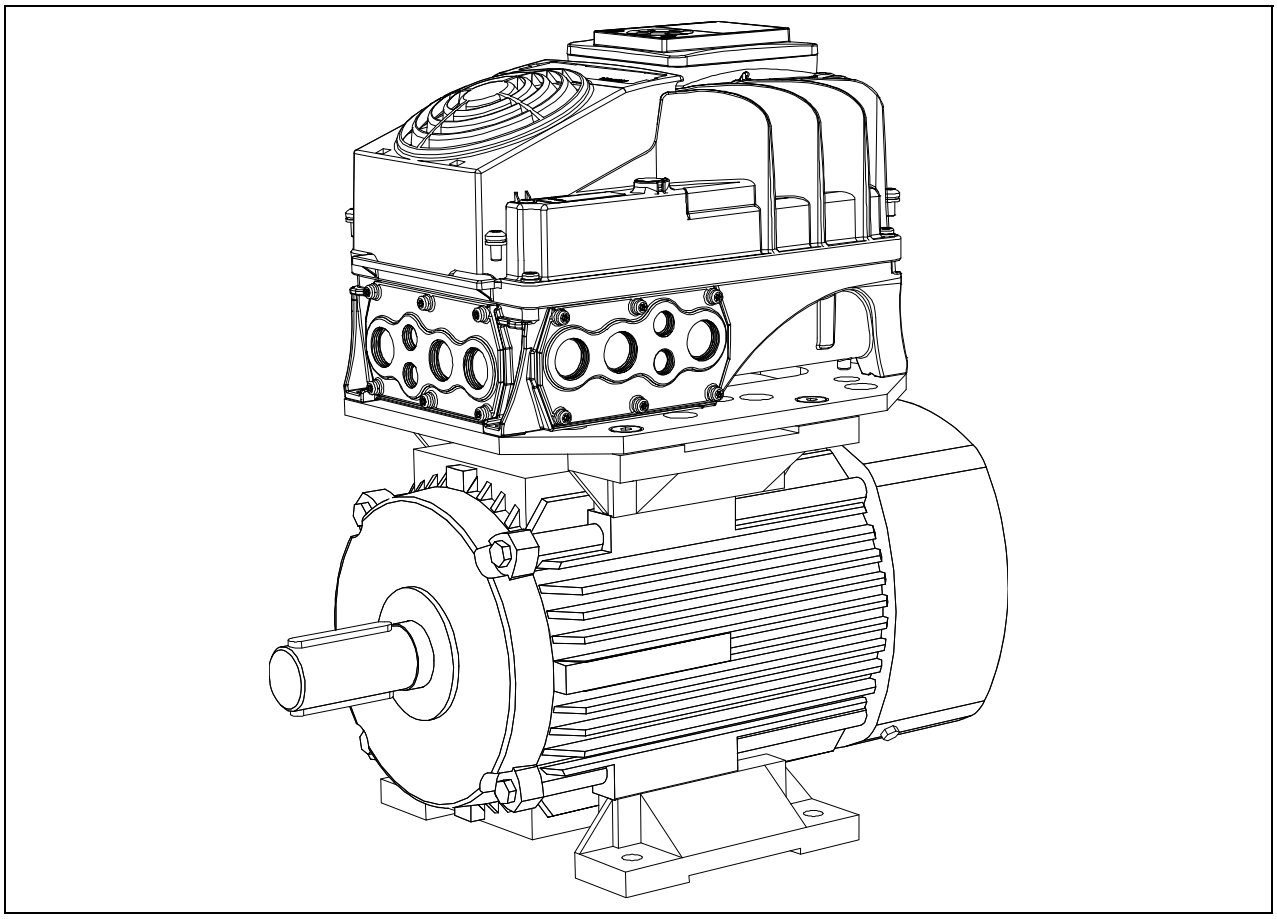

Figure 90. Drive mounted onto the motor.

9. SAFE TORQUE OFF

This chapter describes the Safe Torque Off (STO) function which is a functional safety feature present into VACON® 100 X drive products as standard.

9.1 GENERAL DESCRIPTION

The STO function brings the motor in no-torque-state as defined by 4.2.2.2 of the IEC 61800-5-2: *"Power that can cause rotation (or motion in the case of a linear motor) is not applied to the motor. The Power Drive System (Safety Related) will not provide energy to the motor which can generate torque (or force in the case of a linear motor)."*

Therefore, the STO function is suitable for applications that rely on the immediate removal of power to the actuator, resulting in an uncontrolled coast to stop (activated by an STO demand). **Additional protective measures need to be applied when an application requires a different stop method**.

9.2 WARNINGS

⚠	Designing of safety-related systems requires specialist knowledge and skills. Only qualified people are permitted to install and set up the STO function. The use of STO does not itself ensure safety. **An overall risk evaluation is required for ensuring that the commissioned system is safe.** Safety devices must be correctly incorporated into the entire system which must be designed in compliance with all relevant standards within the field of industry.
⚠	The information in this manual provides guidance on the use of the STO function. This information is in compliance with accepted practice and regulations at the time of writing. However, the end product/system designer is responsible for ensuring that the **end-system** is safe and in compliance with relevant regulations.
⚠	When a permanent magnet motor is used and in case of a multiple IGBT power semiconductor failure, when the STO option energizes the drive outputs to the off state, the drive system may still provide an alignment torque which maximally rotates the motor shaft by 180°/p (where p is the number of poles of the motor) before the torque production ceases.
⚠	Electronic means and contactors are not adequate for protection against electric shock. The Safe Torque Off function does not disconnect the voltage or the mains from the drive. Therefore hazardous voltages may still be present on the motor. If electrical or maintenance work has to be carried out on electrical parts of the drive or the motor, the drive has to be completely isolated from the main supply, e.g. using an external supply disconnecting switch (see EN60204-1).
⚠	This safety function corresponds to an uncontrolled stop in accordance with stop category 0 of IEC 60204-1. The STO function does not comply with Emergency Switching Off according to IEC 60204-1 (no galvanic insulation from the Mains in case the motor is stopped).
⚠	The STO function is not a prevention of unexpected start-up. To fulfil those requirements, additional external components are required according to appropriate standards and application requirements.
⚠	In circumstances where external influences (e.g. falling of suspended loads) are present additional measures (e.g. mechanical brakes) may be necessary to prevent any hazard.
⚠	STO shall not be used as a control for starting or stopping the drive.

9.3 STANDARDS

The STO function has been designed for use in accordance with the following standards:

Standards
IEC 61508, Parts 1-7
EN 61800-5-2
EN 62061
ISO 13849-1
EN 954-1
IEC 60204-1

Table 42. Safety Standards.

The STO function has to be applied correctly to achieve the desired level of operational safety. Four different levels are allowed, depending on the use of the STO signals (see the following table).

STO inputs	STO feedback	Cat.	PL	SIL
Both dynamically used(*)	Used	4	e	3
Both statically used	Used	3	e	3
Connected in parallel	Used	2	d	2
Connected in parallel	Not used	1	c	1

Table 43. Four different STO levels. (*) see 9.5.1.

The same values are calculated for SIL and SIL CL. According to EN 60204-1, the emergency stop category is 0.

The SIL value for the safety related system, operating in high demand/continuous mode, is related to the probability of dangerous failure per hour (PFH), reported in the following table.

STO inputs	STO feedback	PFH	PFDav	MTTFd (years)	DCavg
Both dynamically used(*)	Used	1.2 E-09 1/h	1.0 E-04	>4274 y	HIGH
Both statically used	Used	1.2 E-09 1/h	1.1 E-04	>4274 y	MEDIUM
Connected in parallel	Used	1.2 E-09 1/h	1.1 E-04	>4274 y	MEDIUM
Connected in parallel	Not used	1.5 E-09 1/h	1.3 E-04	>4274 y	NONE

Table 44. SIL values. (*) see 9.5.1.

The STO inputs must always be supplied by a safety device.
The power supply of the safety device may be external or taken from the drive (as long as this is compliant with the rating specified for terminal 6).

9.4 The principle of STO

The STO functionality, such as the technical principles and data (wiring examples and commissioning) will be described in this chapter.

In VACON® 100 X, the STO function is realized by preventing the propagation of the control signals to the inverter circuit.

The inverter power stage is disabled through redundant disabling paths which start from the two separated and galvanically isolated STO inputs (S1-G1, S2-G2 in Figure 91). In addition, an isolated output feedback is generated to improve the diagnostics of the STO function and to achieve a better safety capability (F+, F- terminals). The values assumed by the STO output feedback are indicated in the following table:

STO inputs	Operating conditions	STO feedback output	Torque at the motor shaft
Both inputs energized with 24V DC	Normal operation	The feedback must be 0V	present (motor on)
Power removed from both inputs	STO demand	The feedback must be 24V	disabled (motor de-energized)
The STO inputs have different values	Failure in demand or due to internal fault	The feedback must be 0V	disabled (motor de-energized)(*)

Table 45. Values of the STO output feedback (and torque on the motor). (*) Only one channel is preventing the motor from moving.

The diagram below is a conceptual schematic diagram and is presented to illustrate the safety function with relevant safety components only shown.

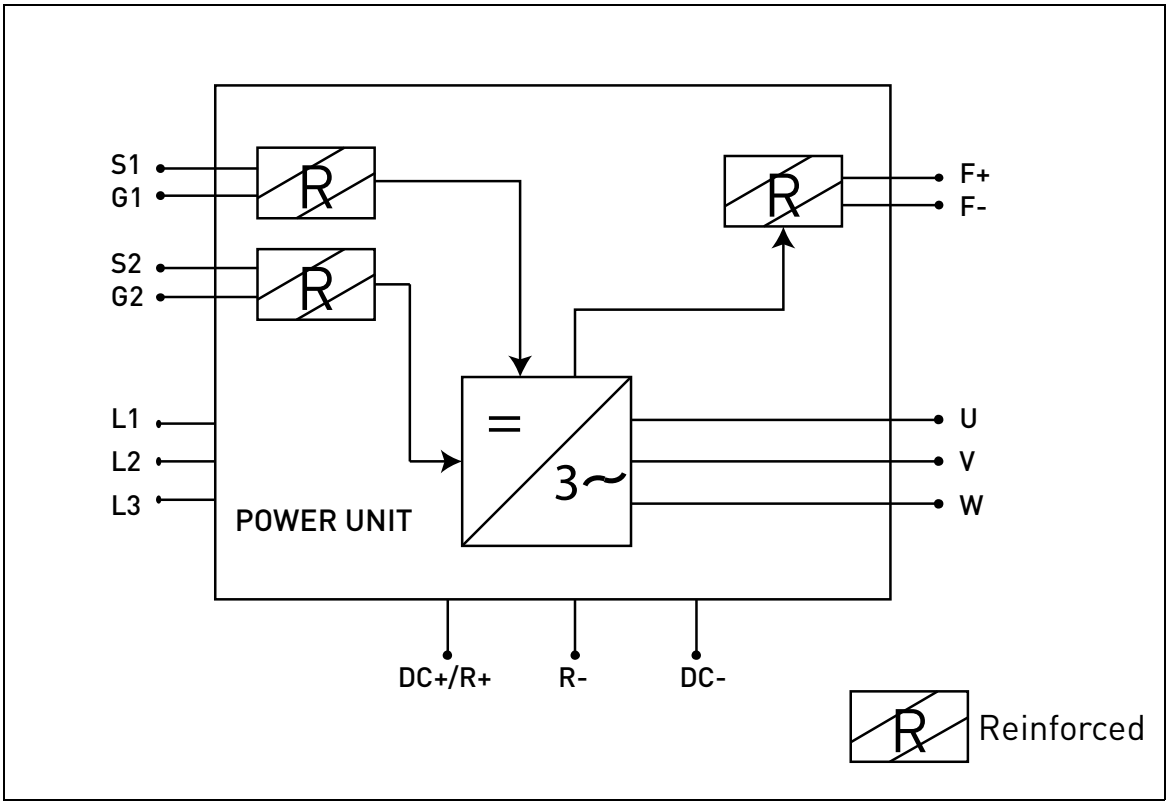

Figure 91. STO function principle.

9.4.1 TECHNICAL DETAILS

The STO inputs are digital inputs intended for a nominal 24V d.c. input, positive logic (e.g. enabled when high).

Technical information:	Technical values
Absolute maximum voltage range	24V ±20%
Typical input current at 24V	10...15 mA
Logic threshold	according to IEC 61131-2 15V....30V = "1" 0V....15V = "0"
Response time at nominal voltage:	
Reaction time	<20ms

Table 46. Electrical data.

The reaction time of the STO function is the amount of time which passes from the moment in which the STO is activated until the system is in the Safe State. For VACON® 100 X, the reaction time is 20 ms minimum.

9.5 CONNECTIONS

To make the STO function available and ready to be used, both the STO jumpers have to be removed. They are located in front of the STO inputs to mechanically prevent the insertion of the STO connector. For the correct configuration, see the following table and the Figure 92.

Signal	Terminal	Technical information	Data
STO1	S1	Insulated digital input 1 (interchangeable polarity)	24V ±20% 10...15 mA
	G1		
STO2	S2	Insulated digital input 2 (interchangeable polarity)	24V ±20% 10...15 mA
	G2		
STO feed-back	F+	Insulated digital output for STO feedback (CAUTION! Polarity must be respected)	24V ±20% 15 mA max.
	F-		GND

Table 47. STO connector and data signals.

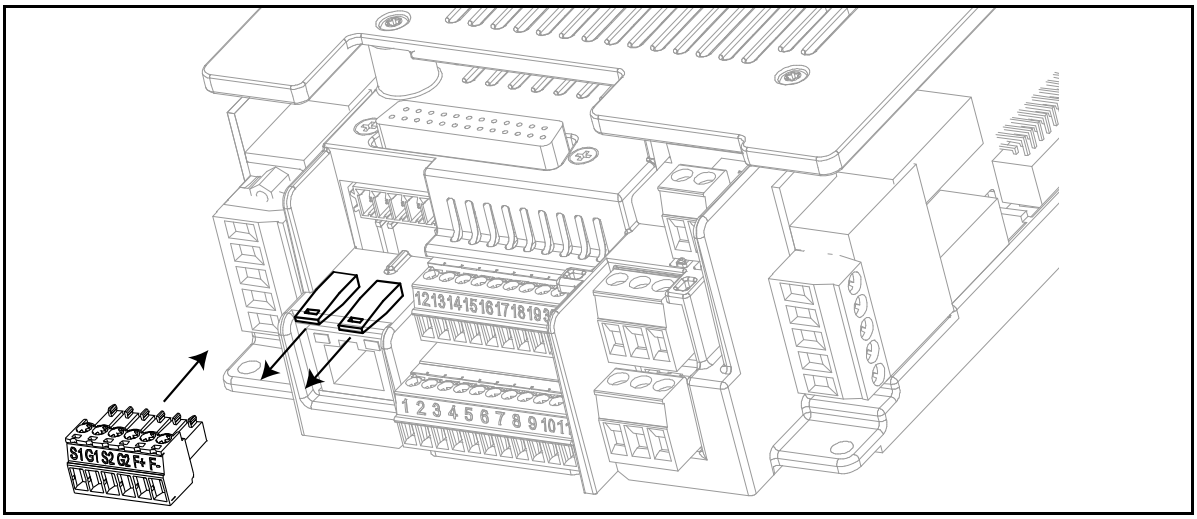

Figure 92. Removing the STO jumpers.

⚠	Make sure that the frequency converter is switched off before cabling.
⚠	Disconnect both the STO jumpers to allow the cabling of the terminals.
⚠	When the STO function is used, **the IP-class of the drive may not be reduced below IP54**. The IP-class of drive is IP66. It can be reduced by the wrong use of the cable entry plates or the cable glands.

The following examples show the basic principles for wiring the STO inputs and the STO output feedback. Local standards and regulations should be always followed in the final design.

9.5.1 SAFETY CAPABILITY CAT. 4 / PL e / SIL 3

For this safety capability, an external safety device must be installed. This must be used to dynamically activate the STO inputs and to monitor the STO output feedback.

The STO inputs are dynamically used when they do not commute together (static use), but according to the following picture (where the inputs are released with delay in turn). The dynamic use of the STO inputs allows detecting faults that may otherwise accumulate.

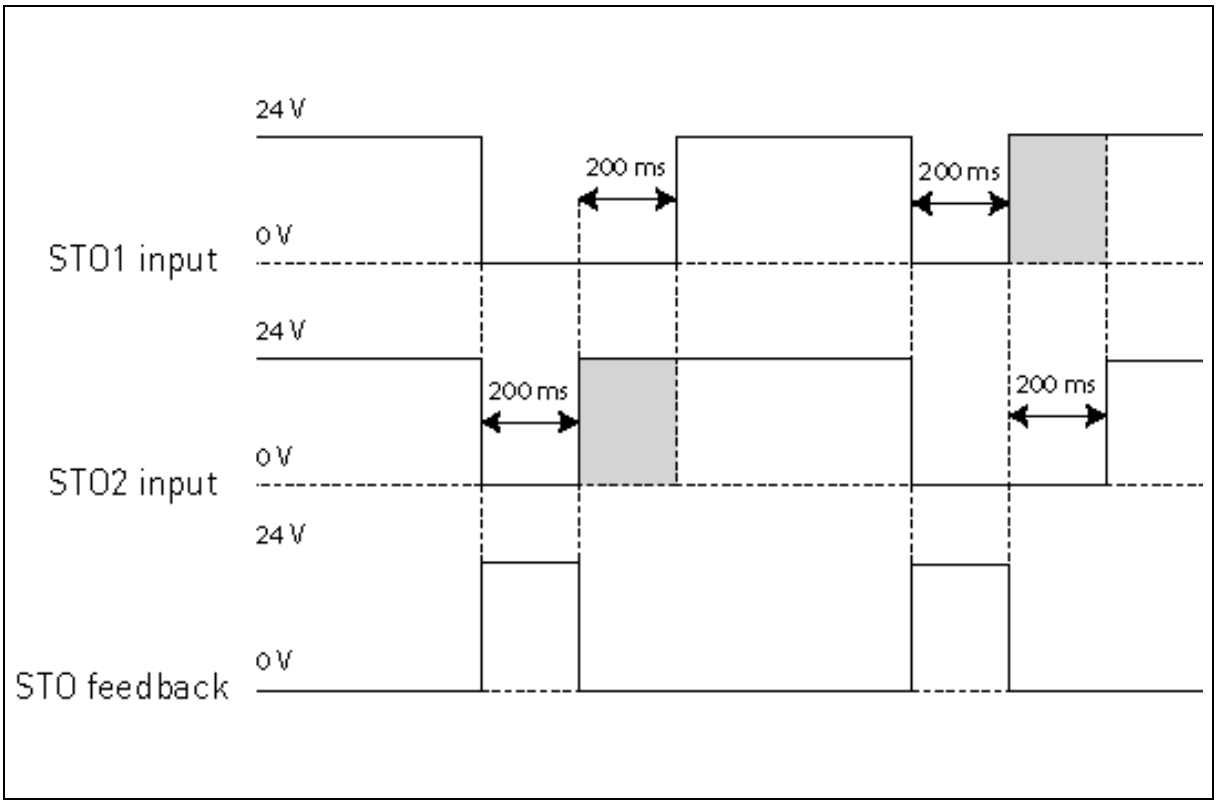

Figure 93.

	An emergency push button connected to the STO inputs does not assure the same quality, because no fault detection is performed at a sufficient frequency **(once a day is recommended)**.
	The external safety device, which forces the STO inputs and evaluates the STO output feedback, has to be a **safe device** and it has to fulfil the requirements of the specific application.
	A simple switch cannot be used in this case!

The picture below shows an example of connection for the STO function. The external device has to be connected with 6 wires to the drive.

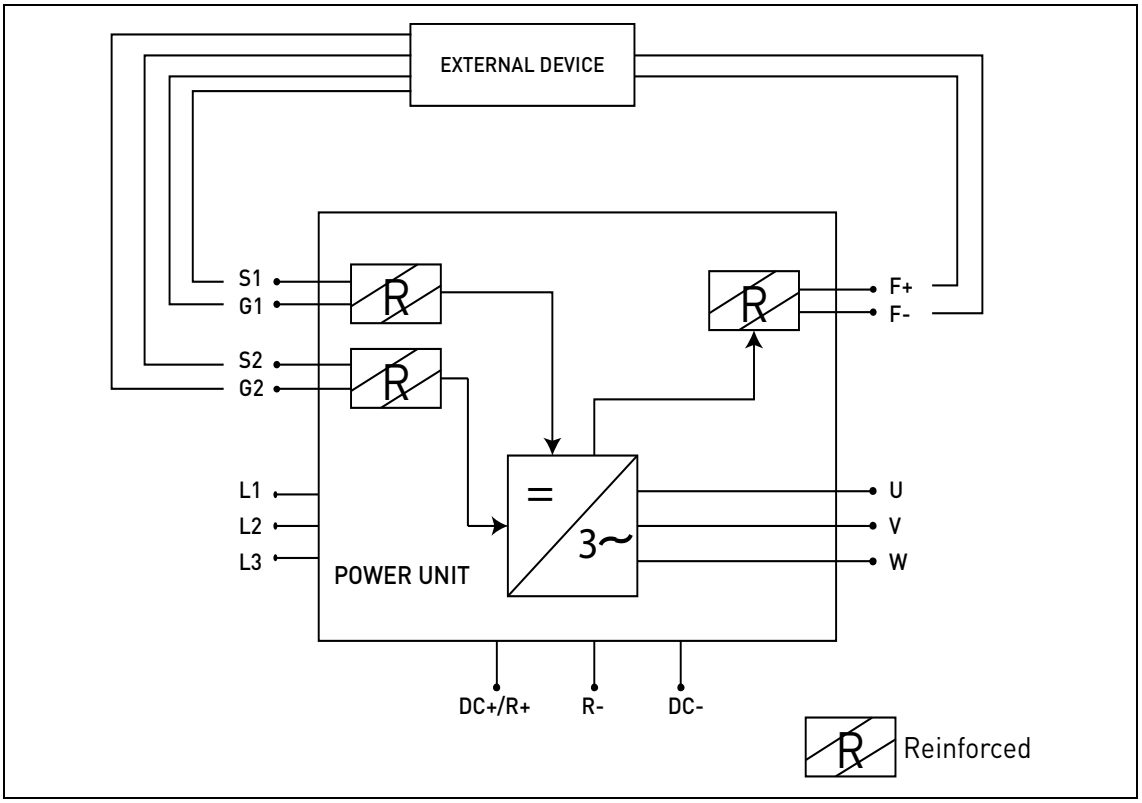

Figure 94. STO example with automatic monitoring of the feedback and both STO inputs used.

The external device has to monitor the STO function in accordance with theTable 45. The device has to periodically de-energize the STO inputs and it has to verify that the STO output feedback assumes the expected value.

Any difference between the expected and the real value has to be considered as a failure and has to drive the system into a Safe State. In case of failure, check the wiring. If the fault recognized by the external safety device persists, **the drive will have to be replaced/repaired**.

9.5.2 SAFETY CAPABILITY CAT. 3 / PL e / SIL 3

The safety capability is reduced to Cat. 3 / PL e / SIL 3 if the STO inputs are statically used (which means they are forced to commute together).

Both STO inputs and the STO feedback have to be used. The same warnings and cabling instruction as 9.5.1 apply.

9.5.3 SAFETY CAPABILITY CAT. 2 / PL d / SIL 2

The safety capability is reduced to Cat. 2 / PL d / SIL 2 if the STO inputs are connected in parallel (no redundancy of the STO inputs).

The STO feedback has to be used. The same warnings as 9.5.1 apply.The picture below shows an example of connection for the STO function. The external device has to be connected with 4 wires to the drive.

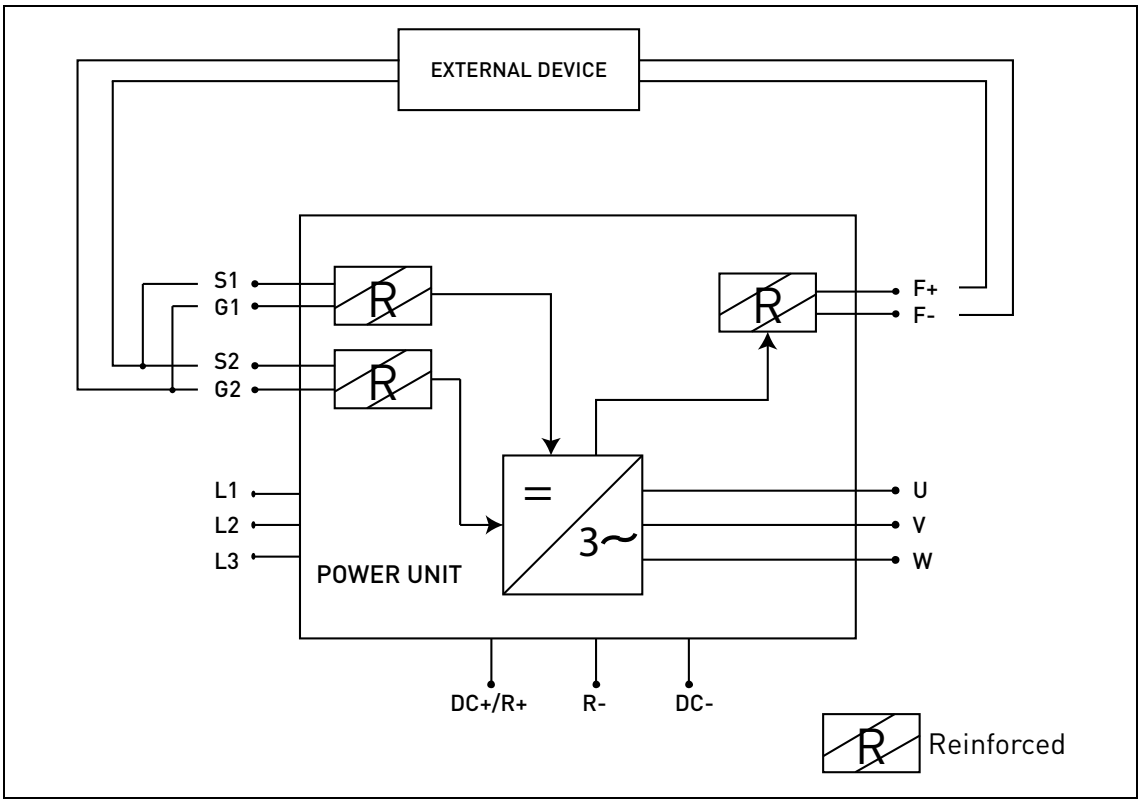

Figure 95. STO Example with automatic monitoring of the feedback and STO inputs connected in parallel.

9.5.4 Safety Capability Cat. 1 / PL c / SIL 1

Without any automatic monitoring of STO output feedback, the safety capability is reduced to Cat. 1 / PL c / SIL 1. The STO inputs (which can be connected in parallel) must be supplied by a safety push button or a safety relay.

⚠	The choice of using the STO inputs (without the automatic monitoring of the output feedback) does not allow **other safety capabilities to be achieved**.
⚠	The standards for functional safety require that functional proof tests are performed on the equipment at user-defined intervals. Therefore, **this safety capability** can be achieved, as long as the STO function is manually monitored at the frequency determined by the specific application **(once a month can be acceptable)**.
⚠	This **safety capability** can be achieved by connecting in parallel the STO inputs externally and by ignoring the use of the STO output feedback.

The picture below shows an example of connection for the STO function. A switch (a safety push button or a safety relay) may be connected with 2 wires to the drive.

When the contacts of the switch are opened, the STO is demanded, the drive indicates F30 (="Safe Torque Off") and the motor stops by coasting.

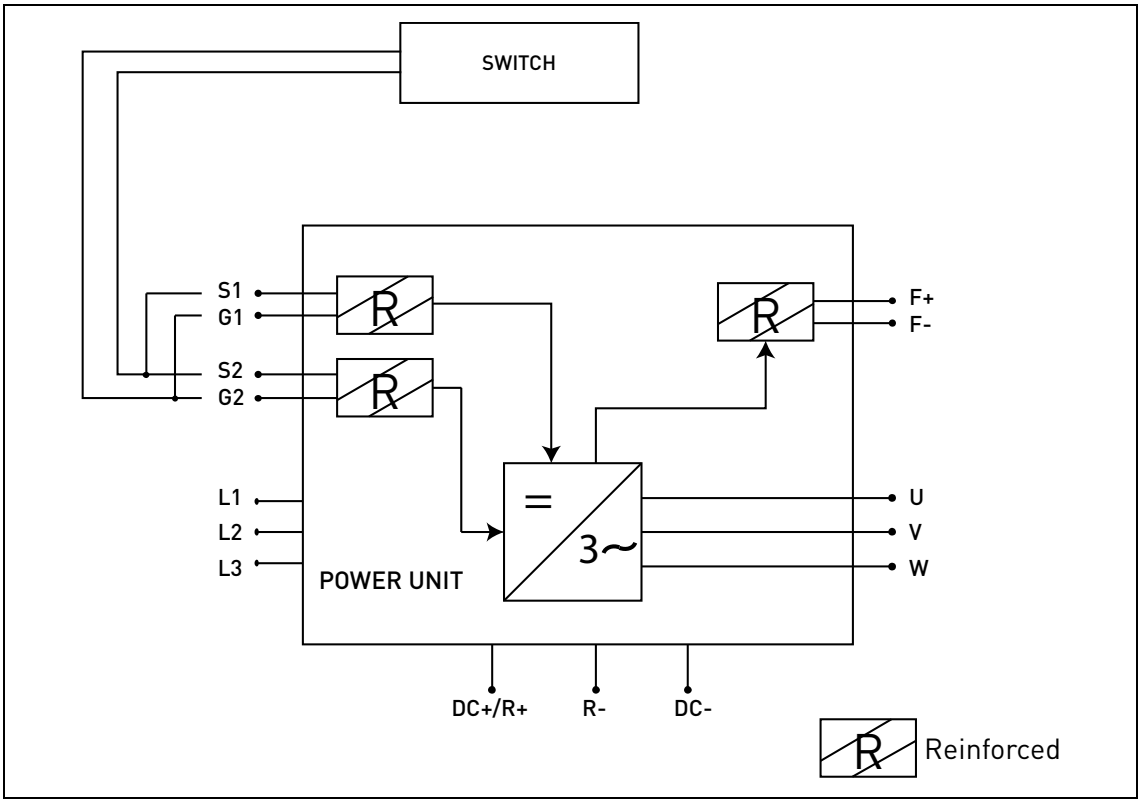

Figure 96. STO example without automatic monitoring of the feedback and STO inputs connected in parallel.

9.6 COMMISSIONING

9.6.1 GENERAL WIRING INSTRUCTIONS

⚠	Protect the STO cabling with a shielding or an enclosure to exclude external damage.
⚠	Wires ferrules are highly recommended for all STO signals (inputs and feedback).

The wiring should be done according to the general wiring instructions for the specific product. A shielded cable is required. In addition, the voltage drop from the supply point to the load shall not exceed 5% [EN 60204-1 part 12.5].

The following table indicates examples of cables to be used.

STO feedback	Cable size
STO feedback automatically monitored by an external safety device	3 x (2 + 1) x 0,5 mm^2(*)
STO feedback ignored, simply safety device (switch) used	2 x (2 + 1) x 0,5 mm^2

Table 48. Cable types required to meet the standards. (*) Additional wires are needed for restarting the drive after each STO demand.

9.6.2 CHECKLIST FOR COMMISSIONING

Follow the checklist shown in the table below for the steps required to use the STO function.

☐	Carry out a risk assessment of the system to ensure that the use of the STO function is safe and according to the local regulations
☐	Include in the assessment an examination of whether the use of external devices, such as a mechanical brake, are required.
☐	Check if the switch (if used) has been chosen according to the required safety performance target (SIL/PL/Category) set during the risk evaluation
☐	Check if the external device for automatic monitoring of the STO output feedback (if used) has been chosen in accordance with the specific application
☐	Check if the reset function with the STO function (if used) is edge sensitive.
☐	The shaft of a permanent magnet motor might, in an IGBT fault situation, still provide energy before the torque production ceases. This may result in a jerk of max. 180° electrically. Ensured that the system is designed in such a way that this can be accepted.
☐	Check if the degree of protection of the **enclosure is at least IP54.** See paragraph 9.5.
☐	Check if the recommendations on EMC for cables have been followed.
☐	Check if the system has been designed in such a way that enabling of the drive through STO inputs will not lead to an unexpected start of the drive.
☐	Check if only approved units and parts have been used.
☐	Set up a routine to ensure that the functionality of the STO function is being checked at regular intervals.

Table 49. Checklist for commissioning of STO.

9.7 PARAMETERS AND FAULT TRACING

There are no parameters for the STO function itself.

	Before testing the STO function, make sure that the checklist (Table 49) is inspected and completed.
	When STO function activates, the drive always generates a fault ("F30") and the motor stops by coasting.
	In the application the STO state can be indicated using a digital output.

To re-enable motor operation, after the STO state, it is necessary to perform the following steps:

- Release the switch or the external device ("F30" is displayed even after this has been released).
- Reset the fault (through a digital input or from the keypad).
- It is possible that a new start command is required for the restart (depending on the application and your parameter settings).

9.8 MAINTENANCE AND DIAGNOSTICS

	If any service or repair is to be conducted on the drive installed, please inspect the checklist given in Table 49
	During maintenance breaks, or in case of service/repair, **ALWAYS** make sure that the STO function is available and fully functional by testing it.

The STO function or the STO input/output terminals do not need any maintenance.

The following table shows faults that may be generated by the software that monitors the hardware related to the STO safety function. If you detect any failure in safety functions, including STO, contact your local VACON® supplier.

Fault Code	Fault	Cause	Correction
30	Safe Torque Off	STO inputs in a different state or both de-energized	Check cabling

Table 50. Fault related to the STO function.

VACON®

DRIVEN BY DRIVES

Find your nearest Vacon office
on the Internet at:

www.vacon.com

Document ID:

DPD00534

Order code:

DOC-INS03985+DLUK

Rev.H

Manual authoring:
documentation@vacon.com

Vacon Plc.
Runsorintie 7
65380 Vaasa
Finland

Subject to change without prior notice
© 2015 Vacon Plc.